FORM NO. 95-2454

TORO®

MODEL NO. 41552-60101 & UP

OPERATOR'S MANUAL

PA-17 SPREADER &MOUNTING KIT
for use on the MULTI-PRO® 5500

To assure maximum safety, optimum performance, and to gain knowledge of the product, it is essential that you or any other operator of this equipment read and understand the contents of this manual before the vehicle engine is ever started. Pay particular attention to the SAFETY INSTRUCTIONS highlighted by this symbol—

⚠ The safety alert symbol means CAUTION, WARNING, or DANGER — personal safety instruction. Failure to comply with the instruction may result in personal injury.

⚠ SAFETY INSTRUCTIONS

It is very important that all persons operating this equipment have easy access to these instructions at all times!

RECOGNIZE SAFETY INFORMATION

⚠ This safety-alert symbol is used to call attention to a **dangerous** situation, which could result in serious injury or death to the operator or bystander.
Safety, mechanical and some general information in this manual are emphasized. **DANGER, WARNING** and **CAUTION** identify safety messages. Whenever the triangle safety appears, it is followed by a safety message that must be read and understood. For more details concerning safety, read the Safety Instructions on pages 1 and 2. **IMPORTANT** identifies special mechanical information and **NOTE** identifies general information worthy of special attention.

These instructions are provided as a guide for the safe operation and maintenance of this equipment. However, the operator's personal safety, as well as those persons in the work area, will depend on the careful actions and good judgement of the operator.

To reduce the potential for injury or death, comply with the following safety instructions.
BEFORE OPERATING:

1. Operate this machine only after reading and understanding the contents of this manual. A replacement manual is available by sending complete model and serial number to Hahn Equipment Co., a subsidiary of the TORO Company 1625 N. Garvin, Evansville, IN 47711.

2. Learn how to operate the Spreader and how to use the controls properly. DO NOT let anyone operate this equipment without first receiving thorough instructions.

3. Keep all shields, safety devices and decals in place. If a shield, safety device or decal is malfunctioning, illegible or damaged, repair or replace it before operating the machine.

4. Since gasoline is highly flammable, handle it carefully.

5. DO NOT OVERLOAD THE SPREADER. Maximum load limits are shown on the decals...do not exceed these limits. Failure to position loads carefully can result in their shifting or tipping over. Distribute loads evenly, keeping them low as possible to prevent the Spreader from becoming top-heavy.

6. Make certain everyone is clear of the machine before starting the engine to move the Vehicle or to engage the Spreader drive.

7. If equipment begins to vibrate abnormally, stop **immediately.** Shut off the Vehicle engine and disengage all power. Repair all damage before commencing operation.

©The TORO Company - 1997
All Rights Reserved

⚠ SAFETY INSTRUCTIONS

MAINTENANCE:

8. **Before** servicing or making any adjustments to the Spreader:

A. Stop the vehicle and set the parking brake.

B. Disengage all power and wait until all moving parts have stopped.

C. Keep hands, feet and clothing away from all power driven parts.

9. Keep all nuts, bolts and other fasteners tightened securely. Replace any shields removed during servicing or adjustments.

10. To be sure of optimum performance and safety, always purchase genuine TORO replacement parts and accessories. Replacement parts and accessories made by other manufacturers could be dangerous. Altering this equipment in any manner may affect the machine's operation, performance, durability or its use may result in injury or death. Such use could void the product warranty of the TORO Company.

⚠ SAFETY INSTRUCTIONS

The following safety and instruction decals are installed on the PA-17 Spreader. If any become damaged or illegible, replace them. Decals and part numbers are listed below and in the parts catalog. Order replacements from your Authorized Toro Distributor.



Part No. 87-0470; Located at back of Hopper.

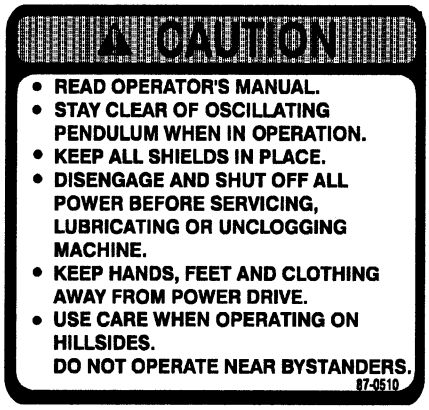

Part No. 87-0510; Located on Gear Box Cover.



Part No. 87-0560; Located at front of Hopper.



Part No. 67-7320; Located on each side of Frame

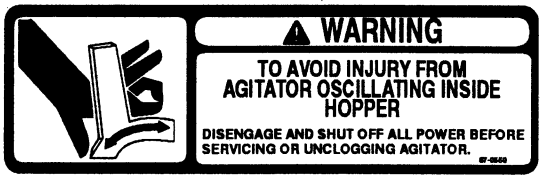

Part No. 87-0550; Located on easch side of Hopper.

CONTROLS

FLOW CONTROL HANDLE: Opens and closes the regulator disc in the Hopper opening, to start or stop the flow of material. Pull the Handle forward, toward the operator, to open the regulator disc. Push the Handle back, away from the operator, to close the regulator disc.

FLOW REGULATOR: Determines the rate at which the material flows from the Hopper. The highest number setting (7) on the Regulator Scale, indicates the largest opening, for maximum flow of material. The lowest number setting (1) indicates the smallest opening, for a minimum flow of material. At (0) the disc is closed.

Note the Stop Pin which is chained to the Flow Regulator and the Calibration Spacer stored in the Regulator Handle. See FIG. 2.

a. The Stop Pin is used to stop the Flow Regulator Handle at a selected position.

b. The Calibration Spacer is used to stop the Regulator at a position **between** the positions allowed with the Stop Pin.

FIG. 2

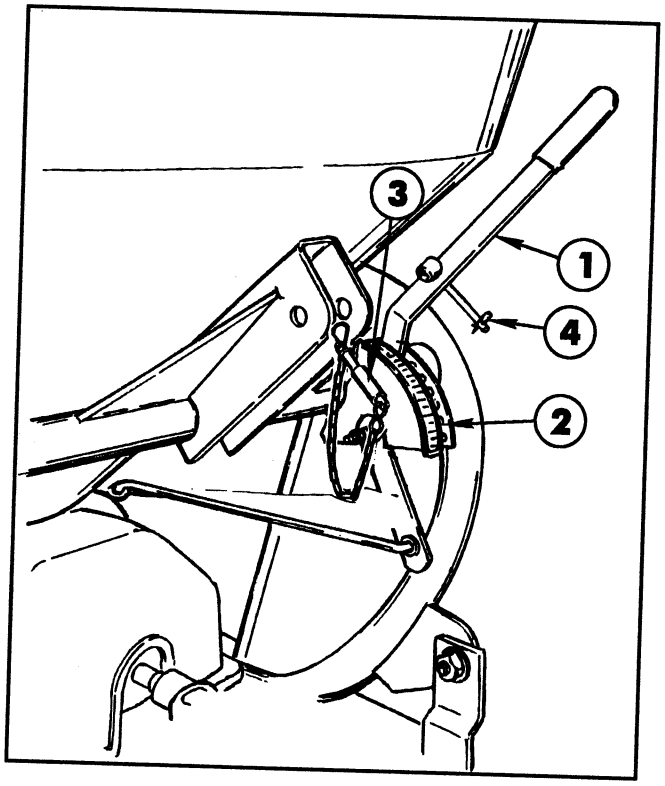

1. Flow Control Handle
2. Regulator Scale
3. Stop Pin
4. Calibration Spacer

NOTE: Flow Control Handle is used as an indicator on the Regulator Scale to denote the rate of material flow. See FIG. 3.

See the chart on page 5 for suggested settings based on material being applied.

a. Position the front edge of the Flow Regulator Handle at the desired setting.

b. Insert the Stop Pin through the holes in the Flow Regulator that will stop the Flow Handle at the desired setting when it is pulled forward to open the regulator disc in the Hopper. See FIG. 3.

To stop the Flow Handle at a setting **between** the numbers shown on the Regulator:

a. Remove the top Pin and insert the Calibration Spacer between the two Regulator adjustment plates at the holes selected.

b. Insert the Stop Pin and insert the Spacer between the plates.

CONTROLS

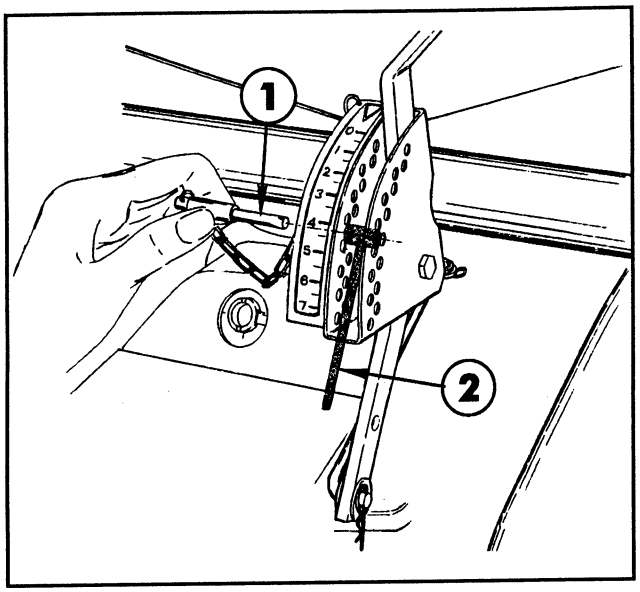

FIG. 3

1. Stop Pin
2. Calibration Spacer

DANGER

ROTATING MEMBERS CAN CAUSE SERIOUS INJURY!

Before making any adjustments or repairs on the Spreader:

- **Stop the Vehicle and set the Parking Brake.**
- **Shut off the Vehicle's engine and remove the Ignition Key.**
- **Pull the Directional Control Valve DOWN to disengage the Spreader drive.**

SPOUT ARC SETTING:

The embossed plus "+" and minus "-" signs on the Spreader housing, indicate the operating arc of the Spreader Spout.

(-) or MIN = A Spout arc of 38 degrees
(+) or MAX = A Spout arc of 58 degrees

Adjust the arc of the Spout action as follows:

1. Turn the Spreader Sprocket by hand, until the arc adjuster appears in the opening in the Spreader, as shown in FIG. 4.

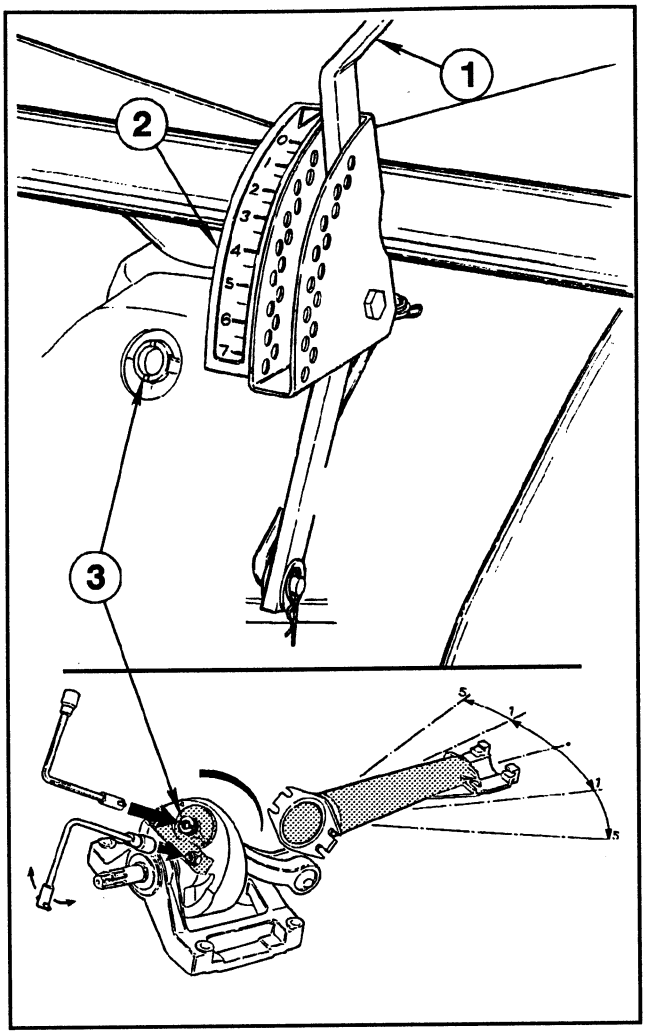

FIG. 4

1. Flow Control Handle
2. Flow Regulator Scale
3. Spout Arc Adjustment

2. Using the wrench furnished, loosen the two locking nuts on each side of the arc adjuster.

3. Insert the opposite end of the wrench into the opening and turn the adjuster to the desired spreading width.

4. Re-tighten the locking nuts.

The table below gives some suggested spread widths and Spout arc settings for a variety of materials.

IMPORTANT! When spreading sand, the spout arc must be at the **(-)** or **MIN** setting.

MATERIAL	SPREAD WIDTH	SPOUT ARC
Granulated	40 ft. (12 m)	+ (Max)
Prilled	40 ft. (12 m)	+ (Max)
Powder	20 ft. (6 m)	(Midway)
Urea	32 ft. (10 m)	+ (Max)

CONTROLS

SPREADER CALIBRATION

To calibrate the TORO Spreader you must determine the desired rate of flow for the material being applied (in pounds per acre), as specified by the material's manufacturer.

To achieve this application rate, first establish the following:

1. The spread width in feet, for the material being applied. **NOTE:** This width will vary depending on the density of the material and the Spout arc setting.

2. Flow rate of material from the Hopper, in pounds per acre. This will depend on the particle size of the material and the position of the Flow Regulator setting.

3. The desired working speed of the transport vehicle, in miles per hour.

⚠ WARNING

Tipping or rolling the vehicle can cause serious personal injury or death. Driving too fast for the conditions can cause you to lose control and result in an accident.

After determining the factors listed above, use the following formula to calculate the application rate for the Flow Regulator setting being used.

$$\frac{\text{lbs./min. x 495}}{\text{spread width (ft) x mph}} = \text{lbs./acre}$$

EXAMPLE: With a flow rate of 106 lbs./min, a spread width of 50 feet and a ground speed of 3.5 mph...the Spreader application is:

$$\frac{\text{106 lbs./min. x 495}}{\text{50 feet x 3.5 mph}} = \text{300 lbs./acre}$$

See the Flow Regulator Setting Chart

The Spreader Unit can be fitted with two different Spouts. The smaller metal Spout is recommended for the spreading of sand. The longer nylon Spout is recommended for the spreading of fertilizer.

The Agitator is recommended for the spreading of sand or fertilizers that do not easily flow through the Regulating Disc. Use of the Agitator with granular or prilled fertilizer may pulverize the material.

USE THE FOLLOWING CHART AS A GUIDELINE ONLY, TO DETERMINE A FLOW REGULATOR SETTING TO APPROXIMATE THE APPLICATION RATE DESIRED. Due to weather conditions and variances in denity, moisture content and particle size...flow rate will not always be the same as those shown. Use the chart to establish a Flow Regulator setting to use as a starting point for actual calibration.

Fertilizer Type	PTO SPEED (RPM)	SPREADING WIDTH (IN FEET)	MPH	APPROXIMATE APPLICATION RATE IN LBS. PER ACRE						
				FLOW REGULATOR SETTING						
				1	2	3	4	5	6	7
COARSE GRAIN	540	60	2.5	43	195	490	872	1336	1778	2168
			3.5	29	130	326	581	889	1185	1446
			5	21	97	245	436	668	889	1084
			6	17	78	196	349	533	710	866
			7.5	14	64	162	290	445	592	723
MEDIUM GRAIN	540	50	2.5	48	227	570	992	1459	1959	2496
			3.5	32	152	379	662	972	1306	1664
			5	24	113	284	496	729	980	1247
			6	19	91	227	388	583	783	998
			7.5	16	76	189	330	486	592	723
FINE GRAIN	540	40	2.5	57	336	735	1211	1745	2279	2738
			3.5	38	223	490	807	1164	1519	1825
			5	29	168	368	601	872	1140	1369
			6	22	134	294	483	697	912	1096
			7.5	19	112	245	403	581	759	913

OPERATING INSTRUCTIONS

Refer to the charts on page 5 as guidelines to determine the Spout Arc and Flow Regulator settings to achieve the desired rate of application for the material being used.

1. Position the Stop Pin (and Calibration Spacer if necessary) to stop the Flow Control Handle at the desired setting on the Regulator Scale, as described on page 3.

2. Choose the appropriate Spreader Spout and position the Arc Adjuster as needed for the application rate required, as described on page 5.

3. **CLOSE** the regulator disc, by positioning the Flow Control Handle at "0".

4. Take the machine to the work site and shut off the engine and engage the parking brake.

5. Just prior to the actual spreading operation...fill the Hopper.

⚠ DANGER

AN OVERLOADED SPREADER CAN CAUSE A TIPOVER RESULTING IN SERIOUS INJURY OR DEATH.

- **Do not exceed the load capacity of 1000 lbs. (450 kilograms) shown on the decal at the rear of the hopper.**
- **Do not exceed the load level shown on the decal at the rear of the hopper.**
- **Distribute the weight of the load evenly from front to rear and from side to side.**

6. Start the engine and use the Pump Switch to **engage** the Spreader drive.

7. As the Vehicle begins to move, pull the Control Handle **FORWARD** to **open** the regulator disc.

NOTE: The TORO Spreader is designed to operate most effectively with the engine at full or nearly full RPM.

IMPORTANT! **Always CLOSE the regulator disc when the Vehicle is stopped. Disengage the Agitator and Spreader Spout mechanism when the disc is to be closed for any length of time, to prevent the pulverizing of the material in the Hopper.**

8. Maintain the forward speed of the Multi-Pro vehicle and the working width used in the calibration of the Spreader.

WHEN JOB IS COMPLETED:

1. CLOSE regulator disc, using the Flow Control Handle.

2. Operate the Spreader drive SLOWLY, while spraying water inside the Hopper.

3. OPEN the regulator disc and spray the agitator and regulating plate.

4. Spray all of the outside surfaces of the Spreader.

MAINTENANCE:

AFTER THE INITIAL RUN-IN PERIOD (APPROXIMATELY 5 HOURS):

1. Remove the Drive Cover.

2. Grease the fittings in the "U"-Joint Assembly. Grease after every 250 hours thereafter. See

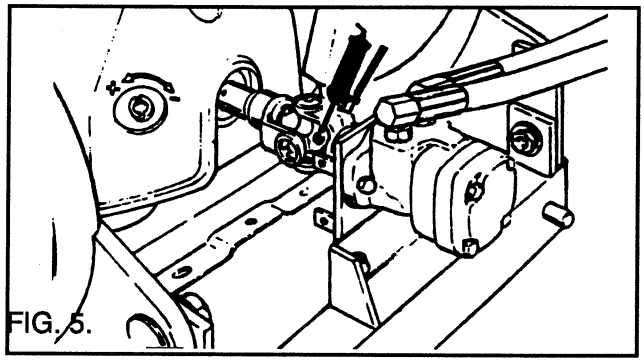

FIG. 5

FIG. 5

3. Grease the Zerk fitting in the underside of input shaft hub.

4. Replace Drive Cover.

AFTER EVERY 10 HOURS OF OPERATION:

Use a hand grease gun with a good grade of general purpose grease to lubricate through the

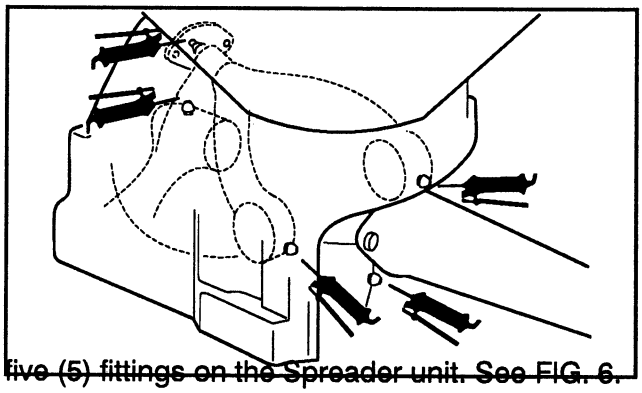

five (5) fittings on the Spreader unit. See FIG. 6.

FIG. 6

NOTES:

The Toro Promise
A One Year Limited Warranty

The Toro Company promises to repair your Model 41150 PA-17 Spreader and Model 41552 Mounting Kit for the Multi-pro® 5500 Vehicle if defective in materials or workmanship. The following time periods from the date of purchase apply special warranty terms, on certain components, may be offered through The Toro Company by the component manufacturers:

Commercial Products.....1 Year

The cost of parts, labor and transportation are included.

If you feel your TORO Product is defective and wish to rely on The Toro Promise, the following procedure is recommended:

1. Contact your Authorized TORO Distributor or Commercial Dealer (the Yellow Pages of your telephone directory is a good reference source).

2. The TORO Distributor or Commercial Dealer will advise you on the arrangements that can be made to inspect and repair your product.

3. The TORO Distributor or Commercial Dealer will inspect the product and advise you whether the product is defective and, if so, make all repairs necessary to correct the defect without an extra charge to you.

If for any reason you are dissatisfied with the distributor's analysis of the defect or the service performed, you may contact us.

Write:

TORO Commercial Products Service Department
8111 Lyndale Avenue South
Bloomington, MN 55420-1196

The above remedy of product defects through repair by an Authorized TORO Distributor or Commercial Dealer is the purchaser's sole remedy for any defect.

THERE IS NO OTHER EXPRESS WARRANTY. ALL IMPLIED WARRANTIES OF MERCHANTABILITY AND FITNESS FOR USE ARE LIMITED TO THE DURATION OF THE EXPRESS WARRANTY.

Some states do not allow limitations on how long an implied warranty lasts, so the above limitation may not apply to you.

This Warranty applies only to parts or components which are defective and does not cover repairs necessary due to normal wear, misuse, accidents, or lack of proper maintenance. Regular, routine maintenance of the unit to keep it in proper operating condition is the responsibility of the owner.

All warranty repairs reimbursable under The Toro Promise must be performed by an Authorized Toro Commercial Dealer or Distributor using Toro approved replacement parts.

Repairs or attempted repairs by anyone other than an Authorized TORO Distributor or Commercial Dealer are not reimbursable under The TORO Promise. In addition, these unauthorized repair attempts may result in additional malfunctions, the correction of which is not covered by warranty.

THE TORO COMPANY IS NOT LIABLE FOR INDIRECT, INCIDENTAL OR CONSEQUENTIAL DAMAGES IN CONNECTION WITH THE USE OF THE PRODUCT INCLUDING ANY COST OR EXPENSE OF PROVIDING SUBSTITUTE EQUIPMENT OR SERVICE DURING PERIODS OF MALFUNCTION OR NON-USE.

Some states do not allow the exclusion of incidental or consequential damages, so the above exclusion may not apply to you.

This warranty gives you specific legal rights, and you may also have other rights which vary from state to state.

COUNTRIES OTHER THAN THE UNITED STATES OR CANADA

Customers who have purchased TORO products exported from the United States or Canada should contact their TORO Distributor (Dealer) to obtain guarantee policies for your country, province, or state. If for any reason you are dissatisfied with your Distributor's service or have difficulty obtaining guarantee information, contact the TORO importer. If all other remedies fail, you may contact us at The Toro Company.

Compliance with Radio Interference Regulations Certified.