FORM NO. 95-9300

TORO®

Model No. 41080-80001 & UP
Model No. 41021-80001 & UP
Model No. 41031-80001 & UP
Model No. 41220-80001 & UP
Model No. 41223-80001 & UP
Model No. 41230-80001 & UP

OPERATOR'S INSTRUCTIONS

PRO CONTROL™ SPRAY SYSTEM
for the WORKMAN® Vehicle

To assure maximum safety, optimum performance, and to gain knowledge of the product, it is essential that you or any other operator of this Vehicle read and understand the contents of this manual and the vehicle's manuals before the engine is ever started. Pay particular attention to the SAFETY INSTRUCTIONS highlighted by the triangular safety alert symbol.

The safety alert symbol means CAUTION, WARNING or DANGER - personal safety instruction. Failure to comply with the instruction may result in personal injury.

SAFETY INSTRUCTIONS

Keep this and all Operator's Manuals in the plastic tube behind the operator seat.

It is very important that all persons operating this equipment have easy access to these instructions at all times!

Carefully read and follow the "Set-Up" Instructions that are provided with this equipment and the Safety Instructions in the WORKMAN® Operator's Manual.

RECOGNIZE SAFETY INFORMATION

This safety-alert symbol is used to call attention to a **dangerous** situation, which could result in serious injury or death to the operator or a bystander.

Safety, mechanical and some general information in this manual are emphasized. **DANGER, WARNING** and **CAUTION** identify safety messages. Whenever the triangular safety symbol appears, it is followed by a safety message that must be read and understood. For more details concerning safety, read the Safety Instructions on this page and page 2. **IMPORTANT** identifies special mechanical information and **NOTE** identifies general information worthy of special attention.

These instructions are provided as a guide for the safe operation and maintenance of this equipment. However, the operator's personal safety, as well as those persons in the work area, will depend on the careful actions and good judgement of the operator. **To reduce the potential for injury or death, comply with the following safety instructions.**

BEFORE OPERATING:

1. Operate this machine only after reading and understanding the contents of this manual. A replacement manual is available by sending complete model and serial number to: Hahn Equipment Co., 1625 N. Garvin, Evansville, IN 47711.

2. Learn how to operate the Sprayer and how to use the controls properly. DO NOT let anyone operate this equipment without first receiving thorough instructions.

3. Keep all shields, safety devices and decals in place. If a shield, safety device or decal is malfunctioning, illegible or damaged, repair or replace it before operating the machine.

4. Chemicals can injure persons, animals, plants, soils or other property. To eliminate environmental damage and personal injury:

A. Select the proper chemical for the job.

B. Follow manufacturer's instructions on chemical container labels. Apply and handle chemicals as recommended.

C. Handle and apply chemicals with care. Wear goggles and other necessary protective equipment. Handle chemicals in well ventilated areas. Never smoke while handling chemicals.

D. Properly dispose of chemical container and unused chemicals.

©The TORO Company - 1998
All Rights Reserved

⚠ SAFETY INSTRUCTIONS

WHILE OPERATING:

5. Drive the Vehicle safely.

A. Always SLOW the Vehicle when aproaching and while making a turn.

B. Always SLOW the Vehicle when driving in unfamiliar areas or over rough terrain.

C. Always SLOW the Vehicle when changing the direction of travel or preparing to stop.

D. When turning or driving on slopes, always SLOW the Vehicle, then turn the vehicle to prevent loss of control and possible upset.

E. DO NOT make sudden or sharp turns. DO NOT suddenly change direction of travel on an incline, ramp, grade, slope or similar surface.

F. Always adjust the vehicle speed to allow for existing conditions such as wet, slick surfaces, low visibility, etc.

G. Be especially careful when driving a heavily loaded vehicle down an incline or slope. Drive the vehicle UP and DOWN the face of the slopes, inclines or grades whenever possible. DO NOT DRIVE ACROSS the face if at all possible. There is a risk of upsetting the vehicle, which can result in serious injury or death.

6. DO NOT OVERLOAD THE VEHICLE. Failure to position loads carefully can result in their shifting or tipping over. Distribute loads evenly, keeping them as low as possible to prevent them from becoming top-heavy.

7. Make certain everyone is clear of the machine before starting the engine to move the vehicle or to engage the Sprayer Pump drive.

8. Before backing up, look to the rear and assure no one is behind. Back up **slowly.**

9. Watch out for traffic when near or crossing roads. Always yield the right of way to pedestrians and other vehicles.

10. If equipment begins to vibrate abnormally, stop **immediately.** Shut off the vehicle engine and disengage all power. Repair all damage before commencing operation.

MAINTENANCE:

11. Before servicing or making any adjustments to the Sprayer:

A. Stop the Vehicle and set the parking brake.

B. Shut off the vehicle's engine and remove key from ignition.

C. Disengage all power and wait until all moving parts have stopped.

12. Keep all nuts, bolts and other fasteners tightened securely. Replace any shields removed during servicing or adjustments.

13. To be sure of optimum performance and safety, always purchase genuine TORO replacement parts and accessories. Replacement parts and accessories made by other manufacturers could be dangerous. Altering this equipment in any manner may affect the machine's operation, performance, durability or its use may result in injury or death. Such use could void the product warranty of the TORO Company.

SAFETY & INSTRUCTION DECALS

The following safety and instruction decals are installed on the PRO CONTROL™. If any become damaged or illegible, replace them. Decals and part numbers are listed below and in the parts catalog. Order replacements from your Authorized Toro Distributor.



Part No. 75-5190: Located on Radiator Cover top, front & rear (2).



Part No. 92-2663: Located at Fuse Block (1).

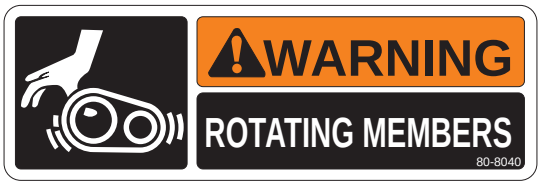

Part No. 80-8040: Located on Radiator Cover top, front & rear (2).



Part No. 87-0570: Located on rear Tank Band (2).



Part No. 36-3400: Located on Radiator Cover top sides (2).



Part No. 92-2669: Located on Tank Skid - left side @ strut (1).



Part No. 93-0688: Located on Tank Lid (1).



Part No. 62-5550: Located on Tank sides (2).

INTRODUCTION

The Toro Pro-Control™ Spray System is designed to improve the accuracy and uniformity of spray applications. Its performance relies on the installation and preventive maintenance of the complete Sprayer. This Manual provides a simple step-by-step procedure for installing and operating the Toro Pro-Control™ Spray System.

The Toro Pro-Control™ System consists of a computer based Control Console, a Speed Sensor, Turbine Type Flow Meter and a Motorized Control Valve. The Speed Sensor is mounted on the left rear wheel of the Vehicle. Appropriate cabling is furnished for installation.

The operator sets the target volume per area to be sprayed and the Control Console automatically maintains the flow regardless of vehicle speed or gear selection. A manual override switch allows the operator to manually control flow for system check out spot spraying. Actual volume per area being applied is displayed at all times. The Pro-Control additionally functions as an area monitor, speed monitor and volume totalizer.

CONTROLS

NOTE: "Right", "Left", "Front" and "Rear" are referenced while seated in the operator's position.

ELECTRIC CLUTCH/PUMP SWITCH: This switch located on the lower dash panel, when moved to the "ON" position, engages the pump drive belt. Move the switch to the "OFF" position to disengage the pump drive belt. See FIG. 1.

CONSOLE COMPUTER: Receives data for desired rate of application and automatically maintains that rate, regardless of vehicle speed. See FIG. 1.

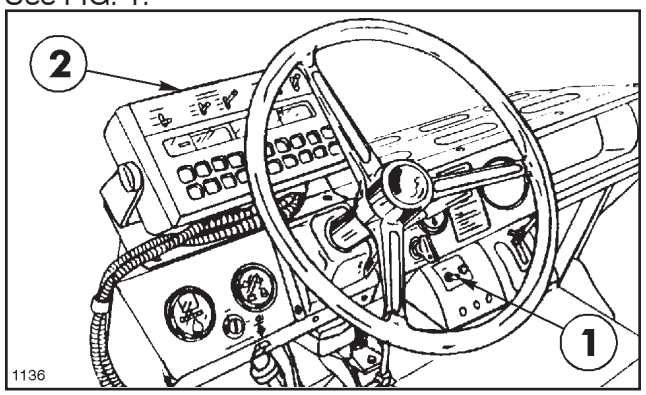

FIG. 1

1. Electric Clutch/Pump Switch
2. Console Computer

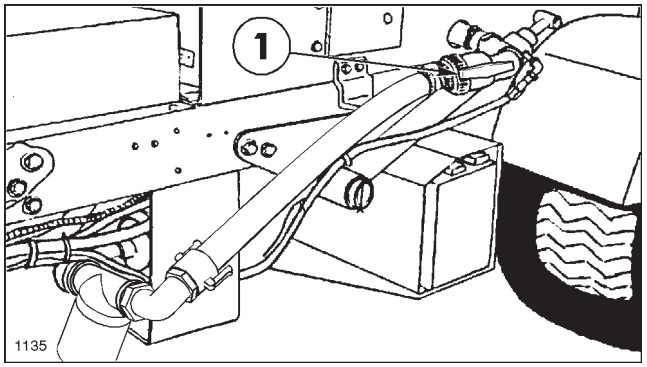

FIG. 2

1. Suction Valve Handle (open)

SUCTION VALVE HANDLE: Opens and closes the Suction Line Valve. Close during maintenance to the Suction Line Strainer or Centrifugal Pump. See FIG. 2.

IMPORTANT! The Pump will be damaged if it is activated with the Suction Line Valve closed, or before the tank contains enough liquid to flood the pump.

JET AGITATOR VALVE HANDLE: Opens and closes the Agitator Valve to activate, adjust or stop the agitation of the spray solution in the Tank. See FIG. 3.

BY-PASS VALVE HANDLE: Use to adjust and maintain the maximum pressure in the spraying system. See FIG. 3.

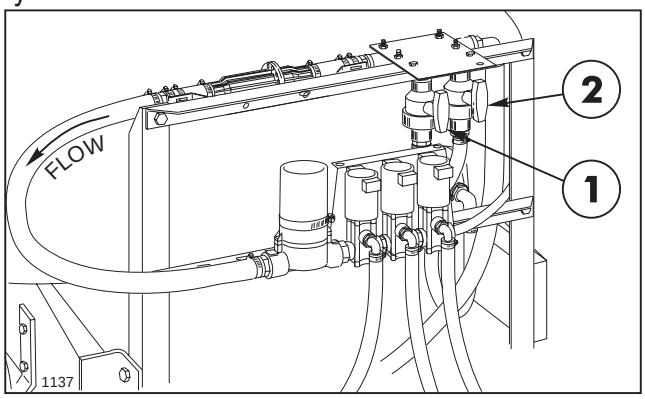

FIG. 3

1. By-Pass Valve Handle
2. Jet Agitator Valve Handle

BEFORE OPERATION:

Check all of your equipment...make certain that all components are clean...including the Tank, Pump, Control Valves, Strainers, Check Valves, Hoses, Nozzles, Spray Tips and Suction Line Strainer.

CONSOLE FEATURES

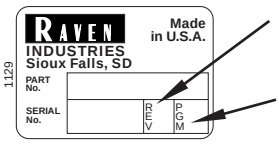

Console REV. (Revision)can be determined by letter stamped in REV. box on label.

Console PGM (Program) can be determined by letter stamped in PGM box on label.

IMPORTANT: This Console requires selection of area measurement in **US** (acres); **SI** [hectares] or **TU** {1,000 sq. ft.} and type of speed sensor **SP1** (wheel drive, etc.), **SP2** (radar) speed sensor, or **SP3** (wheel drive). **(The Toro Workman® Pro-Control uses the SP1 wheel drive sensor.)**

Selects Manual or fully Automatic control. Can automaticlly control two rates.

POWER - Turns Console OFF or ON. Turning Console OFF does not affect data stored in the computer.

Manual override control provides capability for spot spraying.

Booms can be controled indvidually, or all at once with MASTER ON/OFF switch.

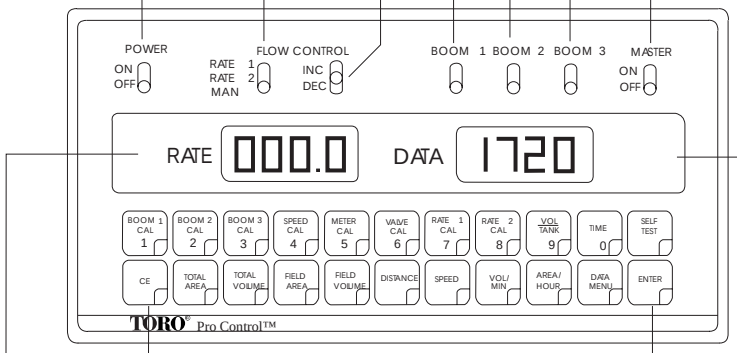

1117

Displays operating rate of application.

Displays function and calibration data.

CE - Use like you do CE key on a calculator. This key is also used to select an area base measurement of US (acres), SI [hecatres], or TU {1,000 sq. ft.} when programming console.

ENTER - Used only to enter data into the console.

CALIBRATION KEYS - Used to enter data to the Console to calibrate the system.

BOOM 1 CAL	Length of Boom 1
BOOM 2 CAL	Length of Boom 2
BOOM 3 CAL	Length of Boom 3
SPEED CAL	Determined by Wheel Size
METER CAL	Flow Meter Calibration Number
VALVE CAL	Control Valve Response Time
RATE 1 CAL	Target Application Rate
RATE 2 CAL	Target Application Rate
SELF TEST	Simulates vehicle speed

FUNCTION KEYS - Used to display data.

TOTAL AREA	Total Area Sprayed
TOTAL VOLUME	Total Volume Sprayed
FIELD AREA	Field Area Sprayed
FIELD VOLUME	Volume Applied to Field
DISTANCE	Distance Traveled
SPEED	Speed of Vehicle
VOLUME/MIN	Volume Sprayed per Minute at Speed Being Traveled
VOLUME/ TANK	Volume Remaining in Tank
AREA/HOUR	Area Sprayed per Hour at Speed Being Traveled
TIME	24 hour clock (military time)

BEFORE SPRAYING

CONSOLE CALIBRATION:

CALCULATING "BOOM CAL" (Boom 1, Boom 2, Boom 3)

Boom cal is calculated by multiplying the number of spray tips times the tip spacing. For the Toro Pro-Control™, having nozzles at 20" [50 cm] spacing, the Console should be programmed as follows: **"Boom 1 (left)" - 80 [204]: "Boom 2 (center)" - 60 [152]: "Boom 3 (right)" - 80 [204].**

CALCULATING "SPEED CAL"

NOTE: This measurement is critical to the performance of the Toro Pro-Control ™ Spray System. MEASURE CAREFULLY. Be sure tire is properly inflated before measuring. Measure tire in type of soil in which you will be spraying and with Carrier Tank one half full. Circumference of tire will vary when measured in soft soil versus hard packed soil. For best results, measure several times and average the results. Re-measure periodically.

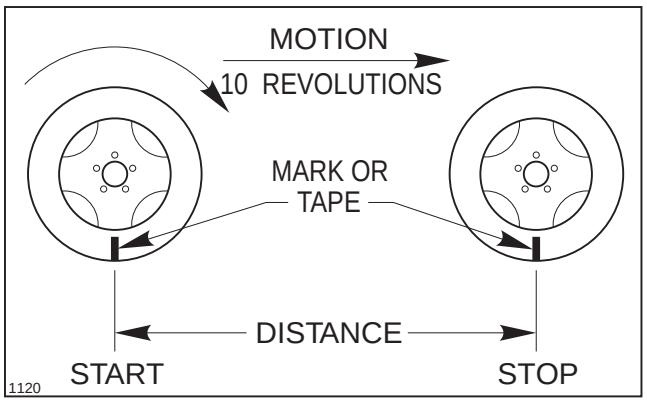

FIG. 4.

1. Place chalk mark or tape on a rear vehicle tire. See FIG. 4.

2. Mark initial spot on the ground.

3. Drive vehicle straight ahead counting 10 revolutions of the wheel with the mark stopping at the same position as starting.

4. Measure distance from start mark in inches. [Decimeters]. Round off fractions. repeat this procedure 2-3 times and average the results. Your measurement should be approximately as follows:

23" Rear Tire (Standard) - 673"

24" Rear Tire (Optional) - 702"

After determining your measurement, take that number times the multiplier 1.025 (Example 673 x 1.025 = 690). Round off this new number to either the lowest or highest position from the decimal amount. Enter this number in inches under "SPEED CAL". **NOTE: This measurement is extremely critical! Use this number as a reference point only. Check tire pressures often and re-measure periodically.**

5. Write down this SPEED CAL calibration number on page 15 for future reference when programming the Control Console.

CALCULATING "METER CAL"

The Flow meter calibration number is stamped on the white tag attached to each Flow Meter Cable. Record this number on page 15 in case the tag is ever lost or disfigured.

CALCULATING "VALVE CAL"

1. The initial Valve calibration number for VALVE CAL is 2611. The VALVE CAL number is used to control response time of the Motorized Control Valve to the change in vehicle speed. After operating the system, you may desire to refine this number. See definitions below:

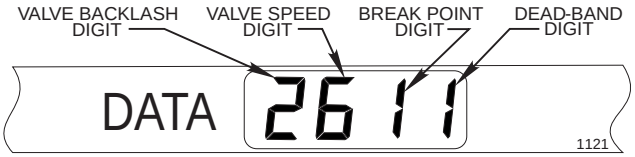

Valve Backlash -
Controls the time of the first correction pulse after a change in correction direction is detected **(Inc. to Dec. or Dec. to Inc.)**.

Range: 1 to 9 1 - Short Pulse, 9 - Long Pulse

Valve Speed Digit -
Controls response time of Control Valve motor. **CAUTION: Running the Control Valve too fast will cause the system to oscillate.**

Range: 1 to 9 1 - Slow, 9 - Fast

Brake Point Digit Percent-
Sets the point at which the Control Valve motor begins braking, so as not to over shoot the desired rate. Digit is percent away from target rate.

Range: 0 to 9 0 = 5%, 1 = 10%, 9 = 90%

Dead-Band Digit -
Allowable difference between target and actual application rate, where rate correction is not performed.

Range: 1 to 9 1 = 1%, 9 = 9%

BEFORE SPRAYING

CONSOLE CALIBRATION (CONT'D):

NOTE: For new installations you must first perform the "Initial Console Programming" on page 10.

CALCULATING "RATE 1" AND "RATE 2"

Refer to the Chemical Manufacturer's instructions on the chemical container label to determine the application rate of the chemical to be sprayed.

Enter the application rate (noting decimal) in RATE 1 and RATE 2. Enter the rates in gallons per acre (US mode), gallons per 1000 sq. ft. {TU mode} or liters per hectare [SI mode] depending on the base measurement selected. **NOTE:** If you do not use a second rate, enter the same rate in both RATE 1 and RATE 2.

See the nozzle charts on page 8 or 9 to be sure that your spray nozzles have the capacity necessary to achieve the application rate selected.

To select the proper nozzle, you need to know:

1. Recommended chemical application rate in gallons per acre, gallons per 1000 sq. ft. or liters per hectare.

2. Average Vehicle speed in Miles per hour or kilometers per hour.

3. Nozzle spacing (20 inches or 50 centimeters.)

With this information you can calculate the volume per minute per nozzle, using the formulas below.

US FORMULA:

$$\text{G.P.M. (Per Nozzle)} = \frac{\text{G.P.A. x M.P.H. X 20 ins.}}{5940}$$

TU (Turf) FORMULA:

$$\text{G.P.M. (Per Nozzle)} = \frac{\text{G.P.K. x M.P.H. x 20 ins.}}{137}$$

SI (METRIC) FORMULA:

$$\text{lit/min (Per Nozzle)} = \frac{\text{lit/ha x km/h x 50 cm}}{60{,}000}$$

Use G.P.M. (lit/min) and Pressure to select appropriate nozzle from chart on page 8 or 9.

EXAMPLE (US FORMULA):

Application Rate = 75 Gallons/Acre
Vehicle Speed = 4 M.P.H.
Nozzle Spacing = 20 inches

$$\frac{\text{75 G.P.A. x 4 M.P.H. x 20}}{5940} = \textbf{1.00 G.P.M. (per nozzle)}$$

With 1.00 G.P.M. and a pressure of 40 P.S.I. you would select Nozzle No. 95-9188.

EXAMPLE (TU FORMULA):

Application Rate = 1.70 Gal./1000 sq. ft.
Vehicle Speed = 4 M.P.H.
Nozzle Spacing = 20 inches

$$\frac{\text{1.70 G.P.K. x 4 M.P.H. x 20}}{137} = \textbf{1.00 G.P.M. (per nozzle)}$$

EXAMPLE (SI FORMULA):

Application Rate = 907 lit/hectare
Vehicle Speed = 5 km/h
Nozzle Spacing = 50 cm

$$\frac{\text{907 lit/ha x 5 km/h x 50}}{60{,}000} = \textbf{3.78 lit/min. (per nozzle)}$$

With 3.78 lit/min and a pressure at 275 kPa you would select nozzle No. 95-9188

SYMBOL DEFINITIONS:

GPM	- Gallons per minute
lit/min	- Liters per minute
dl/min	- Deciliter per minute
PSI	- Pounds per square inch
kPa	- Kilopascal
GPA	- Gallons per acre
lit/ha	- Liter per hectare
ml/ha	- Milliliter per hectare
GPK	- Gallons per 1,000 sq. ft.
mm	- Millimeters
cm	- Centimeters
dm	- Decimeters
m	- Meter
MPH	- Miles per hour
km	- Kilometers
km/h	- Kilometers per hour
US	- Volume per ACRE
SI	- Volume per HECTARE
TU	- Volume per 1,000 sq. ft.

LIQUID CONVERSIONS

U.S. Gallons x 128 = Fluid Ounces
U.S. Gallons x 3.785 = Liters
U.S. Gallons x 0.83267 = Imperial Gallons
U.S. Gallons x 8.34 = Pounds (Water)

LENGTH

1 millimeter (mm) = 0.039 inch
1 centimeter (cm) = 0.393 inch
1 meter (m) = 3.281 feet
1 kilometer (km) = 0.621 mile
1 inch = 25.4 millimeters; 2.54 centimeters
1 mile = 1.609 kilometers

PRESSURE

1 psi = 6.89 kPa

AREA

1 square meter = 10.764 sq. feet
1 hectare (ha) = 2.471 acres; 10,000 sq.meters
1 acre = 0.405 hectare; 43,560 sq. ft.
1 sq. mile = 640 acres; 258.9 hectares

Gallons Per Acre Application Rates

TORO Part No.	Nozzle Number / Color Code	Pressure (PSIG)	Capacity 1 Nozzle (GPM)	Gallons per Acre at 20" Spacings							
				2.5 MPH	3 MPH	3.5 MPH	4 MPH	4.5 MPH	5 MPH	5.5 MPH	6 MPH
95-9221	Yellow	20	0.14	16.6	13.9	11.9	10.4	9.2	8.3	7.6	6.9
		30	0.17	20.2	16.8	14.4	12.6	11.2	10.1	9.2	8.4
		40	0.20	23.8	19.8	17.0	14.9	13.2	11.9	10.8	9.9
		50	0.22	26.1	21.8	18.7	16.3	14.5	13.1	11.9	10.9
95-9222	Red	20	0.28	33	28	24	21	18	17	15	14
		30	0.35	42	35	30	26	23	21	19	17
		40	0.40	48	40	34	30	26	24	22	20
		50	0.45	53	45	38	33	30	27	24	22
95-9223	Brown	20	0.35	42	35	30	26	23	21	19	17
		30	0.43	51	43	36	32	28	26	23	21
		40	0.50	59	50	42	37	33	30	27	25
		50	0.56	67	55	48	42	37	33	30	28
95-9224	Gray	20	0.42	50	42	36	31	28	25	23	21
		30	0.52	62	51	44	39	34	31	28	26
		40	0.60	71	59	51	45	40	36	32	30
		50	0.67	80	66	57	50	44	40	36	33
95-9225	White	20	0.57	68	56	48	42	38	34	31	28
		30	0.69	82	68	59	51	46	41	37	34
		40	0.80	95	79	68	59	53	48	43	40
		50	0.89	106	88	76	66	59	53	48	44
95-9188	Light Blue	20	0.71	84	70	60	53	47	42	38	35
		30	0.87	103	86	74	65	57	52	47	43
		40	1.00	119	99	85	74	66	59	54	50
		50	1.12	133	111	95	83	74	67	60	55
95-9226	Light Green	20	1.06	126	105	90	79	70	63	57	52
		30	1.30	154	129	110	97	86	77	70	64
		40	1.50	178	149	127	111	99	89	81	74
		50	1.68	200	166	143	125	111	100	91	83

Gallons Per 1000 Sq. Ft. Application Rates

TORO Part No.	Nozzle Number / Color Code	Pressure (PSIG)	Capacity 1 Nozzle (GPM)	Gallons per 1000 Sq. Ft. at 20" Spacings							
				2.5 MPH	3 MPH	3.5 MPH	4 MPH	4.5 MPH	5 MPH	5.5 MPH	6 MPH
95-9221	Yellow	20	0.14	0.38	0.32	0.27	0.24	0.21	0.19	0.17	0.16
		30	0.17	0.46	0.39	0.33	0.29	0.26	0.23	0.21	0.19
		40	0.20	0.54	0.45	0.39	0.34	0.30	0.27	0.25	0.23
		50	0.22	0.60	0.50	0.43	0.37	0.33	0.30	0.27	0.25
95-9222	Red	20	0.28	0.76	0.63	0.54	0.48	0.42	0.38	0.35	0.32
		30	0.35	0.95	0.79	0.68	0.60	0.53	0.48	0.43	0.40
		40	0.40	1.09	0.91	0.78	0.68	0.60	0.54	0.49	0.45
		50	0.45	1.22	1.02	0.87	0.77	0.68	0.61	0.56	0.51
95-9223	Brown	20	0.35	0.95	0.79	0.68	0.60	0.53	0.48	0.43	0.40
		30	0.43	1.17	0.97	0.84	0.73	0.65	0.58	0.53	0.49
		40	0.50	1.36	1.13	0.97	0.85	0.76	0.68	0.62	0.57
		50	0.56	1.52	1.27	1.09	0.95	0.85	0.76	0.69	0.63
95-9224	Gray	20	0.42	1.14	0.95	0.82	0.71	0.63	0.57	0.52	0.48
		30	0.52	1.41	1.18	1.01	0.88	0.79	0.71	0.64	0.59
		40	0.60	1.63	1.36	1.17	1.02	0.91	0.82	0.74	0.68
		50	0.67	1.82	1.52	1.30	1.14	1.01	0.91	0.83	0.76
95-9225	White	20	0.57	1.55	1.29	1.11	0.97	0.86	0.78	0.70	0.65
		30	0.69	1.88	1.56	1.34	1.17	1.04	0.94	0.85	0.78
		40	0.80	2.18	1.81	1.55	1.36	1.21	1.09	0.99	0.91
		50	0.89	2.42	2.02	1.73	1.51	1.34	1.21	1.10	1.01
95-9188	Light Blue	20	0.71	1.93	1.61	1.38	1.21	1.07	0.97	0.88	0.80
		30	0.87	2.37	1.97	1.69	1.48	1.31	1.18	1.08	0.99
		40	1.00	2.72	2.27	1.94	1.70	1.51	1.36	1.24	1.13
		50	1.12	3.05	2.54	2.18	1.90	1.69	1.52	1.38	1.27
95-9226	Light Green	20	1.06	2.88	2.40	2.06	1.80	1.60	1.44	1.31	1.20
		30	1.30	3.54	2.95	2.53	2.21	1.96	1.77	1.61	1.47
		40	1.50	4.08	3.40	2.91	2.55	2.27	2.04	1.85	1.70
		50	1.68	4.57	3.81	3.26	2.86	2.54	2.28	2.08	1.90

Liters Per Hectare Application Rates

TORO Part No.	Nozzle Number / Color Code	Pressure (kPa)	Capacity 1 Nozzle (L/min)	Liters per Hectare at 50 cm Spacings							
				4 km/h	5 km/h	6 km/h	7 km/h	8 km/h	9 km/h	10 km/h	11 km/h
95-9221	Yellow	150	0.53	159	127	106	91	80	71	64	58
		200	0.64	192	154	128	110	96	85	77	70
		275	0.76	228	182	152	130	114	101	91	83
		350	0.83	249	199	166	142	125	111	100	91
95-9222	Red	150	1.06	318	254	212	182	159	141	127	116
		200	1.32	396	317	264	226	198	176	158	144
		275	1.51	453	362	302	259	227	201	181	165
		350	1.70	510	408	340	291	255	227	204	185
95-9223	Brown	150	1.40	420	336	280	240	210	187	168	153
		200	1.61	483	386	322	276	242	215	193	176
		275	1.89	567	454	378	324	284	252	227	206
		350	2.13	639	511	426	365	320	284	256	232
95-9224	Grey	150	1.67	501	401	334	286	251	223	200	182
		200	1.93	579	463	386	331	290	257	232	211
		275	2.27	681	545	454	389	341	303	272	248
		350	2.56	768	614	512	439	384	341	307	279
95-9225	White	150	2.23	669	535	446	382	335	297	268	243
		200	2.58	774	619	516	442	387	344	310	281
		275	3.02	906	725	604	518	453	403	362	329
		350	3.41	1023	818	682	585	512	455	409	372
95-9188	Light Blue	150	2.79	837	670	558	478	419	372	335	304
		200	3.22	966	773	644	552	483	429	386	351
		275	3.78	1134	907	756	648	567	504	454	412
		350	4.28	1284	1027	856	734	642	571	514	467
95-9226	Light Green	150	4.18	1254	1003	836	717	627	557	502	456
		200	4.84	1452	1162	968	830	726	645	581	528
		275	5.67	1701	1361	1134	972	851	756	680	619
		350	6.40	1920	1536	1280	1097	960	853	768	698

BEFORE SPRAYING

CONSOLE PROGRAMMING:

After all installation procedures have been completed and Console power is turned "ON", the Console will flash "CAL" in the RATE display. This means you must calibrate or program the Console before it can be operated. This is a one-time operation which does not have to be repeated.

NOTE: Turning the POWER ON/OFF switch to "OFF" does not affect the Console memory. All data is retained.

While the calibration figures shown below are useful guidelines, calculations should be carried out for your particular machine and refined to accommodate varying operating conditions and desired applications.

DATA ENTRY:

When entering data into the console, the entry sequence is always the same. **(NOTE: DATA MUST BE ENTERED INTO THE FIRST EIGHT KEYS AFTER THE INITIAL CONSOLE PROGRAMMING IS PERFORMED).**

1. Depress the key in which you wish to enter data.

2. Depress the "ENTER" key. An "E" will illuminate in the DATA display.

3. Depress the keys corresponding to the number you wish to enter (i.e., "1", "0", "2", "4"). The numbers will be displayed in the DATA display as they are entered.

4. Complete the entry by again depressing the "ENTER" key.

INITIAL CONSOLE PROGRAMMING:

If an entry selection error is made during steps 1,2,3, and 4, the Console can be reset by turning off console power and turning console on while depressing the CE key.

1. Turn power on, the RATE wintow will flash "CAL". The DATA window will display "US"

a. Depressing momentarily CE steps the DATA display from US (acres) to SI [Hectares].

b. Depressing momentarily CE steps the DATA display from SI [Hectares] to TU.

c. Depressing momentarily CE steps the DATA display from TU (1,000 sq. ft.) to US.

2. Selecting US, SI or TU

a. To select US, SI or TU, step CE until the desired code is displayed in DATA display.

b. Momentarily depress ENTER. The DATA display will now display SP1.

3. Display SP1, SP2 or SP3 **(Toro Workman® Pro Control™ uses wheel drive SP1).**

a. Depressing momentarily CE steps the DATA display from SP1 (wheel drives, etc.) to SP2 or SP3.

4. Selecting SP1.

a. To select SP1, step with CE until SP1 is displayed in DATA display.

b. Momentarily depress ENTER the DATA display will now display 0.

5. Enter BOOM 1 CAL 80 [204] in key labeled: BOOM 1 CAL 1

6. Enter BOOM 2 CAL 60 [152] in key labeled: BOOM 2 CAL 2

7. Enter Boom 3 CAL 80 [204] in key labeled: BOOM 3 CAL 3

8. Enter SPEED CAL in key labeled: SPEED CAL 4 (Determined on page 6).

9. Enter METER CAL calibration number in key labeled: METER CAL 5. (This number is located on white tag on Flow Meter Cable.

10. Enter VALVE CAL calibration number **(2611)** in key labeled: VALVE CAL 6

11. Enter the Application Target Rate in either gallons per acre, liters per hectare or gallons per 1000 sq. ft. (selected in Step 2) you want to spray in the key labeled: RATE 1 CAL 7

12. Enter a second target application rate in either gallons per acre, liters per hectare or gallons per 1000 sq. ft. (selected in Step 2) you want to spray in key labeled RATE 2 CAL 8 if desired.

NOTE: If you do not use a second rate, enter the same rate in both RATE 1 and RATE 2.

YOU HAVE NOW COMPLETED THE INITIAL PROGRAMMING THE CONSOLE The flashing "CAL" will now extinguish. If not, repeat procedure starting at step 5.

See page 28 & 29 for Performance Verification & Page 31 & 32 for Quick Referance Programming Cards.

BEFORE SPRAYING

CONSOLE PROGRAMMING (Cont'd):

You may also want to enter data in the keys labeled: VOL TANK 9 and TIME 0 although it is not required for operation of the system.

13. VOL TANK 9 (Optional) - Enter the amount of material in the Tank. This number must be re-entered each time the Tank is refilled. The function monitors Tank volume while spraying, based on application rate.

14. TIME 0 "TIME" (Optional) - Enter time of day based on 24 hours. (i.e., 1:30 p.m. is 13:30), or enter "0" to measure elapsed time.

OTHER DISPLAY FEATURES:

1. To display TOTAL AREA covered, momentarily depress key labeled: TOTAL AREA

To "zero out" this total at any time, enter a "0" in this key.

2. To display TOTAL VOLUME sprayed, momentarily depress key labeled: TOTAL VOLUME

To "zero out" this total at any time, enter a "0" in this key.

3. To display FIELD AREA covered, momentarily depress key labeled: FIELD AREA

To "zero out" this total at any time, enter a "0" in this key.

4. To display FIELD VOLUME sprayed, momentarily depress key labeled: FIELD VOLUME

To "zero out" this total at any time, enter a "0" in this key.

5. To display DISTANCE (feet [m] traveled, momentarily depress key labeled: DISTANCE

To "zero out" this total at any time, enter a "0" in this key.

6. To display MPH [km/h], momentarily depress key labeled: SPEED

7. To display VOL/MIN (volume per minute) being sprayed at speed being traveled, momentarily depress key labeled: VOL/ MIN

To "zero out" this total at any time, enter a "0" in this key.

8. To display AREA/HOUR (area per hour) momentarily depress the key labeled: AREA/ HOUR. This is an actual calibration of the area per hour at the present speed you are traveling. It is not an average over time.

9. To display US, TI or TU and SP1, SP2 or SP3 after being selected, depress and hold SELF TEST. These selections will be alternately displayed.

10. The DATA MENU button is used with an optional serial interface and printer.

SELF TEST FEATURE

SELF TEST allows speed simulation for testing the system while the vehicle is not moving. Enter the simulated operating speed in the key labeled: SELF TEST

If 4.0 MPH [6.4 km/h] is desired, depress Enter 4, 0 [6, 4] Enter.

Speed will appear in the DATA display.

The SELF TEST speed will clear itself when motion of vehicle is detected by the Speed Sensor. A SPEED CAL value of 900 [230] or greater is recommended when operating in this mode.

SEQUENCE TO ACTIVATE DATA-LOCK*

1. Depress CE for 5 seconds, NEW CODE will appear.

2. Enter 4 digit code within 15 seconds.

EXAMPLE: For 1058 depress:

BOOM 1 CAL 1 TIME 0 METER CAL 5 RATE 2 CAL 8 and ENTER.

SEQUENCE TO CHANGE DATA-LOCK

***** The DATA LOCK feature prohibits the entry of data without first entering the DATA LOCK CODE.

1. Depress SPEED for 5 seconds, OLD CODE message will appear.

2. Enter 4 digit code within 15 seconds.

NEW CODE message will appear. Enter 4 digit code within 15 seconds.

EXAMPLE: For 1258, depress: BOOM 1 CAL 1 BOOM 2 CAL 2 METER CAL 5 RATE 2 CAL 8 and ENTER.

ENTER MODE SEQUENCE WITH ACTIVATED DATA-LOCK

1. Depress the key into which you wish to enter data.

2. Depress ENTER, CODE message will appear. Enter your DATA LOCK CODE. If code is correct, "E" will appear. Now enter data normally.

The DATA LOCK CODE may be cleared by entering a code of "0" or by turning off console power and turning console on while depressing the CE key.

POWER DOWN DELAY FEATURE:

To conserve the Vehicle's 12-volt battery, the Power Down Delay should be set. In this "power down" mode, all data will be retained, but the time of day clock will not operate. The Power Down Delay is initially set at 10 days.

TO CHANGE DELAY TIME:

1. Depress "TIME" for 5 seconds and the current delay time will appear.

2. Reset the delay time by pressing "ENTER", the desired delay time (normally 1-2 days) and "ENTER".

CONSOLE ALARM FEATURE

Console alarm sounds if application rate is 30% or more away from target application rate for 5 seconds.

1. Displaying A on or A off.

a. Depressing BOOM 1 CAL 1 for 5 seconds Displays A on (alarm on) or A off (alarm off).

2. Selecting A on or A off.

a. To select A on or A off step with CE until desired code is displayed in Data display.

b. Depressing any other key will lock that selection.

THE FEATURES LISTED BELOW ARE NOT NECESSARY TO THE OPERATION OF THE PRO-CONTROL™ SYSTEM, BUT ARE INCLUDED AND CAN BE ACCESSED AT THE OPERATOR'S OPTION.

DISPLAY MENU:

Depress BOOM 1 CAL 1 for 7 seconds until DATA display shows "d on". Depressing CE key momentarily, steps the DATA display between "d on" and "doFF". "d on" means RATE displays target rate when actual rate is within a percentage of target rate. This percentage is determined by third digit of Valve CAL value as shown:

Brake point digit
(3rd digit) of Valve Cal 2 1 [2] 3

0=1% + Deadband	5=25% + Deadband
1=3% + Deadband	6=30% + Deadband
2=7% + Deadband	7=35% + Deadband
3=10% + Deadband	8=40% + Deadband
4=20% + Deadband	9=45% + Deadband

Actual rate is displayed if unit does not reach deadband within 10 seconds. "doFF" means RATE displays actual rate at all times.

LOW LIMIT FLOW SET POINT AND LOW LIMIT ALARM

Depress VOL/MIN until DATA display flashes. A low limit flow rate may now be entered.

If actual Volume Per Minute falls below this limit, the Control Valve stops closing, the Alarm sounds and the rate display flashes "-LL-". The low Limit value should be determined with all Booms"on". This value is automatically proportional to the percentage of Booms that are "on". (i.e. If the entered low limit is 4 GAL/MIN and half the Total Boom length is shut off, the Console automatically reduces the low limit to 2 GAL/MIN)

CONTROL VALVE DELAY

Depress SPEED CAL 4 until DATA display flashes. The left most digit is the Valve control delay digit. This feature allows the user to set a delay between the time the Booms are turned on and when the Console begins to control the flow rate. A value of 1-9 means a delay of 1-9 seconds respectively. A value of "0" means no delay. This delay is active if the time between turning off and turning on the Booms is less than 30 seconds.

BEFORE SPRAYING

INITIAL SYSTEM SET-UP:

1. Fill the Tank with water and open the Suction Line Valve. See FIG. 6.

IMPORTANT! The pump will be damaged if it is activated before it is completely filled with liquid. Be certain the suction line valve is open and liquid has reached the pump.

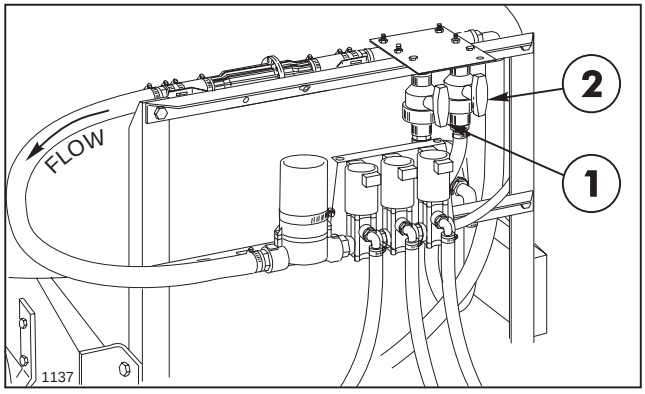

FIG. 5

1. By-Pass Valve Handle (open)
2. Jet Agitator Valve Handle (open)

2. Take the vehicle out of gear and set the parking brake. Turn the Electric Clutch/Pump Switch to the "OFF" position. Start the engine and set the throttle at 3/4 to full RPM to represent your desired spraying speed.

3. Place MASTER ON/OFF to "ON" and BOOM ON/OFF switches to "OFF".

4. Place MAN/AUTO switch to "MAN".

5. Place POWER ON/OFF to "ON".

6. Verify that correct Boom widths and calibrations for Speed CAL, Meter CAL, Valve CAL, RATE 1 and RATE 2 have been entered in Console.

7. Use the "SELF TEST" feature as described on page 11.

8. Turn the Electric Clutch/Pump Switch to the "ON" position.

9. Operate BOOM ON/OFF switches to verify that each Boom Solenoid Valve is operating and that there are no plugged nozzles.

10. Place all BOOM ON/OFF switches to "ON".

11. Hold the MAN. ADJ. switch in **INCR.** position for approximately 12 seconds. This assures that motorized Control Valve is fully **open.**

12. Verify that the maximum pressure (shown on Pressure Gauge) and RATE can be achieved. Adjust pressure with ball valve in By-Pass Line to 80 p.s.i. **max.** See FIG. 5.

13. Adjust ball valve in Agitator Line for desired agitation. Verify that maximum pressure is still present at the Pressure Gauge.

14. Hold the MAN. ADJ. switch in **DECR.** position for approximately 12 seconds. This assures that motorized Control Valve is fully **closed.**

15. Verify that minimum pressure and RATE can be achieved.

INITIAL SYSTEM FIELD TEST:

1. Fill the Tank with water and open the Suction Line Valve. See FIG. 6.

IMPORTANT! The pump will be damaged if it is activated before it is completely filled with liquid. Be certain the suction line valve is open and liquid has reached the pump.

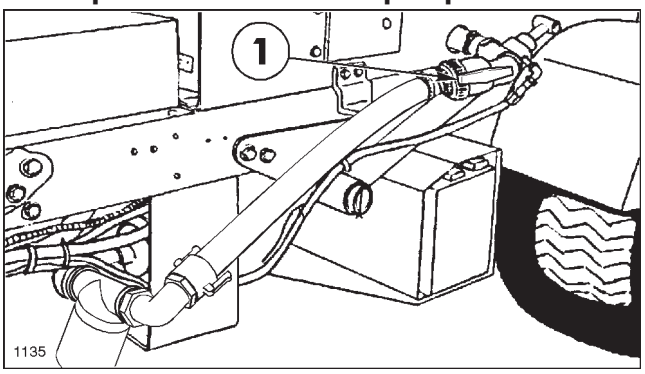

FIG. 6

1. Suction Line Valve (open)

2. Drive Vehicle at desired spraying speed with Sprayer Booms off. Verify MPH readout on Console by depressing SPEED.

3. Engage the Spray Pump, place MASTER ON/OFF switch to "ON" and BOOM ON/OFF switches to "ON".

4. Place the RATE 1/ RATE2 / MAN switch to RATE 1.

5. Increase or decrease vehicle speed by one MPH. The system should automatically correct the target application rate.

If the system is unable to correct to the desired RATE, check for an empty Tank, a plugged line, a malfunctioning Pump, improper Vehicle speed, a defect in the system or improper set-up & nozzle sizes.

If after eliminating the possibilities listed above, the system is unable to correct to the desired RATE, first review the "INITIAL SYSTEM SET-UP", then refer to MIANTENENCE and TROUBLESHOOTING GUIDES" on pages 17-21.

BEFORE SPRAYING

INITIAL SYSTEM FIELD TEST(Cont'd):

5. At the end of each swath sprayed, switch the MASTER ON/OFF to "OFF" to shut off flow. This also shuts off the acreage totalizer.

6. Verify acres covered and gallons used.

FILLING THE SOLUTION TANK:

⚠ DANGER

Chemicals can be hazardous!

- **Read carefully the directions printed on the chemical manufacturer's labels before handling chemicals. Instructions on chemical manufacturer's container labels, regarding mixing proportions, should be read and strictly followed.**
- **The concentrate should not be poured into an empty Tank: fill Tank about 3/4 full with clean, clear water, add chemical concentrate SLOWLY. With full agitation finish filling Tank with water.**
- **Keep spray material from skin. If spray material comes in contact with body, wash it off immediately with clean water and detergent.**
- **Always wear goggles and other protective equipment as recommended by the Chemical Manufacturer.**

IMPORTANT! DO NOT add chemical to Tank until just before use. Follow the chemical manufacturer's instructions for mixing spray solution to obtain desired application rate.

FILL THE CLEAN WATER WASH TANK.

NOTE: Fill Clean Water Wash Tank with clean water only. Check to assure tank is full before each operation.

In case of chemical contact with skin or eyes, a fresh water wash tank has been installed on the R.H. side of the vehicle. See FIG. 7.

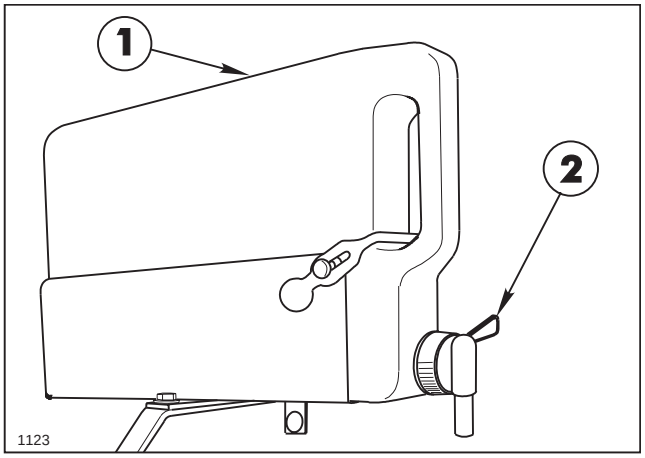

FIG. 7

1. Clean Water Wash Tank 2. Tank Spigot

1. Turn Tank Spigot to on position. See FIG. 7.

2. Hold contaminated area directly under water stream.

For future reference, pencil in your calibrations numbers in the spaces below.

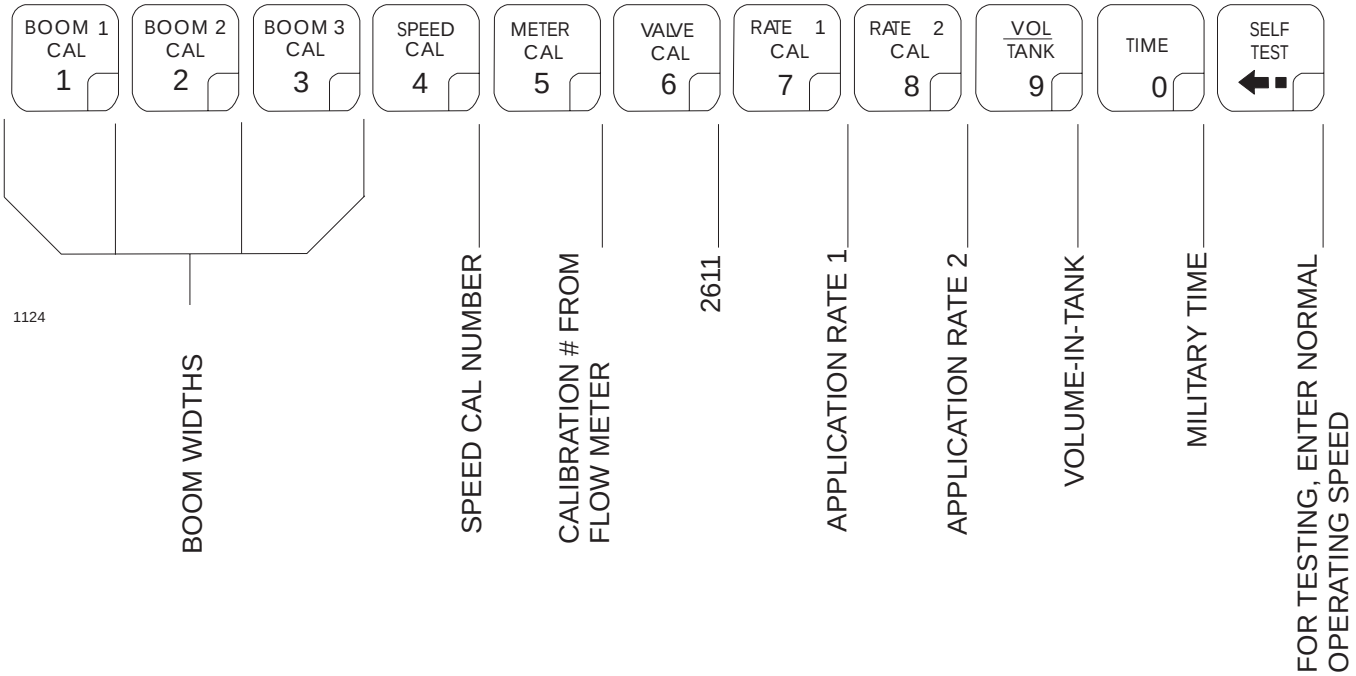

OPERATION

USING THE SPRAYER:

IMPORTANT! Check all of your equipment... make certain that all components are clean... including the Tank, Pump, Control Valves, Strainers, Check Valves, Hoses, Nozzles, Spray Tips and Suction Line Strainer.

With the Pro Control™ Console programmed to achieve the application rate of the chemical selected, and after the initial Field Test to verify the program, proceed as follows:

1. Start the vehicle engine and position the throttle at full (or nearly full) speed to provide the necessary ground speed, pressure and volume.

2. Engage the Pump and use the Master ON/OFF Switch and individual Boom Switches, to control Boom sections.

IMPORTANT! While operating the Sprayer:

- Do not overlap areas that have been sprayed previously.
- Watch for plugged Nozzles. Replace all worn Nozzles or those producing streaky or uneven patterns.

3. Stop the spray flow **before** stopping the vehicle.

AFTER SPRAYING:

It is extremely important to carefully wash and clean the Tank after **every** use.

Not only the Tank but the Pump, Hoses, Nozzles, Screens, Filters, and the exterior of the Sprayer also should be cleaned.

Flush Pump After Use

One for the most common causes for faulty pump performance is “gumming” or corrosion inside the pump. Flush the pump and entire system with a solution that will chemically neutralize the liquid pumped. Mix according to the manufacturer’s directions. This will dissolve most residue remaining in the pump, leaving the inside of the pump clean for the next use.

A **minimum** of three 50 gallon rinses usually is required for all components of the Sprayer. The addition of a detergent cleaner may be advisable in the initial washing. directions for such an addition, if required, are included on the chemical container.

Cleaning of Sprayer should be accomplished in an area where there is no potential for the chemicals to be washed off in surface water or to enter subsurface drainage systems.

When Sprayer is not to be used for an extended period, refer to the STORAGE section of this Manual for the detailed instructions to prevent damage to the components.

Preventative maintenance is most important to assure long life of the Pro-Control Spray System. The following maintenance procedures should be followed on a regular basis:

Flush the entire spraying system as described on page 15 after each use. Failure to clean the system can result in a chemical residue which can plug the Flow Meter, Solenoids, Control Valve, Hoses and/or Nozzle Tips, and seriously damage the Centrifugal Pump.

Wash spray nozzles thoroughly with water. Blow out orifice, clean and dry. If orifice remains clogged, clean it with a soft bristled brush... never use a metal object.

Check all of the nozzles frequently to spot any inconsistencies in the spray pattern. Worn nozzle orifices which allow a greater volume of spray material to flow through the nozzle can cause an expensive loss in chemical and/or turf damage.

SUCTION STRAINER:

Turn off Suction Line Valve if Tank is full of spray solution. Remove the cap and clean the strainer screen after every 50 hours when using liquid chemical, or after every use when spraying wettable powders.

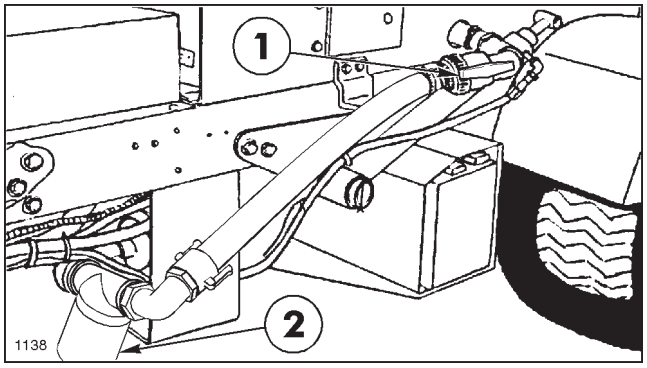

FIG. 8

1. Suction Line Valve (Open) 2. Suction Strainer

IMPORTANT: Do not operate the pump dry! Be certain Suction Line Valve is opened when spraying is resumed. Damage to Spray Pump will result when operating the Sprayer with Valve closed.

BELT TENSION:

DANGER

ROTATING PULLEYS AND BELTS CAN CAUSE SERIOUS INJURY.

- **Keep hands, feet and clothing clear while engine is running.**
- **Stop engine before attempting any belt adjustment.**

The best tension for a V belt drive is the lowest tension at which the Belt will not slip under the highest load condition. Too much tension shortens Belt and Bearing life.

Keep Belt and Pulley free from any foreign material which may cause slippage. If a V belt slips, tighten it.

Check the tension on a new drive Belt **frequently** during the **first day** of operation and periodically thereafter.

After every 200 hours of operation, check the tension of all Belts. If a Belt shows signs of cracks or fraying, install a new Belt.

CONTROL CONSOLE:

Always cover or otherwise protect the Control Console from moisture to prevent damage to the electronic system.

MAINTENANCE

Preventive maintenance will pay off many times over in peak performance and efficient operation.

FLOW METER:

Once per season the Flow Meter should be flushed and cleaned. Perform this procedure more often if suspension type products are being sprayed.

1. Thoroughly rinse and drain the entire spraying system.

2. Remove Flow Meter from Sprayer and flush with clean water to remove any chemicals.

3. Remove flange bolts from the Flow Meter. See FIG. 9.

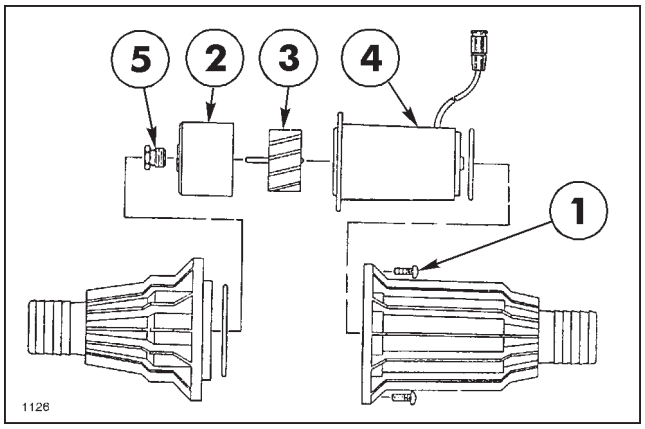

FIG. 9

1. Flange Bolt
2. Turbine Hub
3. Turbine
4. Transducer
5. Turbine Stud

4. Remove the turbine hub and turbine from inside Flow Meter.

5. Clean turbine and turbine hub of metal filings and any other foreign material, such as wettable powders. Confirm that turbine blades are not worn. Hold turbine hub and turbine in your hand and spin turbine. It should spin freely with very little drag.

6. If transducer assembly is replaced or if turbine stud is adjusted or replaced, verify the turbine fit before reassembling. Hold turbine hub with turbine on transducer. Spin turbine by blowing on it. Tighten turbine stud until turbine stalls. Loosen turbine stud 1/3 turn: the turbine should spin freely.

7. Reassemble Flow Meter.

8. Using a low pressure 5 PSI [50 kPa] jet of air, verify that the turbine spins freely. If there is drag, loosen the turbine stud on the bottom of the turbine hub by 1/3 turn, until the turbine spins freely.

PROCEDURE TO TEST THE FLOW METER CABLE:

Disconnect the Console Control Cable from the Flow Meter Cable. Hold the cable connector so that the key way is pointing in the 12 o'clock position. See FIG. 10.

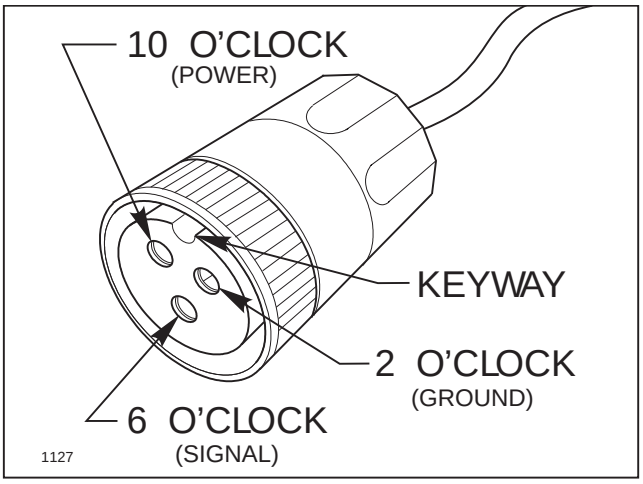

FIG. 10

VOLTAGE READINGS

2 o'clock to 6 o'clock (+5 VDC)
2 o'clock to 10 o'clock (+5 VDC)

1. Record METER CAL value _____

2. Enter a METER CAL number of one (1) in key labeled: METER CAL 5

3. Depress key labeled: TOTAL VOLUME

4. Place MASTER and BOOM switches ON.

5. With small jumper wire (or paper clip), short between 2 o'clock and 6 o'clock sockets with a "short - no short" motion. Each time a contact is made, the TOTAL VOLUME total should increment up 1 or more counts.

6. If TOTAL VOLUME does not count up. Replace defective cable.

7. Perform above voltage checks.

8. If cables all test good, refer to test Flow Meter.

NOTE: After testing is complete, re-enter correct METER CAL number before spraying.

MAINTENANCE

PROCEDURE TO RE-CALIBRATE FLOW METER:

1. Enter a METER CAL number of 10 [38] in key labeled: METER CAL 5

2. Enter a TOTAL VOLUME of 0 in key labeled: TOTAL VOLUME

3. Switch OFF Boom 2 and Boom 3.

4. Remove Boom 1 hose at boom connection and place the hose in a 5 gallon [19 liter] container.

5. Switch on Boom 1 and pump exactly 10 gallons [38 liter], two 5 gallon [19 liter] buckets.

6. The readout in TOTAL VOLUME is your new METER CAL number. (Under normal circumstances, this number should be within +/- 3% of the number stamped on the tag on Flow Meter).

7. Repeat procedure several times to confirm accuracy. (Always "zero out" TOTAL VOLUME display before retesting).

NOTE: for greatest precision, set METER CAL to 100 [378] and pump 100 gallons [378 liters] of water.

8. Enter correct METER CAL number before resuming chemical spraying.

An alternate method of calibrating your Flow Meter is to fill your applicator tank with a pre-determined amount of liquid. Set your METER CAL to the number on the tag attached to the Flow Meter. Then go out and spray until the tank is empty. The number in the TOTAL VOLUME display should be the same as the amount you put in the tank. If not, increase or decrease the METER CAL by the percentage difference.

DO NOT rely on the volume markings on the plastic tank for this procedure. They are for reference only.

PROCEDURE TO TEST SPEED SENSOR TO CONSOLE CONNECTION:

Disconnect the Speed Sensor Switch Assembly Cable from the back of the Control Console. See diagram of Console receptacle in FIG. 9.

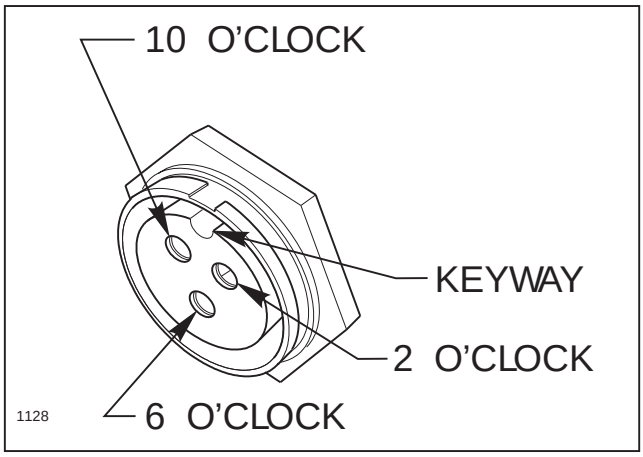

FIG. 9

VOLTAGE READINGS

10 o'clock to 6 o'clock (+5 VDC)
10 o'clock to 2 o'clock (+5 VDC)

1. Record SPEED CAL value _____.

2. Enter a SPEED CAL number of 1,000 in key labeled: SPEED CAL 4

3. Depress key labeled: SPEED

4. With small jumper wire (or paper clip), short between 10 o'clock and 6 o'clock sockets with a "short - no short" motion. This should cause a speed reading to be displayed in the Console. If speed reading is displayed, Console power is confirmed. Therefore, replace Speed Sensor Switch Assembly.

5. If no speed reading is displayed, refer to "CONSOLE TROUBLESHOOTING", pages 19, 20 and 21.

NOTE: After testing is complete, re-enter correct SPEED CAL number before spraying.

MAINTENANCE

TROUBLESHOOTING GUIDE

NO.	PROBLEM	CORRECTIVE ACTION
1	NO DISPLAY LIGHTS WITH POWER ON	1 Check fuse on back of Console. 2 Check battery connections 3 Check operation of POWER ON/OFF switch. 4 Return Console to Raven, Inc. to replace Processor Board Assembly.
2	ALL KEYBOARD LIGHTS ON AT SAME TIME	1 Return Console to Raven, Inc. to replace Processor Board Assembly.
3	A DIGIT CAN NOT BE ENTERED VIA KEYBOARD	1 Return Console to Raven, Inc. to replace Face Plate Sub-assembly.
4	AN INDICATOR LIGHT ON A KEY WILL NOT ILLUMINATE	1 Return Console to Raven, Inc. to replace Face Place Sub-assembly and/or Processor Board Assembly.
5	CONSOLE DISPLAYS FLASHING “CAL” WHENEVER VEHICLE ENGINE IS STARTED	1 Check battery voltage and battery connections. 2 Install stand-by 9-volt “alkaline” battery in battery box at rear of Console, (Duracell MN1604 or Eveready 522).
6	CONSOLE DISPLAYS FLASHING “CAL” WHENEVER MASTER SWITCH IS TURNED ON OR OFF	1 Check battery voltage and battery connections.
7	CONSOLE DISPLAYS FLASHING “CAL” WHENEVER SPEED IS CHANGED	1 Check battery voltage and battery connections. 2 Check for bad spark plug wires with engine analysis computer.
8	TIME FUNCTION IS INACCURATE OR DRIFTING	1 Return Console to Raven, Inc. to replace Processor Board Assembly.
9	ONE DISPLAY DIGIT HAS ONE OR MORE MISSING SEGMENTS	1 Return Console to Raven, Inc. to replace LCD Display Board Assembly.
10	SPEED DISPLAY “0”	1 Check Speed Sensor switch cable connector and plug on back of Console for loose pins. 2 Clean pins and sockets on Speed Sensor cable connectors. 3 Replace Speed Sensor Switch Assembly.

MAINTENANCE

TROUBLESHOOTING GUIDE (Cont'd)

NO.	PROBLEM	CORRECTIVE ACTION
11	SPEED INACCURATE OR UNSTABLE	1 Run speed check on hard surface road. If SPEED is not accurate, verify the clearance gap between the Wheel Magnets and the Switch Assembly. The gap should be 1/4 to 1". Adjust switch bracketry if required. 2 Remove one red magnet and one black magnet from the wheel. (Reposition remaining red and black magnets directly across from each other). Enter a SPEED CAL number in the Console twice as large as the correct SPEED CAL number Run speed check on hard surf
12	RATE READS "0000"	1 Verify Speed is registering accurately. If SPEED is zero, refer to Troubleshooting Problem 11. 2 Verify TOTAL VOLUME is registering flow. If not, refer to Troubleshooting Problem 16.
13	RATE INACCURATE OR UNSTABLE	1 Verify that all numbers "keyed in" Console are correct. Verify SPEED is registering accurately. If SPEED is inaccurate, refer to Troubleshooting Problem 11. 2 In MAN (Manual) operation, verify that RATE display (GPA) holds constant when SPEED is held constant. If not, refer to Troubleshooting Problem 17. 3 In MAN (manual) operation, check low end and high end pressure range. If pressure can not be adjusted manually, refer to Troubleshooting Problem 14. 4 If problem persists, return Console to Raven, Inc. to replace Processor Board Assembly.

MAINTENANCE
TROUBLESHOOTING GUIDE (Cont'd)

NO.	PROBLEM	CORRECTIVE ACTION
14	CAN NOT VARY RATE IN MANUAL OPERATION OR IN AUTO	1 Check cabling to motorized Control Valve for breaks. 2 Check connections in cabling for cleanliness. 3 Verify that there is voltage at the valve connector by placing MASTER switch ON; RATE 1 / RATE 2 / MAN switch to MAN; and Power switch to ON. Manually operate INCR\DECR switch to verify voltage. 4 Verify that valve is turning, if not, replace motorized Control Valve.
15	SPRAYER PRESSURE IS CORRECT BUT RATE IS LOW	1 Verify that nozzle strainer screens or check valves are not plugged. 2 Verify that pressure at each boom is the same. 3 Verify all nozzles are of proper and same orifice size.
16	TOTAL VOLUME DOES NOT REGISTER	1 Check Flow Meter cable for breaks and shorts. See Page 17 for test procedure. 2 Check internals of Flow Meter; clean and adjust. See Page 17. 3 Replace Flow Meter Transducer.
17	TOTAL VOLUME REGISTERS FLOW INACCURATELY	1 Verify that arrow on Flow Meter is pointing in direction of flow. 2 See Page 17 and 18.
18	MOTORIZED CONTROL VALVE ROTATES MORE THAN 1/4 TURN	1 Replace motorized Control Valve.
19	WATER INSIDE COVER OF MOTORIZED CONTROL VALVE	1 Replace Isolation Flange Assy. and Coupler Shaft. See Page 24. 2 Replace entire motorized Control Valve, if PC Board or Motor is corroded and will not turn.
20	BOOM SOLENOID(S) WILL NOT OPERATE	1 Check cable for wires with breaks. 2 Check connectors for cleanliness. 3 Check BOOM switch and MASTER switch for operation. 4 Service Boom Solenoid Valve. See Pages 25 and 26.

MAINTENANCE

CENTRIFUGAL PUMP SEAL PROBLEM TROUBLESHOOTING

Trouble	Probable Cause	Remedy
1. Cracked or broken stationary seat (Ceramic)	Seal ran dry and heated up. When liquid reached seal faces it was cooler, causing thermal cracks.	Check to insure seal chamber is full of liquid before starting pump. On high temperature application insure proper flushing at seal faces.
2. Carbon washer scored **3.** Carbon washer worn	Dirty System. Seal improperly installed. unevenly.	Have system cleaned and flushed. grooved. Check installation instructions for proper assembly.
4. Rubber bellows of seal are hard and brittle Rapid carbon wear.	Did pump run dry or cavitate.	Check to insure seal chamber is full of liquid before starting pump.
5. Retainer drive tabs badly worn or broken.	Periodic loss of lubrication at seal faces.	Insure proper flushing at seal faces.
6. Flexible bellows broken.	Seal improperly installed.	Check installation instructions for proper assembly.
7. Seal wears out shaft.	Check bearings for shaft end play. Check bearings for shaft radial movement. Check shaft straightness.	Replace bearings. Replace shaft.

MAINTENANCE

Always flush pump with water, or neutralizing agent before servicing.

Refer to the illustrated Parts List for part ordering information.

Pump Housing Disassembly

In most cases, seal replacement requires disassembly of only the pump half of the unit.

1. Remove the four casing cap screws with 9/16" box end wrench. Tap pump casing on discharge port with rubber hammer, if necessary, to break loose from mounting flange. Check inside of pump casing including suction port. If badly eroded (or damaged), pump casing should be replaced. Remove O-ring and discard. O-ring should always be replaced.

2. To remove the impeller nut, clamp the flange in a vise and insert a large screwdriver or file (at least 10" long) into impeller vanes to prevent impeller from turning when loosening nut. Use a 5/8" box end or socket wrench to remove the impeller nut by turning it counter-clockwise. See FIG. 12.

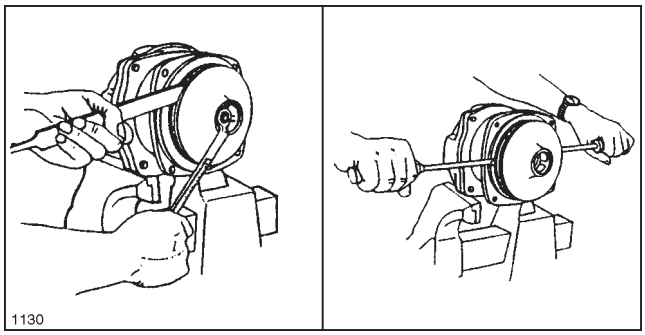

FIG. 12

3. Once nut is removed, place a screwdriver on each side (FIG. 12) behind the impeller and pry away from the mounting flange. Remove woodruff key from the shaft. Remove O-ring from the mounting flange.

Pump Seal Removal

1. Lightly lubricate shaft with mineral oil or glycerin for easier removal of seal. Using two screwdrivers positioned opposite each other, pry the rotary portion of the seal from the shaft. See FIG. 13.

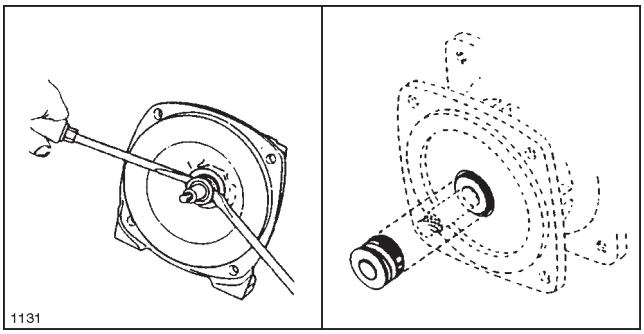

FIG. 13

2. Remove stationary seat and boot by prying out with two small screwdrivers in manner similar to impeller removal. (Caution: The seal will be damaged by removal in this manner. A new seal and rubber gasket MUST be used when pump is reassembled.)

Clean-Up of Pump Housing

1. Using a circular bottle-type wire brush with air or hand drill, clean the discharge port, suction port and the sealing areas of the O-ring on the pump casing and mounting flange.

2. After wire brush cleaning, it is recommended that the pump casing and mounting flange be further cleaned in a solvent tank to remove rust and corrosion particles.

Seal Replacement/Pump Housing Reassembly

NOTE: Reassemble if drive end is not to be repaired.

Be extremely careful with the new seal. Take special care not to scratch the lapped sealing faces of the rotary washer and stationary seat.

1. Lubricate seal cavity in mounting flange with mineral oil or glycerin.

2. Install the stationary portion of the mechanical seal by sliding over the shaft with the ceramic side out.

IMPORTANT: Make sure both seal cavity and seal are clean and lubricated. Never run the sealing faces dry.

3. To seat the seal in the seal cavity, use a piece of 3/4" PVC pipe 4" to 6" in length. Press it in firmly and squarely.

4. To install the rotary portion of the mechanical seal, place it over the shaft with the carbon side facing in, and press until it bottoms out against the stationary portion. Install rubber spacer. See FIG. 13.

5. Insert key into shaft key slot. Place impeller on shaft. Put impeller nut on shaft end using a large screwdriver or file in the impeller vanes for support, tighten impeller nut securely.

6. Install O-ring on mounting flange. Replace O-ring.

7. Place pump casing on mounting flange, insert and tighten bolts evenly.

MOTORIZED CONTROL VALVE

Replace the valve body with the iso-body kit (10) if the valve has been leaking internally.

Replace the motor assembly if the motor will not run or if the printed circuit board is corroded.

Before reassembling valve, remove the coupler shaft from the valve body. Apply Loctite to the coupler shaft (5) and the woodruff key (4). Place the coupler shaft and the woodruff key onto the motor shaft. Plug motor into the valve connector coming from the Sprayer Control Console. In manual mode operate INC/DEC switch to assure the motor rotates in both directions. Motor must stop when the coupler shaft cam releases the printed circuit board switch button.

When reassembling the valve, grease both sealing surfaces of the coupler shaft. Insert the coupler shaft into the iso-flange (9) and be sure seal properly seats on the shaft. Install on valve body and apply RTV 738 or equivalent to the mounting holes. Reassemble remaining items as shown in the parts diagram, FIG. 14.

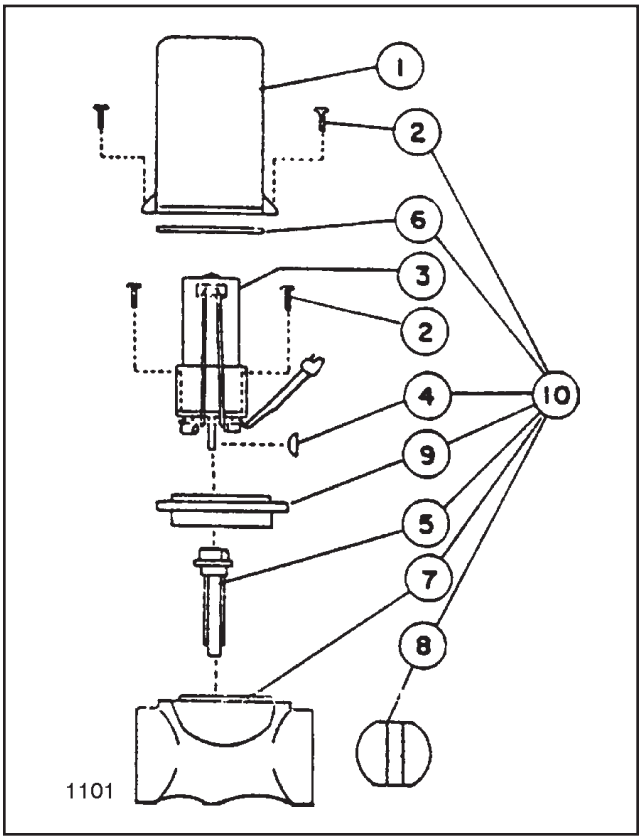

FIG. 14

1.	Valve Cover	6.	Seal
2.	Screw	7.	Valve Body
3.	Motor Assembly	8.	Butterfly
4.	Woodruff Key	9.	Isolation Flange
5.	Coupler Shaft	10.	ISO-Body Kit

MAINTENANCE

TROUBLESHOOTING THE 95-9237 SOLENOID VALVE

CONDITION	POSSIBLE CAUSES	HOW TO CHECK
1. Valve won't open	**A.** No electrical power to valve	Manually activate valve. If stem moves freely, check and clean electrical connections. Inspect electrical system.
	B. Stem movement restricted	Manually activate stem by pushing on lower diaphragm piston. If more than 5 lbs. of force is required to move stem, disassemble valve, inspect and clean all parts.
2. Valve won't shut off	**A.** Spring malfunction	Manually activate stem. Stem should offer 2-6 lbs. resistance, but movement should be quick and smooth. If there is very little resistance, disassemble and check spring.
	B. Stem movement restricted	Manually activate stem by pushing on lower diaphragm piston. If more than 5 lbs. of force is required to move stem, disassemble valve, inspect and clean all parts. Replace any damaged or worn parts with new ones.
	C. Seat washer blown out of retainer due to excessive pressure	Remove stem from valve body and inspect condition of seat washer.
	D. Seat washer worn or damaged	Replace seat washer.
3. Leakage around coil or around lower diaphragm piston.	**A.** Ruptured diaphragms	Disassemble valve and replace diaphragms with new ones.
4. Blowing fuses	**A.** Short circuit in power	Inspect wires for worn insulation and check connections.
	B. Short within the coil	Remove connections from coil and activate switch, making sure connections don't touch. If fuse doesn't blow, replace coil.
5. Valve operating properly, but pressure drop too high.	**A.** Not getting full stroke	Energize coil. Check length of stroke - should be approximately 1/8". If not, remove coil and check for obstructions between armature and armature stop. Clean all parts and reassemble.
	B. Obstruction in valve body	Remove inlet and outlet connections and inspect body.

MAINTENANCE

SOLENOID VALVE:

IMPORTANT: Before performing any maintenance, make sure electrical power to the coil is shut off and line pressure is relieved.

- Keep all electrical connections and coil clean at all times.
- A protective coating may be applied to the completed electrical connections if desired.
- Do not apply lubricating oils or other petroleum products to the valves, as this may cause swelling of the rubber parts. Also, check with the chemical manufacturer to be sure chemicals being used are compatible with the valve components.

See parts drawing below for reference numbers in parentheses( ).

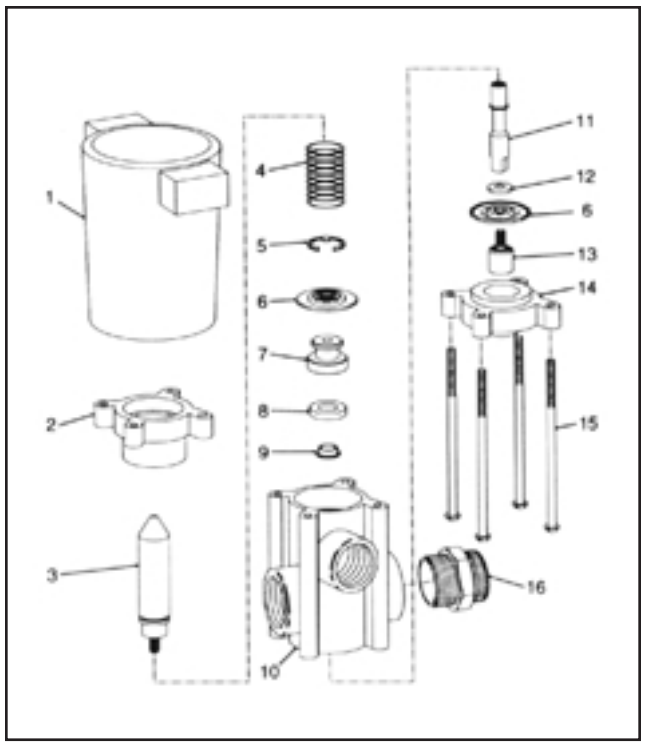

TO REPLACE COIL ONLY:

1. Shut off power to coil.

2. Disconnect wires from terminals.

3. Loosen four screws (15) that secure body to coil assembly.

4. Lift off coil (1) and replace with new coil.

5. Thread four screws (15) into new coil assembly (1) and uniformly tighten to secure body.

TO REPLACE DIAPHRAGMS AND SEAT WASHER:

1. Remove the four screws (15) that secure the lower diaphragm housing and separate coil assembly (1). Remove the lower diaphragm housing (14).

2. Remove spring (4) from armature (3).

3. Secure hole in armature (3) with 1/4" diameter rod or an allen wrench. Unscrew entire assembly with screwdriver secured in slot of lower diaphragm piston (13).

NOTE: Stem/Seat/Diaphragm/upper diaphragm housing assembly may unscrew at lower diaphragm piston (13) or at armature (3).

4. If lower diaphragm piston (13) unscrews, remove diaphragm (6) and washer (12) and inspect or replace as necessary. Remaining seat/upper assembly may be removed from top of polypropylene body (12) and disassembled by securing flats on stem (11) and unscrewing armature (3). Seat washer retainer (7) will then slide from the stem (11). Separate the upper diaphragm housing (2) and upper diaphragm from the seat washer retainer (7).

5. If armature (3) unscrews, remove the upper diaphragm housing (2) and the diaphragm (6). The seat washer retainer (7) slides off the stem (11) which allows the spacer (9) and seat washer (8) to be removed. The lower diaphragm piston (13) can be disassembled from the stem (11) by securing the stem with a wrench and unscrewing the lower diaphragm piston (13).

TO REASSEMBLE:

1. Reassemble seat washer retainer (7), seat washer (8) and spacer (9) onto stem (11).

2. Reassemble upper diaphragm (6) (*with "Fluid Side" marking facing valve body*), the upper diaphragm housing (2) and armature (3) onto stem end (11) and tighten securely against the seat washer retainer (7).

3. Insert the entire subassembly into valve body (10) from top. Screw lower diaphragm piston (13) with diaphragm (6) and washer (12) in proper order into bottom end of stem assembly. Tighten snugly with screwdriver.

4. Reinstall spring (4) over armature (3). Place coil assembly (1) on top of upper diaphragm housing (2).

MAINTENANCE

SOLENOID VALVE (Cont'd)

5. Position valve body subassembly and coil subassembly together.

6. Replace lower diaphragm housing (14). Secure coil assembly (1), body subassembly and lower diaphragm housing (14) using four screws (15). Care must be exercised to uniformly tighten the retaining screws (15).

7. Replace electrical connections. There is no positive or negative terminal.

STORAGE

FLUSH PUMP AFTER USE

One of the most common causes for faulty pump performance is "gumming" or corrosion inside the pump. Flush the pump and entire system with a solution that will chemically neutralize the liquid pumped. Mix according to manufacturer's directions. This will dissolve most residue remaining in the pump, leaving the inside of the pump clean for the next use.

TO PREVENT CORROSION

After cleaning the pump as directed above, flush it with a permanent type automobile antifreeze (Prestone, Zerex, etc.) containing a rust inhibitor. Use a 50% solution - that is, half antifreeze and half water, or fill pump with FLUID FILM and then drain it. A protective coating of FLUID FILM will remain on the inner pump surfaces. Save the excess FLUID FILM for the next application. Plug the ports to keep out air during storage. For short periods of idleness, non-corrosive liquids may be left in the pump, BUT AIR MUST BE KEPT OUT. Plug ports or seal port connections.

IMPORTANT: FREEZING TEMPERATURES MAY DAMAGE THE PUMP, FLOWMETER, THE MOTORIZED CONTROL VALVE, AND THE ELECTRIC SOLENOIDS IF THE WATER IS NOT DRAINED COMPLETELY!

Remove and clean the Flow Meter at the end of each spraying season. See page 17. Clean Flow Meter turbine and inlet hub. Clean off all metal filings and wettable powders which have hardened on the plastic and metal parts. Check the inlet hub and turbine assembly for worn or damaged turbine blades and bearings. Flush Flow Meter with clear water and drain.

IMPORTANT! When a high pressure washer or garden hose is used for cleaning, it is necessary to cover or otherwise protect the Control Console. Water entering the Control Console will cause serious damage, to the electronic system.

Remove the Control Console from the Vehicle for storage, or otherwise protect it from the elements.

Should the Control Console require service, refer to the serial number decal on the bottom of the console when requesting assistance or information from your TORO distributor.

SERVICING AFTER STORAGE:

Flush the entire spraying system with clean water and detergent.

Flush the entire spraying system again with clean, clear water to rinse.

Drain entire spraying system.

STORAGE AND DISPOSAL OF CHEMICALS:

Follow chemical manufacturer's recommendations for storage and disposal of chemicals.

PERFORMANCE VERIFICATION

Refer to the preceding information in this manual for complete and detailed instructions.
Follow all Safety Instructions .

Gallons Per Acre

Determine Desired Application Rate From Manufacturers Labeling _____ G.P.A.

Determine a Vehicle Application Speed _____ M.P.H.

Verify Nozzle Spacing is 20".

Determine Gallons Per Minute_____ G.P.M. **(See Nozzle Chart on Page 8)** and Use The Following Formula to verify.

$$\frac{\text{G.P.A. X M.P.H. X 20"}}{5940}$$

$$\frac{____ \times ____ \times 20}{5940} = \frac{____}{5940} = _____ \text{G.P.M.}$$

Select Nozzle Size **(See Nozzle Chart on Page 8)** _____based on G.P.M.

Determine Application Pressure_____ P.S.I. **(See Nozzle Chart on Page 8).**

Gallons Per 1,000 sq. ft.

Determine Desired Application Rate From Manufacturers Labeling _____ G.P. 1,000 sq. ft.

Determine a Vehicle Application Speed _____ M.P.H.

Verify Nozzle Spacing is 20"

Determine Gallons Per Minute_____ G.P.M. **(See Nozzle Chart on Page 8)** and Use The Following Formula to verify

$$\frac{\text{G.P. 1,000 sq. ft. X M.P.H. X 20"}}{136}$$

$$\frac{____ \times ____ \times 20}{136} = \frac{____}{136} = _____ \text{G.P.M.}$$

Select Nozzle Size **(See Nozzle Chart on Page 8)** based on G.P.M.

Determine Application Pressure_____ P.S.I. **(See Nozzle Chart on Page 8)**

Set Up Spray System

Set Parking Brake.
Fill tank ½ full with water **DO NOT** add Chemical at this time.
Install Correct Nozzles.
Open Suction, Bypass, and Agitation Valve Handles.
Program Pro Control™ Console
Drive Vehicle at Selected Spraying Speed _____ MPH.
Engage Pump.
Turn Booms On.
Visually Inspect The Output Of All Nozzles.
Record Engine RPM at Selected Spraying Speed, _____ RPM.
Verify Pro Control Will Hold Preset Rate At Selected Speed and 1 MPH [3 km/h].
Turn Booms Off.
Disengage Pump Lever.
Perform Rate Check.
High application rates may necessitate the reduction of bypass volume to maintain application pressure.

Rate Check

Verify G.P.A. application rate via **1/128th Acre Method**
Mark off a test course in a flat area at 204 feet.
Drive the Sprayer with a ½ full tank of water at selected **application speed** and record the time it takes to drive 204 feet. _____seconds. **NOTE: It is important to maintain your application speed during test.**

Rate Check (Cont'd)

Park Vehicle. **SET PARKING BRAKE.**
Engage pump, turn on all booms and maintain the same engine RPM used to drive the test course to maintain the application rate pressure.
Set Pro Control in Self Test Mode (enter your **application speed**).
Hold a graduated cylinder under the far left nozzle on the left boom. Collect the output for the same amount of time that it took to travel 204 ft.

Each ounce of fluid collected equals a 1 gallon per acre application rate.

Repeat collection test twice for each nozzle record amount collected each test below.
Proceed through each column separately and completely.

Each Nozzle Should Be Within ± 5% Of The Average Of All Nozzles
Replace Each Nozzle Not ± 5% Of The GPA Average Range
Replace All Nozzles If Two or More Are Not Within The ± 5% GPA Range

#1		**oz/GPA**
#2		**oz/GPA**
#3		**oz/GPA**
#4		**oz/GPA**
#5		**oz/GPA**
#6		**oz/GPA**
#7		**oz/GPA**
#8		**oz/GPA**
#9		**oz/GPA**
#10		**oz/GPA**
#11		**oz/GPA**
Total		
	÷11	
Average 1		**GPA**

#1		**oz/GPA**
#2		**oz/GPA**
#3		**oz/GPA**
#4		**oz/GPA**
#5		**oz/GPA**
#6		**oz/GPA**
#7		**oz/GPA**
#8		**oz/GPA**
#9		**oz/GPA**
#10		**oz/GPA**
#11		**oz/GPA**
Total		
	÷11	
Average 1		**GPA**

Both Averages Should Be Within 5% Of Each Other

CALCULATE RANGE

Gallons Per Acre

Average 1 _____ x .95 = [_____] = -5%

Average 1 _____ x 1.05 = [_____] = +5%

(GPA Range)

Your GPA Application Rate must fall within the GPA Range

Gallons Per 1,000 sq. ft.

Average 1 _____ x .95 = [_____] ÷ 43.56 = [_____] = -5% G.P. 1,000 sq. ft.

Average 1 _____ x 1.05 = [_____] ÷ 43.56 = [_____] = +5% G.P. 1,000 sq. ft.

(GPA Range) (GP 1,000 sq. ft. Range)

Your GP 1,000 sq. ft. Application Rate must fall within the GP 1,000 sq. ft. Range

CONTENTS

SAFETY INSTRUCTIONS ..... 1&2
- RECOGNIZE SAFETY INFORMATION 1
- BEFORE OPERATING: 1
- WHILE OPERATING: 2
- MAINTENANCE: 2
- SAFTEY & INSTRUCTION DECALS 3

INTRODUCTION 4
CONTROLS 4
CONSOLE FEATURES 5
BEFORE SPRAYING 6
- CONSOLE CALIBRATION: 6
  - CALCULATING “BOOM CAL” 6
  - CALCULATING “SPEED CAL” 6
  - CALCULATING “METER CAL” 6
  - CALCULATING “VALVE CAL” 6
  - CALCULATING “RATE1” AND “RATE 2” 6
  - FOUMULAS & SYMBOL DEFINITIONS: 7
- NOZZLE SELECTION 8
- CONSOLE PROGRAMMING: 10
  - DATA ENTRY: 10
  - INITIAL CONSOLE PROGRAMMING: 10
  - OTHER DISPLAY FEATURES: 11
  - SELF TEST FEATURE 11
  - DATA-LOCK ..... 11 & 12
  - POWER DOWN 12
  - CONSOLE ALARM 12
  - DISPLAY MENU: 12
  - LOW LIMIT FLOW & ALARM 12
  - CONTROL VALVE DELAY 12
  - INITIAL SYSTEM SET-UP: 13
  - INITIAL SYSTEM FIELD TEST: ..... 13 & 14
  - FILL THE CLEAN WATER WASH TANK 14

OPERATION 15
- USING THE SPRAYER: 15
- AFTER SPRAYING: 15

PREVENTIVE MAINTENANCE 16
MAINTENANCE 17
- FLOW METER: ..... 17 & 18
- SPEED SENSOR 18
- TROUBLESHOOTING GUIDE ..... 19 - 21
- CENTRIFUGAL PUMP TROUBLESHOOTING ..... 22 - 24
- MOTORIZED CONTROL VALVE 24
- TROUBLESHOOTING SOLENOID VALVE ..... 25 - 27

STORAGE 27
- FLUSH PUMP AFTER USE 27
- TO PREVENT CORROSION 27
- SERVICING AFTER STORAGE: 27
- STORAGE AND DISPOSAL OF CHEMICALS: 27

PERFORMANCE VERIFICATION 28
SET-UP SPRAY SYSTEM 28
RATE CHECK ..... 28 & 29
CALCULATE RANGE 29
CONTENTS 30
CONSOLE PROGRAMMING QUICK REFERENCE ..... 32 & 33



Helping you put quality into play. ®

WORKMAN® PRO CONTROL SPRAY SYSTEM INITIAL CONSOLE PROGRAMMING

When you first turn on Console power, after all installation procedures have been completed, the Console will flash "CAL" in the RATE display. This means you must "calibrate" or program the Console before it can be operated. (This is a one-time operation which does not have to be repeated. Turning OFF the POWER ON/OFF Switch does not affect the Console memory. All data is retained.)

The following steps must be followed:

If an entry selection error is made during steps 1,2 or 3, the Console can be reset by depressing SELF TEST for 20 seconds (data displays US.), on Console Model 063019531. On Console Model 063017269, turn power off, hold CE and power on at the same time to reset programming.

Step 1

Selecting US (Acres), SI [Hectares], or TU {1,000 Sq. Ft.}

(a) Momentarily depress CE until you reach the desired setting (US, SI or TU).

(b) Once the desired setting has been reached, momentarily depress ENTER to lock in your selection. The DATA display will now display SP1.

Step 2

Selecting SP1 & 3 (Wheel Drives, etc.) or SP2 (Radar Sensor).

NOTE: THE TORO WORKMAN® USES THE WHEEL DRIVE SETTING "SP1", THEREFORE YOUR ENTRY SHOULD BE SP1.

Momentarily depress CE until you reach the (SP1) setting, then momentarily depress ENTER to lock in your setting.

Step 3

Note: Step 3 may be needed on some Consoles. If not continue to back of this card.

Momentarily depress CE until you reach the (C-Sd) setting.

Momentarily depress ENTER to lock in your setting.

Refer to the back of this card to complete console programming.

Rev. 12/4/97 S.D.

WORKMAN®
PRO CONTROL SPRAY SYSTEM

Calibration numbers listed are <u>for reference only</u>. Before spraying, check your sprayer to confirm the numbers used are correct.

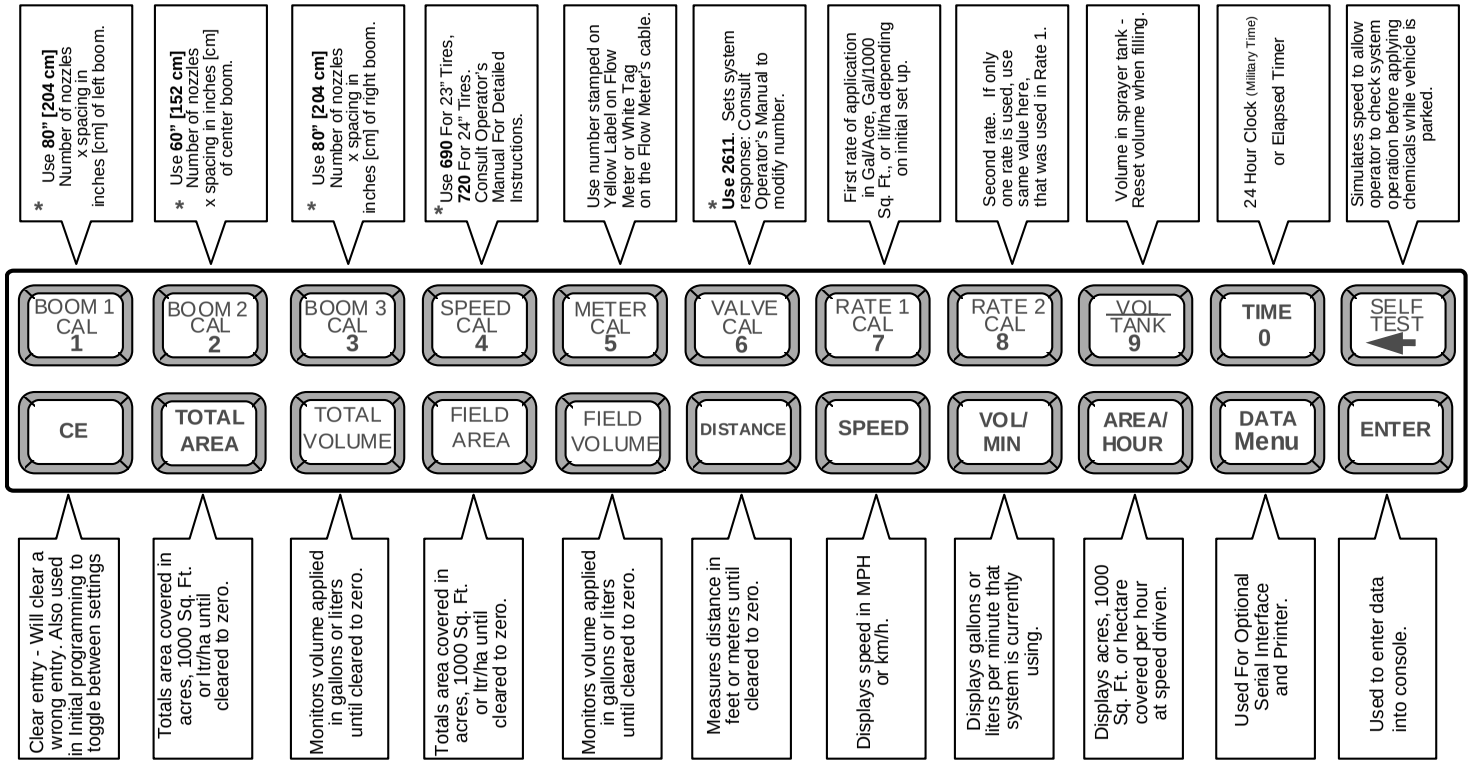

<u>Programming</u>

(1) Depress the key in which you wish to enter data (i.e. "Boom 1 Cal", "Speed Cal", etc.)
(2) Depress ENTER.
(3) Depress the keys corresponding to the number you wish to enter (i.e. "2", "4", etc.)
(4) Complete the entry by again depressing the ENTER key.

Consult Operator's Manual For Full Details on Set-Up and Operation

TORO®

NOTES:

NOTES:

The Toro Commercial Products Two Year Limited Warranty

The Toro Company warrants your 1996 or newer Toro Commercial Product ("Product") purchased after January 1, 1997, to be free from defects in materials or workmanship for the period of time listed below. Where a warrantable condition exists, Toro will repair the Product at no cost to you including diagnosis, labor , parts, and transportation. This warranty begins on the date the Product is delivered to the original retail purchaser.

Warranty Duration: Two years or 1500 operational hours*, whichever occurs first.
***Product equipped with hour meter**

Owner Responsibilities:

As the Product owner, you are responsible for required maintenance and adjustments stated in your Owner's Manual. Failure to preform required maintenance and adjustments can be grounds for disallowing a warranty claim.

Instructions for Obtaining Warranty Service:

You are responsible for notifying the Commercial Products Distributor or Authorized Commercial Products Dealer from whom you purchased the Product as soon as you believe a warrantable condition exists.

If you need help locating a Commercial Products Distributor or Authorized Dealer, or if you have questions regarding your warranty rights or responsibilities, you may contact us at:

TORO Commercial Products Service Department
8111 Lyndale Avenue South
Minneapolis, MN 55420-1196
Telephone: (612) 888-8801
Facsimile: (612) 887-8258
E-Mail: Commercial.Service@Toro.Com

Maintenance Parts:

Parts scheduled for replacement as required maintenance ("Maintenance Parts"), are warranted for the period of time up to the scheduled replacement time for that part.

Items/Conditions Not Covered:

Not all product failures or malfunctions that occur during the warranty period are defects in material or workmanship. The items / conditions listed below are not covered by this warranty:

- Product failures which result from the use of non-Toro replacement parts, or from installation and use of add-on, modified, or unapproved accessories are not covered.
- Product failures which result from failure to perform required maintenance and/or adjustments are not covered.
- Product failures which result from operating the Product in an abusive, negligent, or reckless manner are not covered.
- This warranty does not apply to parts subject to consumption through use unless found to be defective. Examples of parts which are consumed, or used up, during normal Product operation include, but are not limited to, blades, reels, bedknives, tines, spark plugs, castor wheels, tires, filters, belts, etc.
- This warranty does not apply to failures caused by outside influence. Items considered to be outside influence include, but are not limited to, weather, storage practices, contamination, use of unapproved coolants, lubricants, additives, or chemicals, etc.
- This warranty does not apply to normal "wear and tear" items. Normal "Wear and Tear" includes, but is not limited to, damage to seats due to wear or abrasion, worn painted surfaces, scratcheddecals or windows, etc.

Other Legal Disclaimers:

The above remedy of product defects through repair by an authorized distributor or dealer is the purchaser's sole remedy for any defect. This warranty gives you specific legal rights, and you may also have other rights which vary from state to state.

Except for the Emissions warranty referenced below, If applicable, there is no other express warranty. All implied warranties of merchantability and fitness for use are limited to the duration of the express warranty.

Some states do not allow limitations on how long an implied warranty lasts, so the above limitations may not apply to you.

The Toro Company is not liable for indirect, incidental or consequential damages in connection with the use of the Product, including any cost or expense of providing substitute Product or service during periods of malfunction or non-use.

Some states do not allow the exclusion of incidental or consequential damages, so the above exclusion may not apply to you.

Note to California residents: The Emissions Control System on your Product may be covered by a separate warranty meeting requirements established by the U.S. Environmental Protection Agency (EPA), or the California Air Resources Board (CARB). The hour limitations set forth above do not apply to the Emissions Control System Warranty. Refer to the California Emission Control Warranty Statement printed in your Owner's Manual or contained in the engine manufacturer's documentation for details.