FORM NO. 95-9302

TORO

MODEL NO. 41080-80001 & UP
MODEL NO. 41021-80001 & UP
MODEL NO. 41220-80001 & UP
MODEL NO. 41223-80001 & UP
MODEL NO. 41222-80001 & UP

OPERATOR'S MANUAL

MANUAL SPRAY SYSTEM

FOR THE WORKMAN® 3000 VEHICLE

To assure maximum safety, optimum performance, and to gain knowledge of the product, it is essential that you or any other operator of this Vehicle read and understand the contents of this manual before the engine is ever started. Pay particular attention to the SAFETY INSTRUCTIONS highlighted by this symbol —

The safety alert symbol means CAUTION, WARNING or DANGER — personal safety instruction. Failure to comply with the instruction may result in personal injury.

SAFETY INSTRUCTIONS

Keep this Operator's Manual in the plastic tube behind the operator seat.

It is very important that all persons operating this equipment have easy access to these instructions at all times!

Carefully read and follow the "set-up" instructions that are provided with this equipment and the Safety Instructions in the Workman Operator's Manual.

RECOGNIZE SAFETY INFORMATION

This safety-alert symbol is used to call attention to a **dangerous** situation, which could result in serious injury or death to the operator or a bystander.

Safety, mechanical and some general information in this manual are emphasized. **DANGER, WARNING** and **CAUTION** identify safety messages. Whenever the triangular safety symbol appears, it is followed by a safety message that must be read and understood. For more details concerning safety, read the Safety Instructions on pages 3 and 4. **IMPORTANT** identifies special mechanical information and **NOTE** identifies general information worthy of special attention.

These instructions are provided as a guide for the safe operation and maintenance of this equipment. However, the operator's personal safety, as well as those persons in the work area, will depend on the careful actions and good judgement of the operator. **To reduce the potential for injury or death, comply with the following safety instructions.**

BEFORE OPERATING:

1. Operate this machine only after reading and understanding the contents of this manual. A replacement manual is available by sending complete model and serial number to: The Toro Company, 8111 Lyndale Ave. South, Minneapolis, Minnesota 55420.

2. Learn how to operate the Sprayer and how to use the controls properly. DO NOT let anyone operate this equipment without first receiving thorough instructions.

3. Keep all shields, safety devices and decals in place. If a shield, safety device or decal is malfunctioning, illegible or damaged, repair or replace it before operating the machine.

4. Chemicals can injure persons, animals, plants, soils or other property. To eliminate environmental damage and personal injury:

A. Select the proper chemical for the job.

©The TORO Company - 1998
All Rights Reserved

SAFETY INSTRUCTIONS

B. Follow manufacturer's instructions on chemical container labels. Apply and handle chemicals as recommended.

C. Handle and apply chemicals with care. Wear goggles and other necessary protective equipment. Handle chemicals in well ventilated areas. Never smoke while handling chemicals.

D. Properly dispose of chemical container and unused chemicals.

WHILE OPERATING:

5. Drive the vehicle safely.

A. Always SLOW the vehicle when approaching and while making a turn.

B. Always SLOW the vehicle when driving in unfamiliar areas or over rough terrain.

C. Always SLOW the vehicle when changing the direction of travel or preparing to stop.

D. When turning or driving on slopes, always SLOW the vehicle, then turn the vehicle to prevent loss of control and possible upset.

E. DO NOT make sudden or sharp turns. DO NOT suddenly change direction of travel on an incline, ramp, grade, slope or similar surface.

F. Always adjust the vehicle speed to allow for existing conditions such as wet, slick surfaces, low visibility, etc.

G. Be especially careful when driving a heavily loaded vehicle down an incline or slope. Drive the vehicle UP and DOWN the face of the slopes, inclines or grades whenever possible. DO NOT DRIVE ACROSS the face if at all possible. There is a risk of upsetting the vehicle, which can result in serious injury or death.

6. DO NOT OVERLOAD THE VEHICLE. Failure to position loads carefully can result in their shifting or tipping over. Distribute loads evenly, keeping them as low as possible to prevent them from becoming top-heavy.

7. Make certain everyone is clear of the machine before starting the engine to move the vehicle or to engage the Sprayer Pump drive.

8. Before backing up, look to the rear and assure no one is behind. Back up slowly.

9. Watch out for traffic when near or crossing roads. Always yield the right of way to pedestrians and other vehicles.

10. If equipment begins to vibrate abnormally, stop **immediately**. Shut off the vehicle engine and disengage all power. Repair all damage before commencing operation.

MAINTENANCE:

11. Before servicing or making any adjustments to the Sprayer:

A. Stop the transport vehicle and set the parking brake.

B. Shut off the vehicle's engine and remove key from ignition.

C. Disengage all power and wait until all moving parts have stopped.

12. Keep all nuts, bolts and other fasteners tightened securely. Replace any shields removed during servicing or adjustments.

13. To be sure of optimum performance and safety, always purchase genuine TORO replacement parts and accessories. Replacement parts and accessories made by other manufacturers could be dangerous. Altering this equipment in any manner may affect the machine's operation, performance, durability or its use may result in injury or death. Such use could void the product warranty of the TORO Company.

SAFETY AND INSTRUCTION DECALS



(Part No. 36-3400) Top of Radiator Cover

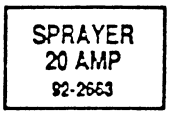

(Part No. 92-2663) Under dash below Fuse Block

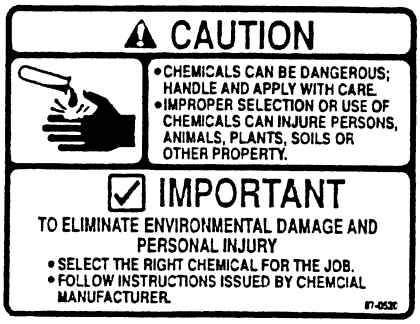

(Part No. 87-0520) On top of Tank Lid



(Part No. 87-0570) On rear Tank Band

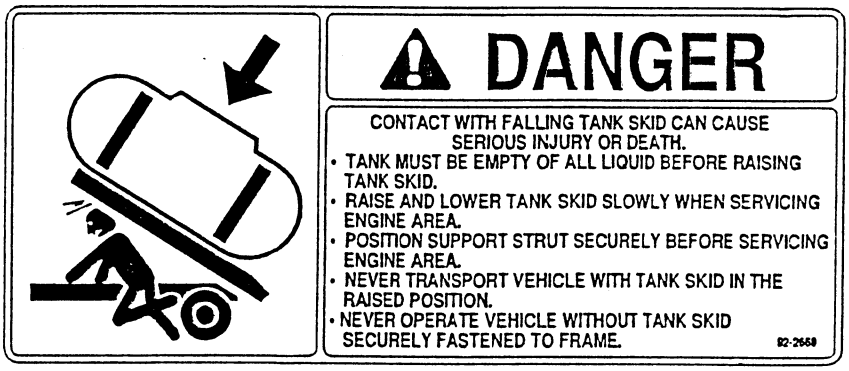

(Part No. 92-2669) On skid side rail next to Prop



(Part No. 75-5190) Top of Radiator Cover

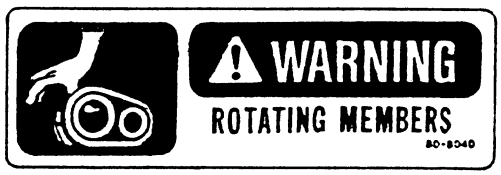

(Part No. 80-8040) Top of Radiator Cover

CONTROLS and OPERATION

NOTE: "Right", "Left", "Front" and "Rear" are referenced while seated in the operator's position.

ELECTRIC CLUTCH/PUMP SWITCH (FIG 1): This switch located on the lower dash panel, when moved to the "ON" position, engages the pump drive belt. Move the switch to the "OFF" position to disengage the pump drive belt.

PRESSURE ADJUST SWITCH (FIG 1): Hold to INCREASE or DECREASE spraying pressure to desired level. Located on Control Console.

MASTER ON/OFF SWITCH (FIG 1): Activates all three Boom Valves to control the flow of spray solution to the Boom sections. Located on Control Console.

INDIVIDUAL BOOM ON/OFF SWITCHES (FIG 1): Allows individual selection of Boom sections and controls the flow of spray solution to left (Boom #1), center (Boom #2) or right (Boom #3) Booms.

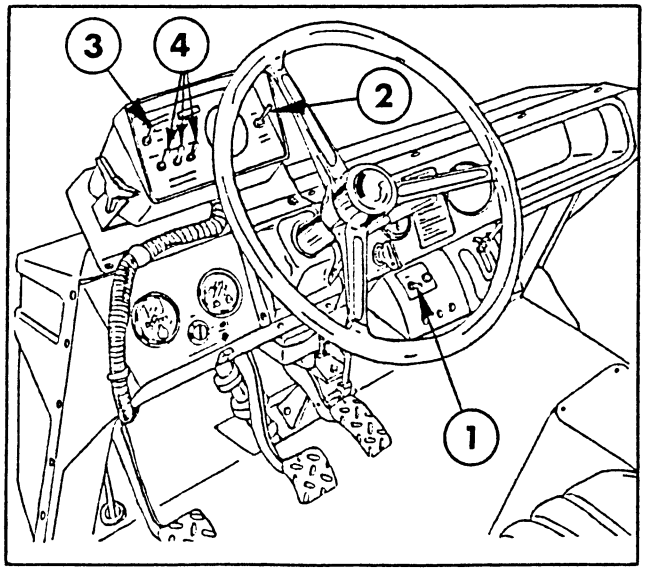

FIG. 1
1. Electric Clutch/Pump Switch
2. Pressure Adjust Switch
3. Master On/Off Switch
4. Individual Boom On/Off Switches

JET AGITATOR VALVE HANDLE (FIG 2): Opens and closes the Agitator Valve to activate, adjust or stop the agitation of the spray solution in the Tank.

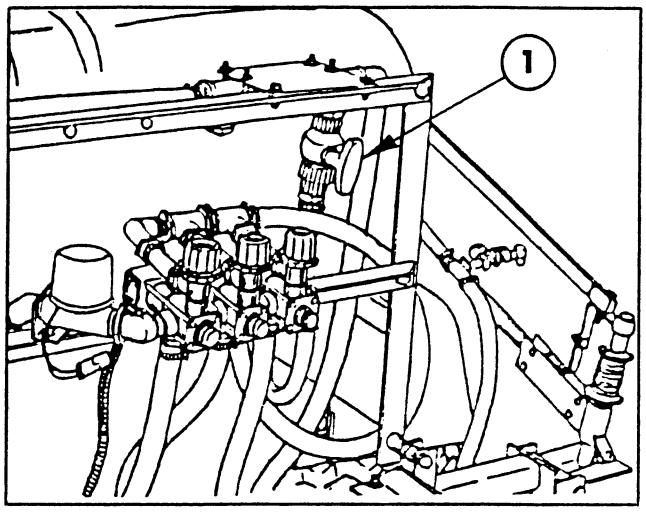

FIG. 2
1. Jet Agitator Valve Handle

BEFORE OPERATION:
Check all of your equipment...make certain that all components are clean...including the Tank, Pump, Control Valves, Strainers, Check Valves, Hoses, Nozzles, Spray Tips and Suction Line Strainer.

NOZZLE SELECTION:
To achieve the desired application rate from your Sprayer (as indicated on the chemical container label) the proper capacity Nozzles must be installed.

To select the proper Nozzle, you need to know:

- Application rate in gallons per acre.
- The Sprayer speed in miles per hour.
- The nozzle spacing (standard spacing is 20 inches.)

Next, refer to the Nozzle Charts in the sprayer catalog provided, for selecting the proper size nozzles to deliver the correct application rate at a chosen speed within a desired pressure range.

USEFUL FORMULAS

$$\text{G.P.M. (Per Nozzle)} = \frac{\text{G.P.A. x M.P.H. x W*}}{5940}$$

$$\text{G.P.A.} = \frac{5940 \times \text{G.P.M. (Per Nozzle)}}{\text{M.P.H. x W*}}$$

W* - Nozzle spacing (in boom spraying) or spray swath (in boomless spraying)...in inches.

OPERATION

SYSTEM SET-UP:

1. Fill the Tank with clean, clear water.

IMPORTANT: Do not operate the pump dry. Damage will result to the pump seals if the pump is operated dry. Be certain the suction line valve is "OPEN" before engaging the pump.

2. Take the vehicle out of gear and set the parking brake. Move Electric Clutch Switch to "OFF" position (refer to Workman Operator's Manual). Start the engine and set the throttle at 3/4 to full RPM to represent your desired spraying speed. (AN ASSISTANT MAY BE NEEDED FOR THIS PROCEDURE.)

3. Engage the pump by turning the pump engagement switch to the "ON" position. Check that the agitator valve is open.

4. Set the pressure gauge to the desired operating pressure by using the pressure adjust switch on the console.

At this point, the throttling valves must be adjusted. This is accomplished as follows:

5. With all three boom sections "ON", switch Boom #1 to "OFF". You will notice a change in pressure at the gauge. Loosen the locking ring on the Boom #1 throttling valve and turn the adjusting cap until the desired pressure setting is reached. Tighten the locking ring. Switch Boom #1 "ON".

6. With Boom #1 and Boom #3 "ON", switch Boom #2 to "OFF" and adjust the Boom #2 throttling valve to the desired pressure setting as described above. Switch Boom #2 "ON".

7. With Boom #1 and Boom #2 "ON", switch Boom #3 to "OFF" and adjust the Boom #3 throttling valve as described above. Switch Boom #3 "ON".

To double check these settings, switch the boom sections ON and OFF individually. Verify that the pressure does not change at the gauge.

NOTE: Repeat this entire procedure whenever changing to a different operating pressure.

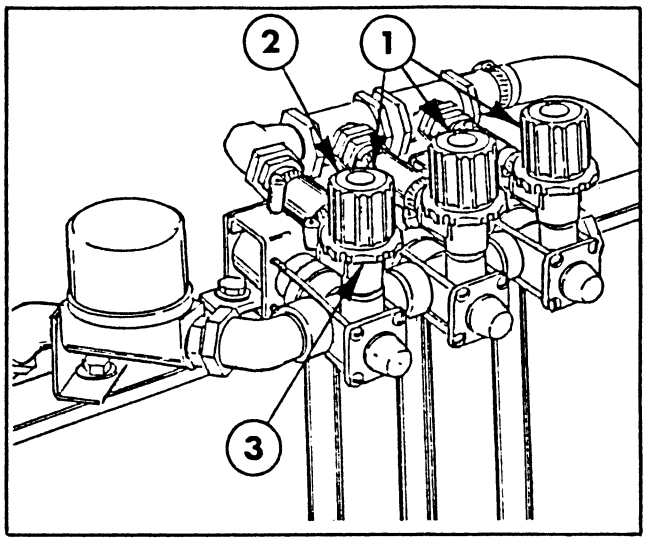

FIG. 3
1. Throttling Valve
2. Adjusting Cap
3. Locking Ring

FILLING THE SOLUTION TANK:

IMPORTANT: Do not add chemical to the Tank until just before use. Follow the chemical manufacturer's instructions for mixing the spray solution, to obtain desired application rate and effect.

⚠ CAUTION!

Chemicals can be dangerous! Read carefully the directions printed on the chemical manufacturer's labels before handling chemicals. Instructions on chemical manufacturer's container labels, regarding mixing proportions, should be read and strictly followed. The concentrate should not be poured into an empty Tank: fill Tank about one-half full with clean, clear water, add chemical concentrate and finish filling Tank with water.

Keep spray material from skin. If spray material comes in contact with body, wash it off immediately with clean water and detergent.

Always wear protective goggles and other protective equipment as recommended by chemical manufacturer.

OPERATION

FILLING THE SOLUTION TANK: (Cont'd)

1. Most chemicals are heavier than the water to which they are introduced.

2. Fill the spray tank 1/2 full with clear water from a clean source.

3. Start vehicle and turn on pump with booms off and by-pass fully open.

4. Begin adding the chemicals very gradually, allowing the pump and agitation to fully mix the chemicals.

5. Fill the remainder of the tank with clear water.

USING THE SPRAYER:

IMPORTANT: Do not operate the pump dry. Damage will result to the pump seals if the pump is operated dry. Be certain the suction line valve is "OPEN" before engaging the pump.

1. Operate the vehicle engine at full (or nearly full) throttle to provide the necessary ground speed, pressure and volume.

2. Engage the Pump and use the Master ON/OFF Switch and individual Boom Switches, to control Boom sections.

3. Regulate pressure with the Pressure Adjust Switch.

AFTER SPRAYING:
Flush the entire spraying system with clear water and a flushing agent after each spray job. Failure to clean the system can result in a chemical residue which can seriously damage the Centrifugal Pump and plug the Valves, Hoses and/or Nozzle Tips.

MAINTENANCE

Wash spray tips thoroughly with water. Blow out orifice, clean and dry. If orifice remains clogged, clean it with a soft bristled brush...never use a metal object.

SUCTION STRAINER:

Turn off Suction Line Valve if Tank is full of spray solution. Remove the cap and clean the strainer screen daily when spraying wettable powders - after every 50 hours when using liquid chemical.

IMPORTANT: Do not operate the pump dry. Damage will result to the pump seals if the pump is operated dry. Be certain the suction line valve is "OPEN" before engaging the pump.

Preventive maintenance will pay off many times over in peak performance and efficient operation.

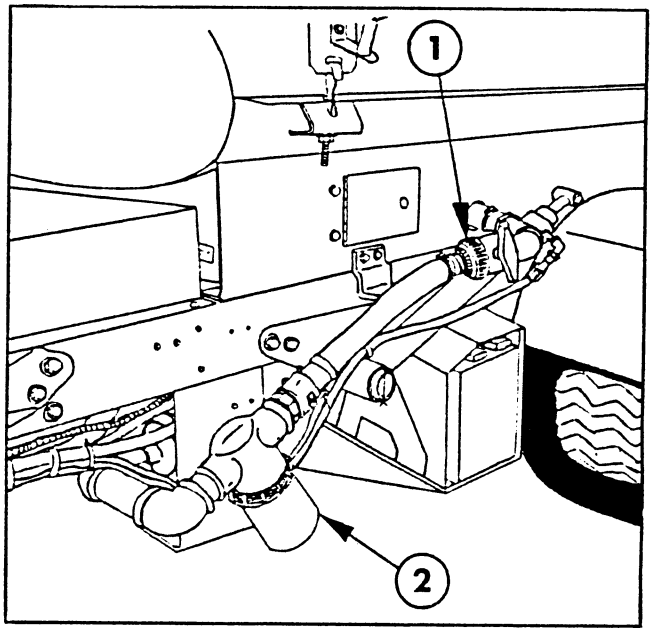

FIG. 4

1. Suction Line Valve
2. Suction Strainer

SEAL PROBLEM TROUBLESHOOTING

Trouble	Probable Cause	Remedy
1. Cracked or broken stationary seat (Ceramic)	Seal ran dry and heated up. When liquid reached seal faces was cooler, causing thermal cracks.	Check to insure seal chamber is full of liquid before starting pump. On high temperature application insure proper flushing at seal faces.
2. Carbon washer scored grooved.	Dirty System.	Have system cleaned and flushed and consider and consider installation of abrasive separator.
3. Carbon washer worn unevenly.	Seal improperly installed.	Check installation instructions for proper assembly.
4. Rubber bellows of seal are hard and brittle Rapid carbon wear.	Did pump run dry or cavitate.	Check to insure seal chamber is full of liquid before starting pump.
5. Retainer drive tabs badly worn or broken.	Periodic loss of lubrication at seal faces.	Insure proper flushing at seal faces.
6. Flexible bellows broken.	Seal improperly installed.	Check installation instructions for proper assembly.
7. Seal wears out shaft.	Check bearings for shaft end play. Check bearings for shaft radial movement. Check shaft straightness.	Replace bearings. Replace shaft.

MAINTENANCE

PROCEDURES FOR REPLACING THE SHAFT BEARINGS AND SEAL IN THE TORO CENTRIFUGAL SPRAYER PUMP

WARNING!

Before servicing or making any adjustments to the Sprayer, stop the transport vehicle and set the parking brake. Shut off the vehicle's engine and remove key from ignition. Disengage all power and wait until all moving parts have stopped.

To service the bearings (12), take the volute (1) and the impeller (7) off the shaft (10). The impeller (7) is held on the shaft (10) by a cap screw (3) in the end of the shaft and there is a key (8) to prevent it from spinning. Then take the rear housing lockring (13) out of the housing. Push the shaft (10) out and take the bearings (12) off the shaft. Be sure the shaft lockrings (11) are not crushed or broken. Press the new bearings (12) on the shaft, being careful to press against the inner raceway, so as not to damage them. You are now ready to reassemble the pump.

To service the seal (6) take the volute (1) off the housing (9). Take the capscrew (3) out of the end of the shaft (10). Pull the impeller (7) off the shaft, then carefully remove the old seal head and seat, taking care not to scratch the shaft or seal counterbore.

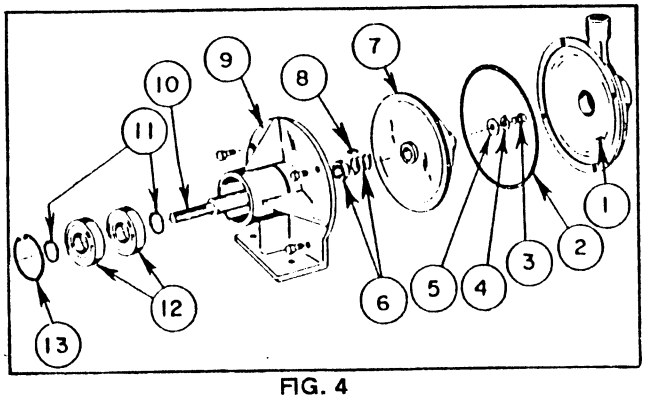

FIG. 4

1. Volute
2. O-Ring
3. Cap Screw
4. Lock Washer
5. Flat Washer
6. Shaft Seal
7. Impeller
8. Square Key
9. Housing
10. Shaft
11. Lock Ring
12. Bearing
13. Lock Ring

Clean the shaft and counterbore surfaces using fine steel wool. If there is any pitting or roughness within 1-3/8" of the end of the shaft, the shaft should be replaced.

Lightly grease the seal counterbore and hand press the new seat into this cavity. Replace the shaft into the frame, and secure with lockrings.

To replace the seal head, a piece of pipe or tubing should be used that will fit over the 3/4" diameter portion of the shaft. It is very important that this piece of tubing have an inside diameter of no larger than 13/16".

After lightly oiling the shaft, start the seal head by hand. Now using the tubing, push the seal down the shaft until the carbon face contacts the ceramic face. It is important that the two faces be completely clean and grease free. SEAL SURFACES SHOULD NOT BE LUBRICATED!

By pushing against the small diameter ring on the seal head; as you have done, you should not have any problems. However, if you push the seal head down the shaft by the large diameter portion, you may separate the seal and split the bellows. This will make the seal leak immediately.

You are now ready to reassemble the remaining components of the pump according to the parts diagram. With proper care this pump will give you many years of service.

MAINTENANCE

TROUBLESHOOTING THE 42871 SOLENOID VALVE

CONDITION	POSSIBLE CAUSES	HOW TO CHECK
1. Valve won't open	**A.** No electrical power to valve	Manually activate valve. If stem moves freely, check and clean electrical connections. Inspect electrical system.
	B. Stroke too long	Energize coil. Check length of stroke - should be approximately 1/8". If not, reset stroke.
	C. Stem movement restricted	Manually activate stem by pushing on lower diaphragm piston. If more than 5 lbs. of force is required to move stem, disassemble valve, inspect and clean all parts.
2. Valve won't shut off	**A.** Spring malfunction	Manually activate stem. Stem should offer 2-6 lbs. resistance, but movement should be quick and smooth. If there is very little resistance, disassemble and check spring.
	B. Stem movement restricted	Manually activate stem by pushing on lower diaphragm piston. If more than 5 lbs. of force is required to move stem, disassemble valve, inspect and clean all parts. Replace any damaged or worn parts with new ones.
	C. Seat washer blown out of retainer due to excessive pressure	Remove stem from valve body and inspect condition of seat washer.
	D. Seat washer worn or damaged	Replace seat washer.
3. Leakage around coil or around lower diaphragm piston.	**A.** Ruptured diaphragms	Disassemble valve and replace diaphragms with new ones.
4. Blowing fuses	**A.** Short circuit in power	Inspect wires for worn insulation and check connections.
	B. Short within the coil	Remove connections from coil and activate switch, making sure connections don't touch. If fuse doesn't blow, replace coil.
5. Valve operating properly, but pressure drop too high.	**A.** Not getting full stroke	Energize coil. Check length of stroke - should be approximately 1/8". If not, remove coil and check for obstructions between armature and armature stop. If clean, reset stroke.
	B. Obstruction in valve body	Remove inlet and outlet connections and inspect body.

STORAGE

Flush the entire spraying system with clear water. Drain the entire spraying system thoroughly, and run some antifreeze through the entire spraying system. This will act as a lubricant and prevent freeze-ups in the system components. FREEZING TEMPERATURES MAY DAMAGE THE PRESSURE REGULATING VALVE AND THE ELECTRIC SOLENOIDS IF WATER IS NOT DRAINED COMPLETELY!

SERVICING AFTER STORAGE:

Flush the entire spraying system with clean water and detergent.

Flush the entire spraying system again with clean, clear water to rinse.

Drain entire spraying system.

STORAGE AND DISPOSAL OF CHEMICALS:

Follow chemical manufacturer's recommendations for storage and disposal of chemicals.

FINDING CORRECT NOZZLE SIZE

US FORMULA:

$$G.P.M.\ (\text{Per Nozzle}) = \frac{G.P.A. \times M.P.H. \times 20"}{5940}$$

TU (Turf) FORMULA:

$$G.P.M.\ (\text{Per Nozzle}) = \frac{G.P.K. \times M.P.H. \times 20"}{137}$$

SI (METRIC) FORMULA:

$$lit/min\ (\text{Per Nozzle}) = \frac{lit/ha \times km/h \times 50\ cm}{60{,}000}$$

Liters Per Hectare Application Rates

TORO Part No.	Nozzle Number / Color Code	Pressure (kPa)	Capacity 1 Nozzle (L/min)	Liters per Hectare at 50 cm Spacings							
				4 km/h	5 km/h	6 km/h	7 km/h	8 km/h	9 km/h	10 km/h	11 km/h
95-9221	TTJ02 Yellow	150	0.53	159	127	106	91	80	71	64	58
		200	0.64	192	154	128	110	96	85	77	70
		275	0.76	228	182	152	130	114	101	91	83
		350	0.83	249	199	166	142	125	111	100	91
95-9222	TTJ04 Red	150	1.06	318	254	212	182	159	141	127	116
		200	1.32	396	317	264	226	198	176	158	144
		275	1.51	453	362	302	259	227	201	181	165
		350	1.70	510	408	340	291	255	227	204	185
95-9223	TTJ05 Brown	150	1.40	420	336	280	240	210	187	168	153
		200	1.61	483	386	322	276	242	215	193	176
		275	1.89	567	454	378	324	284	252	227	206
		350	2.13	639	511	426	365	320	284	256	232
95-9224	TTJ06 Grey	150	1.67	501	401	334	286	251	223	200	182
		200	1.93	579	463	386	331	290	257	232	211
		275	2.27	681	545	454	389	341	303	272	248
		350	2.56	768	614	512	439	384	341	307	279
95-9225	TTJ08 White	150	2.23	669	535	446	382	335	297	268	243
		200	2.58	774	619	516	442	387	344	310	281
		275	3.02	906	725	604	518	453	403	362	329
		350	3.41	1023	818	682	585	512	455	409	372
95-9188	TTJ10 Light Blue	150	2.79	837	670	558	478	419	372	335	304
		200	3.22	966	773	644	552	483	429	386	351
		275	3.78	1134	907	756	648	567	504	454	412
		350	4.28	1284	1027	856	734	642	571	514	467
95-9226	TTJ15 Light Green	150	4.18	1254	1003	836	717	627	557	502	456
		200	4.84	1452	1162	968	830	726	645	581	528
		275	5.67	1701	1361	1134	972	851	756	680	619
		350	6.40	1920	1536	1280	1097	960	853	768	698

FINDING CORRECT NOZZLE SIZE

Gallons Per Acre Application Rates

TORO Part No.	Nozzle Number / Color Code	Pressure (PSIG)	Capacity 1 Nozzle (GPM)	Gallons per Acre at 20" Spacings							
				2.5 MPH	3 MPH	3.5 MPH	4 MPH	4.5 MPH	5 MPH	5.5 MPH	6 MPH
95-9221	TTJ02 Yellow	20	0.14	16.6	13.9	11.9	10.4	9.2	8.3	7.6	6.9
		30	0.17	20.2	16.8	14.4	12.6	11.2	10.1	9.2	8.4
		40	0.20	23.8	19.8	17.0	14.9	13.2	11.9	10.8	9.9
		50	0.22	26.1	21.8	18.7	16.3	14.5	13.1	11.9	10.9
95-9222	TTJ04 Red	20	0.28	33	28	24	21	18	17	15	14
		30	0.35	42	35	30	26	23	21	19	17
		40	0.40	48	40	34	30	26	24	22	20
		50	0.45	53	45	38	33	30	27	24	22
95-9223	TTJ05 Brown	20	0.35	42	35	30	26	23	21	19	17
		30	0.43	51	43	36	32	28	26	23	21
		40	0.50	59	50	42	37	33	30	27	25
		50	0.56	67	55	48	42	37	33	30	28
95-9224	TTJ06 Gray	20	0.42	50	42	36	31	28	25	23	21
		30	0.52	62	51	44	39	34	31	28	26
		40	0.60	71	59	51	45	40	36	32	30
		50	0.67	80	66	57	50	44	40	36	33
95-9225	TTJ08 White	20	0.57	68	56	48	42	38	34	31	28
		30	0.69	82	68	59	51	46	41	37	34
		40	0.80	95	79	68	59	53	48	43	40
		50	0.89	106	88	76	66	59	53	48	44
95-9188	TTJ10 Light Blue	20	0.71	84	70	60	53	47	42	38	35
		30	0.87	103	86	74	65	57	52	47	43
		40	1.00	119	99	85	74	66	59	54	50
		50	1.12	133	111	95	83	74	67	60	55
95-9226	TTJ15 Light Green	20	1.06	126	105	90	79	70	63	57	52
		30	1.30	154	129	110	97	86	77	70	64
		40	1.50	178	149	127	111	99	89	81	74
		50	1.68	200	166	143	125	111	100	91	83

Gallons Per 1000 Sq. Ft. Application Rates

TORO Part No.	Nozzle Number / Color Code	Pressure (PSIG)	Capacity 1 Nozzle (GPM)	Gallons per 1000 Sq. Ft. at 20" Spacings							
				2.5 MPH	3 MPH	3.5 MPH	4 MPH	4.5 MPH	5 MPH	5.5 MPH	6 MPH
95-9221	TTJ02 Yellow	20	0.14	0.38	0.32	0.27	0.24	0.21	0.19	0.17	0.16
		30	0.17	0.46	0.39	0.33	0.29	0.26	0.23	0.21	0.19
		40	0.20	0.54	0.45	0.39	0.34	0.30	0.27	0.25	0.23
		50	0.22	0.60	0.50	0.43	0.37	0.33	0.30	0.27	0.25
95-9222	TTJ04 Red	20	0.28	0.76	0.63	0.54	0.48	0.42	0.38	0.35	0.32
		30	0.35	0.95	0.79	0.68	0.60	0.53	0.48	0.43	0.40
		40	0.40	1.09	0.91	0.78	0.68	0.60	0.54	0.49	0.45
		50	0.45	1.22	1.02	0.87	0.77	0.68	0.61	0.56	0.51
95-9223	TTJ05 Brown	20	0.35	0.95	0.79	0.68	0.60	0.53	0.48	0.43	0.40
		30	0.43	1.17	0.97	0.84	0.73	0.65	0.58	0.53	0.49
		40	0.50	1.36	1.13	0.97	0.85	0.76	0.68	0.62	0.57
		50	0.56	1.52	1.27	1.09	0.95	0.85	0.76	0.69	0.63
95-9224	TTJ06 Gray	20	0.42	1.14	0.95	0.82	0.71	0.63	0.57	0.52	0.48
		30	0.52	1.41	1.18	1.01	0.88	0.79	0.71	0.64	0.59
		40	0.60	1.63	1.36	1.17	1.02	0.91	0.82	0.74	0.68
		50	0.67	1.82	1.52	1.30	1.14	1.01	0.91	0.83	0.76
95-9225	TTJ08 White	20	0.57	1.55	1.29	1.11	0.97	0.86	0.78	0.70	0.65
		30	0.69	1.88	1.56	1.34	1.17	1.04	0.94	0.85	0.78
		40	0.80	2.18	1.81	1.55	1.36	1.21	1.09	0.99	0.91
		50	0.89	2.42	2.02	1.73	1.51	1.34	1.21	1.10	1.01
95-9188	TTJ10 Light Blue	20	0.71	1.93	1.61	1.38	1.21	1.07	0.97	0.88	0.80
		30	0.87	2.37	1.97	1.69	1.48	1.31	1.18	1.08	0.99
		40	1.00	2.72	2.27	1.94	1.70	1.51	1.36	1.24	1.13
		50	1.12	3.05	2.54	2.18	1.90	1.69	1.52	1.38	1.27
95-9226	TTJ15 Light Green	20	1.06	2.88	2.40	2.06	1.80	1.60	1.44	1.31	1.20
		30	1.30	3.54	2.95	2.53	2.21	1.96	1.77	1.61	1.47
		40	1.50	4.08	3.40	2.91	2.55	2.27	2.04	1.85	1.70
		50	1.68	4.57	3.81	3.26	2.86	2.54	2.28	2.08	1.90

The Toro Commercial Products Two Year Limited Warranty

The Toro Company warrants your 1996 or newer Toro Commercial Product ("Product") purchased after January 1, 1997, to be free from defects in materials or workmanship for the period of time listed below. Where a warrantable condition exists, Toro will repair the Product at no cost to you including diagnosis, labor , parts, and transportation. This warranty begins on the date the Product is delivered to the original retail purchaser.

Warranty Duration: Two years or 1500 operational hours*, whichever occurs first.
***Product equipped with hour meter**

Owner Responsibilities:

As the Product owner, you are responsible for required maintenance and adjustments stated in your Owner's Manual. Failure to preform required maintenance and adjustments can be grounds for disallowing a warranty claim.

Instructions for Obtaining Warranty Service:

You are responsible for notifying the Commercial Products Distributor or Authorized Commercial Products Dealer from whom you purchased the Product as soon as you believe a warrantable condition exists.

If you need help locating a Commercial Products Distributor or Authorized Dealer, or if you have questions regarding your warranty rights or responsibilities, you may contact us at:

TORO Commercial Products Service Department
8111 Lyndale Avenue South
Minneapolis, MN 55420-1196
Telephone: (612) 888-8801
Facsimile: (612) 887-8258
E-Mail: Commercial.Service@Toro.Com

Maintenance Parts:

Parts scheduled for replacement as required maintenance ("Maintenance Parts"), are warranted for the period of time up to the scheduled replacement time for that part.

Items/Conditions Not Covered:

Not all product failures or malfunctions that occur during the warranty period are defects in material or workmanship. The items / conditions listed below are not covered by this warranty:

- Product failures which result from the use of non-Toro replacement parts, or from installation and use of add-on, modified, or unapproved accessories are not covered.
- Product failures which result from failure to perform required maintenance and/or adjustments are not covered.
- Product failures which result from operating the Product in an abusive, negligent, or reckless manner are not covered.
- This warranty does not apply to parts subject to consumption through use unless found to be defective. Examples of parts which are consumed, or used up, during normal Product operation include, but are not limited to, blades, reels, bedknives, tines, spark plugs, castor wheels, tires, filters, belts, etc.
- This warranty does not apply to failures caused by outside influence. Items considered to be outside influence include, but are not limited to, weather, storage practices, contamination, use of unapproved coolants, lubricants, additives, or chemicals, etc.
- This warranty does not apply to normal "wear and tear" items. Normal "Wear and Tear" includes, but is not limited to, damage to seats due to wear or abrasion, worn painted surfaces, scratcheddecals or windows, etc.

Other Legal Disclaimers:

The above remedy of product defects through repair by an authorized distributor or dealer is the purchaser's sole remedy for any defect. This warranty gives you specific legal rights, and you may also have other rights which vary from state to state.

Except for the Emissions warranty referenced below, If applicable, there is no other express warranty. All implied warranties of merchantability and fitness for use are limited to the duration of the express warranty.

Some states do not allow limitations on how long an implied warranty lasts, so the above limitations may not apply to you.

The Toro Company is not liable for indirect, incidental or consequential damages in connection with the use of the Product, including any cost or expense of providing substitute Product or service during periods of malfunction or non-use.

Some states do not allow the exclusion of incidental or consequential damages, so the above exclusion may not apply to you.

Note to California residents: The Emissions Control System on your Product may be covered by a separate warranty meeting requirements established by the U.S. Environmental Protection Agency (EPA), or the California Air Resources Board (CARB). The hour limitations set forth above do not apply to the Emissions Control System Warranty. Refer to the California Emission Control Warranty Statement printed in your Owner's Manual or contained in the engine manufacturer's documentation for details.