FORM NO. 99-0553

TORO®

MODEL NO. 41411-30101 & UP
MODEL NO. 41020-30101 & UP
MODEL NO. 41120-30101 & UP
MODEL NO. 41021-30101 & UP

OPERATOR'S INSTRUCTIONS

SKID SPRAYER

To assure maximum safety, optimum performance, and to gain knowledge of the product, it is essential that you or any other operator of this equipment read and understand the contents of this manual before the vehicle engine is ever started. Pay particular attention to the SAFETY INSTRUCTIONS highlighted by this symbol—

The safety alert symbol means CAUTION, WARNING, or DANGER — personal safety instruction. Failure to comply with the instruction may result in personal injury.

SAFETY INSTRUCTIONS

Keep these Operator's Instructions and the Engine Manual in the plastic tube on the side of the Belt Guard.

It is very important that all persons operating this equipment have easy access to these instructions at all times!

Carefully read and follow the "set-up" instructions that are provided with this equipment . The installation of accessories on the TORO Skid Frame, other than those designated and sold for that express purpose by TORO, may adversely affect the performance and safety characteristics of this equipment.

RECOGNIZE SAFETY INFORMATION

This safety-alert symbol calls attention to a **dangerous** situation, which could result in serious injury or death to the operator or a bystander.

Safety, mechanical and some general information in this manual are emphasized. **DANGER, WARNING** and **CAUTION** identify safety messages. Whenever the triangular safety symbol appears, it is followed by a safety message that must be read and understood. For more details concerning safety, read the Safety Instructions that follow. **IMPORTANT** identifies special mechanical information and **NOTE** identifies general information worthy of special attention.

These instructions are provided as a guide for the safe operation and maintenance of this equipment. However, the operator's personal safety, as well as those persons in the work area, will depend on the careful actions and good judgement of the operator.
To reduce the potential for injury or death, comply with the following safety instructions.

BEFORE OPERATING:

1. Operate this attachment only after reading and understanding the contents of this manual. A replacement manual is available by sending complete model and serial number to: Hahn Equipment Co., 1625 N. Garvin, Evansville, IN. 47711.

2. Learn how to operate the Skid Sprayer and how to use the controls properly. DO NOT let anyone operate this equipment without first receiving thorough instructions.

3. Chemicals can injure persons, animals, plants, soils or other property. To eliminate environmental damage and personal injury:

A. Obtain proper training before using or handling chemicals.

B. Select the proper chemical for the job.

C. Follow manufacturer's instructions on chemical container labels. Apply and handle chemicals as recommended.

©The TORO Company - 1998
All Rights Reserved

D. Handle and apply chemicals with care. Wear goggles and other necessary protective equipment. Handle chemicals in well ventilated areas. Never smoke while handling chemicals.

E. Properly dispose of chemical container and unused chemicals.

4. To be sure of optimum performance and safety, always purchase genuine TORO replacement parts and accessories. Replacement parts and accessories made by other manufacturers could be dangerous. Altering the Skid Sprayer in any manner may affect the Skid Sprayer's operation, performance, durability or its use may result in injury or death. Such use could void the product warranty of the Toro Company.

5. This equipment should not be modified without the Toro Company's authorization. Direct any inquiries to:

Hahn Equipment Co.
1625 N. Garvin
Evansville, IN 47711

6. Keep all shields, safety devices and decals in place. If a shield, safety device or decal is defective, illegible or damaged, repair or replace it before operating the machine.

7. Since gasoline is highly flammable, handle it carefully.

A. Use an approved gasoline container.

B. Do not remove cap from fuel tank when engine is hot or running.

C. Do not smoke while handling gasoline.

D. Fill fuel tank outdoors and to about one inch below top of tank, (bottom of filler neck). Do not overfill.

E. Wipe up any spilled gasoline.

WHILE OPERATING:

Drive the transport vehicle safely.

WARNING

- **Attaching the Skid Sprayer to a vehicle changes the weight and handling of the vehicle, and could cause loss of control resulting in serious injury or death.**
- **Refer to the vehicle's operators' manual for safety information.**

1. DO NOT make sudden or sharp turns. DO NOT suddenly change direction of travel on an incline, ramp, grade, slope or similar surface.

2. Make certain everyone is clear of the machine before starting the engine to move the transport vehicle or to engage the Sprayer Pump drive.

3. Do not touch engine, muffler or muffler shield while engine is running or soon after it has stopped, because these areas may be hot enough to cause burns.

4. If equipment begins to vibrate abnormally, stop **immediately.** Shut off the Skid Sprayer engine and disengage all power. Repair all damage before commencing operation.

MAINTENANCE:

WARNING: Engine exhaust contains carbon monoxide which is an odorless, deadly poison. Carbon monoxide is also known to the State of California to cause birth defects. Do not run engine indoors or in an enclosed area.

1. Before servicing or making any adjustments to the Skid Sprayer:

A. Stop the transport vehicle and set the parking brake.

B. Shut off the Skid Sprayer's engine and pull wire off the spark plug. Make sure wire cannot contact plug accidentally.

C. Disengage all power and wait until all moving parts have stopped.

D. Keep hands, feet and clothing away from all power driven parts.

2. Keep all nuts, bolts and other fasteners tightened securely. Replace any shields removed during servicing or adjustments.

3. To reduce potential fire hazard, keep the engine area free of excessive grass, leaves and accumulation of dirt.

PRODUCT IDENTIFICATION



Located on the front left hand corner of the Skid Frame.



Located on the left hand engine shroud.

Skid Sprayer
Model No. 41410
Serial No. _____

Kohler Engine
Model No. CH6T
Serial No. _____

Record these serial numbers in the space above as soon as possible, as it is necessary to include this information when ordering service parts or requesting information. Please fill out the Product Registration Card and return it to:

The TORO Company
8111 Lyndale Ave. South
Minneapolis, MN 55420

Date Purchased _____

WARNING

The engine exhaust from this product contains chemicals known to the State of California to cause cancer, birth defects, or other reproductive harm.

SPARK ARRESTOR

When the machine is used or operated on any California forest, brush or grass covered land, a properly operating spark arrestor must be attached to the muffler. The operator is violating state law, Section 442 Public Resources Code if a spark arrestor is not used.

All information, illustrations and specifications in this manual are based on the latest product information available at the time of publication. The right is reserved to make changes at any time without notice.

SAFETY AND INSTRUCTION DECALS

The following decals are installed on the machine. If any become damaged or illegible, replace them. The decal part number is listed below and in your parts catalog. Replacement can be ordered from your Authorized Toro Distributor.

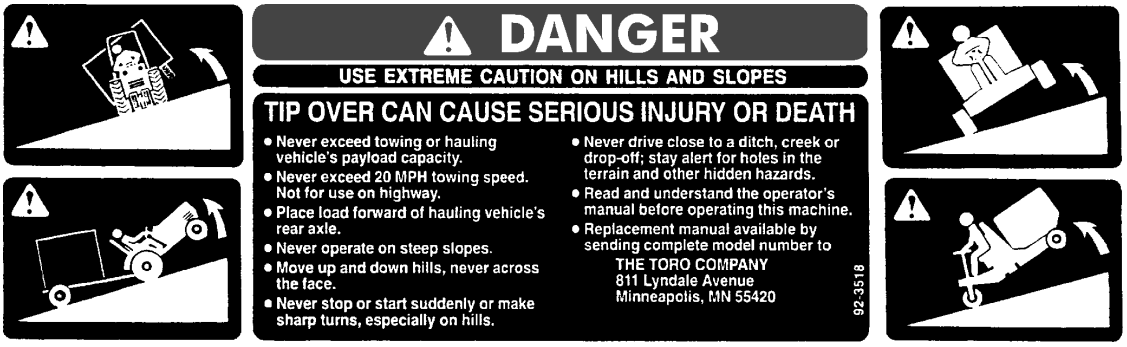

Part No. 92-3518; Located on Belt Shield



Part No. 65-3090; Located on top of Belt Gaurd.



Part No. 87-0450; Located on top of Drive Shaft Cover.

BEFORE OPERATING

FILL ENGINE CRANKCASE WITH OIL:

IMPORTANT! The Skid Sprayer is shipped from the factory **without oil** in the engine's crankcase.

1. Position the Skid Sprayer on a level surface.

2. Clean the area around the oil fill/check plug and remove it.

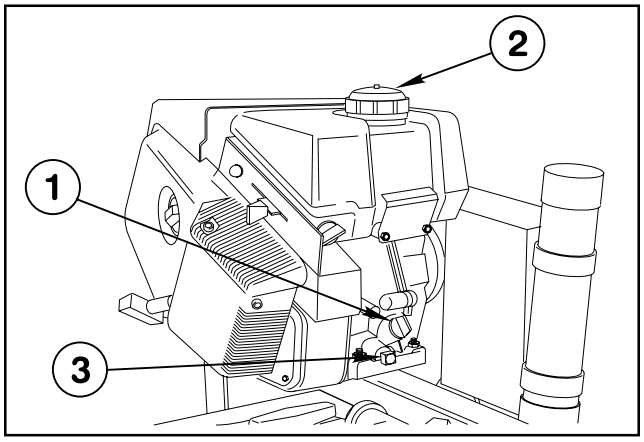

FIG. 1

1. Oil Fill/Check Plug
2. Fuel Tank Cap
3. Oil Drain

3. Insert a funnel into the oil fill tube and slowly pour engine oil into the crankcase. The engine uses any high-quality 30W oil having the American Petroleum Institute-API - "service classification" SF or SG. See viscosity chart for recommended weight to use. The capacity of the crankcase is approximately 23 ounces (.66L).

4. The level should be up to, but not over, the point of overflowing the filler neck.

5. Reinstall the oil fill/check plug and tighten securely. Make sure it is tightened to 13 ft. lbs. (17.6 N m) torque.

IMPORTANT! Check the oil level every five (5) operating hours or each time the engine is started. For a new engine, drain the oil and replace it after the first five (5) hours of operation: thereafter, under normal conditions, change oil after every 100 hours of operation. Change the oil more frequently when the engine is operated in dusty or dirty conditions.

FILL FUEL TANK WITH GASOLINE:

Fuel tank capacity is approximately 3 U.S. quarts (3.18 L).

⚠ DANGER

Because gasoline is flammable, caution must be used when storing or handling it. Do not fill fuel tank while engine is running, hot or when machine is in an enclosed area. Vapors may build up and be ignited by a spark or flame source many feet away. DO NOT SMOKE while filling the fuel tank to prevent the possibility of an explosion. Always fill fuel tank outside and wipe up any spilled gasoline before starting engine. Use a funnel or spout to prevent spilling gasoline, and fill tank to about 1/2 inch (13 mm) below the filler neck. Store gasoline in a cool, well-ventilated place; never in an enclosed area such as a hot storage shed. To ensure volatility, do not buy more than a 30 day supply of gasoline. Gasoline is a fuel for internal combustion engines; therefore, do not use it for any other purpose. Since many children like the smell of gas, keep it out of their reach because the fumes are explosive and dangerous to inhale.

1. Clean area around fuel tank cap so foreign matter cannot enter tank when cap is removed. See FIG. 1.

2. Remove cap from fuel tank and fill tank with unleaded gasoline to within 1/2" (13 mm) from top of tank. Then reinstall fuel tank cap.

3. Wipe up any gasoline that may have spilled.

CONTROLS

NOTE: "Right", "Left", "Front" and "Rear" are referenced while seated in the operator's position.

SUCTION LINE VALVE: Opens and closes the Suction Line, which draws spray solution from the Tank to the Pump. The Valve is OPEN when the lever is positioned as shown in FIG. 2.

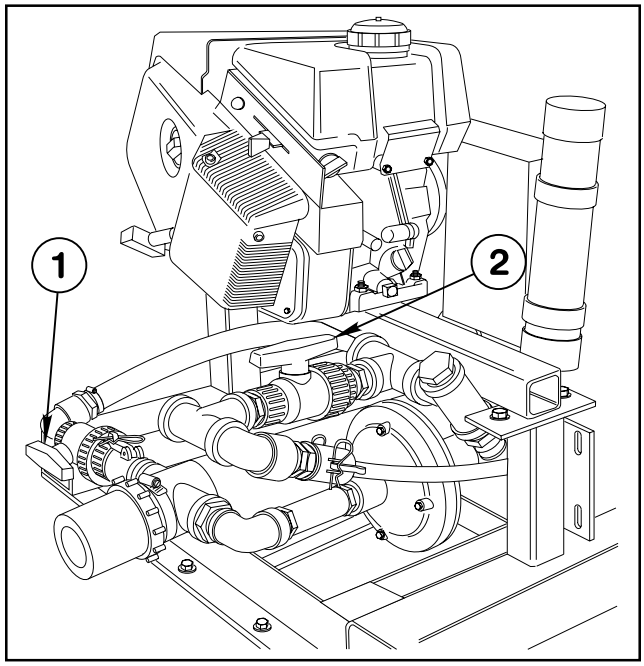

FIG. 2

1. Suction Line Valve (Open)

2. Agitator Valve (Open)

IMPORTANT! Be certain the Suction Line Valve is open and liquid has reached the Pump before the Pump is activated. The Pump will be damaged if it is allowed to run dry!

AGITATOR VALVE: Opens and closes the By-Pass Line to activate, adjust or stop the agitation of the spray solution in the Tank. The Agitator Valve must be OPEN when the pump is being used.

ELECTRIC SPRAY CONTROL SYSTEM: Controls the pressure and flow of spray solution to the Boom sections. See FIG. 3.

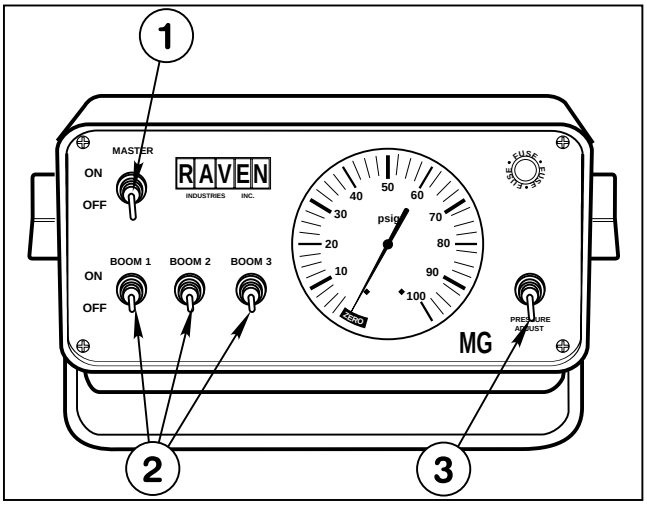

FIG. 3

1. Master on/off Switch
2. Individual on/off Switches
3. Pressure Adjust Switch

A. Pressure Adjust Switch: Hold to INCREASE or DECREASE spraying pressure to desired level.

B. Master ON/OFF Switch: Activates all three Boom Valves to control the flow of spray solution to the Boom sections.

C. Individual Boom ON/OFF Switches: Allows selection of individual Boom sections and controls the flow of spray solution to left (Boom #1), center (Boom #2) or right (Boom #3) Booms.

CONTROLS

IDLER ENGAGEMENT CHAIN: Used to bring the Idler Pulley into contact with the Drive Belt, creating tension to allow the engine to drive the pump . DO NOT DISENGAGE THE BELT WHILE THE ENGINE IS RUNNING!

CENTRIFUGAL PUMP SYSTEM SET-UP:

1. Install the Drive Belt on the Engine and Pump Pulleys as shown in FIG. 4.

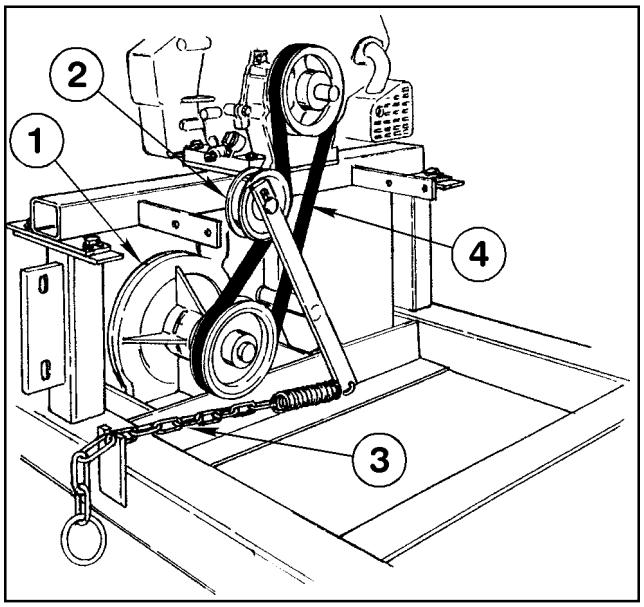

FIG. 4

1. Centrifugal Pump
2. Idler Pulley
3. Idler Engagement Chain
4. Drive Belt

2. Pull the Idler Engagement Chain to bring the Idler Pulley into contact with the Drive Belt. At the point of resistance by the Drive Belt, pull the Chain the distance of another two links and insert that link into the lug on the Skid Frame. See FIG. 4.

3. OPEN the Suction Line Valve and the Agitator Valve. See FIG. 2 on page 6.

IMPORTANT! Be certain the Suction Line Valve is open and liquid has reached the Pump before the Pump is activated. The Pump will be DAMAGED if it is allowed to run dry!

4. Fill the Tank with clean, clear water. Do NOT add chemical to the Tank until just before beginning to spray. Follow the chemical manufacturer's instructions for mixing the spray solution to obtain desired application rate and effect.

5. Start the Skid Sprayer's engine.

6. Turn "ON" the Master Boom Switch and all three individual Boom Switches.

7. Set the Pressure Gauge to the desired operating pressure.

FIG. 5

1. Throttling Valve/ Adjusting Cap
2. Locking Ring

At this point, the Throttling Valves must be adjusted. See FIG. 5. This is accomplished as follows:

8. With all three Boom sections "ON", switch Boom #1 to "OFF". You will notice a change in pressure at the Gauge. Loosen the Locking ring on #1 Boom's Throttling Valve and turn the Adjusting Cap until the original pressure setting is reached. Tighten the Locking Ring. Turn Boom #1 back on.

9. With all three Boom sections "ON", switch Boom #2 to "OFF" and adjust the #2 Boom's Throttling Valve to reset the original pressure. Turn Boom #2 back on.

10. With all three Boom sections "ON", switch Boom #3 to "OFF" and repeat this procedure for setting the #3 Boom's Throttling Valve.

To double check these settings, switch Boom sections ON and OFF. Verify that the pressure does not change at the Gauge.

NOTE: This entire procedure must be repeated whenever changing to a different operating pressure.

OPERATING INSTRUCTIONS

BEFORE STARTING THE ENGINE TO BEGIN THE DAYS SPRAYER APPLICATION:

1. Check the engine crankcase oil.
2. Check the Air Cleaner.
3. Check cooling air intake areas.
4. Check the fuel tank.

TAKE MACHINE TO WORK SITE:

1. Pull the Idler Engagement Chain to bring the Idler Pulley into contact with the Drive Belt. At the point of resistance by the Drive Belt, pull the Chain the distance of another two links and insert that link into the lug on the Skid Frame.

2. Fill the Sprayer Tank.

IMPORTANT! DO NOT add chemical to the Tank until just before use. Instructions on the chemical manufacturer's container labels, regarding mixing proportions, should be read and STRICTLY followed. The concentrate should not be poured into an empty Tank. Fill the Tank about one-half full with clean, clear water, add chemical concentrate and then finish filling the Tank with water.

3. OPEN the Suction Line Valve and Agitator Valve. See FIG. 2 on page 6.

START THE SKID SPRAYER'S ENGINE:

1. Open the fuel shut-off valve.

2. For a Cold Engine: Place the throttle control midway between the "slow" and "fast" positions. Place the choke control into the "on" position. Gradually return the choke control to the "off" position after the engine starts and warms up. See FIG.6.

For a Warm Engine: (normal operating temperatures) Place the throttle control midway between the "slow" and "fast" positions. Place the choke control into the "off" position.

3. Pull the Starter Handle with a smooth, steady motion. Pull the handle straight out to avoid excess rope wear.

NOTE: The TORO Skid Sprayer is designed to operate most effectively with the engine at full or nearly full 3,600 RPM.

STOPPING THE ENGINE:

1. Move the throttle control to the "off" position.

2. Close the fuel shut-off valve. See FIG. 6.

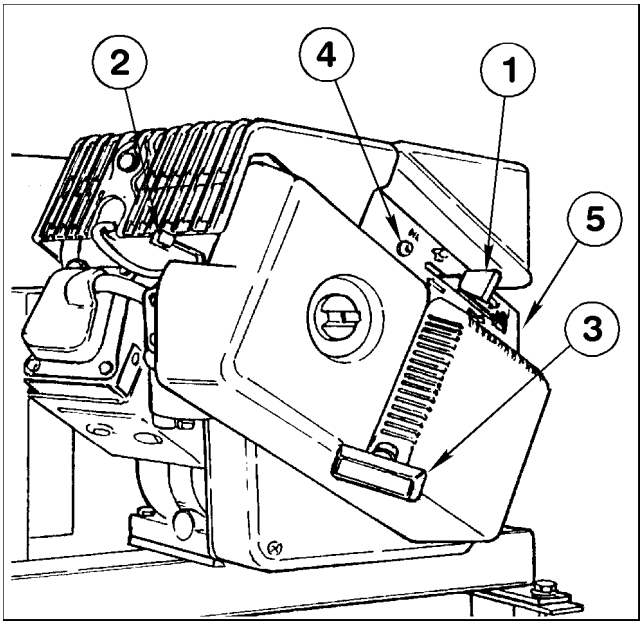

FIG. 6

1. Throttle Control
2. Choke Control
3. Starter Handle
4. Oil Sentry
5. Fuel Shut-off Valve

SPRAYING:
1. Place the Master ON/OFF Switch, on the Spray Control Console, at "ON".

2. Use the individual Boom Switches to activate the Boom Section (or Sections) to be used in the sprayer application.

3. Regulate the pressure with the Pressure Adjust Switch.

WHEN JOB IS COMPLETED:

Flush the entire spraying system with clear water and flushing agent after each spray job. Failure to clean the system can result in a chemical residue which will seriously damage the Pumps and plug the Control Valve, Hoses and Nozzle Tips.

Wash spray tips thoroughly with water or a cleaning solution that is appropriate for the chemical used. Blow out the orifice, clean and dry. If orifice remains clogged, clean it with a soft bristled brush...never use a metal object.

MAINTENANCE

MAINTENANCE SCHEDULE

These required maintenance procedures should be performed at the frequency stated in the table. They should also be included as part of any seasonal tune-up.

FREQUENCY	MAINTENANCE REQUIRED
Daily or Before Starting Engine	• Fill fuel tank. • Check oil level. • Check air cleaner for dirty[1], loose, or damaged parts. • Check air intake and cooling areas, clean as necessary[1].
Every 25 Hours	• Service precleaner element[1].
Every 100 Hours	• Service air cleaner element[1]. • Change oil. • Check spark plug condition and gap. • Remove cooling shrouds and clean cooling areas[1].
Annually or Every 500 Hours	• Have valve to rocker arm clearance checked[2]. • Have Oil Sentry™ float switch checked[2].

[1] Perform these maintenance procedures more frequently under extremely dusty, dirty conditions.

[2] Have a Kohler Engine Service Dealer perform these services.

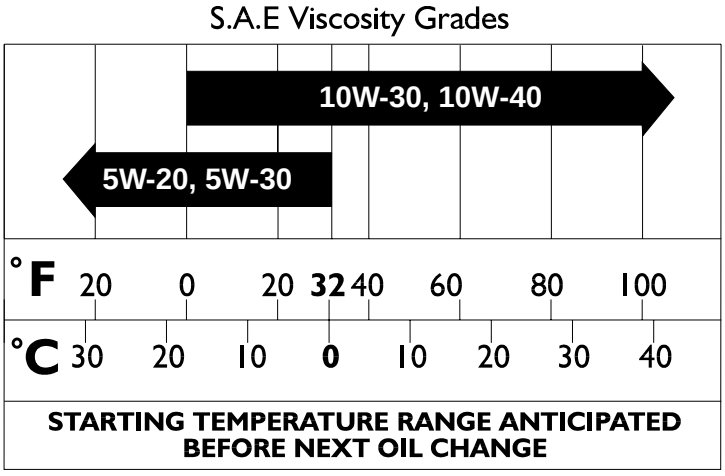

IMPORTANT! To prevent extensive engine wear or damage, always maintain the proper oil level in the crankcase. NEVER operate the engine with the oil level below the point of overflowing the filler neck.

MAINTENANCE

WARNING

- **Before servicing or making adjustments to the Skid Sprayer, stop the transport vehicle and set the parking brake. Shut off the Skid Sprayer engine.**
- **Pull wire off the spark plug to prevent the engine from being started.**

AFTER THE INITIAL RUN-IN PERIOD (APPROXIMATELY 5 HOURS):

1. Change the oil in the engine's crankcase as described below.

AFTER EVERY 10 HOURS OF OPERATION:

CHECK OIL LEVEL:

1. Make sure the engine is stopped, level, and is cool so the oil has had time to drain into the sump.

2. Clean the area around the oil/fill check plug and remove it.

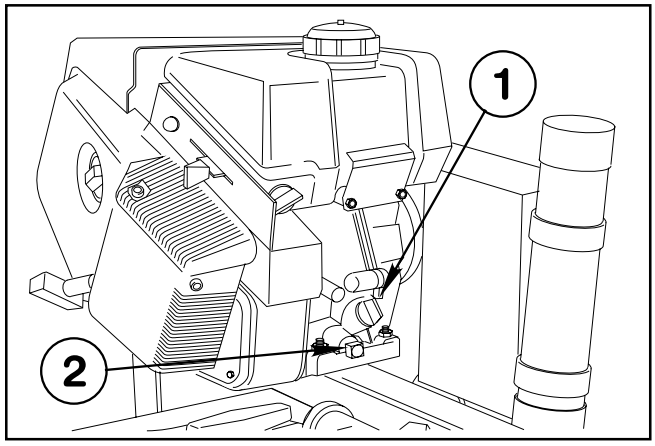

FIG. 13

1. Oil Fill/Check Plug **2.** Oil Drain

3. The level should be up to but not over, the point of overflowing the filler neck.

4. If the level is low, add API "service classification" SF or SG. See viscosity chart on page 9 for the recommended weight.

5. Reinstall the oil fill/check plug and tighten securely. Make sure it is tightened to 13 ft. lbs. (17.6 Nm) torque.

IMPORTANT! The Oil Sentry light will turn red when the engine oil is low, but the oil level should be checked BEFORE EACH USE.

SUCTION LINE STRAINER:

After every 50 hours of operation, or daily if spraying wettable powders:

1. Turn off the Suction Line Valve, if the Tank has been filled.

2. Remove the clear plastic bowl and clean the strainer screen.

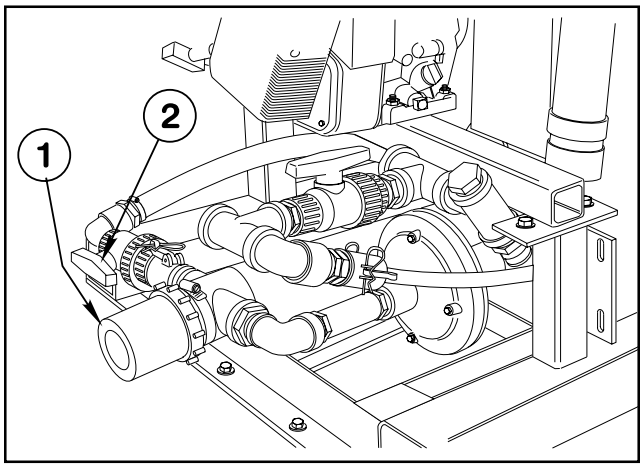

FIG. 14

1. Suction Line Strainer **2.** Suction Line Valve (Open)

IMPORTANT! Be certain the Suction Line Valve is OPENED and liquid has reached the Spray Pump, before the Pump is activated when spraying is resumed. The Spray Pump will be seriously damaged if it is allowed to run dry!

AFTER EVERY 100 HOURS OF OPERATION:

CHANGE OIL:

Change the oil while the engine is still warm. The oil will flow freely and carry away more impurities. Make sure the engine is level when filling, checking and changing the oil.

1. Remove the oil drain plug and the oil fill/check plug. Be sure to allow ample time for complete drainage.

2. Reinstall the drain plug. Make sure it is tightened to 13 ft. lbs. (17.6 Nm) torque.

3. Fill the crankcase with new oil of the proper type, up to the point of overflowing the filler neck. Refer to "Oil Type" on page 12. Always check the oil level before adding more oil.

4. Reinstall the oil fill/check plug and tighten securely.

MAINTENANCE

SERVICE PRECLEANER AND AIR CLEANER:

Check the Air Cleaner daily or before starting the engine. Check for and correct heavy buildup of dirt and debris, as well as loose or damaged components.

Service Precleaner:

Wash and re-oil the precleaner after every 25 hours of operation (more often under dusty or dirty conditions).

1. Loosen air cleaner cover retaining knob.

NOTE: Choke control must be in the "OFF" position.

2. Slide the air cleaner cover off of the air cleaner base (away from the starter hand) and remove the precleaner from the air cleaner element. See FIG. 9.

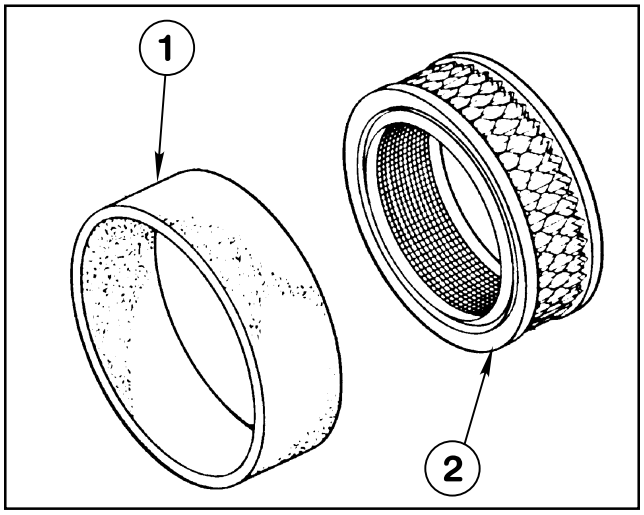

FIG. 9

1. Precleaner 2. Air Cleaner Element

3. Wash the precleaner in warm water with detergent. Rinse the precleaner thoroughly until all traces of detergent are eliminated. Squeeze out excess water (do not wring). Allow the precleaner to air dry.

4. Saturate the precleaner with new engine oil. Squeeze out all excess oil.

5. Reinstall the precleaner over the element. Reinstall the air cleaner cover and tighten the retaining knob.

Service Paper Element:

Every 100 hours of operation (more often under dusty or dirty conditions), check the paper element. Replace the paper element as necessary.

1. Remove the air cleaner cover and the precleaner from the air cleaner element as described above (steps 1 and 2).

2. Remove the air cleaner cover ring, element cover w/grommet, washer and wing nut. Pull the element cover w/grommet off. Remove the paper element.

3. Replace a dirty, bent or damaged element. Do not wash the paper element or use pressurized air as this will damage the element. Handle new elements carefully; do not use if the sealing surfaces are bent or damaged.

4. When servicing the air cleaner, check the air cleaner base. Make sure it is secured and not bent or damaged. Also check the air cleaner element cover for damage or improper fit. Replace all bent or damaged air cleaner components.

5. Install new or serviced paper elements and components as follows:

A. Position paper element on base.

B. Slide element cover w/grommet, then washer, onto stud. Secure with wing nut.

C. Reinstall the precleaner over the paper element.

D. Reinstall air cleaner cover ring into element cover.

E. Reinstall air cleaner cover and secure with retaining knob.

CLEAN AIR INTAKE/COOLING AREAS:

To insure proper cooling, make sure the screen, cooling fins and other external surfaces of the engine are kept clean at all times.

IMPORTANT: Operating the engine with a blocked screen, dirty or plugged cooling fins, and/or cooling shrouds removed, will cause engine damage due to overheating.

Every 100 hours of operation (more often under dusty, dirty conditions), remove the blower housing and other cooling shrouds. Clean the cooling fins and external surfaces as necessary. Make sure the cooling shrouds are reinstalled.

CHECK SPARK PLUG:

Every 100 hours of operation, clean the area around the base of the plug and check its condition. Reset the gap to 0.030in. (0.76mm) or replace with a new plug as necessary (see FIG. 10). Use a Champion type RC12YC or equivalent. Torque to 18-22 ft. lbs. (24.4 - 29.8 Nm).

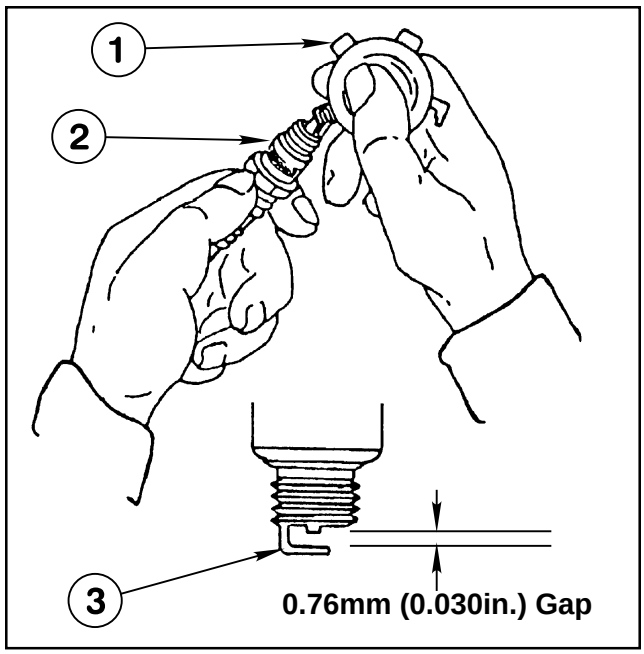

FIG. 10

1. Wire Gauge
2. Spark Plug
3. Ground Electrode

NOTES:



Helping you put quality into play.™



Helping you put quality into play.™

The Toro Promise
A Two Year Limited Warranty

The Toro Company promises to repair your Model 41021 Skid Sprayer if defective in materials or workmanship. The following time periods from the date of purchase apply special warranty terms, on certain components, may be offered through The Toro Company by the component manufacturers:

Commercial Products.....2 Years

The cost of parts, labor and transportation are included.

If you feel your TORO Product is defective and wish to rely on The Toro Promise, the following procedure is recommended:

1. Contact your Authorized TORO Distributor or Commercial Dealer (the Yellow Pages of your telephone directory is a good reference source).

2. The TORO Distributor or Commercial Dealer will advise you on the arrangements that can be made to inspect and repair your product.

3. The TORO Distributor or Commercial Dealer will inspect the product and advise you whether the product is defective and, if so, make all repairs necessary to correct the defect without an extra charge to you.

If for any reason you are dissatisfied with the distributor's analysis of the defect or the service performed, you may contact us.

Write:

TORO Commercial Products Service Department
8111 Lyndale Avenue South
Bloomington, MN 55420-1196

The above remedy of product defects through repair by an Authorized TORO Distributor or Commercial Dealer is the purchaser's sole remedy for any defect.

THERE IS NO OTHER EXPRESS WARRANTY. ALL IMPLIED WARRANTIES OF MERCHANTABILITY AND FITNESS FOR USE ARE LIMITED TO THE DURATION OF THE EXPRESS WARRANTY.

Some states do not allow limitations on how long an implied warranty lasts, so the above limitation may not apply to you.

This Warranty applies only to parts or components which are defective and does not cover repairs necessary due to normal wear, misuse, accidents, or lack of proper maintenance. Regular, routine maintenance of the unit to keep it in proper operating condition is the responsibility of the owner.

All warranty repairs reimbursable under The Toro Promise must be performed by an Authorized Toro Commercial Dealer or Distributor using Toro approved replacement parts.

Repairs or attempted repairs by anyone other than an Authorized TORO Distributor or Commercial Dealer are not reimbursable under The TORO Promise. In addition, these unauthorized repair attempts may result in additional malfunctions, the correction of which is not covered by warranty.

THE TORO COMPANY IS NOT LIABLE FOR INDIRECT, INCIDENTAL OR CONSEQUENTIAL DAMAGES IN CONNECTION WITH THE USE OF THE PRODUCT INCLUDING ANY COST OR EXPENSE OF PROVIDING SUBSTITUTE EQUIPMENT OR SERVICE DURING PERIODS OF MALFUNCTION OR NON-USE.

Some states do not allow the exclusion of incidental or consequential damages, so the above exclusion may not apply to you.

This warranty gives you specific legal rights, and you may also have other rights which vary from state to state.

COUNTRIES OTHER THAN THE UNITED STATES OR CANADA

Customers who have purchased TORO products exported from the United States or Canada should contact their TORO Distributor (Dealer) to obtain guarantee policies for your country, province, or state. If for any reason you are dissatisfied with your Distributor's service or have difficulty obtaining guarantee information, contact the TORO importer. If all other remedies fail, you may contact us at The Toro Company.

Compliance with Radio Interference Regulations Certified.