Form No. 3401-659 Rev C

TORO®

Count on it.

Parts Catalog

Multi Pro® WM Turf Sprayer

Model No. 41240—Serial No. 316000001 and Up

Register at www.Toro.com.
Original Instructions (EN)

CE

3401-659 C

Ordering Replacement Parts

To order replacement parts, please supply the part number, the quantity, and the description of each part desired.

Understanding Reference Numbers

Each identified part in an illustration has a reference number. The reference number for a part also appears in the parts list, along with other information about the part.

This catalog uses two special reference number formats, one to indicate parts in a service assembly and another to indicate the quantity of a given part in an illustration.

Service Assembly Reference Numbers

Parts in service assemblies have reference numbers in the form a:b. The a represents the reference number of the entire service assembly and the b represents a sequential number unique to each part within the service assembly.

For example, a wheel assembly might be identified by reference number 6, the tire by 6:1, the valve by 6:2, and the wheel by 6:3. When you order the assembly identified by reference number 6, you receive all parts identified by reference numbers 6:1,6:2, and 6:3. However, you may also order any part individually. Reference numbers of this type appear in illustration and in parts lists.

Reference Numbers Indicating Quantity

In an illustration, if a reference number indicates more than one part, the reference number has the form nX y. The n represents the quantity of the part, the X is the multiplication symbol, and the y represents the reference number.

For example, in an illustration, the reference number 2X 37 means that two of the parts identified by reference number 37 are indicated.

Contents

Frame, Stand and Boom Mount Assembly . . . 4
Control Console Assembly . . . 6
Turf Sprayer Finishing Kit No. 131-3301 . . . 7
Hydraulic Motor Assembly No. 131-5810 . . . 8
Multi Pro WM Turf Sprayer Finishing Kit No. 131-3302 . . . 9
Driveshaft Assembly No. 125-0680 . . . 10
Pump Mount Assembly . . . 11
Pump Assembly No. 117-0713 . . . 12
Spray Tank Assembly . . . 13
Tank Assembly No. 121-6518 . . . 14
Spray Tank Lid Assembly No. 119-9380 . . . 15
Filter Assembly No. 130-7096 . . . 16
Spray Valve Assembly . . . 17
Agitation Valve Assembly . . . 18
Regulating Valve Body Assembly No. 127-9804 . . . 19
Actuator Regulating Valve No. 131-3724 . . . 20
Manifold Valve Kit No. 131-0253 . . . 21
Manifold Valve Kit No. 131-7256 . . . 22
Flow Meter Assembly No. 106-1038 . . . 23
Section Valve Manifold Assembly . . . 24
On/Off Manifold Valve Kit No. 127-9803 . . . 25
Actuator On/Off Kit No. 131-3723 . . . 26
Bypass Valve Assembly No. 127-9805 . . . 27
On/Off 2-Way Valve Kit No. 131-0249 . . . 28
Hose Assembly . . . 29
Boom Lift Assembly . . . 31
Hydraulic Cylinder Assembly No. 117-0701 . . . 32
On-Off Boom Lift Valve No. 117-0702 . . . 33
Electrical Assembly . . . 34
Center Boom Assembly . . . 35
LH Single Turret Body Assembly No. 108-3725 . . . 37
Double Turret Body Assembly No. 108-3727 . . . 38
RH Single Body Turret Assembly No. 108-3726 . . . 39
Boom Mounting Assembly . . . 40
Left and Right Hand Boom Assembly . . . 41
Attachments and Accessories . . . 42

© 2024—The Toro® Company
8111 Lyndale Avenue South
Bloomington, MN 55420

Contact us at www.Toro.com.
Printed in the USA.
All Rights Reserved

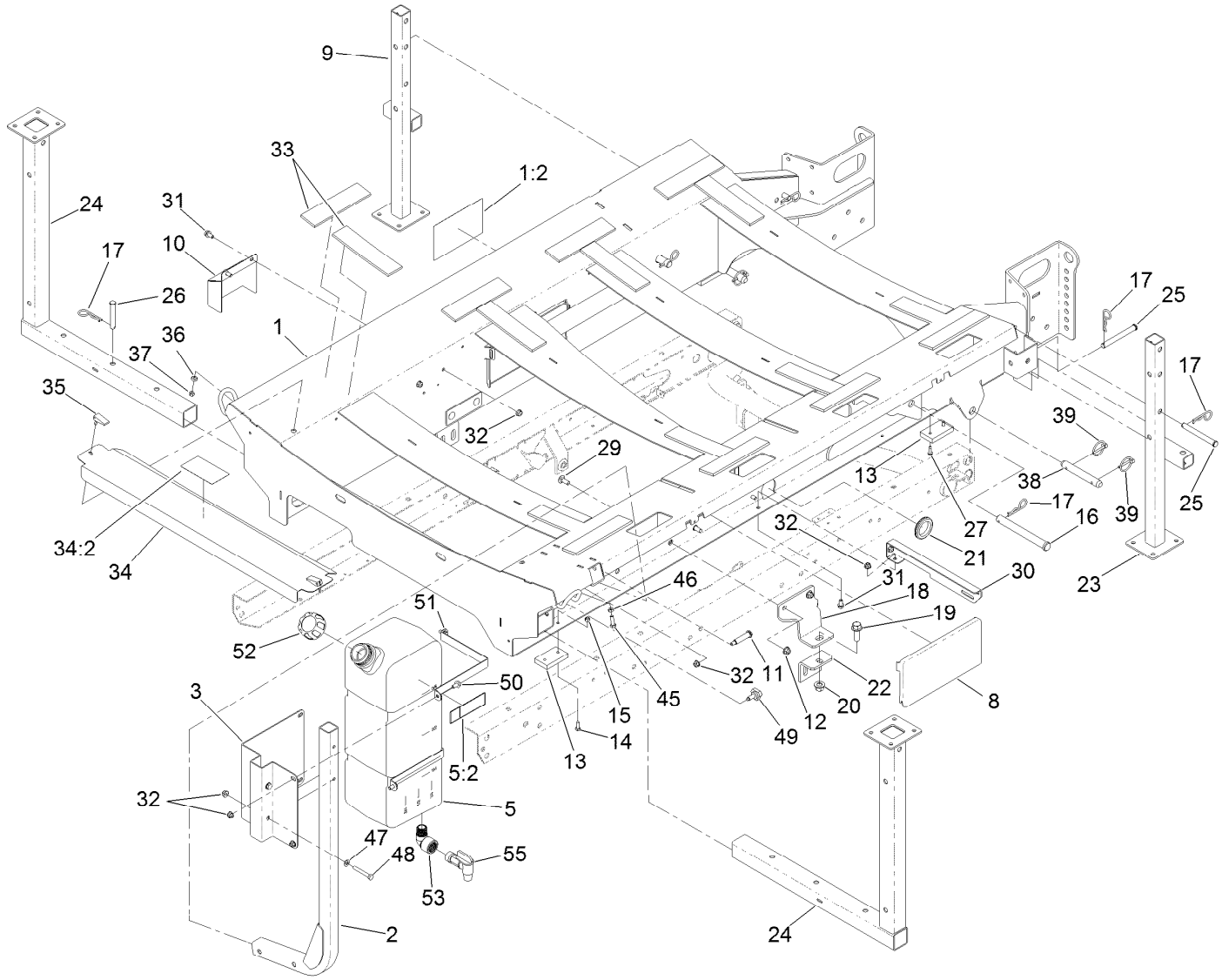

Frame, Stand and Boom Mount Assembly

Ref.	Part Number	Qty.	Description
1	127-3984	1	Skid ASM
1:2	127-3936	2	Decal-Danger
2	131-5791-03	1	Tube
3	131-5796-03	1	Mount-Tank, Eye Wash
5	132-7745	1	Fresh Water Tank ASM
5:2	120-0616	3	Decal-Water, Fresh
8	125-0798	2	Cover-Access
9	125-8108-03	1	Jack Stand-Rear, RH
10	125-8138-03	1	Guard-Relay
11	100-9880	2	Bolt-Shoulder
12	104-8301	4	Nut-HF, NI
13	93-9719	4	Block-Wear
14	321-4	4	Screw-HH
15	3296-42	4	Nut-Lock, NI
16	100-5569	2	Pin-Clevis
17	3290-343	8	Pin-Hair
18	125-0809	2	Bracket-Mount, Front
19	100-6116	2	Screw-HHF
20	99-5107	2	Nut-Lock
21	240-2	1	Grommet-Rubber
22	92-2667-03	2	Bracket-Mount

Ref.	Part Number	Qty.	Description
23	125-0840-03	1	Jack Stand-Rear
24	125-0841-03	2	Stand-Front
25	283-83	4	Pin-Clevis
26	283-55	2	Pin-Clevis
27	49-2040	4	Screw-HWHTF
29	3231-2	4	Bolt-CARR
30	125-4049-03	1	Bracket-Mount, Valve Drain
31	3234-14	4	Screw-HHF
32	104-8300	12	Nut-HF, NI
33	125-8094	16	Pad-Tank
34	127-3985	1	Skid Cover ASM
34:2	127-3937	1	Decal-Warning, Engine Cover
35	106-6777	2	Handle-Latch, Swell
36	106-6778	2	Bushing-Latch, Swell
37	1-804254	2	Nut-Lock, HH
38	92-1233	2	Pin-Clevis
39	92-1298	4	Pin-Lynch
45	322-5	1	Screw-HH
46	3218-2	1	Nut-Hex Jam
47	3256-23	2	Washer-Plain

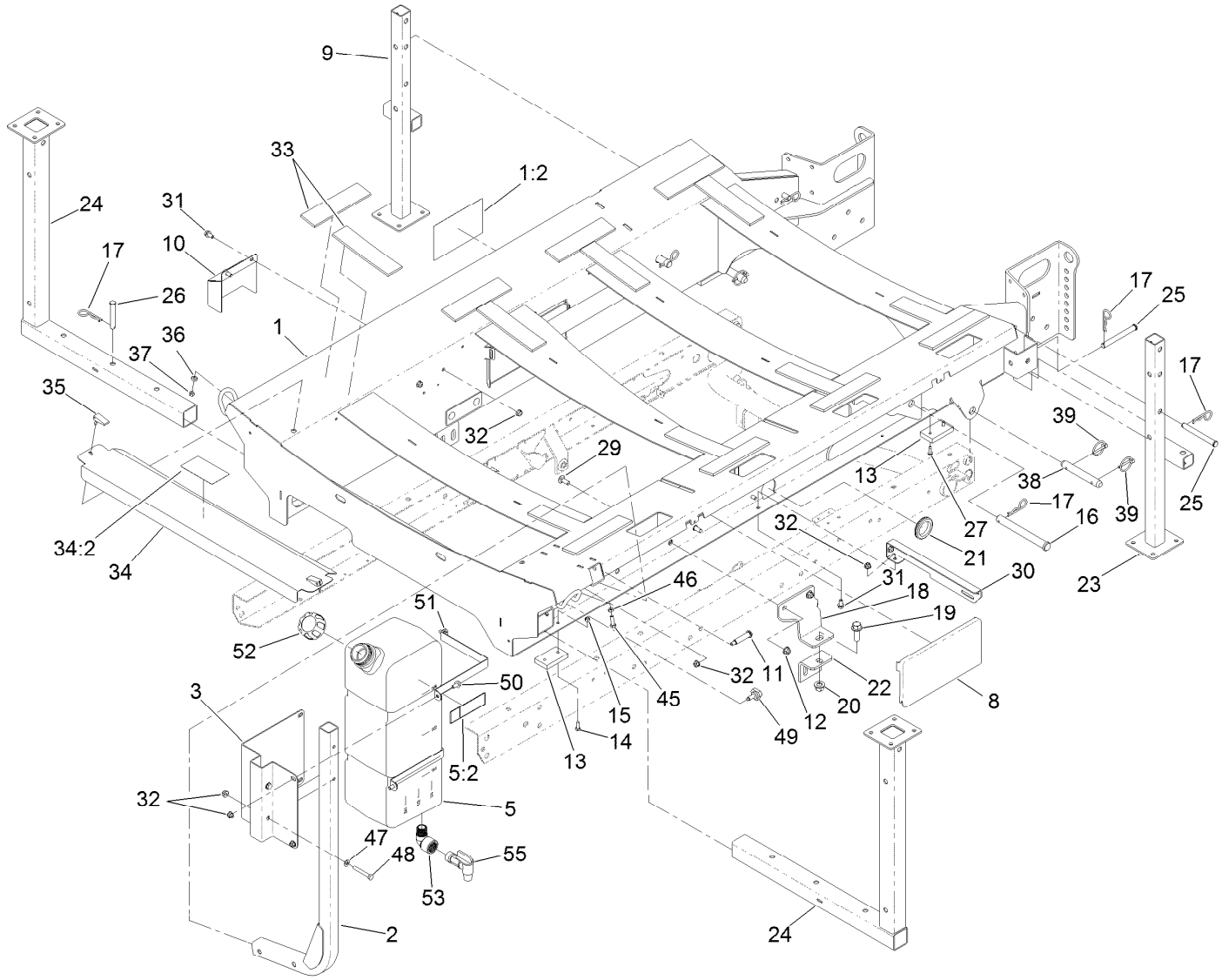

Frame, Stand and Boom Mount Assembly (continued)

Ref.	Part Number	Qty.	Description
48	322-11	2	Screw-HH
49	95-9648	2	Knob
50	3234-7	4	Screw-HHF
51	132-7628-03	2	Band-Tank, Eye Wash
52	106-5052	1	Cap-Water, Fresh
53	132-7706	1	Elbow-90 DEG
55	100-7011	1	Spigot-90 DEG

ITEM 4 Used with
MANUAL WORKMAN FINISH KIT, 131-3302

ITEM 35 Used with
AUTOMATIC WORKMAN FINISH KIT, 131-3301

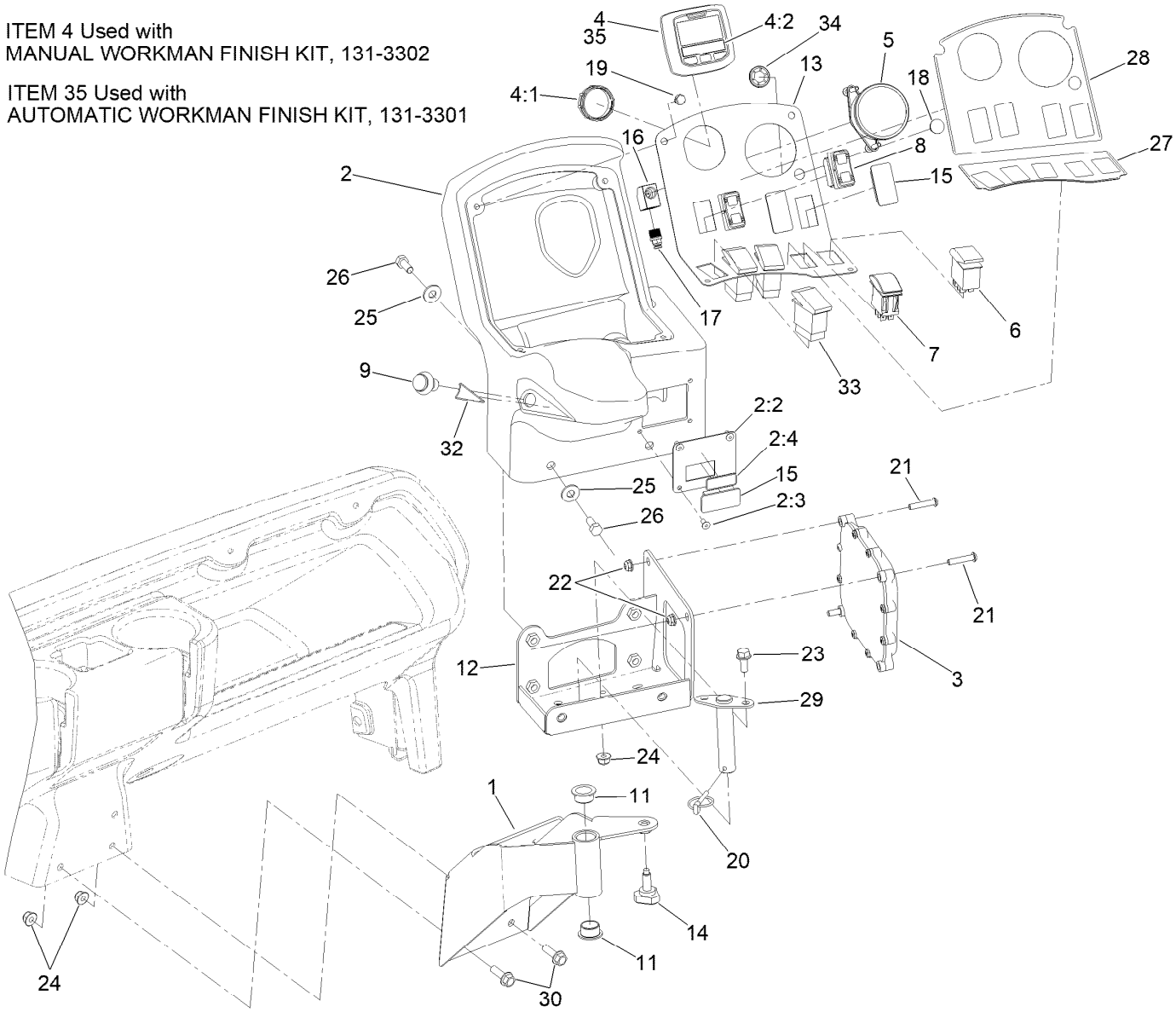

Control Console Assembly

Ref.	Part Number	Qty.	Description
1	131-5795-03	1	Bracket-Console
2	131-9618	1	Control-Console
2:2	131-9607-03	1	Plate-Switch
2:3	3290-409	4	Rivet
2:4	131-5808	1	Decal-Switch
3	115-1900	1	Controller
4	120-6310	1	LCD Display ASM Kantrak 1700
4:1	120-4630	1	Nut-Display
4:2	120-6311	1	Decal-Display
5	120-8546	1	Gauge-Pressure
6	100-8490	1	Switch-Rocker, On-None-On
7	100-1535	1	Switch-Rocker, (On)-Off-(On)
8	125-0899	2	Switch-Rocker
9	125-7996	1	Switch-Pb, Momentary
11	109-8054	2	Bushing-Flange
12	125-4021-03	1	Bracket-Pivot, Console
13	125-4020-03	1	Panel-Control
14	95-9648	1	Knob

Ref.	Part Number	Qty.	Description
15	99-7420	3	Plug-Hole
16	131-9605	1	Fitting-Elbow-90
17	100-8674	1	Coupler-Tube
18	119-5329	1	Plug-Hole
19	93-6083	4	Screw-HWH
20	3290-495	1	Pin-Klik
21	120-0834	3	Screw-HSBH
22	104-7201	3	Nut-HF, NI
23	3234-5	2	Screw-HHF
24	104-8300	5	Nut-HF, NI
25	3256-71	6	Washer-Flat
26	322-43	6	Screw-HH
27	130-8294	1	Decal-Console
28	125-4052	1	Decal-Console, Upper
29	125-4054	1	Pin
30	3234-17	3	Screw-HHF
32	125-8139	1	Decal-Master Boom Switch
33	95-8999	3	Switch-Rocker, On-None-On
34	1-323142	1	Nut-Push
35	163-2995	1	Display-LCD, Svc Only

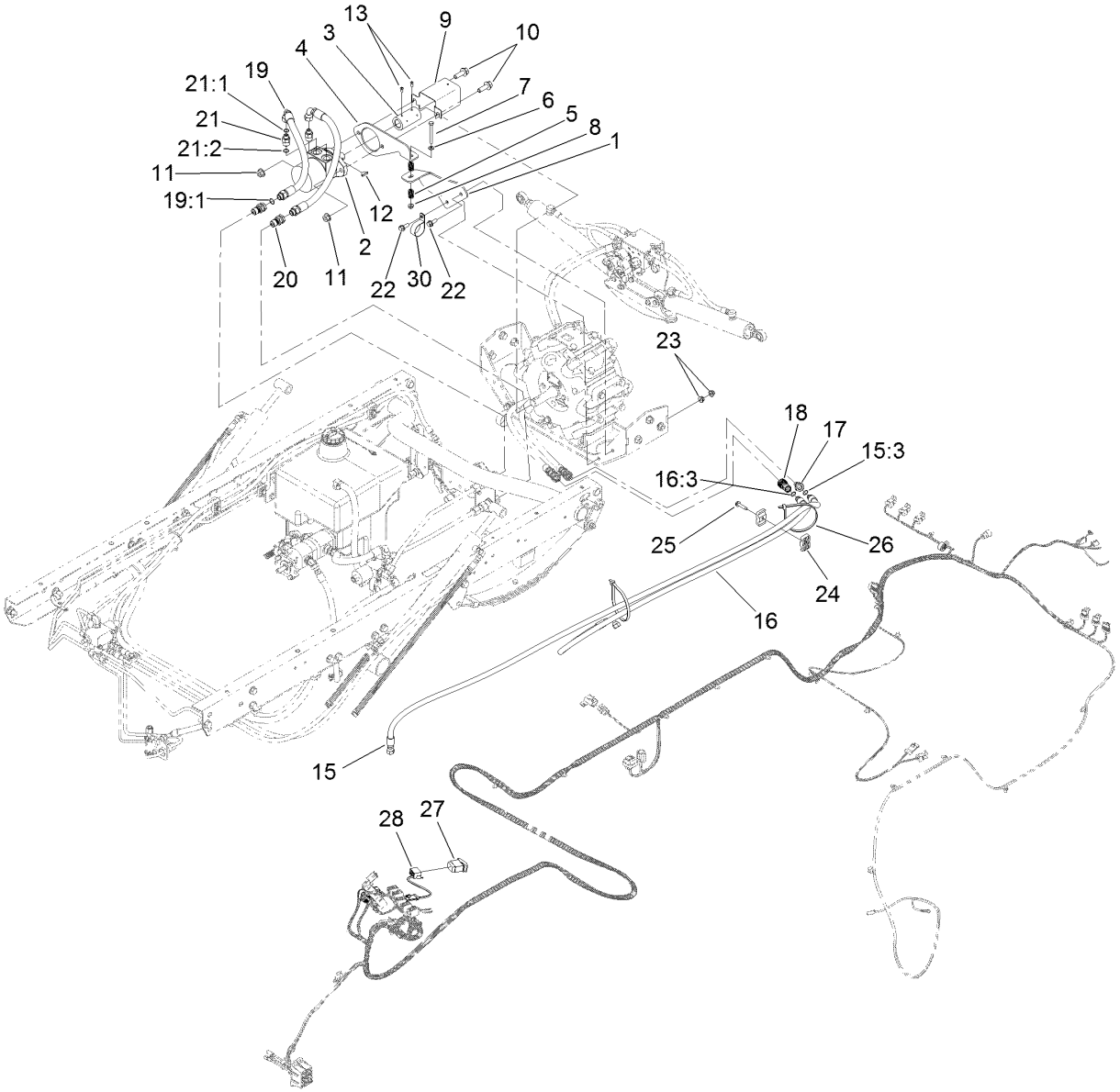

Turf Sprayer Finishing Kit No. 131-3301

Ref.	Part Number	Qty.	Description
1	127-9796-03	1	Mount-Arm, Torque
2	131-5810	1	Motor-Hydraulic
3	117-8045	1	Coupler
4	127-9794-03	1	Bracket-Motor
5	110-5331	2	Spring-Compression
6	3256-23	1	Washer-Plain
7	322-14	1	Screw-HH
8	104-8300	1	Nut-HF, NI
9	120-0628-03	1	Guard-Shaft, Pump
10	100-6116	2	Screw-HHF
11	108-3745	2	Nut-HHF, Whiz
12	106-1990	1	Key-Woodruff
13	3241-7	4	Screw-SQH
15	112-0273	1	HYD Hose ASM
15:3	237-42	1	O-Ring
16	130-7181	1	Upper Lift Hose Valve ASM
16:3	237-42	1	O-Ring

Ref.	Part Number	Qty.	Description
17	106-7969	1	Coupler-Quick, Male
18	106-7968	1	Coupler-Quick, Female
19	130-7184	2	HYD Hose ASM
19:1	237-79	1	O-Ring
20	105-4170	2	Coupler-Male
21	340-6	2	Fitting-Straight
21:1	237-30	1	O-Ring
21:2	237-80	1	O-Ring
22	3234-42	2	Screw-HHF
23	104-8301	2	Nut-HF, NI
24	56-7976	2	Clamp-Tube
25	32144-57	1	Screw
26	3334-945	2	Tie-Cable
27	95-8999	1	Switch-Rocker, On-None-On
28	122-0372	1	Harness-Wire
30	2412-147	1	Clamp-R

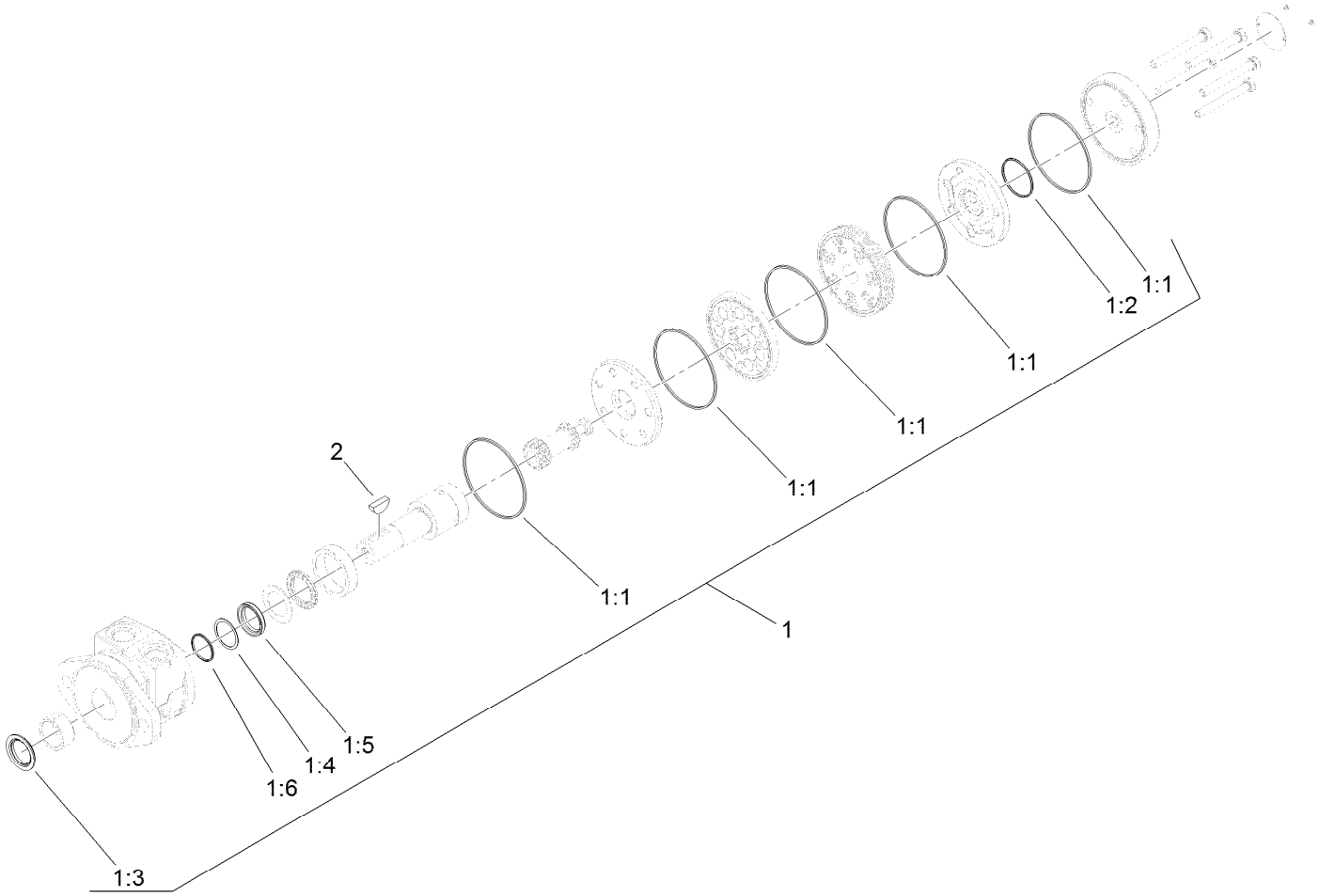

Hydraulic Motor Assembly No. 131-5810

Ref.	*Part Number*	*Qty.*	*Description*
1	106-1989	1	Seal Kit
1:1		6	Seal-Ring ■
1:2		1	Seal-Commutator ■
1:3		1	Seal-Dirt And Water ■
1:4		1	Washer-Backup ■
1:5		1	Seal-Shaft ■
1:6		1	Ring-Back Up ● ■
2	106-1990	1	Key-Woodruff

● Not illustrated

■ Not serviced separately

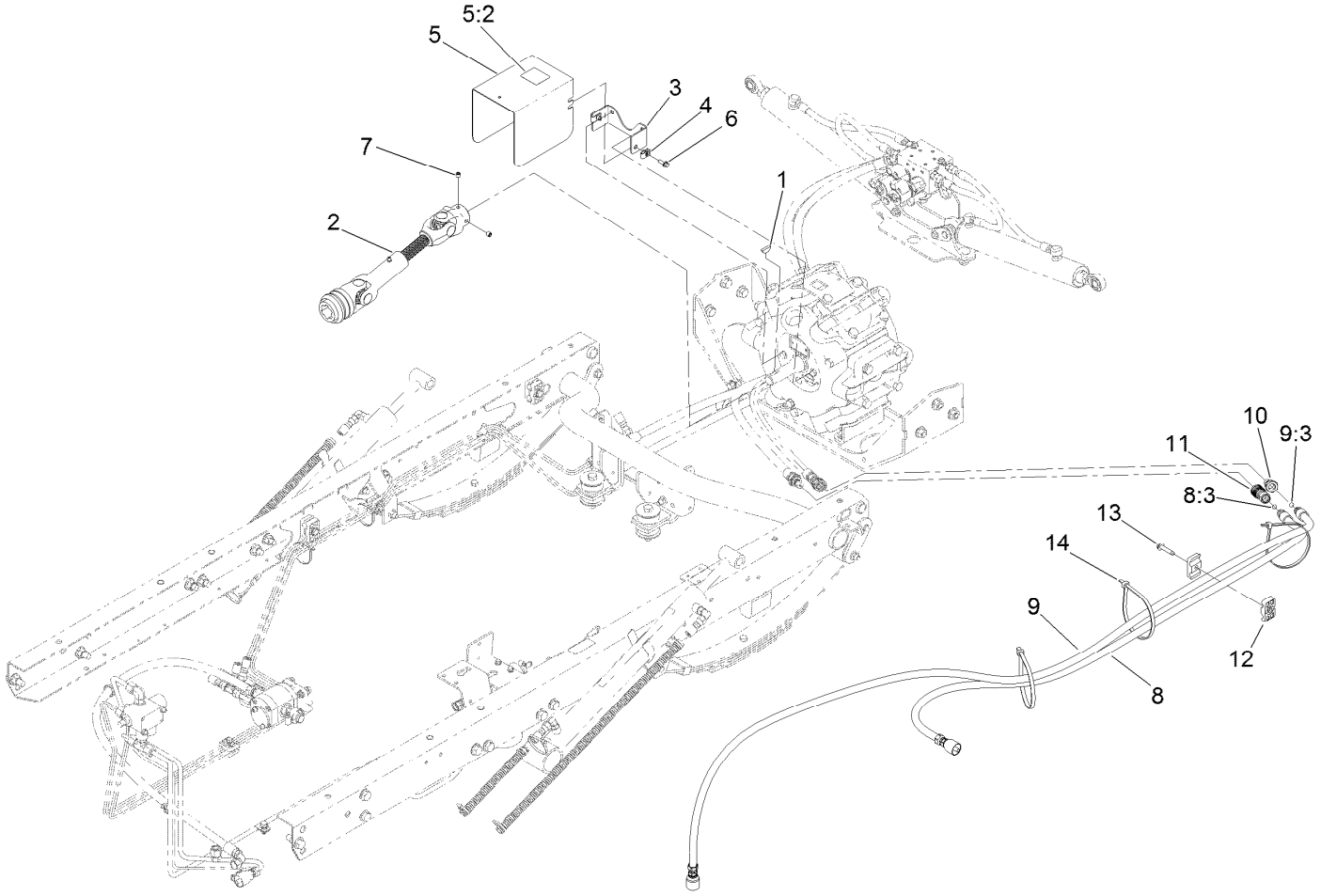

Multi Pro WM Turf Sprayer Finishing Kit No. 131-3302

Ref.	Part Number	Qty.	Description
1	106-1990	1	Key-Woodruff
2	125-0680	1	Driveshaft-PTO
3	125-8054-03	1	Bracket-Shield, Driveshaft
4	107069	2	Clip
5	127-3986	1	Shield-Driveshaft
5:2	127-3981	1	Decal-Warning
6	3234-4	2	Screw-HHF
7	3247-2	2	Screw-Set, HSH
8	112-0274	1	Hose-HYD

Ref.	Part Number	Qty.	Description
8:3	237-42	1	O-Ring
9	112-0273	1	HYD Hose ASM
9:3	237-42	1	O-Ring
10	106-7969	1	Coupler-Quick, Male
11	106-7968	1	Coupler-Quick, Female
12	56-7976	2	Clamp-Tube
13	32144-57	1	Screw
14	3334-945	3	Tie-Cable

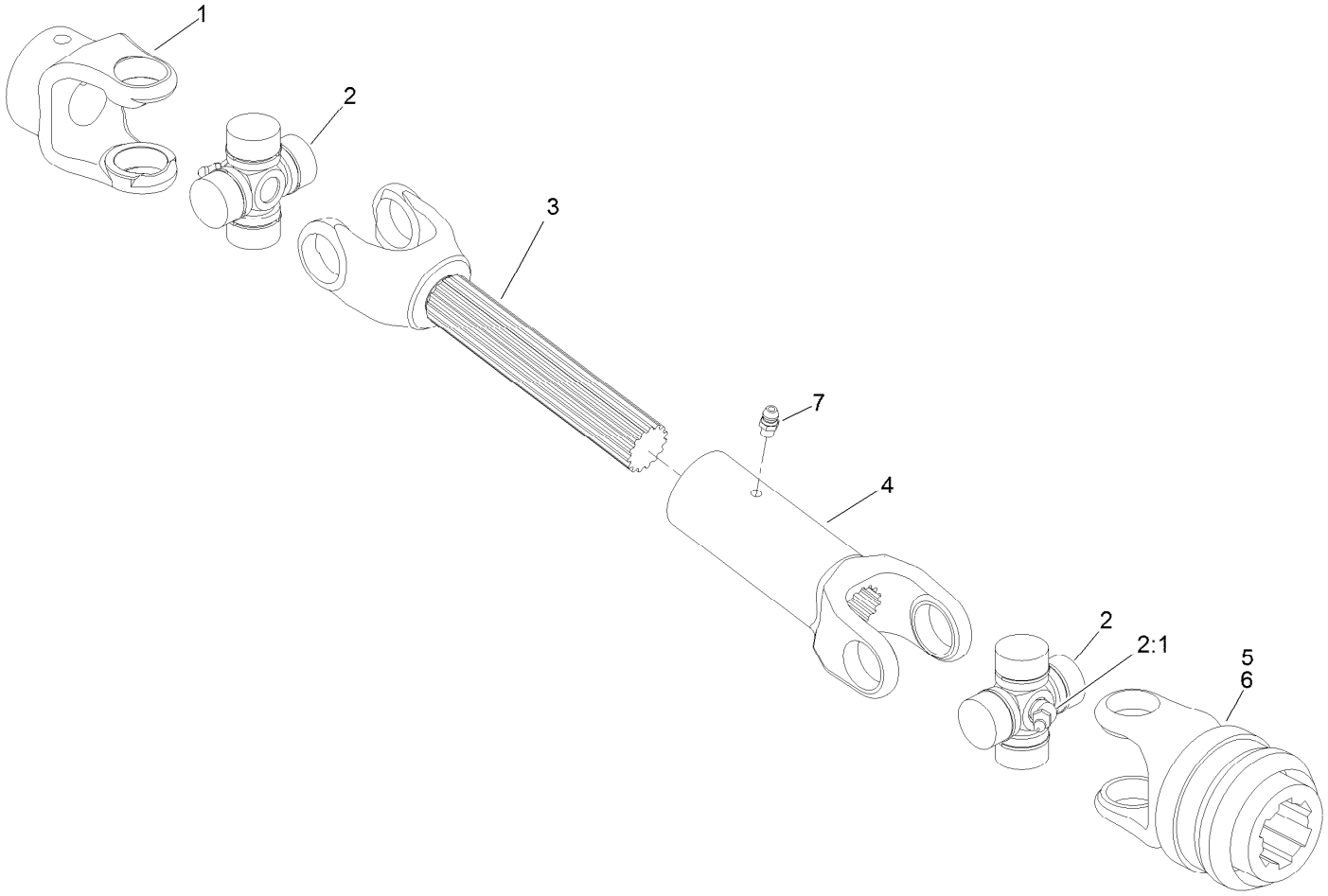

Driveshaft Assembly No. 125-0680

Ref.	*Part Number*	*Qty.*	*Description*
1	125-0679	1	Yoke-Shaft
2	54-9180	2	U-Joint Kit
2:1	62-3820	1	Fitting-Grease
3	125-8109	1	Shaft-Slip Yoke
4	94-7379	1	Tube-Yoke, Slip
5	99-4476	1	Spring Lock Yoke ASM
6	99-4477	1	Yoke Spring Lock Repair Kit
7	302-5	1	Fitting-Grease

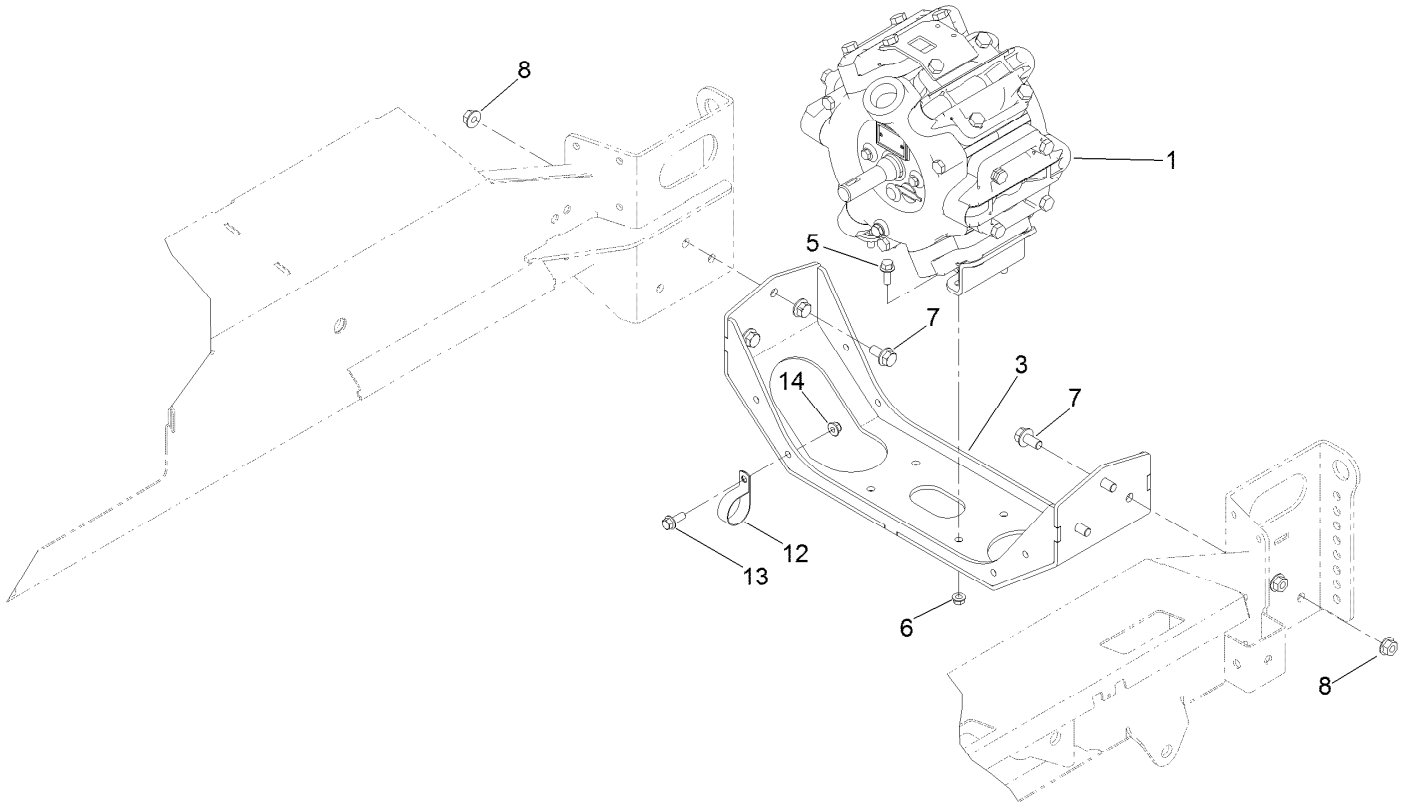

Pump Mount Assembly

Ref.	*Part Number*	*Qty.*	*Description*
1	117-0713	1	Pump ASM
3	125-8053-03	1	Mount-Pump
5	3234-11	4	Screw-HHF
6	3290-357	4	Nut-HSF
7	3234-6	6	Screw-HHF
8	32128-49	6	Nut-HHF
12	2412-147	1	Clamp-R
13	3234-42	1	Screw-HHF
14	104-8301	1	Nut-HF, NI

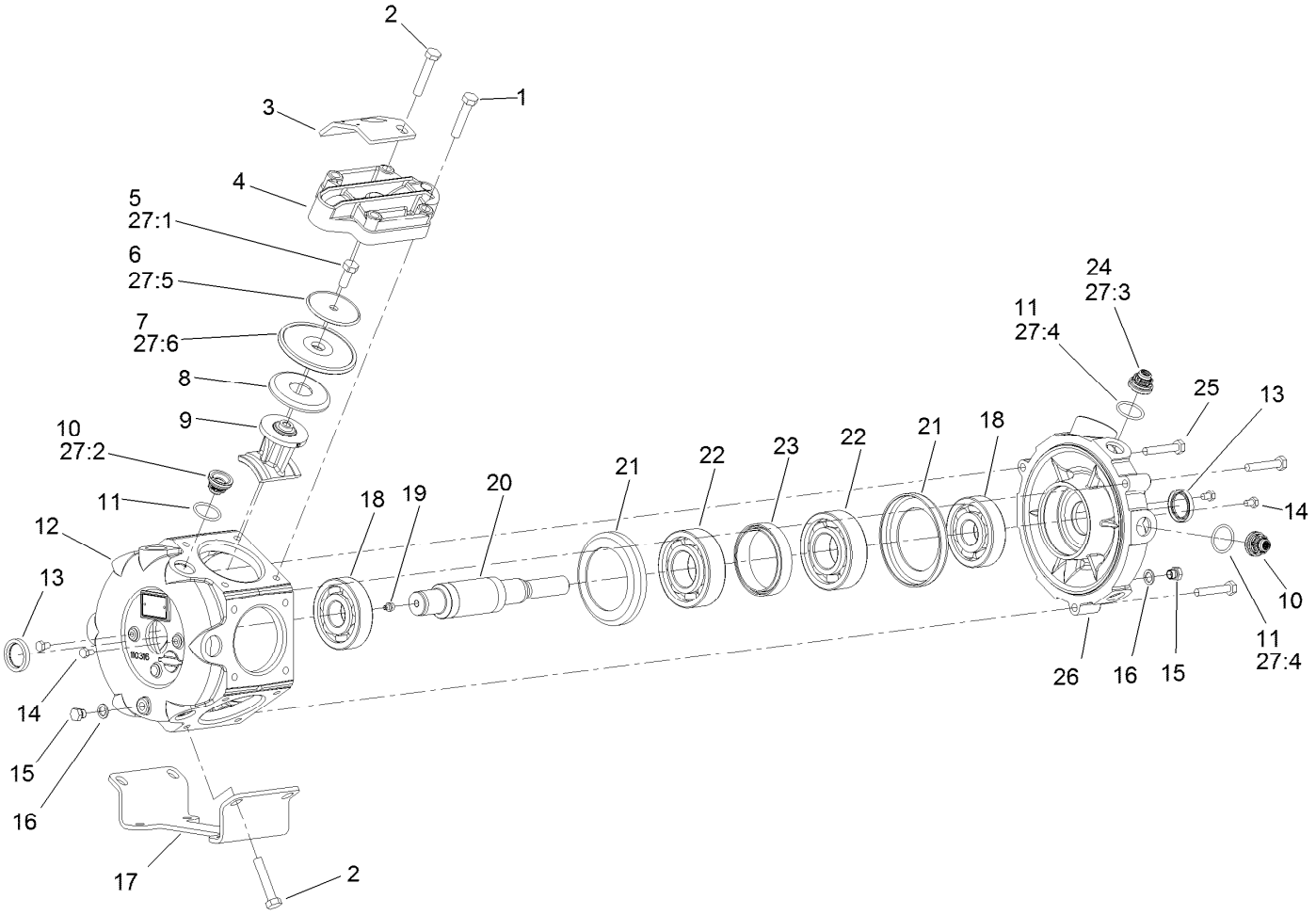

Pump Assembly No. 117-0713

Ref.	Part Number	Qty.	Description
1	120-0773	18	Bolt-Hex
2	120-0774	6	Bolt-Hex
3	120-0775	1	Bracket-Pump
4	120-0776	6	Cover-Valve
5	120-0777	6	Bolt-Hex
6	120-0778	6	Disc-Diaphragm
7	120-0779	6	Diaphragm
8	120-0780	6	Disc-Backing, Diaphragm
9	120-0781	6	Rod-Connecting
10	99-0861	10	Valve-Pump
11	100-6651	12	O-Ring
12	120-0782	1	Casting-Pump
13	120-0783	2	Seal-Oil
14	120-0784	4	Bolt-Hex
15	120-0785	2	Plug
16	120-0786	2	Seal
17	120-0787	1	Foot-Pump
18	120-0788	2	Bearing-Ball
19	99-0873	1	Fitting-Grease
20	120-0789	1	Shaft-Crank
21	120-0790	2	Spacer-Metal
22	120-0791	2	Bearing-Ball
23	120-0792	1	Spacer
24	120-0793	2	Valve W/Hole
25	120-0794	3	Bolt-Hex
26	120-0795	1	Casting-Pump
27	120-0796	1	Pump Kit ●
27:1	120-0777	6	Bolt-Hex
27:2	99-0861	10	Valve-Pump
27:3	120-0793	2	Valve W/Hole
27:4	100-6651	12	O-Ring
27:5	120-0778	6	Disc-Diaphragm
27:6	120-0779	6	Diaphragm

● Not illustrated

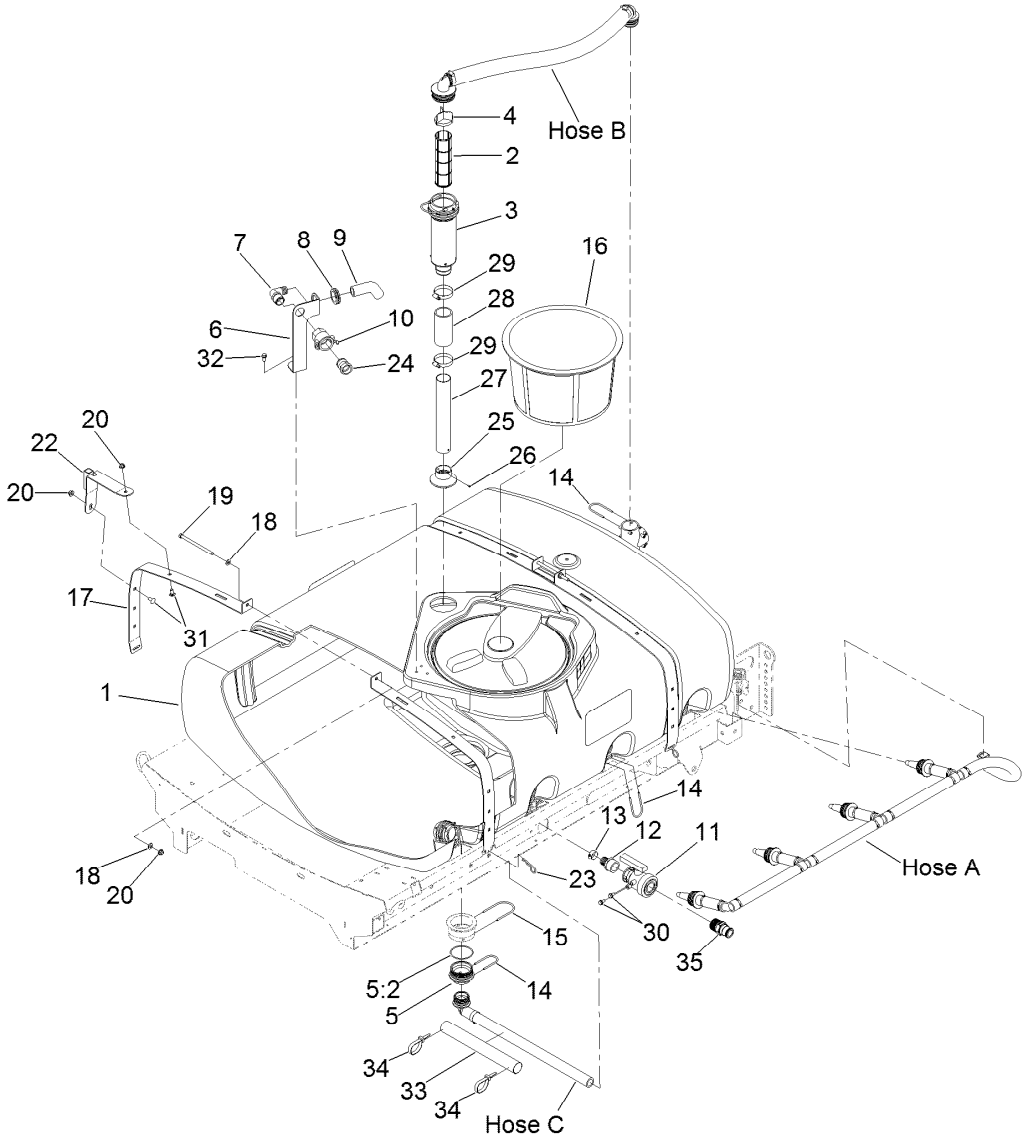

Reference **Hose Assembly** page for hose assemblies and service parts

Spray Tank Assembly

Ref.	Part Number	Qty.	Description
1	121-6518	1	200 Gallon Tank ASM
2	100-8642	1	Screen-Suction
3	130-7096	1	Filter ASM
4	100-8641	1	Vane-Screen
5	117-7928	1	Adapter ASM
5:2	100-6989	1	O-Ring
6	110-5082-03	1	Bracket-Anti Siphon
7	41140	1	Elbow
8	110-5090	1	Grommet
9	110-5088	1	Hose-Fill
10	100-6779	1	Coupling-Female
11	108-0069	1	Valve-Ball
12	110-5224	1	Fitting-Barbed, Straight
13	2412-34	2	Clamp-Hose
14	100-8635	6	Fork
15	117-7996	1	Fork
16	119-9419	1	Basket-Filter
17	125-4081-03	4	Band-Tank

Ref.	Part Number	Qty.	Description
18	3256-24	4	Washer-Plain
19	323-58	2	Bolt-TAP, HH
20	104-8301	4	Nut-HF, NI
22	127-3920-03	1	Bracket-Storage
23	3290-343	4	Pin-Hair
24	41316	1	Adapter-Quick
25	100-6714	1	Foot-Tube, Suction
26	108-3270	1	Screw-TAP
27	125-8128	1	Tube-Suction
28	100-8649	1	Hose-Suction
29	2412-130	2	Clamp-Hose
30	3234-7	2	Screw-HHF
31	3231-21	2	Screw-CARR
32	3234-5	1	Screw-HHF
33	127-9716	1	Shield-Hose, Drain
34	127-9795	2	Tie-Cable, High Temp
35	132-7787	1	Coupler-Quick

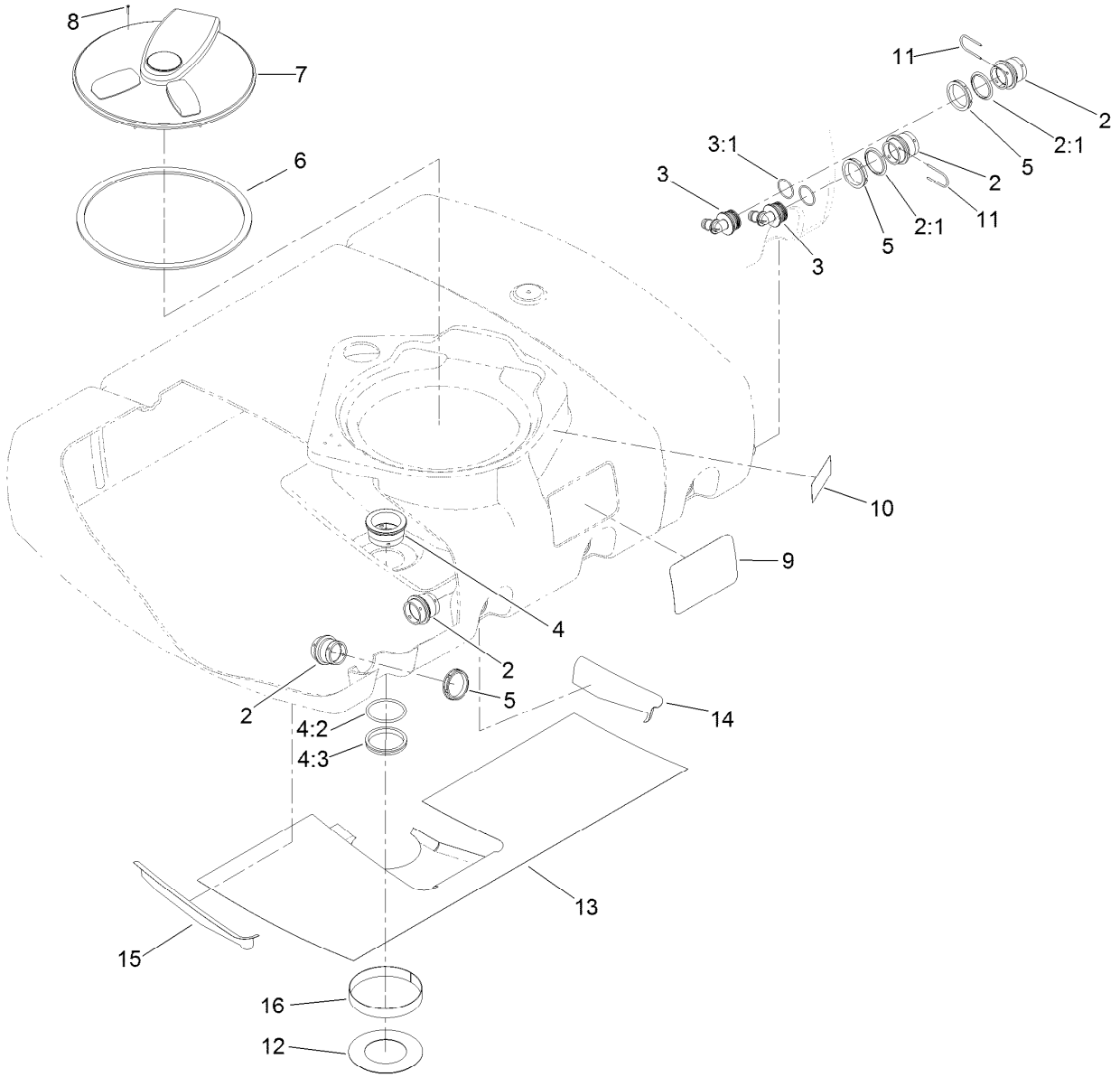

Tank Assembly No. 121-6518

Ref.	Part Number	Qty.	Description
2	108-3358	6	Fitting-Bulkhead
2:1	107-2864	1	Gasket-Bulkhead
3	106-4933	2	Hosebarb ASM
3:1	100-8637	1	O-Ring
4	117-7851	1	Bulkhead ASM
4:2	100-8646	1	Gasket-Bulkhead
4:3	100-8647	1	Nut-Bulkhead
5	100-7051	6	Nut-Bulkhead
6	119-9378	1	Gasket-Lid, Tank
7	119-9380	1	Spray Tank Lid ASM

Ref.	Part Number	Qty.	Description
8	107-8635	8	Screw-PFH
9	125-8064	2	Decal-Tank
10	120-0622	1	Decal-Warning
11	100-8635	2	Fork
12	127-3967	1	Shield-Sump, Bottom
13	127-3960	1	Shield-Sump, Center
14	127-3962	1	Shield-Sump, Rear
15	127-3961	1	Shield-Sump, Front
16	127-3988	1	Shield-Sump, Side

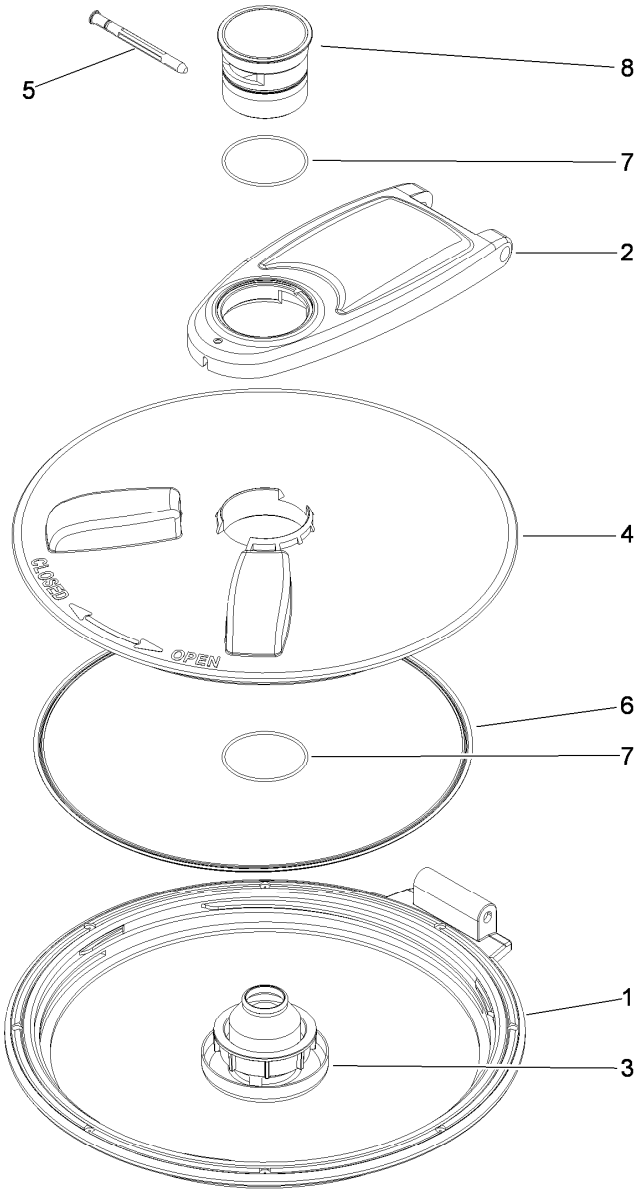

Spray Tank Lid Assembly No. 119-9380

Ref.	*Part Number*	*Qty.*	*Description*
1	119-9381	1	Ring-Lid
2	119-9382	1	Arm-Lid
3	119-9383	1	Vent-Lid
4	119-9384	1	Cover-Lid
5	119-9385	1	Pin-Pivot
6	106-5004	1	Seal-Lid
7	119-9386	2	O-Ring
8	119-9387	1	Cap-Lid

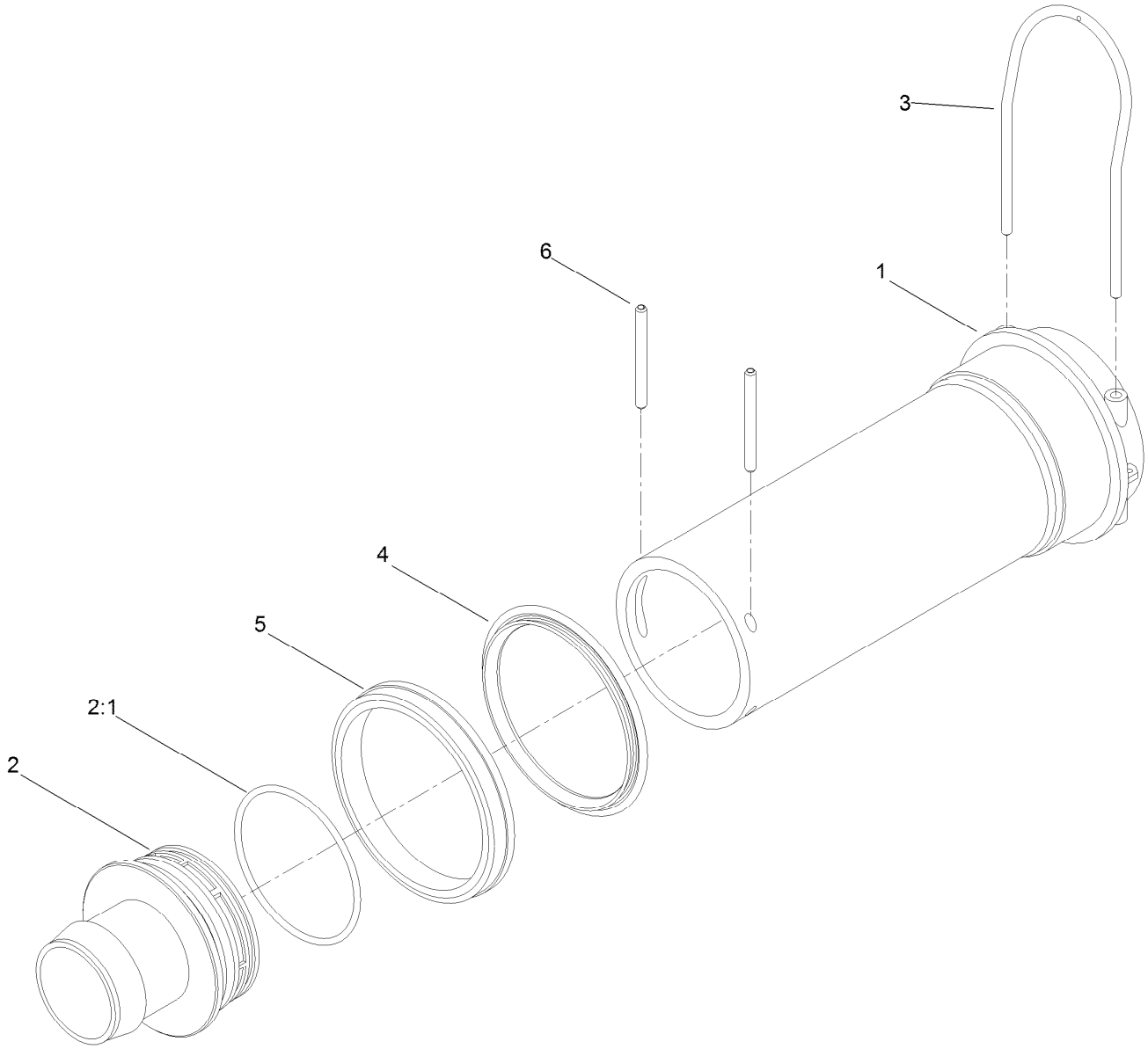

Filter Assembly No. 130-7096

Ref.	*Part Number*	*Qty.*	*Description*
1	100-8643	1	Housing-Filter
2	106-4942	1	Hosebarb-Straight
2:1	100-6989	1	O-Ring
3	100-8636	1	Fork-Special
4	100-8646	1	Gasket-Bulkhead
5	100-8647	1	Nut-Bulkhead
6	100-8644	2	Pin-Expansion

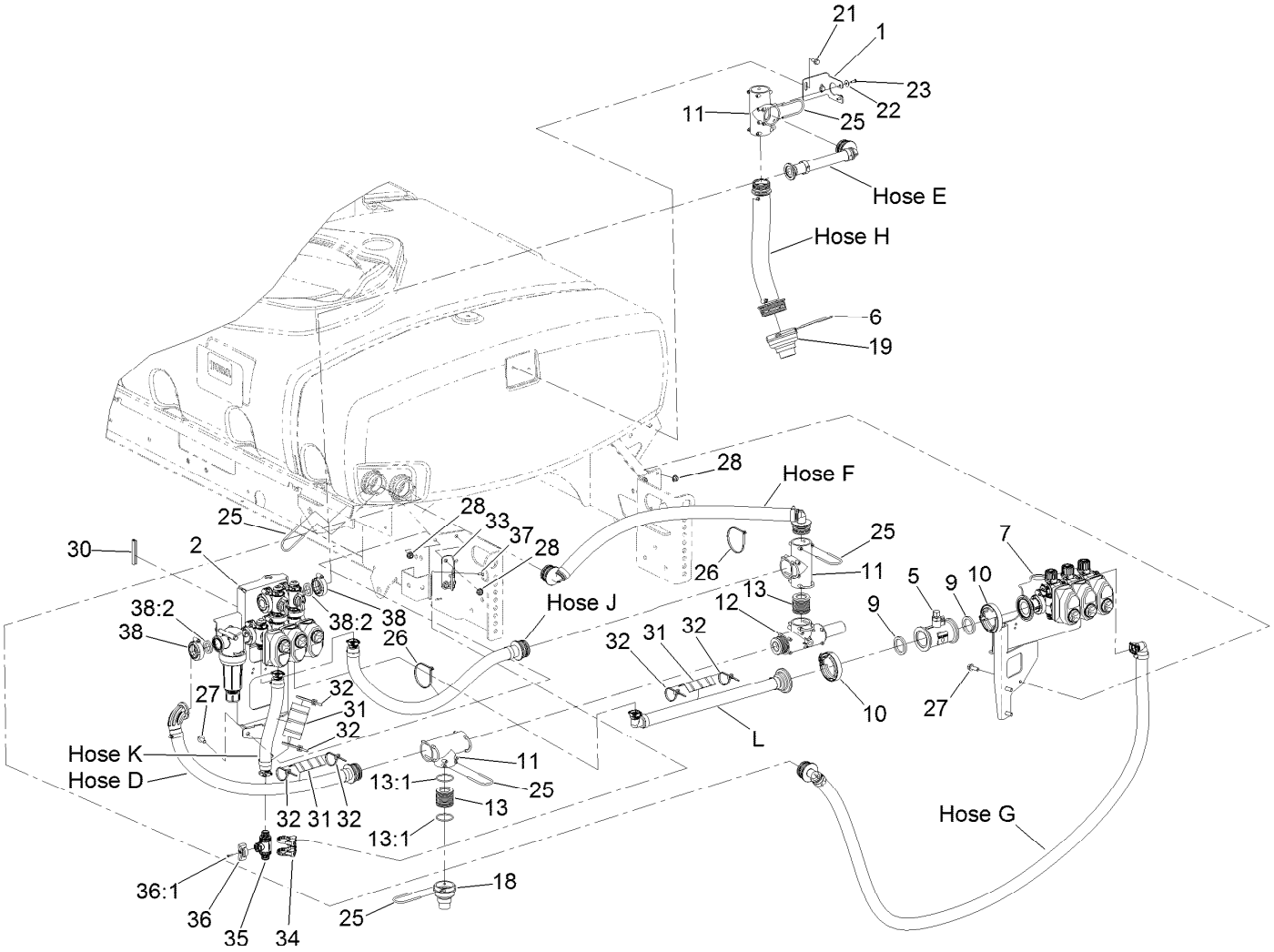

Reference **Hose Assembly** page for hose assemblies and service parts

Spray Valve Assembly

Ref.	Part Number	Qty.	Description
1	131-3704	1	Bracket-Fitting, Tee
2		1	Agitation Manifold ASM ●
5	106-1038	1	Flow Meter ASM
6	117-7996	1	Fork
7		1	Section Valve Manifold ASM ●
9	104-9090	2	Gasket
10	104-9089	2	Clamp-Screw, Worm
11	100-6704	3	Tee
12	117-7874	1	Relief Valve ASM
13	106-4947	2	Connector
13:1	100-8637	2	O-Ring
18	117-7859	1	Fitting-Pump
19	117-7858	1	Fitting-Pump
21	3234-47	2	Screw-HHF
22	3256-61	2	Washer-Flat
23	32144-32	2	Screw-PPH

Ref.	Part Number	Qty.	Description
25	100-8635	12	Fork
26	3290-379	2	Tie-Cable
27	3234-42	6	Screw-HHF
28	104-8301	6	Nut-HF, NI
30	131-9636	1	Trim-Manifold, Agitation
31	AU112950	3	Protector-Hose
32	3290-378	6	Tie-Cable
33	132-4325-03	1	Mount-Bracket, Agitation
34	132-4302	1	Mount-Valve
35	131-0249	1	On/Off 2-Way Valve Kit
36	131-0264	1	Agitation Throttling Handle Kit
36:1	131-0263	1	Screw-Handle
37	33113-012	4	Screw-HH
38	127-9829	2	Clamp/Gasket Kit
38:2	127-1145	1	Gasket-Flange

● Not serviced separately

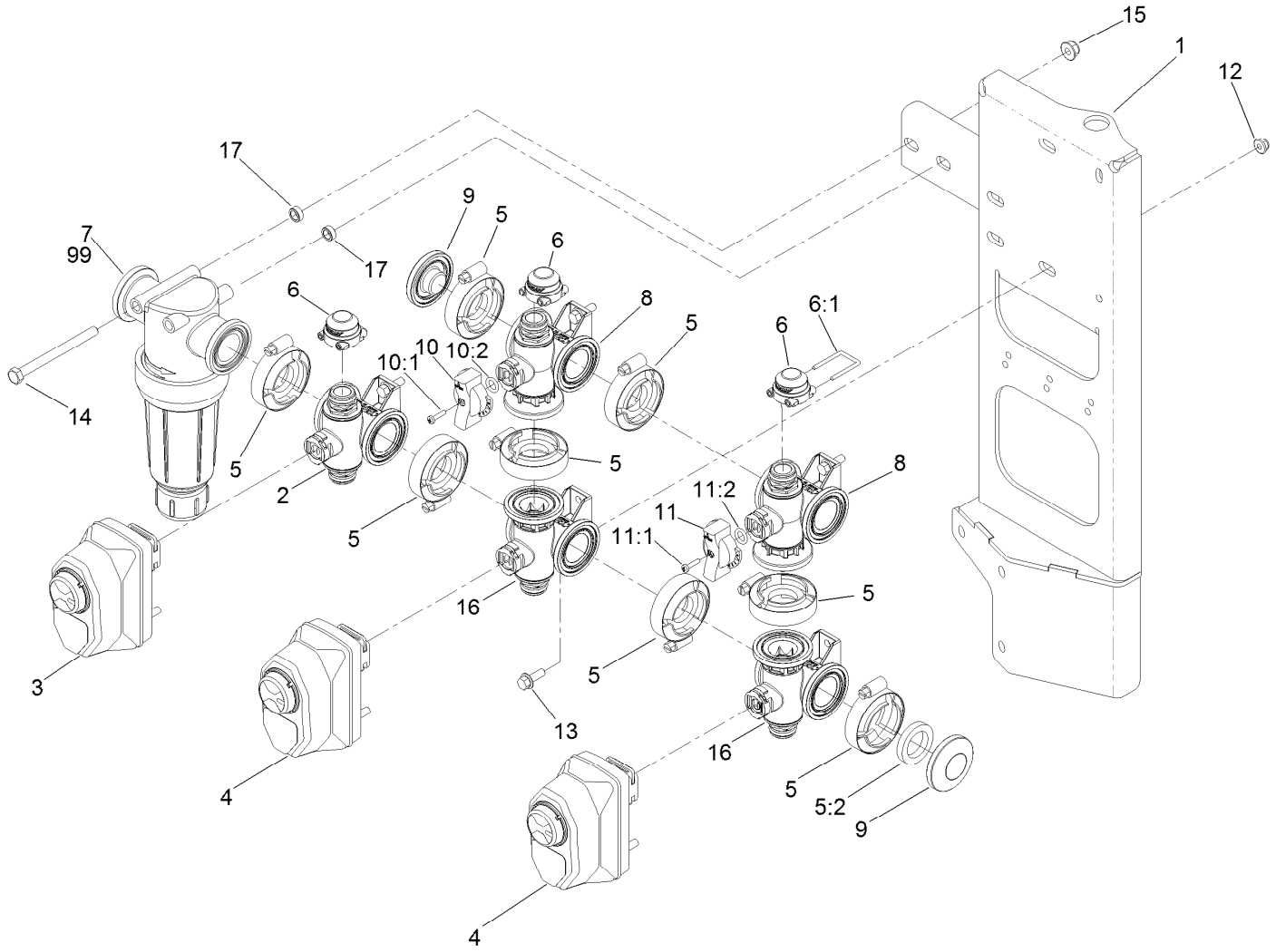

Agitation Valve Assembly

Ref.	Part Number	Qty.	Description
1	131-3722	1	Mount-Valve
2	127-9804	1	Regulating Valve Body ASM
3	131-3724	1	Actuator Regulating Kit
4	131-3723	2	Actuator On/Off Kit
5	127-9829	8	Clamp/Gasket Kit
5:2	127-1145	1	Gasket-Flange
6	127-9811	3	Fitting-Cap, Female
6:1	127-1175	1	Fork
7	131-3791	1	Filter-Pressure
8	131-0253	2	Manifold Valve Kit
9	127-9815	2	Fitting-Cap
10	131-0265	1	Agitation Regulating Handle Kit
10:1	131-0263	1	Screw-Handle
10:2	127-1197	1	O-Ring-Stem

Ref.	Part Number	Qty.	Description
11	131-0266	1	Master Regulating Handle Kit
11:1	131-0263	1	Screw-Handle
11:2	127-1197	1	O-Ring-Stem
12	104-7201	6	Nut-HF, NI
13	3234-4	6	Screw-HHF
14	322-23	2	Screw-HH
15	104-8300	2	Nut-HF, NI
16	131-7256	2	Manifold Valve Kit
17	133-0380	2	Spacer-Filter
99	133-0387	1	Screen-Teejet, 100 Mesh ●
99	133-0386	1	Screen-Teejet, 80 Mesh ●
99	133-0385	1	Screen-Teejet, 50 Mesh ●
99	133-0384	1	Screen-Teejet, 30 Mesh ●

● Optional Equipment

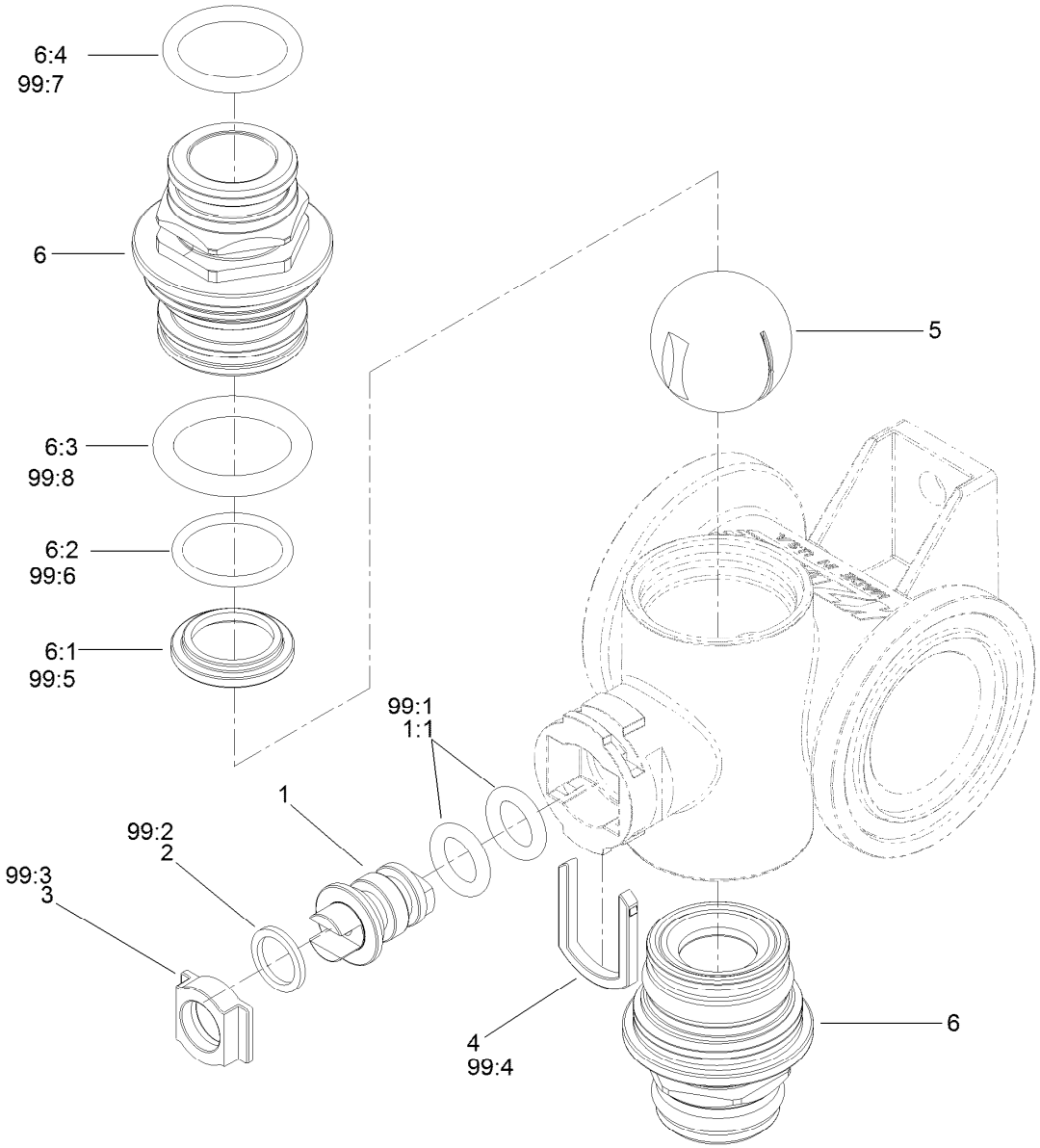

Regulating Valve Body Assembly No. 127-9804

Ref.	Part Number	Qty.	Description
1	130-8248	1	Vavle Stem Kit
1:1	127-1197	2	O-Ring-Stem
2	127-1196	1	Washer-Stem, Valve
3	127-1195	1	Seat-Stem, Valve
4	127-1190	1	Fork-Stem, Valve
5	127-1113	1	Ball-V
6	130-7317	2	Endcap Kit
6:1	127-1192	1	Seat-Ball
6:2	127-1188	1	O-Ring, Seat (Ball)
6:3	127-1189	1	O-Ring, Endcap

Ref.	Part Number	Qty.	Description
6:4	127-1187	1	O-Ring, Endcap
99	130-7304	1	Valve Repair Kit ●
99:1	127-1197	2	O-Ring-Stem
99:2	127-1196	2	Washer-Stem, Valve
99:3	127-1195	1	Seat-Stem, Valve
99:4	127-1190	1	Fork-Stem, Valve
99:5	127-1192	2	Seat-Ball
99:6	127-1188	2	O-Ring, Seat (Ball)
99:7	127-1187	2	O-Ring, Endcap
99:8	127-1189	2	O-Ring, Endcap

● Not illustrated

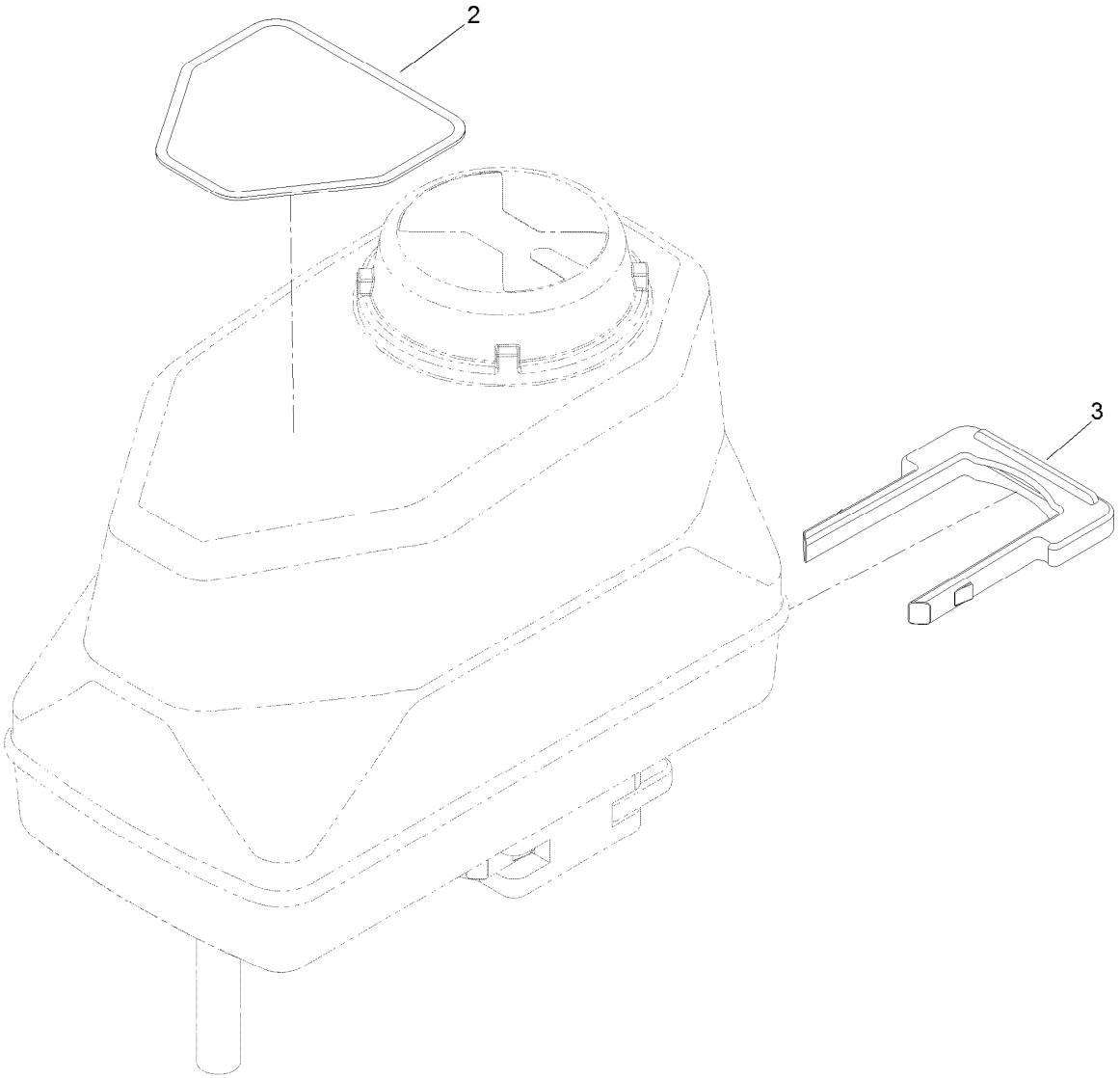

Actuator Regulating Valve No. 131-3724

Ref.	Part Number	Qty.	Description
2	127-6984	1	Decal-Valve, Regulating
3	130-7301	1	Hairpin-Actuator

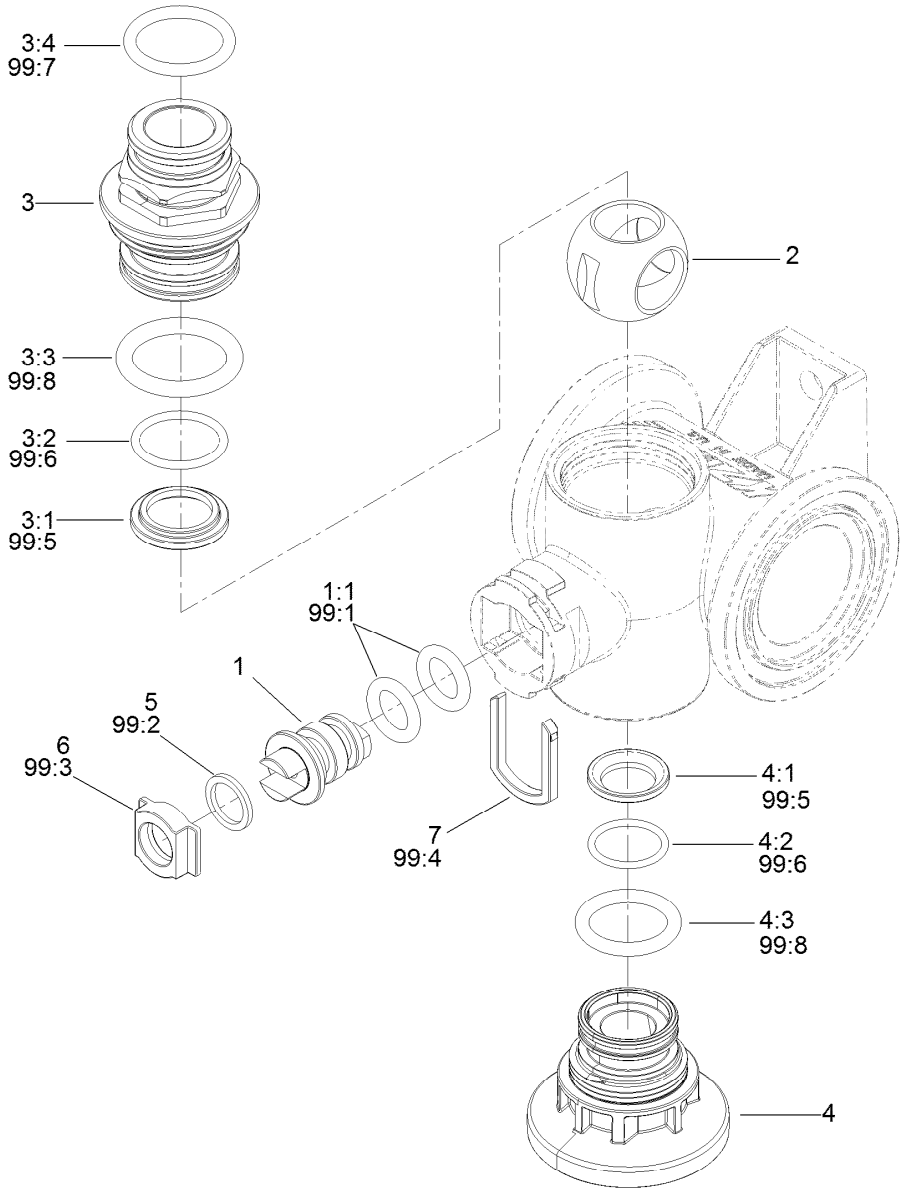

Manifold Valve Kit No. 131-0253

Ref.	Part Number	Qty.	Description
1	130-8248	1	Vavle Stem Kit
1:1	127-1197	2	O-Ring-Stem
2	127-1113	1	Ball-V
3	130-7317	1	Endcap Kit
3:1	127-1192	1	Seat-Ball
3:2	127-1188	1	O-Ring, Seat (Ball)
3:3	127-1189	1	O-Ring, Endcap
3:4	127-1187	1	O-Ring, Endcap
4	130-8249	1	Endcap Kit
4:1	127-1192	1	Seat-Ball
4:2	127-1188	1	O-Ring, Seat (Ball)
4:3	127-1189	1	O-Ring, Endcap

Ref.	Part Number	Qty.	Description
5	127-1196	1	Washer-Stem, Valve
6	127-1195	1	Seat-Stem, Valve
7	127-1190	1	Fork-Stem, Valve
99	130-7304	1	Valve Repair Kit ●
99:1	127-1197	2	O-Ring-Stem
99:2	127-1196	2	Washer-Stem, Valve
99:3	127-1195	1	Seat-Stem, Valve
99:4	127-1190	1	Fork-Stem, Valve
99:5	127-1192	2	Seat-Ball
99:6	127-1188	2	O-Ring, Seat (Ball)
99:7	127-1187	2	O-Ring, Endcap
99:8	127-1189	2	O-Ring, Endcap

● Not illustrated

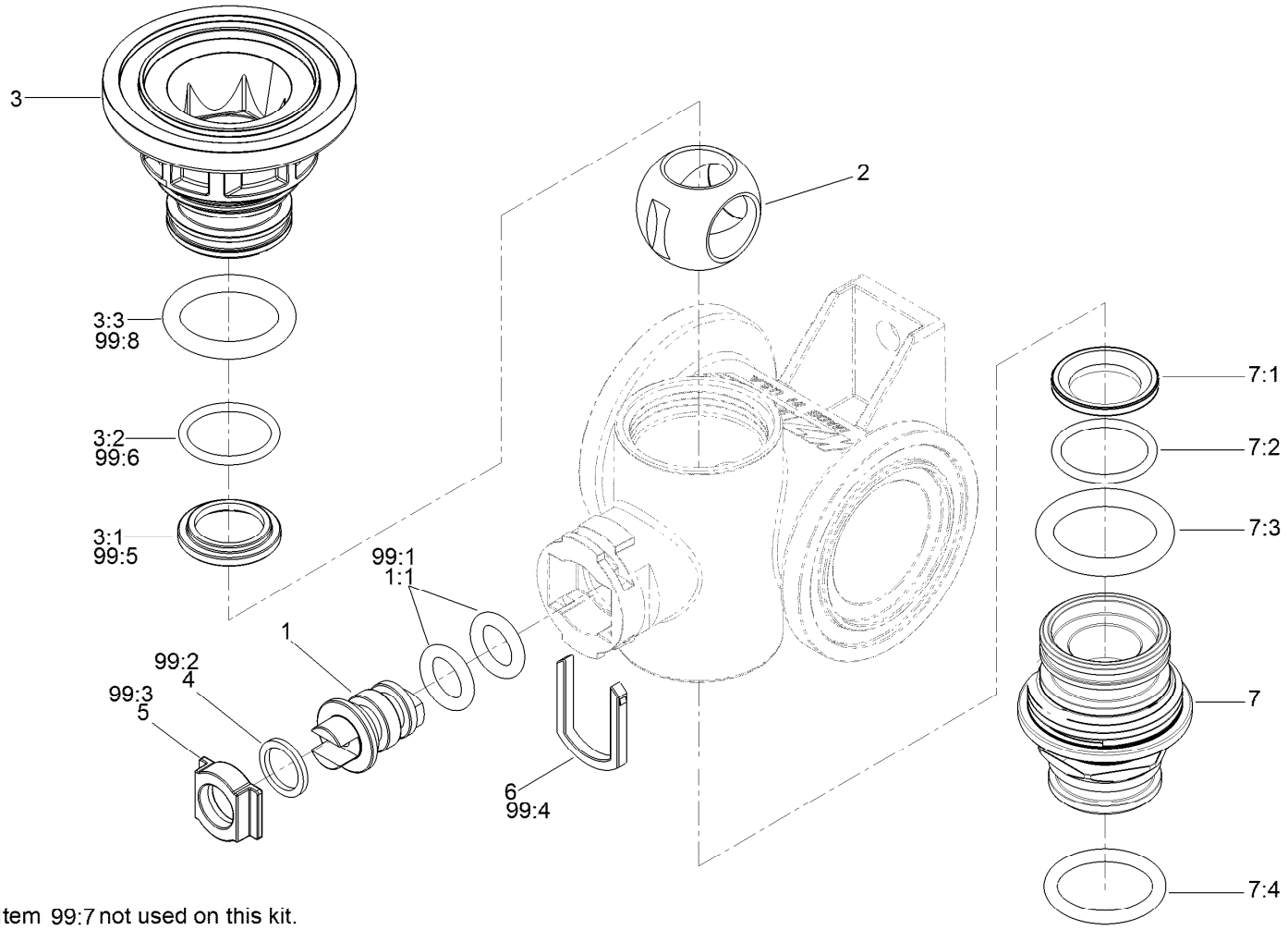

Item 99:7 not used on this kit.

Manifold Valve Kit No. 131-7256

Ref.	Part Number	Qty.	Description
1	130-8248	1	Vavle Stem Kit
1:1	127-1197	2	O-Ring-Stem
2	127-1194	1	Ball-Valve, 3Way
3	130-8249	1	Endcap Kit
3:1	127-1192	1	Seat-Ball
3:2	127-1188	1	O-Ring, Seat (Ball)
3:3	127-1189	1	O-Ring, Endcap
4	127-1196	1	Washer-Stem, Valve
5	127-1195	1	Seat-Stem, Valve
6	127-1190	1	Fork-Stem, Valve
7	130-7317	1	Endcap Kit
7:1	127-1192	1	Seat-Ball

Ref.	Part Number	Qty.	Description
7:2	127-1188	1	O-Ring, Seat (Ball)
7:3	127-1189	1	O-Ring, Endcap
7:4	127-1187	1	O-Ring, Endcap
99	130-7304	1	Valve Repair Kit ●
99:1	127-1197	2	O-Ring-Stem
99:2	127-1196	2	Washer-Stem, Valve
99:3	127-1195	1	Seat-Stem, Valve
99:4	127-1190	1	Fork-Stem, Valve
99:5	127-1192	2	Seat-Ball
99:6	127-1188	2	O-Ring, Seat (Ball)
99:7	127-1187	2	O-Ring, Endcap
99:8	127-1189	2	O-Ring, Endcap

● Not illustrated

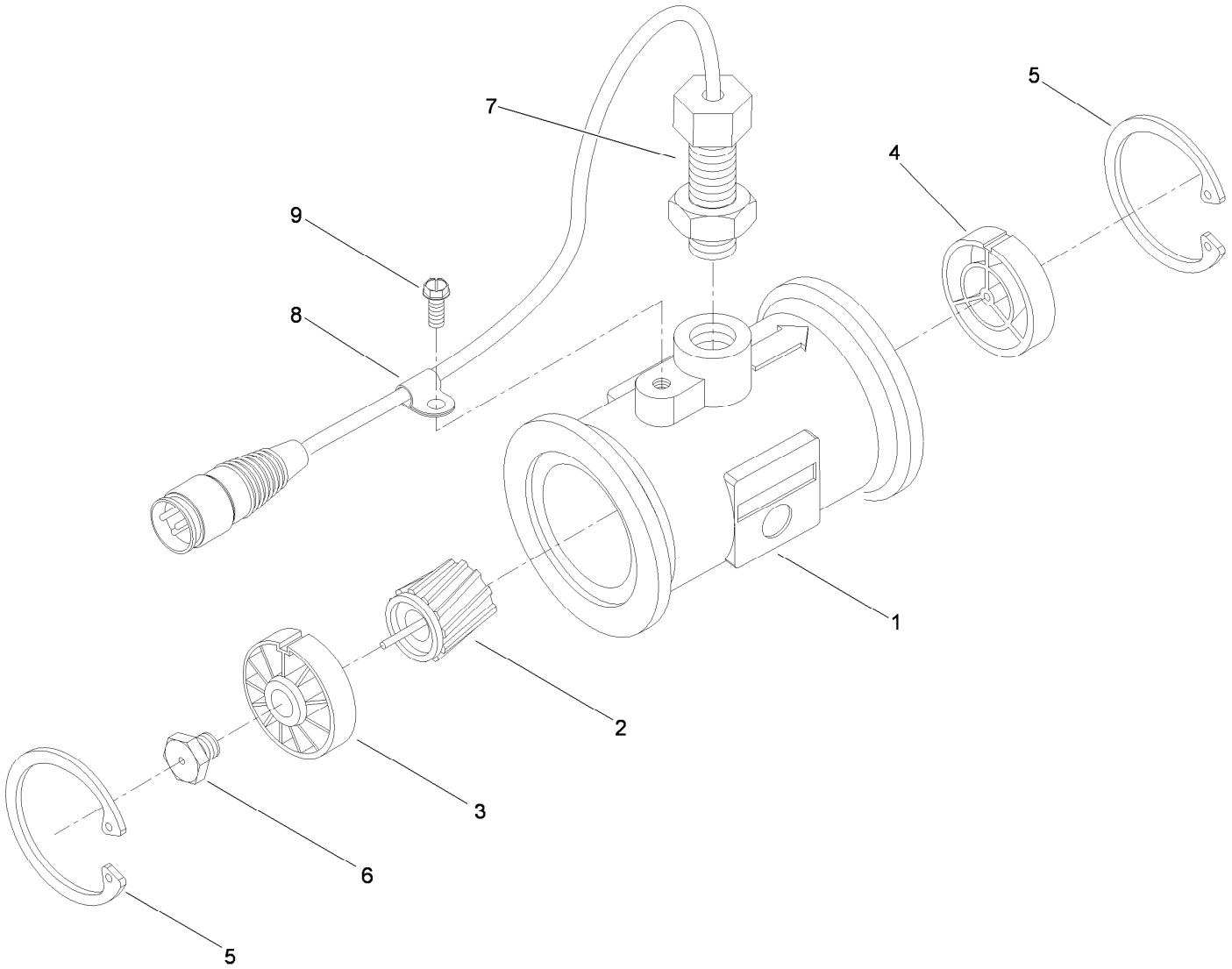

Flow Meter Assembly No. 106-1038

Ref.	*Part Number*	*Qty.*	*Description*
1	106-1042	1	Body-Meter, Flow
2	104-9059	1	Rotor / Magnet ASM
3	104-9060	1	Upstream Hub And Bearing ASM
4	104-9061	1	Downstream Hub ASM
5	104-9062	2	Ring-Retaining, Internal
6	42480	1	Stud-Turbine (W / Bearing)
7	104-9065	1	External Sensor ASM
8	104-9063	1	Clamp-Cable
9	104-9064	1	Screw-HWHTF

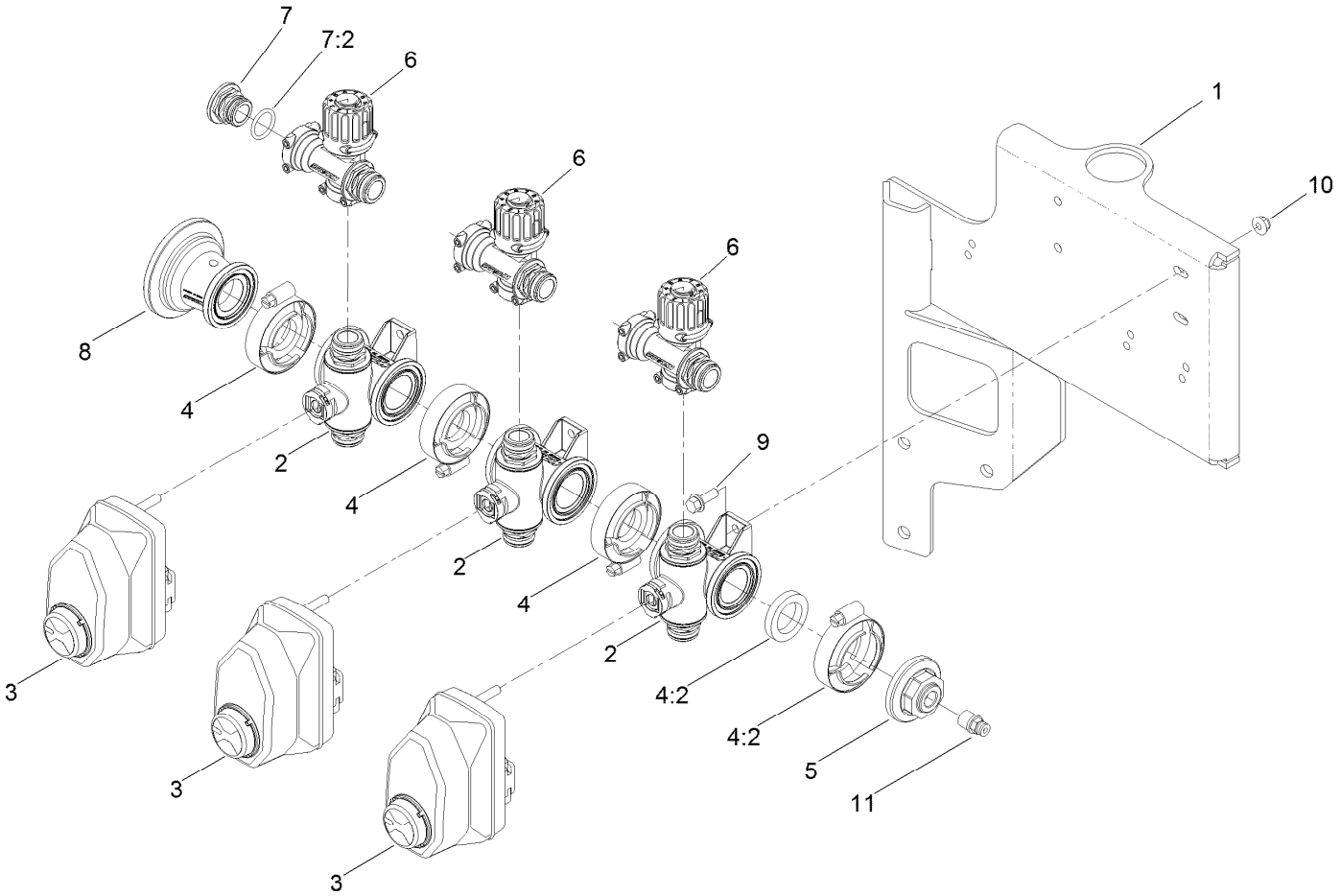

Section Valve Manifold Assembly

Ref.	*Part Number*	*Qty.*	*Description*
1	131-0258	1	Mount-Valves, Boom
2	127-9803	3	On/Off Manifold Valve Kit
3	131-3723	3	Actuator On/Off Kit
4	127-9829	4	Clamp/Gasket Kit
4:2	127-1145	1	Gasket-Flange
5	127-1185	1	Fitting-Cap, Port
6	127-9805	3	Bypass Valve ASM
7	127-9810	1	Male Cap Fitting Kit
7:2	127-1187	1	O-Ring, Endcap
8	127-1144	1	Fitting-Adapter
9	3234-4	4	Screw-HHF
10	104-7201	4	Nut-HF, NI
11	131-3709	1	Coupler

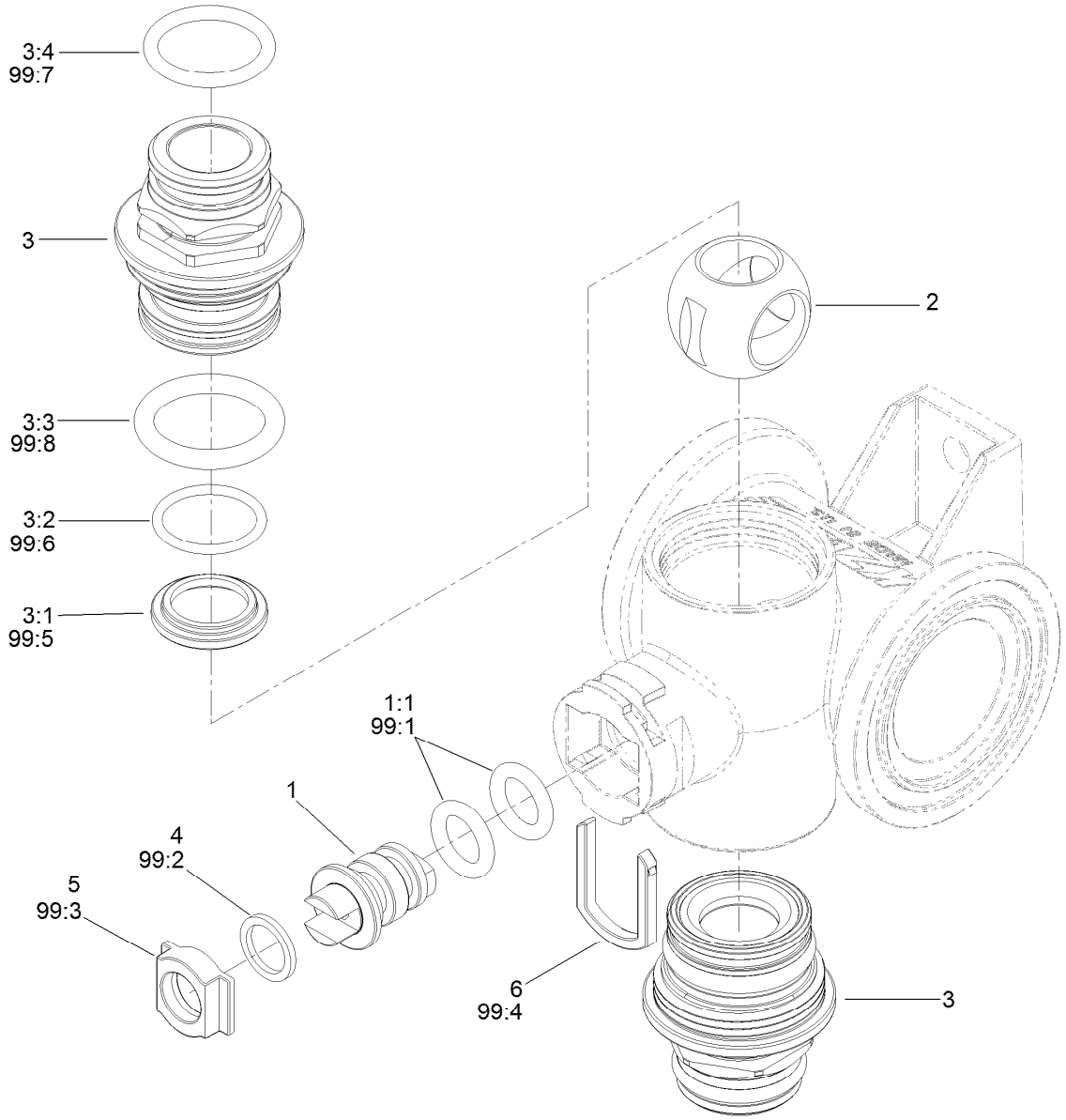

On/Off Manifold Valve Kit No. 127-9803

Ref.	Part Number	Qty.	Description
1	130-8248	1	Vavle Stem Kit
1:1	127-1197	2	O-Ring-Stem
2	127-1194	1	Ball-Valve, 3Way
3	130-7317	2	Endcap Kit
3:1	127-1192	1	Seat-Ball
3:2	127-1188	1	O-Ring, Seat (Ball)
3:3	127-1189	1	O-Ring, Endcap
3:4	127-1187	1	O-Ring, Endcap
4	127-1196	1	Washer-Stem, Valve
5	127-1195	1	Seat-Stem, Valve

Ref.	Part Number	Qty.	Description
6	127-1190	1	Fork-Stem, Valve
99	130-7304	1	Valve Repair Kit ●
99:1	127-1197	2	O-Ring-Stem
99:2	127-1196	2	Washer-Stem, Valve
99:3	127-1195	1	Seat-Stem, Valve
99:4	127-1190	1	Fork-Stem, Valve
99:5	127-1192	2	Seat-Ball
99:6	127-1188	2	O-Ring, Seat (Ball)
99:7	127-1187	2	O-Ring, Endcap
99:8	127-1189	2	O-Ring, Endcap

● Not illustrated

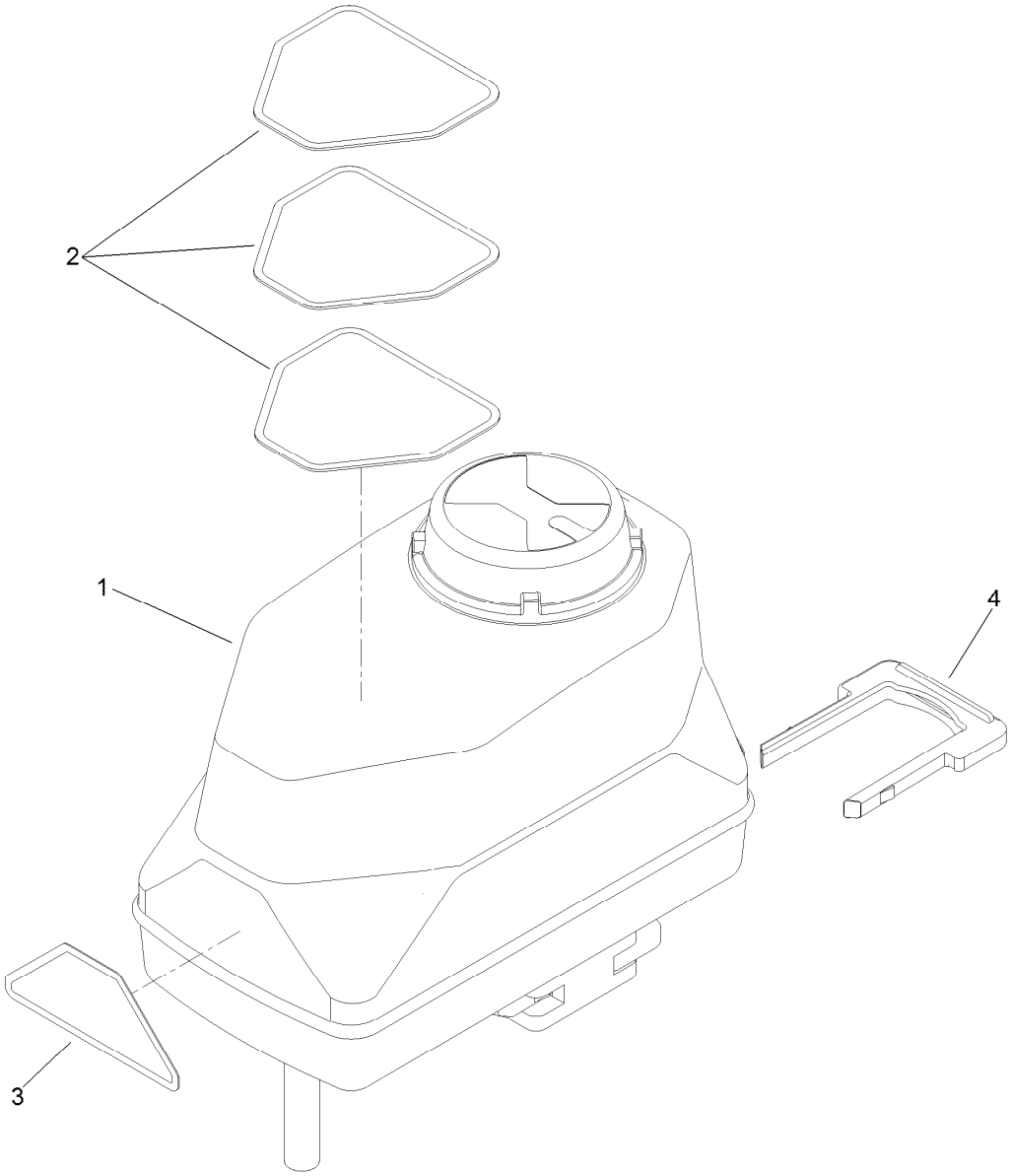

Actuator On/Off Kit No. 131-3723

Ref.	*Part Number*	*Qty.*	*Description*
1	127-9801	1	Actuator-On/Off
2	127-6979	1	Decal-Valve, Agitation
2	127-6981	1	Decal-Valve, On/Off
2	127-6982	1	Decal-Valve, Master Boom
3	127-6976	1	Decal-Valve, Bypass Adjust
4	130-7301	1	Hairpin-Actuator

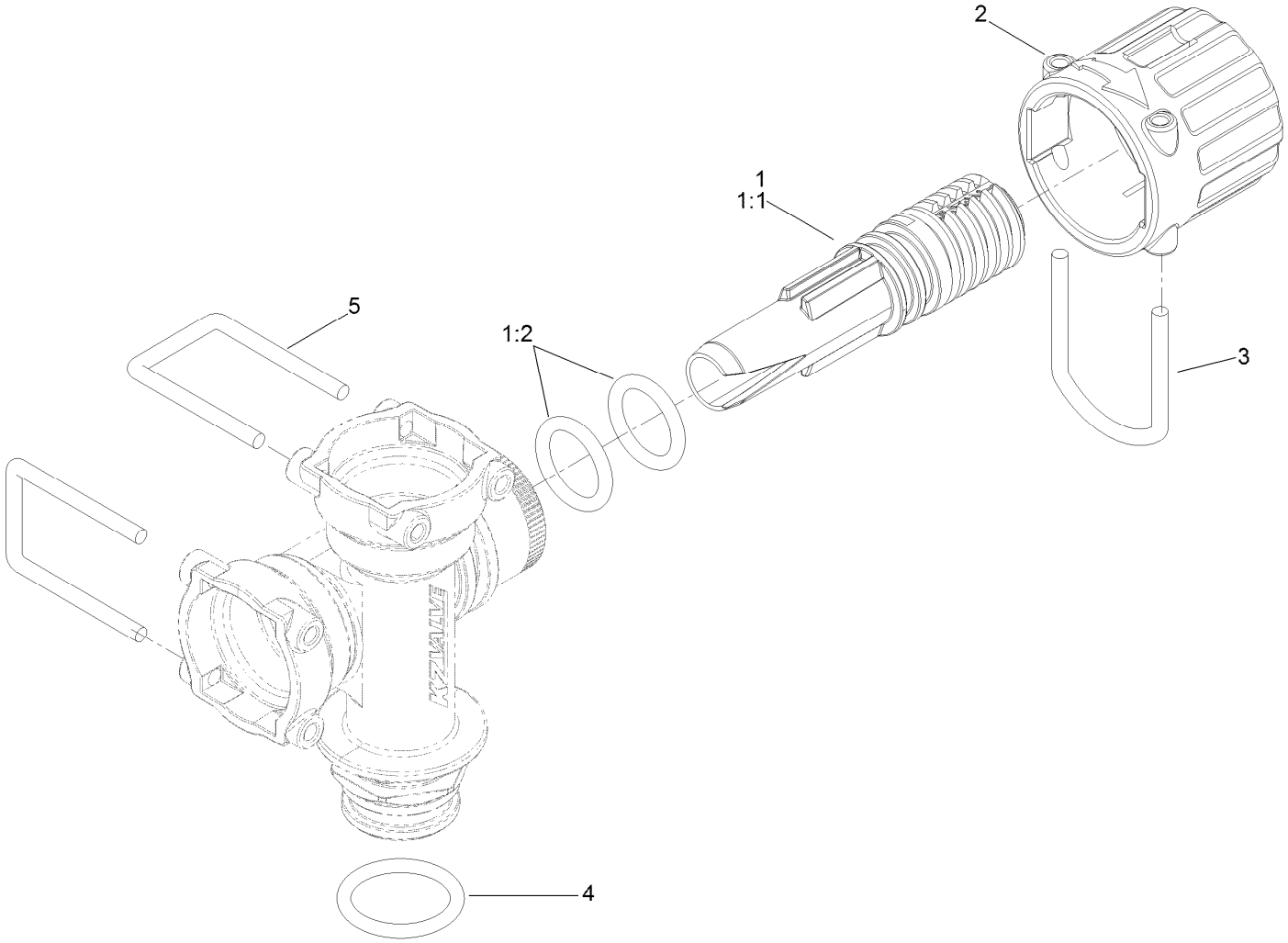

Bypass Valve Assembly No. 127-9805

Ref.	*Part Number*	*Qty.*	*Description*
1	131-0298	1	Bypass Needle Kit
1:1	127-1182	1	Needle-Bypass
1:2	127-1181	2	Oring-Bypass Needle
2	127-1180	1	Knob-Bypass
3	127-1179	1	Fork-Bypass Knob
4	127-1187	1	O-Ring, Endcap
5	127-1175	2	Fork

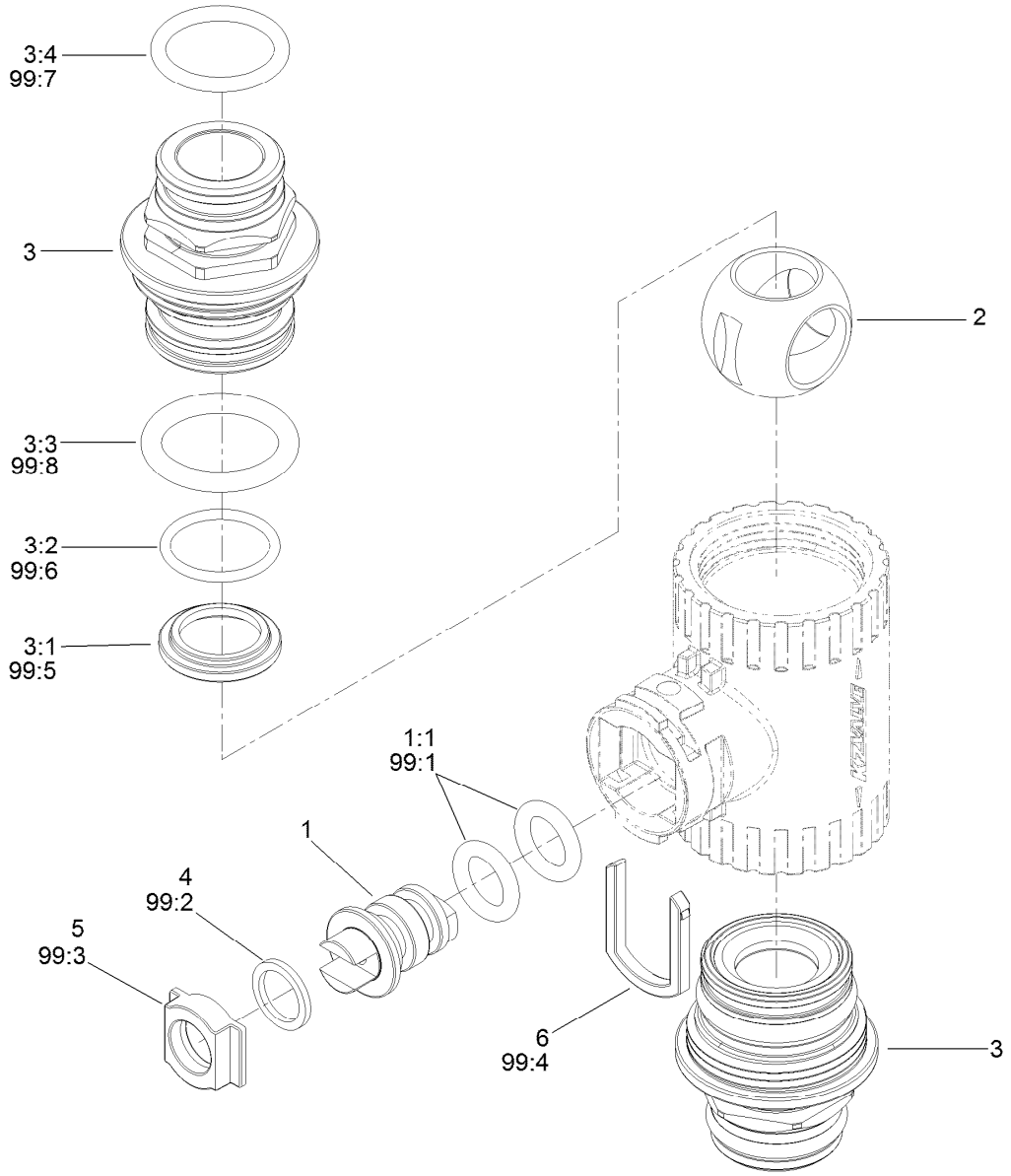

On/Off 2-Way Valve Kit No. 131-0249

Ref.	Part Number	Qty.	Description
1	130-8248	1	Vavle Stem Kit
1:1	127-1197	2	O-Ring-Stem
2	131-0252	1	Ball-2-Way
3	130-7317	2	Endcap Kit
3:1	127-1192	1	Seat-Ball
3:2	127-1188	1	O-Ring, Seat (Ball)
3:3	127-1189	1	O-Ring, Endcap
3:4	127-1187	1	O-Ring, Endcap
4	127-1196	1	Washer-Stem, Valve
5	127-1195	1	Seat-Stem, Valve

Ref.	Part Number	Qty.	Description
6	127-1190	1	Fork-Stem, Valve
99	130-7304	1	Valve Repair Kit ●
99:1	127-1197	2	O-Ring-Stem
99:2	127-1196	2	Washer-Stem, Valve
99:3	127-1195	1	Seat-Stem, Valve
99:4	127-1190	1	Fork-Stem, Valve
99:5	127-1192	2	Seat-Ball
99:6	127-1188	2	O-Ring, Seat (Ball)
99:7	127-1187	2	O-Ring, Endcap
99:8	127-1189	2	O-Ring, Endcap

● Not illustrated

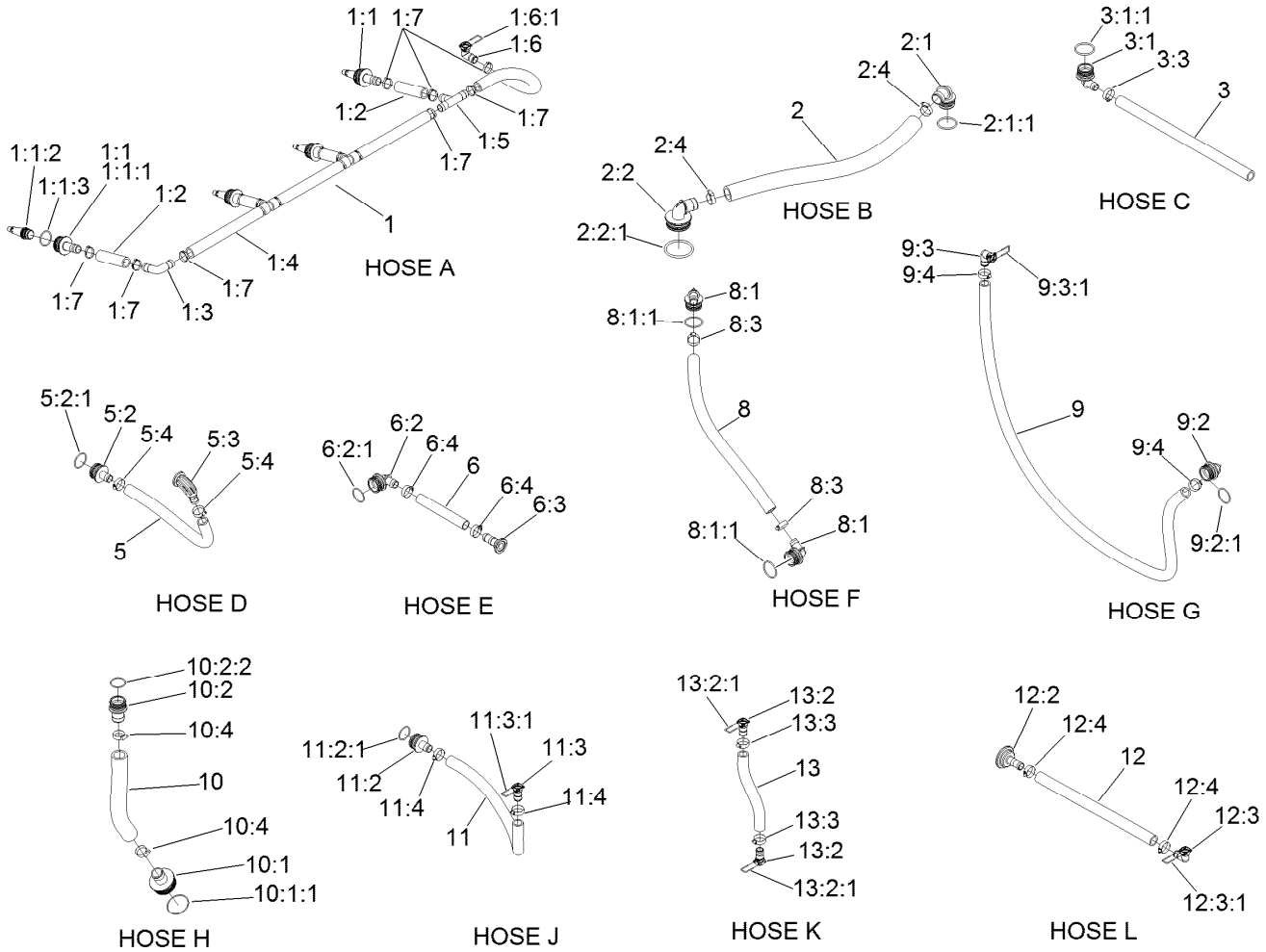

Reference **Spray Tank Assembly** page and **Spray Tank Valve Assembly** page for hose locations and orientation

Hose Assembly

Ref.	Part Number	Qty.	Description
1	132-4327	1	Hose-Agitation
1:1	131-3731	4	Agitation Nozzle ASM
1:1:1	131-3732	1	Fitting-Barb
1:1:2	120-8579	1	Nozzle-Agitation
1:1:3	121-4996	1	O-Ring
1:2	119-0441	4	Hose-Agitaiton
1:3	117-7867	1	Elbow-Hosebarb
1:4	117-7862	3	Hose-Main Agitation
1:5	117-7866	3	Tee-Hosebarb
1:6	131-0213	1	90 DEG Barb Fitting Kit
1:6:1	127-1175	1	Fork
1:7	2412-3	16	Clamp-Hose
2	125-0645	1	Upper Suction Hose ASM
2:1	110-5156	1	Suction Elbow ASM
2:1:1	100-8637	1	O-Ring
2:2	106-4952	1	Hosebarb-90 DEG
2:2:1	100-6989	1	O-Ring
2:4	41327	2	Clamp-Hose
3	125-0647	1	Drain Hose ASM
3:1	106-4933	1	Hosebarb ASM
3:1:1	100-8637	1	O-Ring

Ref.	Part Number	Qty.	Description
3:3	2412-34	1	Clamp-Hose
5	132-4329	1	Hose-Supply
5:2	106-4932	1	Hosebarb-Straight
5:2:1	100-8637	1	O-Ring
5:3	131-0241	1	Fitting-Elb 90
5:4	2412-34	2	Clamp-Hose
6	132-4331	1	Hose-Agitation, Bypass
6:2	106-4933	1	Hosebarb ASM
6:2:1	100-8637	1	O-Ring
6:3	127-1142	1	Fitting-STR
6:4	2412-34	2	Clamp-Hose
8	125-0639	1	Regulating Hose ASM
8:1	106-4933	2	Hosebarb ASM
8:1:1	100-8637	1	O-Ring
8:3	2412-34	2	Clamp-Hose
9	132-4333	1	Hose-Bypass
9:2	106-4933	1	Hosebarb ASM
9:2:1	100-8637	1	O-Ring
9:3	131-0213	1	90 DEG Barb Fitting Kit
9:3:1	127-1175	1	Fork
9:4	2412-34	2	Clamp-Hose

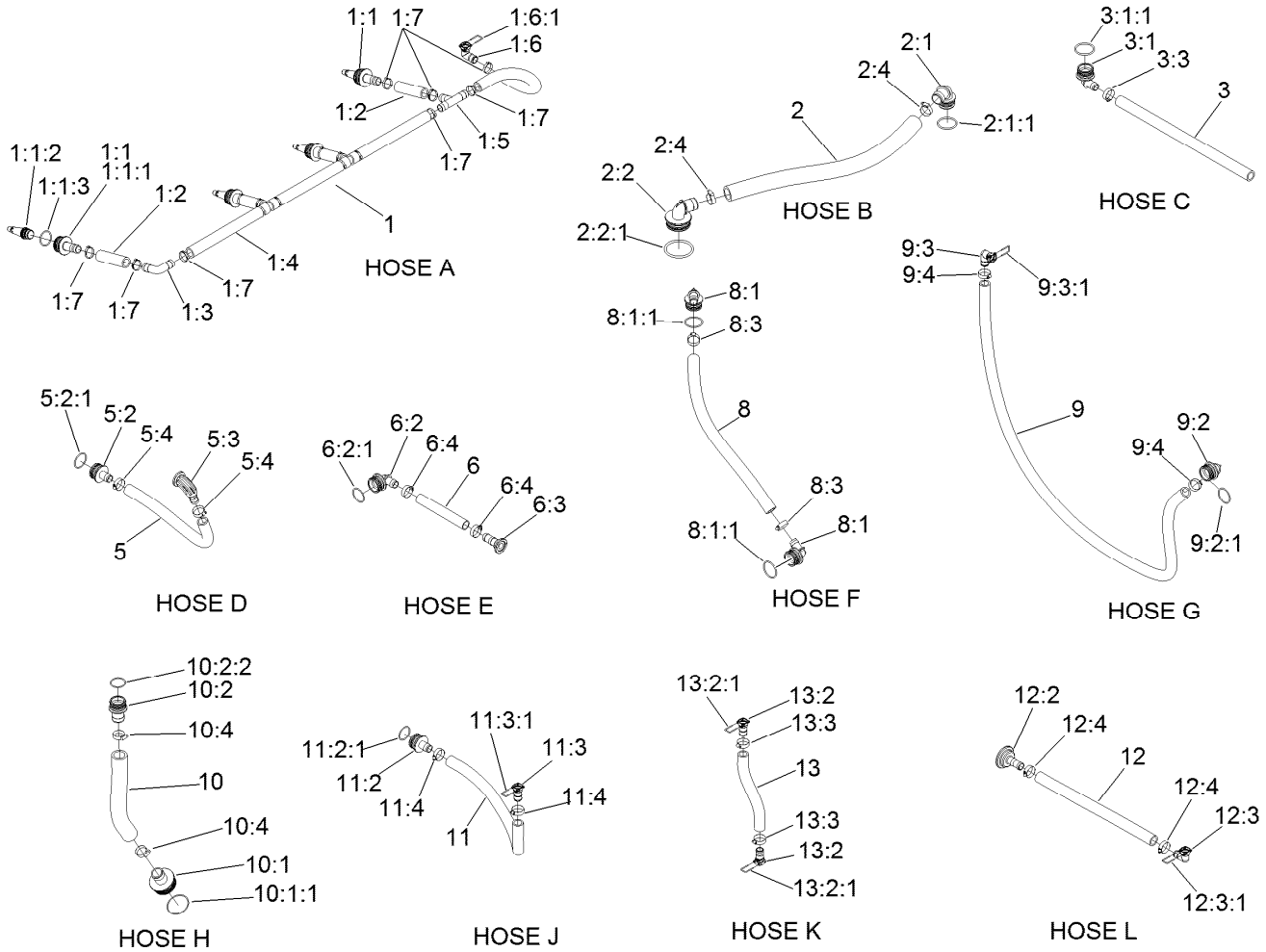

Reference **Spray Tank Assembly** page and **Spray Tank Valve Assembly** page for hose locations and orientation

Hose Assembly (continued)

Ref.	*Part Number*	*Qty.*	*Description*
10	125-0643	1	Lower Suction Hose ASM
10:1	117-7965	1	Hosebarb ASM
10:1:1	100-6989	1	O-Ring
10:2	117-7982	1	Hosebarb ASM
10:2:2	100-8637	1	O-Ring
10:4	41327	2	Clamp-Hose
11	132-4330	1	Hose-Regulating
11:2	106-4932	1	Hosebarb-Straight
11:2:1	100-8637	1	O-Ring
11:3	127-9806	1	Fitting Kit
11:3:1	127-1175	1	Fork

Ref.	*Part Number*	*Qty.*	*Description*
11:4	2412-34	2	Clamp-Hose
12	132-4332	1	Hose-Master
12:2	107-8704	1	Hosebarb
12:3	131-0213	1	90 DEG Barb Fitting Kit
12:3:1	127-1175	1	Fork
12:4	2412-34	2	Clamp-Hose
13	132-4326	1	Hose-Agitation, Supply
13:2	127-9806	2	Fitting Kit
13:2:1	127-1175	1	Fork
13:3	2412-34	2	Clamp-Hose

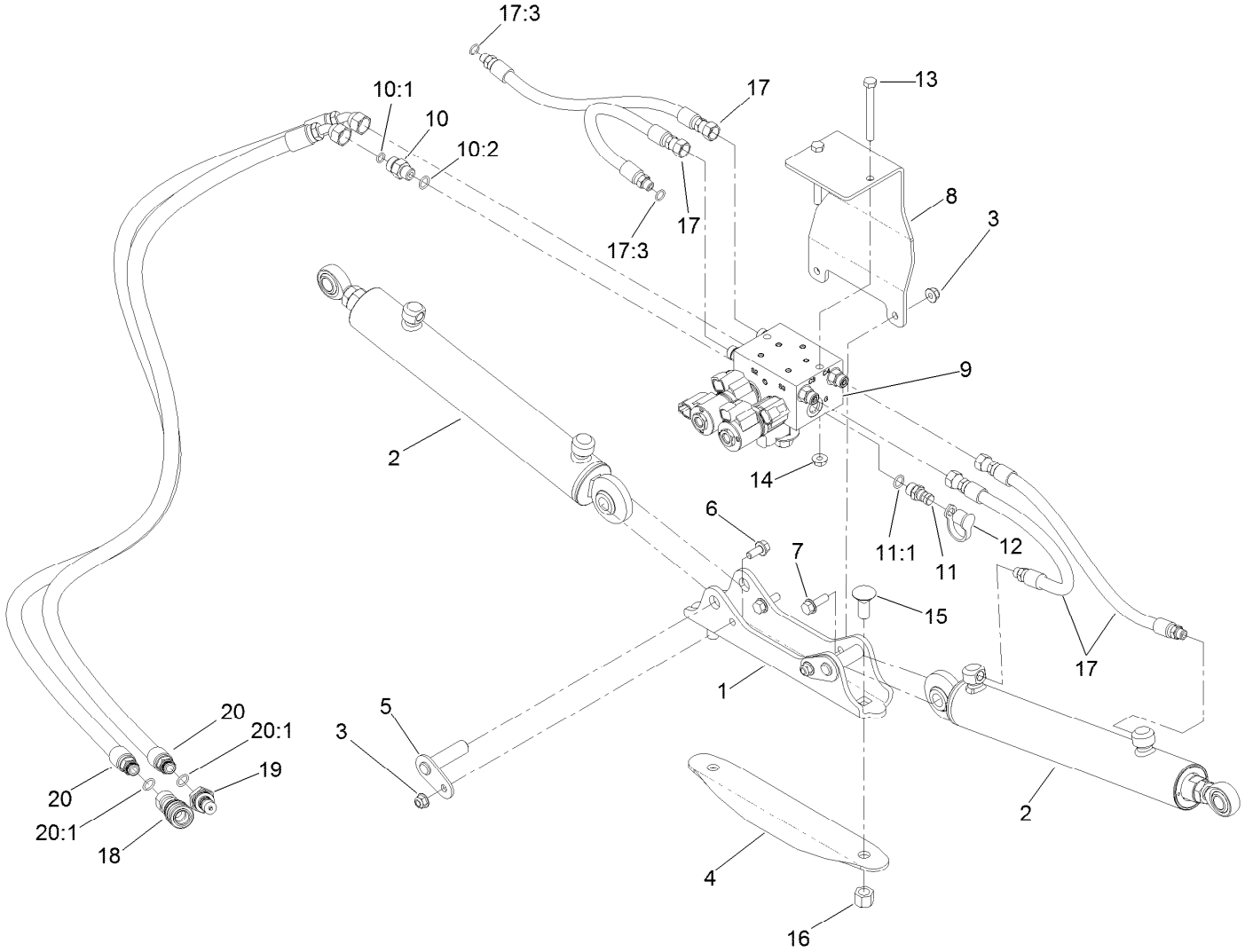

Boom Lift Assembly

Ref.	Part Number	Qty.	Description
1	119-4856-03	1	Plate-Mount, Cylinders
2	117-0701	2	Hydraulic Cylinder ASM
3	104-8300	4	Nut-HF, NI
4	131-0297-03	1	Plate-Stiffener, Boom
5	112-7884	2	Pin-Pivot
6	110-5053	2	Screw-HHF
7	3234-29	2	Screw-HHF
8	130-8201-03	1	Mount-Valve
9	117-0702	1	On-Off Boom Lift Valve ASM
10	340-2	2	Fitting-Straight
10:1	237-22	1	O-Ring
10:2	237-42	1	O-Ring
11	59-7410	1	Fitting-Diagnostic

Ref.	Part Number	Qty.	Description
11:1	237-42	1	O-Ring
12	354-79	1	Cap-Dust
13	322-14	2	Screw-HH
14	32128-26	2	Nut-HF
15	110-5067	2	Screw-CARR
16	3296-23	2	Nut-Lock, NI
17	119-4859	4	Hose ASM
17:3	237-78	1	O-Ring
18	106-7968	1	Coupler-Quick, Female
19	106-7969	1	Coupler-Quick, Male
20	127-9717	2	Hose ASM
20:1	237-42	1	O-Ring

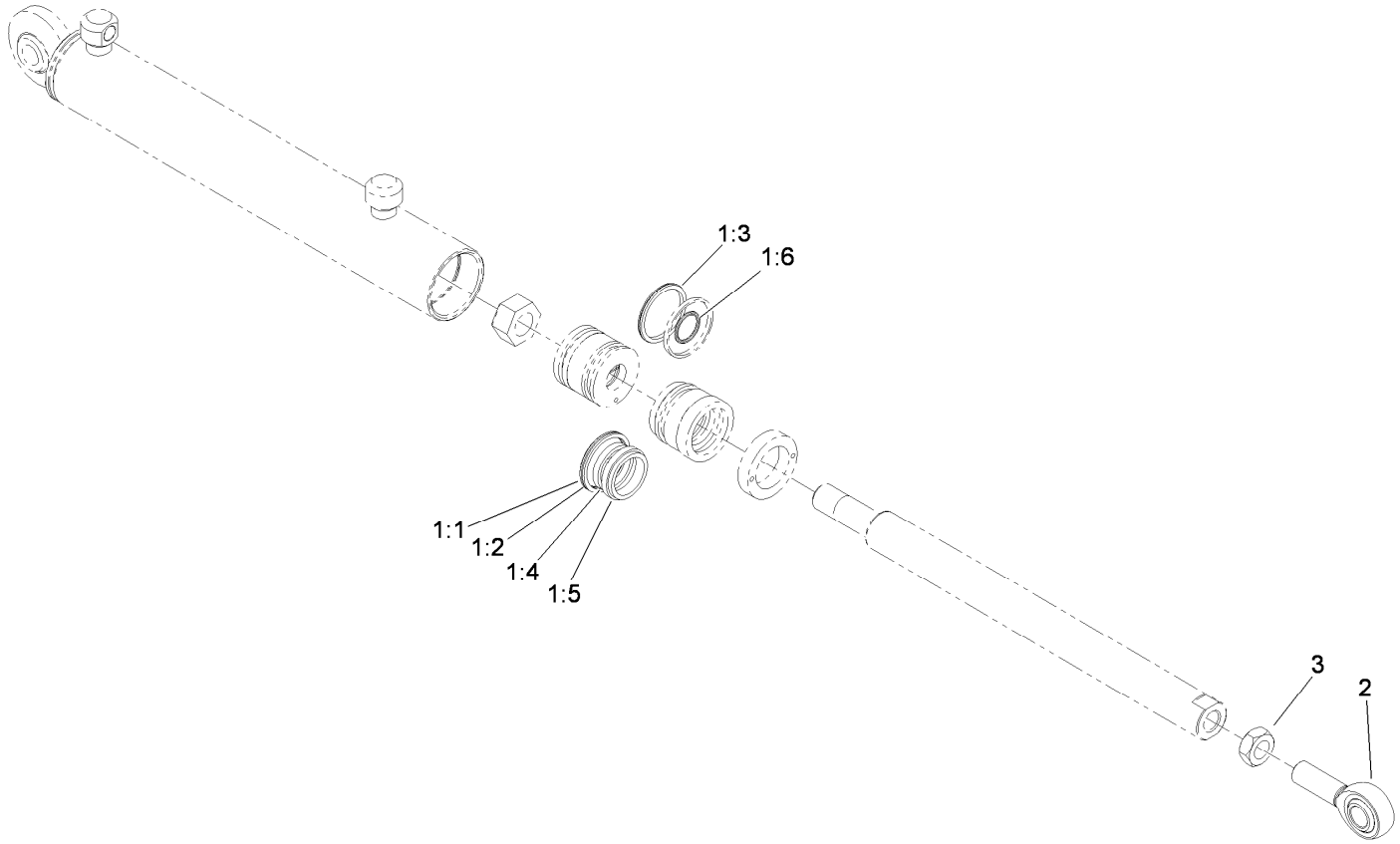

Hydraulic Cylinder Assembly No. 117-0701

Ref.	*Part Number*	*Qty.*	*Description*
1	119-8026	1	Seal Kit ●
1:1		1	O-Ring ■
1:2		1	Ring-Backup ■
1:3		1	Bp Seal ■
1:4		1	Bs Seal ■
1:5		1	Dust Seal ■
1:6		1	O-Ring ■
2	119-8027	1	Rod End
3	3220-6	1	Nut-Jam

● Not illustrated

■ Not serviced separately

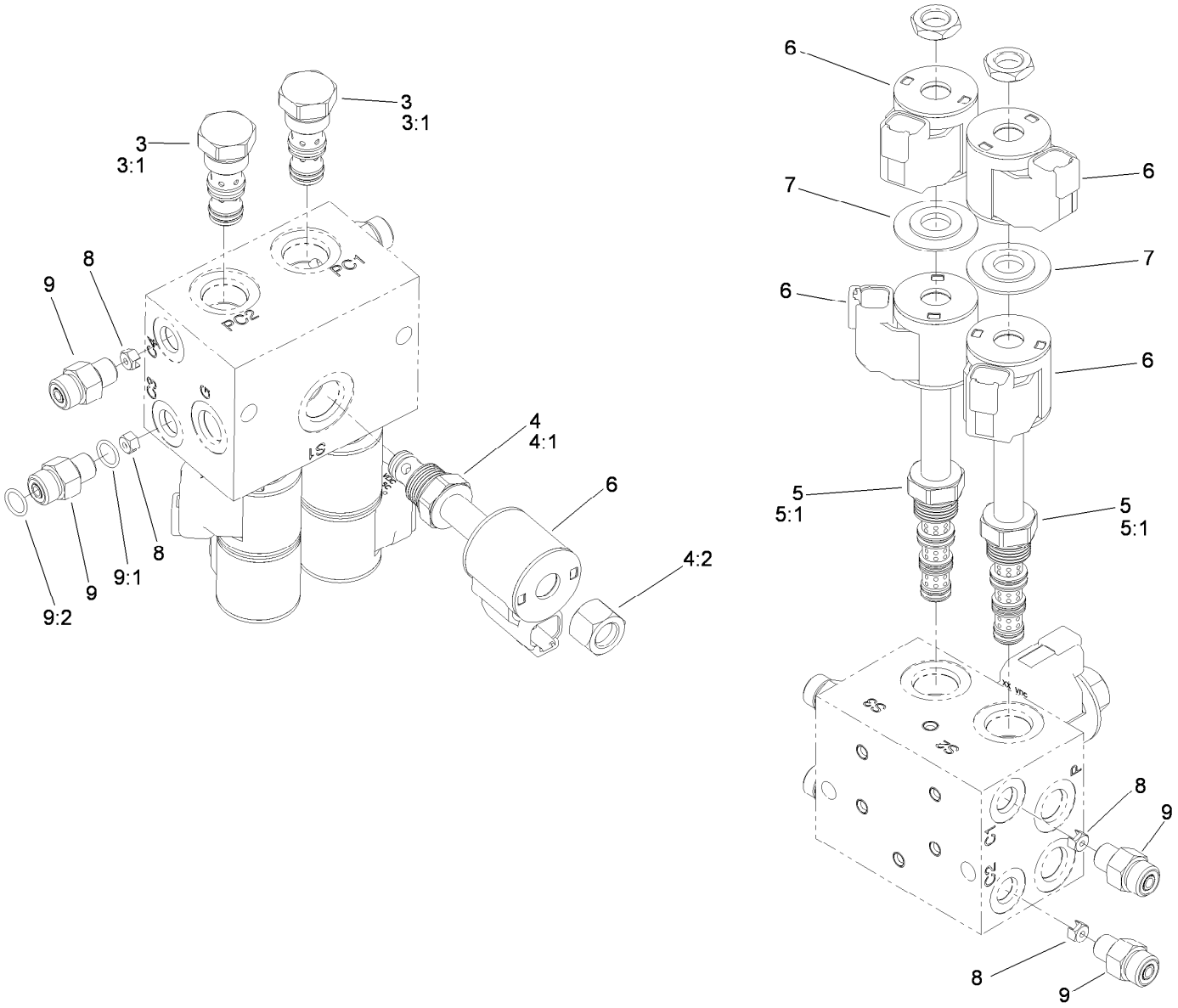

On-Off Boom Lift Valve No. 117-0702

Ref.	*Part Number*	*Qty.*	*Description*
3	120-2588	2	Valve-Check
3:1	120-0886	1	Seal Kit ●
4	107-7517	1	Valve-Solenoid
4:1	105-9156	1	Seal Kit
4:2	107-7812	1	Nut-Solenoid
5	120-2587	2	Valve-Solenoid
5:1	112-6520	1	Seal Kit ●
6	119-8036	5	Coil
7	120-2586	2	Spacer-Coil
8	120-2585	4	Orifice, .035
9	340-92	4	Fitting-Straight
9:1	237-78	1	O-Ring
9:2	237-21	1	O-Ring

● Not illustrated

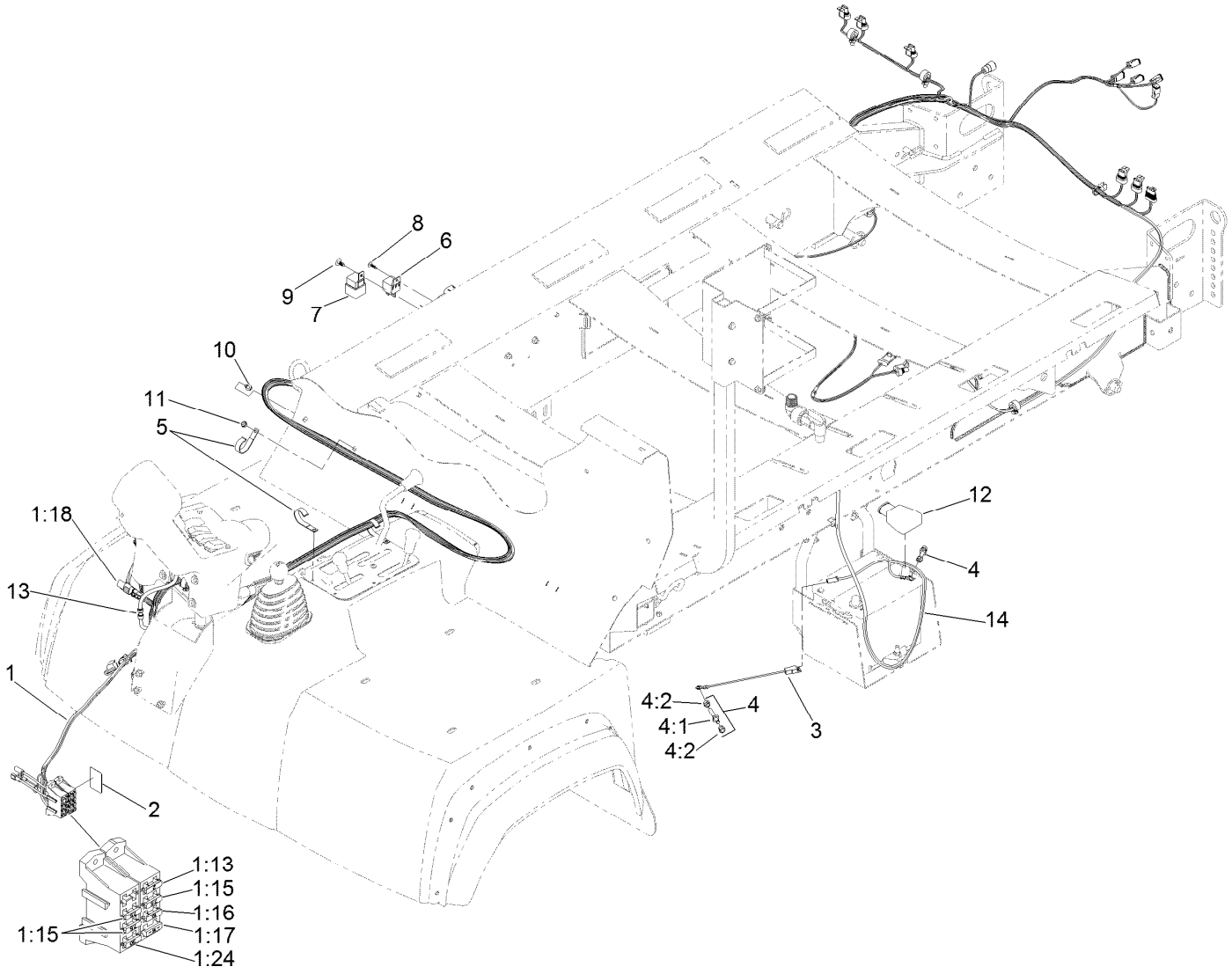

Electrical Assembly

Ref.	Part Number	Qty.	Description
1	122-0735	1	Harness-Wire, Front
1:13	94-6710	1	Fuse-2 Amp
1:15	114241	3	Fuse-Blade, 7.5 Amp
1:16	218-578	1	Fuse-Blade, 10 Amp
1:17	109355	1	Fuse-Blade, 15 Amp
1:18	32180-043	2	Resistor-120 Ohm
1:24	109103	1	Fuse-Blade, 30 Amp
2	127-3966	1	Decal-Fuse Block
3	108-9455	1	Harness-Wire, Fusible Link
4	112-9921	2	Bolt ASM
4:1	32180-107	1	Bolt-Clamp, Battery

Ref.	Part Number	Qty.	Description
4:2	32180-108	2	Nut-Hex Shoulder
5	106-1429	3	Clamp-J
6	99-7435	1	Relay
7	99-7430	1	Relay-Mini
8	125-8067	1	Plug-Plastic
9	104-0395	1	Plug-Plastic
10	3234-13	1	Screw-HHF
11	104-7201	1	Nut-HF, NI
12	32180-110	1	Insulator-Lead Cast
13	132-7773	1	Connector-Hose
14	122-0736	1	Harness-Wire, Rear

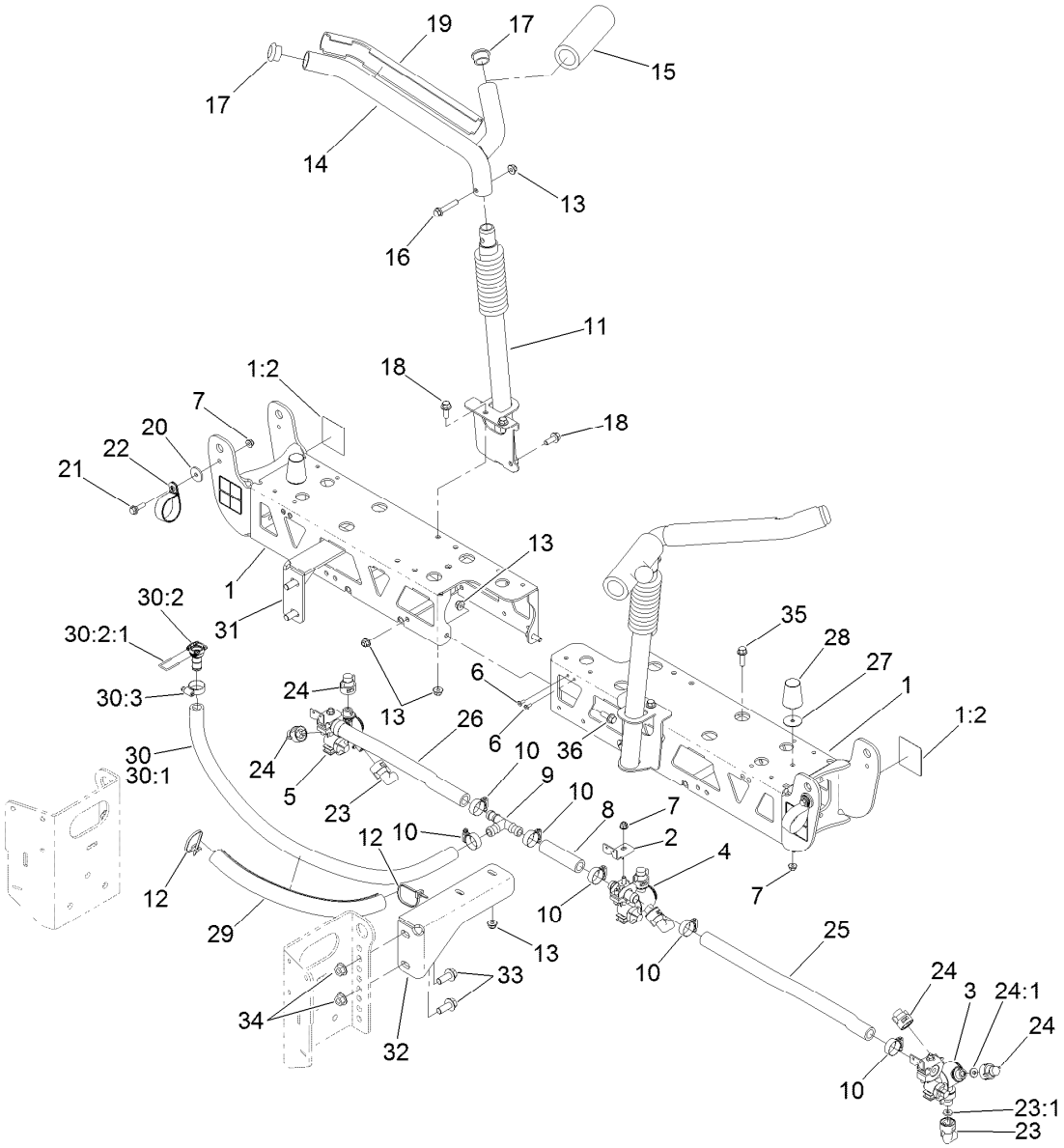

Center Boom Assembly

Ref.	Part Number	Qty.	Description
1	131-7268	2	Boom-Outer
1:2	120-0617	2	Decal-Warning, Pinch, Crush
2	107-8775-03	3	Bracket-Nozzle Mount
3	108-3725	1	LH Single Body Turret ASM
4	108-3727	1	Double Turret Body ASM
5	108-3726	1	RH Single Body Turret ASM
6	114439	6	Rivet-Blind
7	104-8300	7	Nut-HF, NI
8	108-3717	1	Hose-Boom
9	108-3439	1	Tee
10	2412-129	7	Clamp-Hose
11	130-8238-03	2	Lower Cradle ASM
12	3290-378	2	Tie-Cable
13	104-8301	14	Nut-HF, NI
14	108-3476-03	2	Cradle-Upper
15	108-3457	2	Spacer
16	108-3742	2	Screw-HHF
17	108-3489	4	Cap-Tube
18	110-5052	6	Screw-HHF
19	108-3495	2	Cover-Slide

Ref.	Part Number	Qty.	Description
20	108-3743	2	Washer
21	108-3744	2	Screw-Shoulder
22	114-9566	2	Clamp-R
23	95-9186	3	Cap
23:1	40998	1	Seat-Gasket
24	95-9187	6	Cap-Blank
24:1	40998	1	Seat-Gasket
25	108-3735	1	Hose-Boom, Center (LH)
26	108-3718	1	Hose-Boom, Center (RH)
27	3256-68	2	Washer-Flat
28	110-5070	2	Bumper
29	127-3923RT02	1	Conduit
30	132-4335	1	Hose-Center Boom
30:1	127-9770	1	Hose-Shutoff
30:2	127-9807	1	Straight Fitting Kit
30:2:1	127-1175	1	Fork
30:3	2412-129	1	Clamp-Hose
31	127-8955-03	1	Mount-Boom
32	127-8956-03	1	Mount-Boom
33	110-5057	4	Capscrew-HHF
34	108-3745	4	Nut-HHF, Whiz

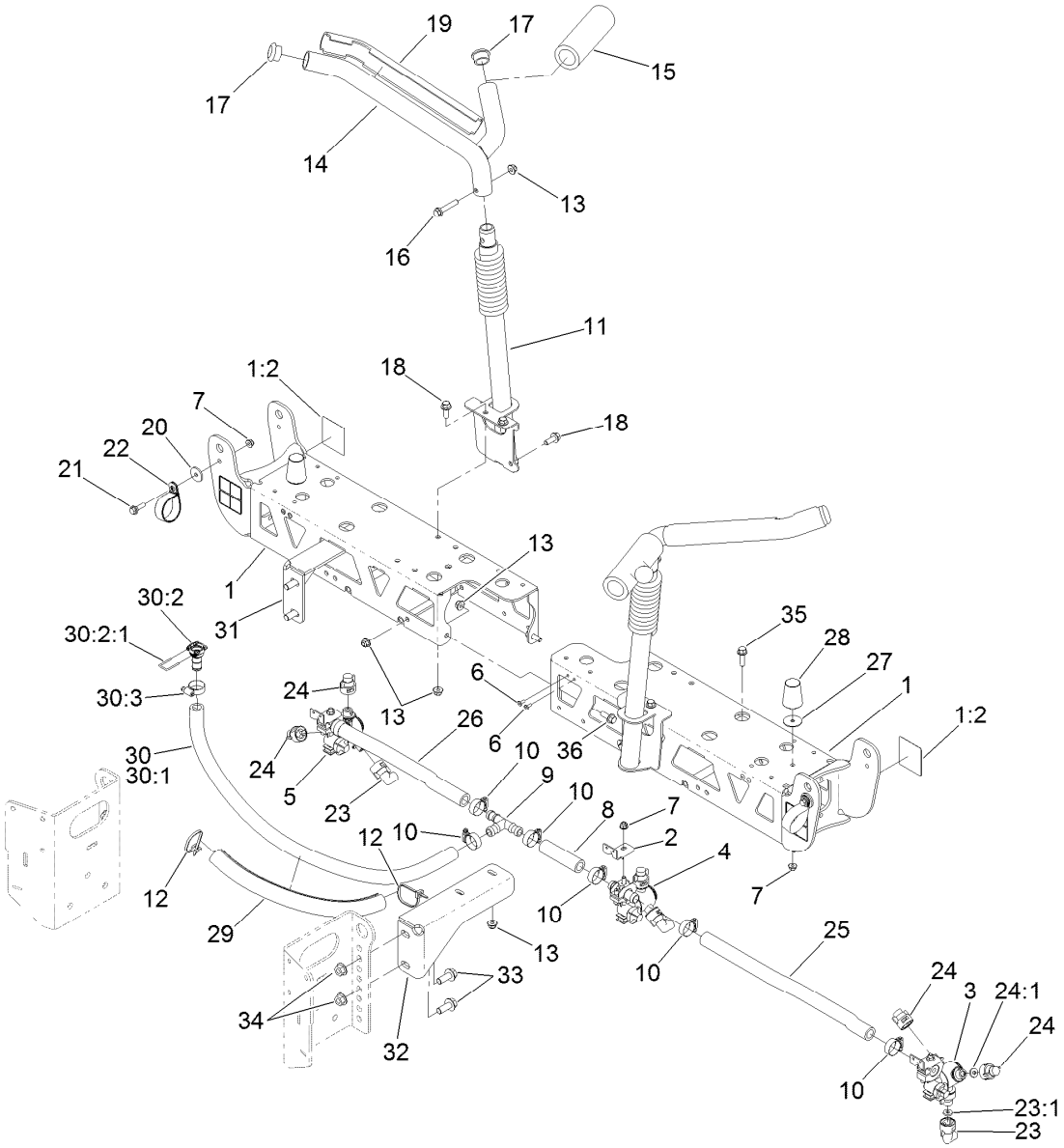

Center Boom Assembly (continued)

Ref.	Part Number	Qty.	Description
35	110-5050	4	Screw-HHF
36	3234-42	2	Screw-HHF

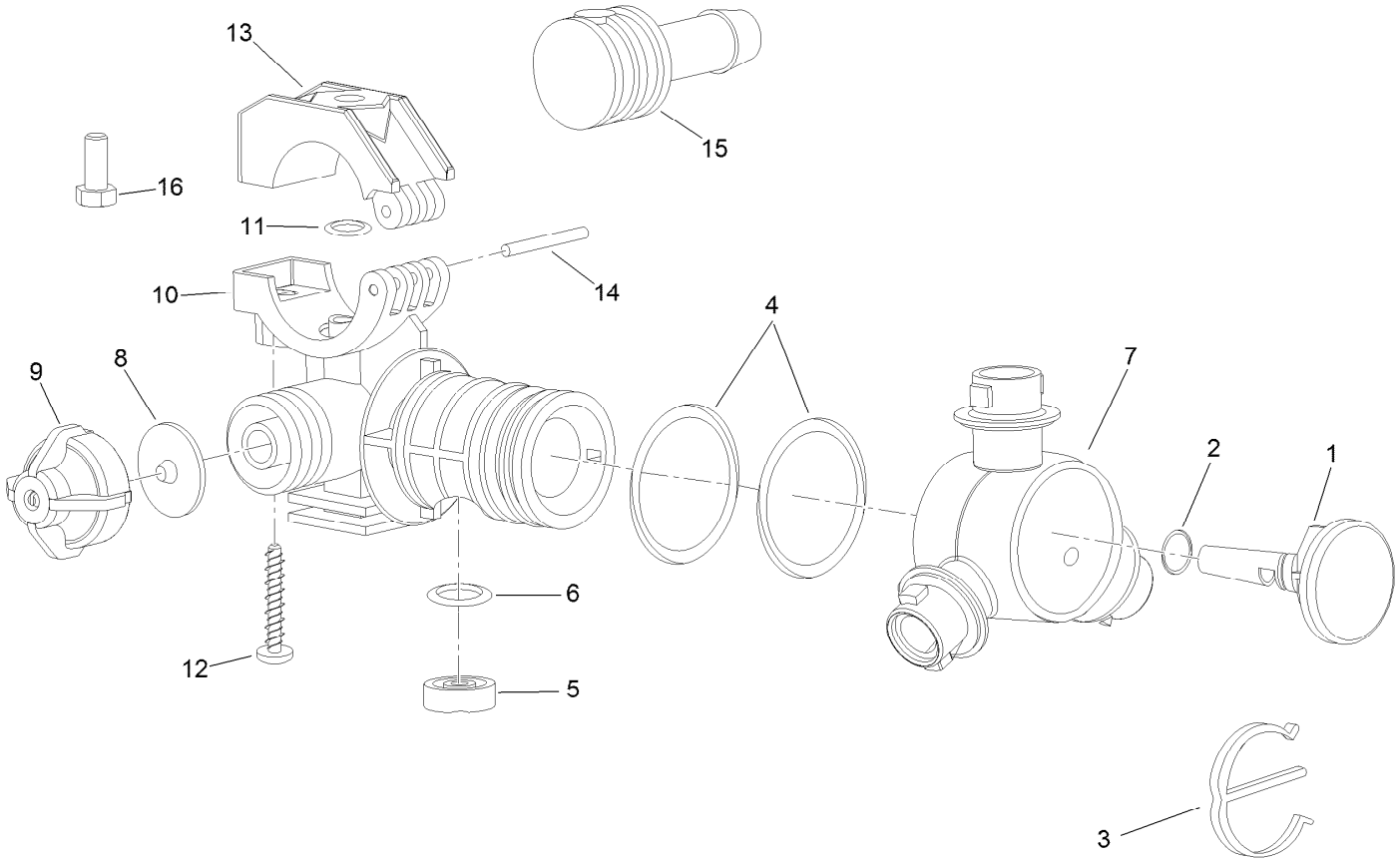

LH Single Turret Body Assembly No. 108-3725

Ref.	Part Number	Qty.	Description
1	95-9200	1	Plug
2	95-9198	1	O-Ring
3	95-9197	1	E-Clip
4	95-9199	2	O-Ring
5	108-3264	1	Seal-Viton
6	108-3265	1	O-Ring-Viton
7	95-9196	1	Turret
8	41003	1	Diaphragm

Ref.	Part Number	Qty.	Description
9	95-9193	1	Cap-Diaphram
10	95-9192	1	Body-Split Eyelet
11	95-9191	1	O-Ring
12	99-0811	1	Screw-Clamp
13	99-0812	1	Clamp-Upper
14	99-0814	1	Pin-Pivot
15	95-9201	1	Shank-Hose
16	322-3	1	Screw-HH

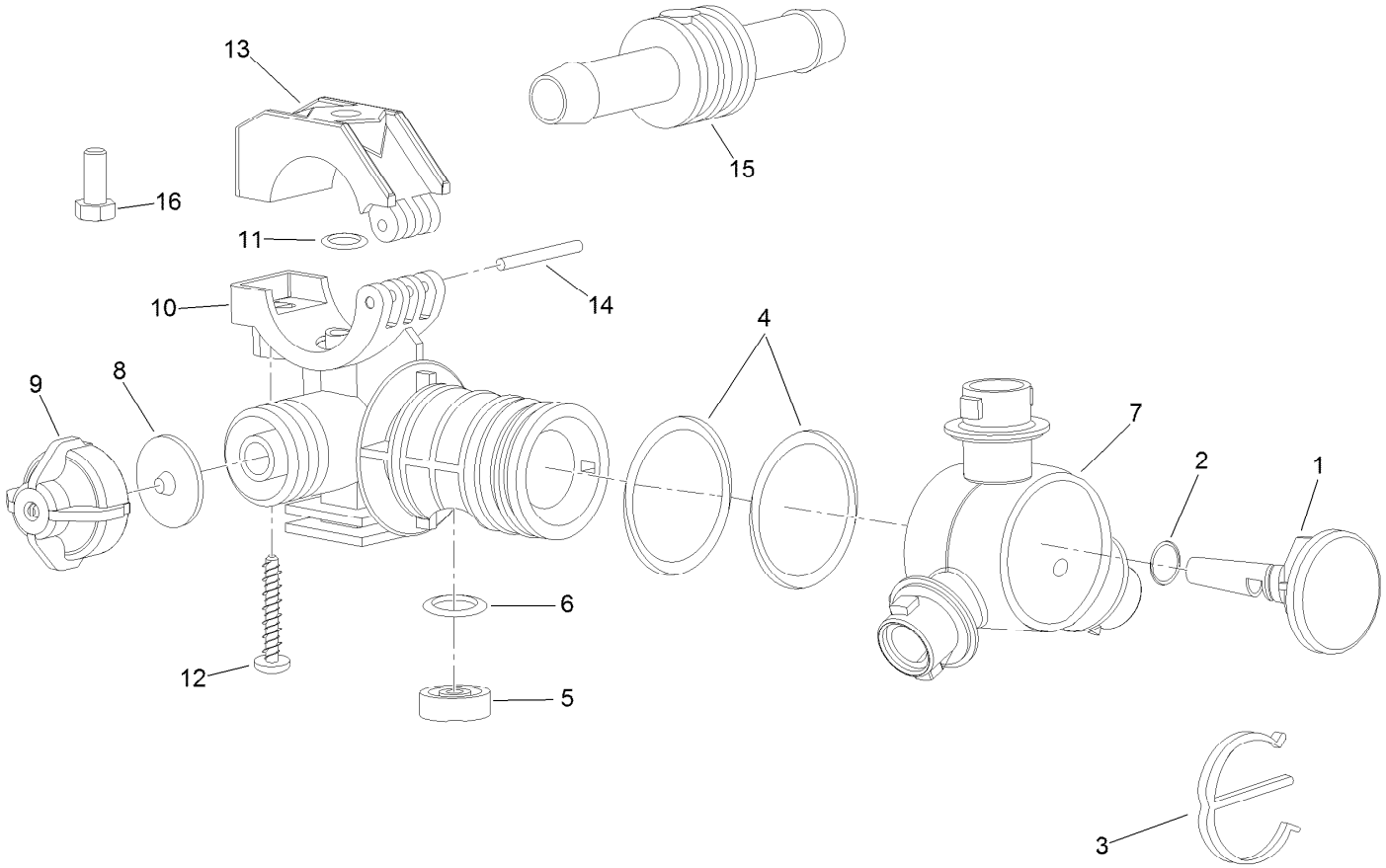

Double Turret Body Assembly No. 108-3727

Ref.	Part Number	Qty.	Description
1	95-9200	1	Plug
2	95-9198	1	O-Ring
3	95-9197	1	E-Clip
4	95-9199	2	O-Ring
5	108-3264	1	Seal-Viton
6	108-3265	1	O-Ring-Viton
7	95-9196	1	Turret
8	41003	1	Diaphragm

Ref.	Part Number	Qty.	Description
9	95-9193	1	Cap-Diaphram
10	95-9192	1	Body-Split Eyelet
11	95-9191	1	O-Ring
12	99-0811	1	Screw-Clamp
13	99-0812	1	Clamp-Upper
14	99-0814	1	Pin-Pivot
15	95-9202	1	Shank-Hose
16	322-3	1	Screw-HH

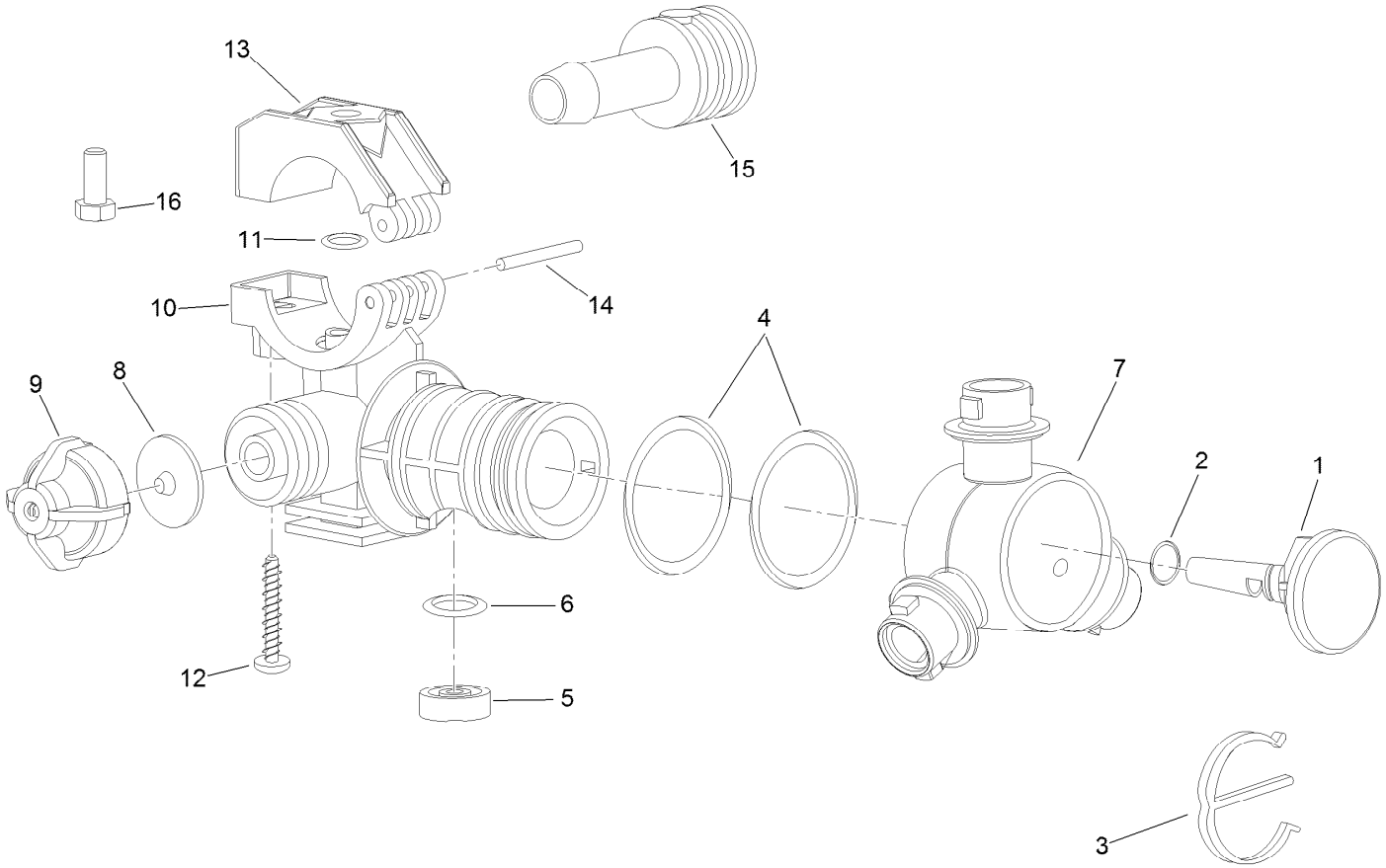

RH Single Body Turret Assembly No. 108-3726

Ref.	Part Number	Qty.	Description
1	95-9200	1	Plug
2	95-9198	1	O-Ring
3	95-9197	1	E-Clip
4	95-9199	2	O-Ring
5	108-3264	1	Seal-Viton
6	108-3265	1	O-Ring-Viton
7	95-9196	1	Turret
8	41003	1	Diaphragm
9	95-9193	1	Cap-Diaphram
10	95-9192	1	Body-Split Eyelet
11	95-9191	1	O-Ring
12	99-0811	1	Screw-Clamp
13	99-0812	1	Clamp-Upper
14	99-0814	1	Pin-Pivot
15	95-9201	1	Shank-Hose
16	322-3	1	Screw-HH

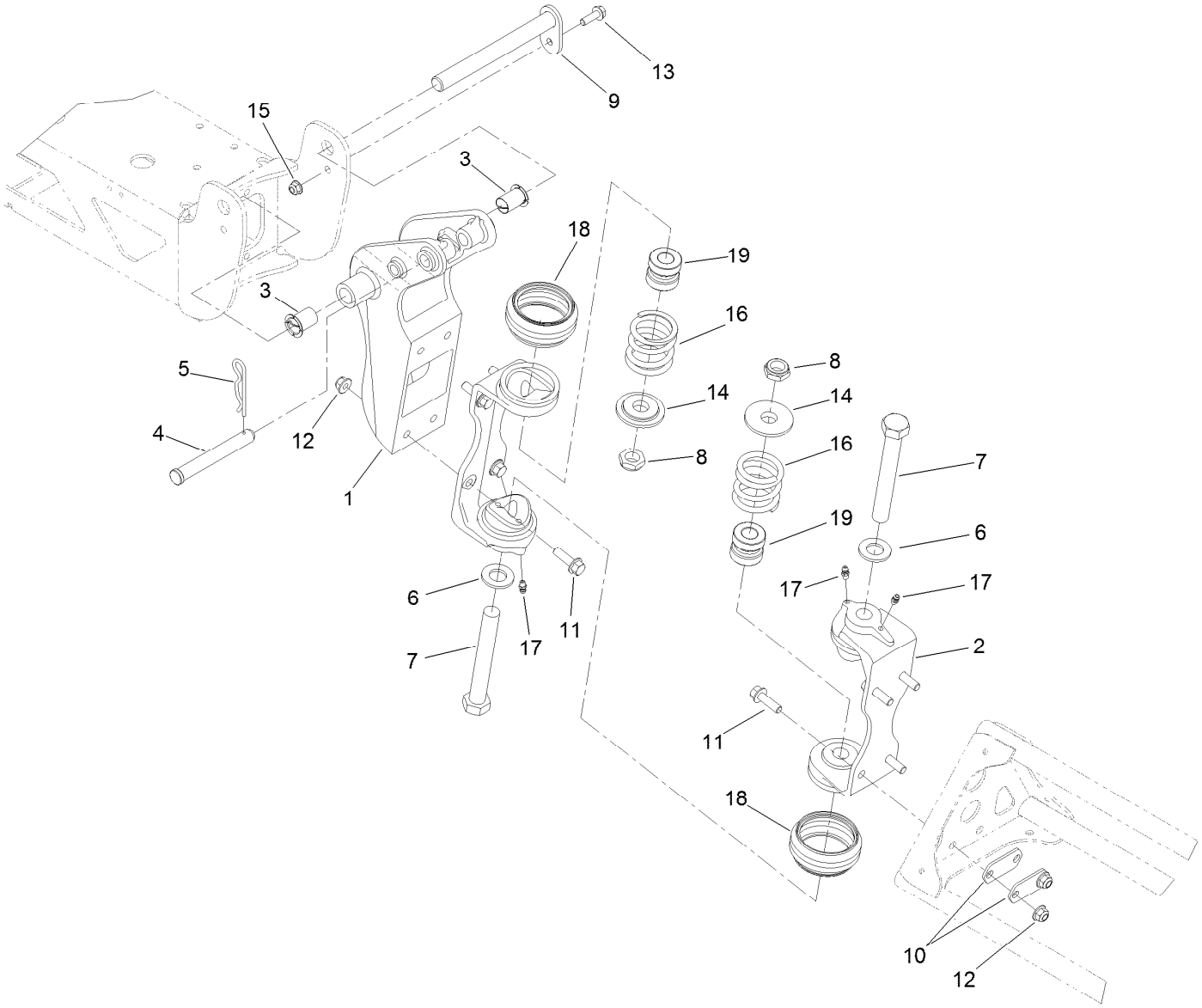

Boom Mounting Assembly

Ref.	Part Number	Qty.	Description
1	119-4993-03	2	Bracket-Pivot
2	108-3471-03	4	Hinge
3	100-8541	4	Bushing-A Arm
4	108-3436	2	Pin-Clevis
5	3290-468	2	Pin-Cotter
6	110-5054	4	Washer-Flat
7	108-3738	4	Screw-HH
8	3296-15	4	Nut-Lock, NI
9	108-3419	2	Pivot Pin ASM
10	108-3605	8	Plate-Backing

Ref.	Part Number	Qty.	Description
11	110-5050	16	Screw-HHF
12	104-8301	16	Nut-HF, NI
13	108-3748	2	Screw-HHF
14	108-3444	4	Retainer-Spring
15	104-8300	2	Nut-HF, NI
16	108-3440	4	Spring-Breakaway, Boom
17	302-5	8	Fitting-Grease
18	108-3459	4	Boot-Hinge
19	120-8541	4	Dampener-Hinge

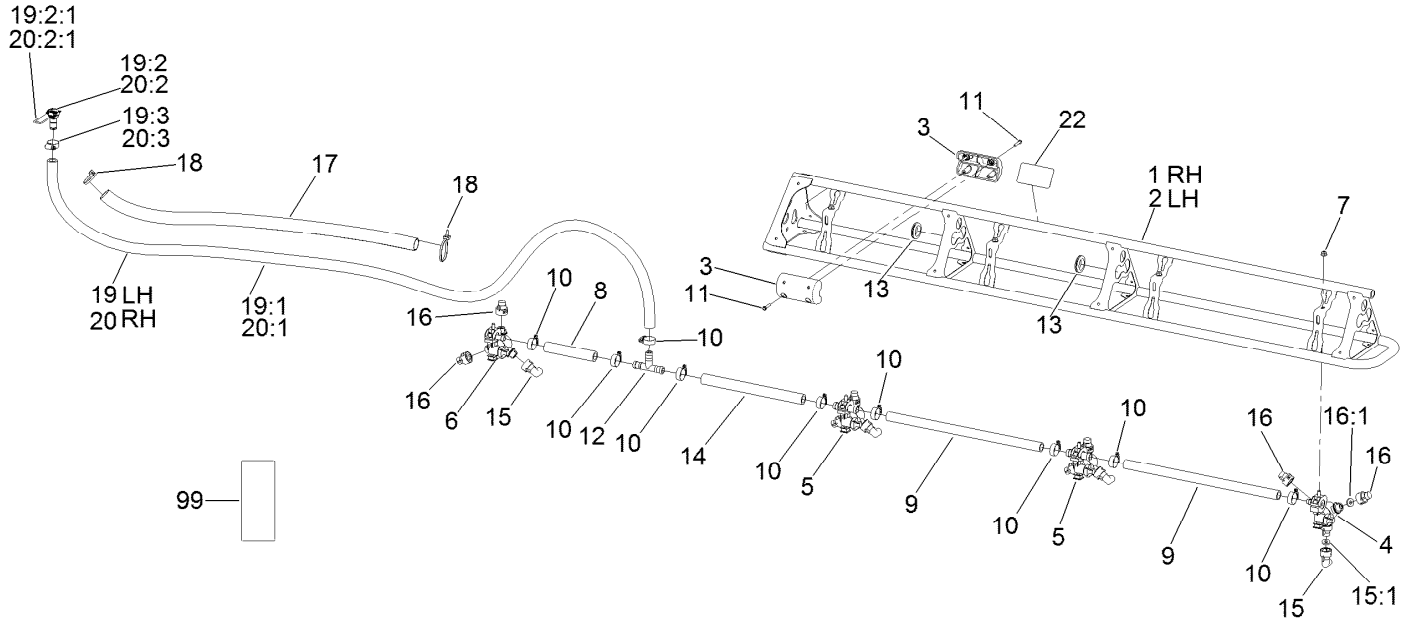

Left and Right Hand Boom Assembly

Ref.	Part Number	Qty.	Description
1	108-3524-03	1	Boom-RH
2	108-3525-03	1	Boom-LH
3	119-9368	4	Block Slide
4	108-3725	2	LH Single Body Turret ASM
5	108-3727	4	Double Turret Body ASM
6	108-3726	2	RH Single Body Turret ASM
7	104-8300	8	Nut-HF, NI
8	108-3728	2	Hose-Boom
9	40506	4	Hose-Jumper
10	2412-129	18	Clamp-Hose
11	119-9369	8	Screw-HHF
12	108-3439	2	Tee
13	240-3	4	Grommet-Rubber
14	108-3721	2	Hose-Boom
15	95-9186	8	Cap
15:1	40998	1	Seat-Gasket

Ref.	Part Number	Qty.	Description
16	95-9187	16	Cap-Blank
16:1	40998	1	Seat-Gasket
17	107-8650	2	Conduit-Convoluted
18	3290-378	6	Tie-Cable
19	132-4334	1	Hose-Left Boom
19:1	131-3790	1	Hose-Boom, RH
19:2	127-9807	1	Straight Fitting Kit
19:2:1	127-1175	1	Fork
19:3	2412-129	1	Clamp-Hose
20	132-4336	1	Hose-Boom, ASM
20:1	127-9769	1	Hose-Supply
20:2	127-9807	1	Straight Fitting Kit
20:2:1	127-1175	1	Fork
20:3	2412-129	1	Clamp-Hose
22	104-8904	2	Decal-Grasp Boom Here
99	119-9434	1	Decal-Magnetic

Attachments and Accessories

For 41240 Multi Pro WM Turf Sprayer

Product Name	Model/Part
Premium ATF (Drum)	108-1185
Premium ATF (Pail)	108-1186
Premium All Purpose Grease (Tube)	108-1190
License Plate Kit	120-8506
Covered Boom Spring Upgrade Kit	120-8508
Premium Engine Oil 10w30 (55 Gallon Drum)	121-6392
Premium Engine Oil 10w30 (5 Gallon Pail)	121-6393
Fan Kit (EFI, Gas Engine Only)	127-9719
Lance Suction Assembly	127-9826
Sonic Boom Finish Kit	130-8228
Multi Pro WM Turf Sprayer Finishing Kit (Automatic)	131-3301
Multi Pro WM Turf Sprayer Finishing Kit (Manual)	131-3302
Foam Marker Finishing Kit	136-0459
Single Nozzle Kit	41023
Hand Spray Wand Kit	41118
Pro Foam Concentrate (4 x 1 Gallon)	41157
EU Compliance Kit	41200
Rear Work Light Kit	41206
Jackstand Kit	41216
Ultra Sonic Boom Leveling Kit	41219
Foam Marker Kit	41232
Tank Clean Rinse Kit	41241
Chemical Pre-Mix Kit	41244
Electric Hose Reel Kit	41245
Foam Marker Kit	41249
Drift Reduction Boom Shroud Kit	41602
Pro-Foam	41607

Notes:

TORO®

Count on it.