FORM NO. 3312-215

TORO®

MODEL NO. 58070-3000001 & UP

PARTS CATALOG

TORO® 5 HP CHAIN DRIVE TILLER

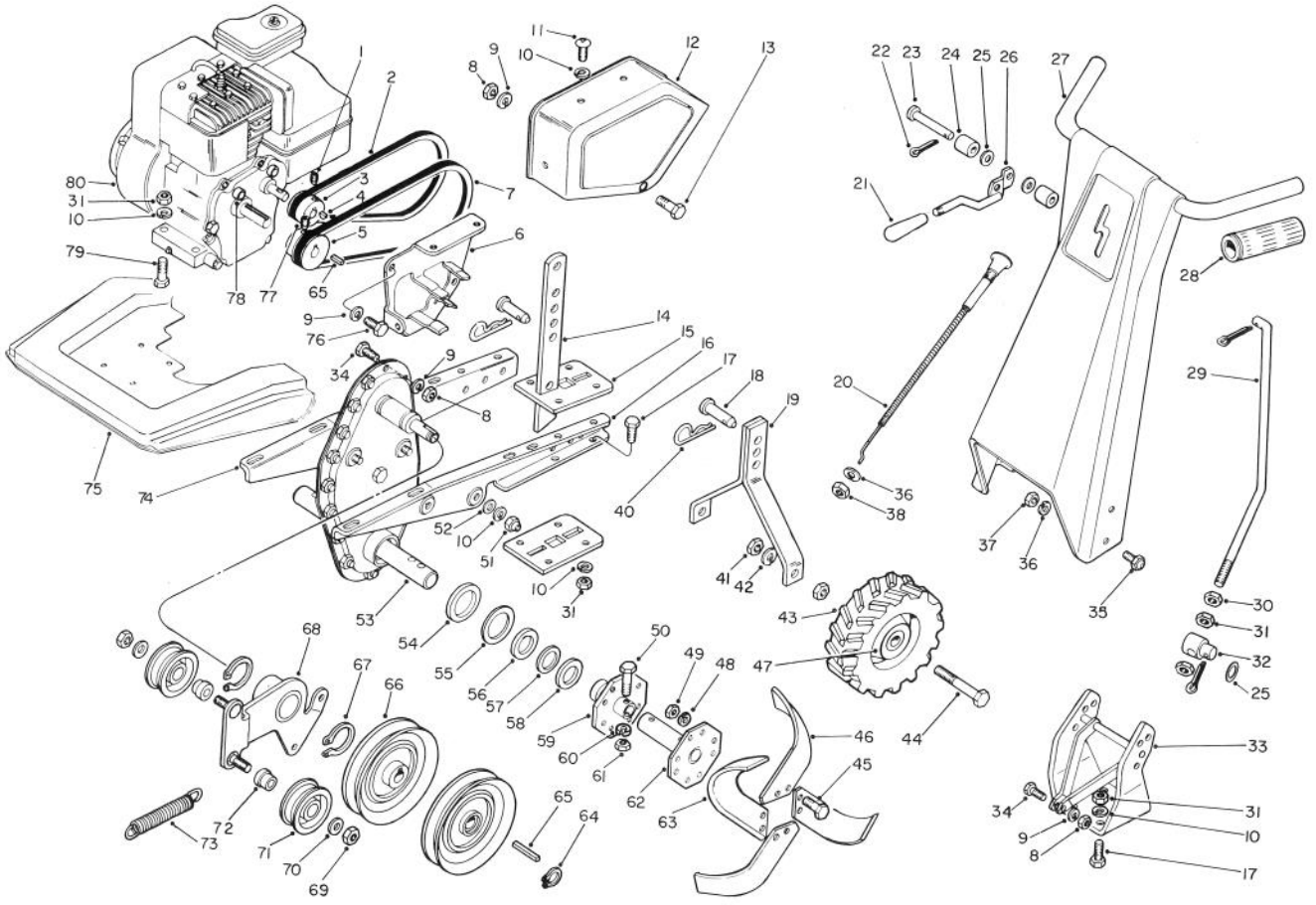

TILLER ASSEMBLY

Ref. No.	Part No.	Description	No. Used
1	3245-7	Set Screw	2
2	48-0090	V-Belt — Reverse	1
3	47-8990	Pulley — Camshaft	1
4	3257-24	Woodruff Key	1
5	48-1110	Pulley — Engine	1
6	48-0270	Bracket	1
7	47-9540	V-Belt — Forward	1
8	3217-5	Hex Nut	3
9	3253-3	Lockwasher	6
10	3253-4	Lockwasher	23
11	47-8800	Pan Hd. Mach. Screw	3
12	48-1020	Belt Guard w/Decal	1
13	321-3	Capscrew	1
14	47-7990	Depth Control	1
15	47-9730	Plate — Hitch	2
16	47-9720	Frame — L.H.	1
17	322-3	Capscrew	12
18	47-8040	Clevis Pin	2

Ref. No.	Part No.	Description	No. Used
19	47-8520	Wheel Hanger	1
20	48-0850	Throttle Control	1
21	47-8140	Knob	1
22	3272-6	Cotter Pin	3
23	47-8220	Clevis Pin	1
24	47-8210	Rubber Disc	2
25	3256-23	Flat Washer	3
26	48-1040	Clutch Lever	1
27	48-1070	Handle w/Decal	1
28	48-1130	Grip	2
29	48-1030	Control Rod	1
30	3218-2	Jam Nut	1
31	3217-6	Hex Nut	18
32	48-0130	Swivel	1
33	48-1050	Handle Support	1
34	321-4	Capscrew	2
35	47-7800	Acorn Hd. Bolt	4
36	3253-5	Lockwasher	5

COPYRIGHT © ALL RIGHTS RESERVED

The Toro Company — 1983
MINNEAPOLIS, MN 55420 — U.S.A.

PRICE $1.00

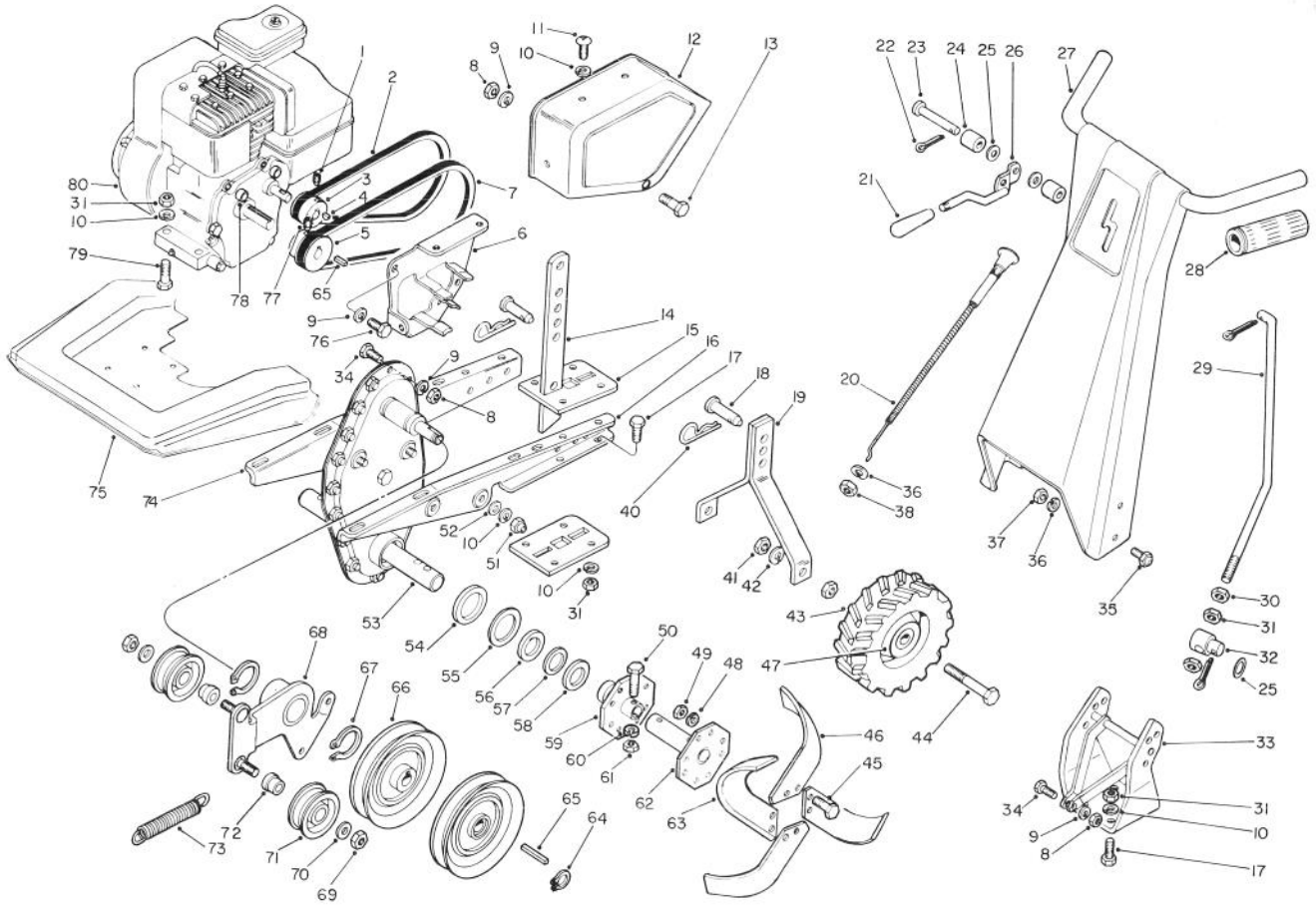

TILLER ASSEMBLY (Continued)

Ref. No.	Part No.	Description	No. Used
37	3217-7	Hex Nut	4
38	3219-3	Hex Nut	1
40	47-7790	Hair Pin Cotter	2
41	3218-5	Jam Nut	4
42	3253-7	Lockwasher	2
43	47-8010	Tire & Wheel Assembly L.H.	1
44	325-14	Capscrew	2
45	47-7980	Tine Bolt	32
46	47-7910	Tine R.H.	8
47	47-8000	Tire & Wheel Assembly R.H.	1
48	3253-6	Lockwasher	32
49	3219-4	Hex Nut	32
50	47-8860	Capscrew	4
51	32152-1	Nut — Hex Cone Lock	4
52	3256-23	Flat Washer	4
53	48-1260	Chain Case Assembly	1
54	47-9670	Washer	2
55	47-7780	Felt Seal	2
56	47-8100	Felt Seal	2
57	47-8050	Washer	2
58	47-8060	Felt Seal	2
59	47-8080	Inner Tine Hub	2

Ref. No.	Part No.	Description	No. Used
60	3253-21	Lockwasher	4
61	3219-3	Hex Nut	4
62	47-8070	Outer Tine Hub	2
63	47-7920	Tine L.H.	8
64	47-9580	Retaining Ring	1
65	3-6857	Key	2
66	48-0100	Pulley	2
67	32120-33	Retaining Ring	2
68	48-0110	Idler Arm	1
69	32152-2	Locknut	2
70	3256-24	Flatwasher	2
71	47-9520	Idler Pulley	2
72	47-9530	Spacer	2
73	48-0120	Spring	1
74	47-9710	Frame R.H.	1
75	48-0980	Tine Shield	1
76	321-10	Capscrew	3
77	3246-2	Set Screw	1
78	47-7860	Spacer	3
79	322-7	Capscrew	4
80	47-7700	Engine	1

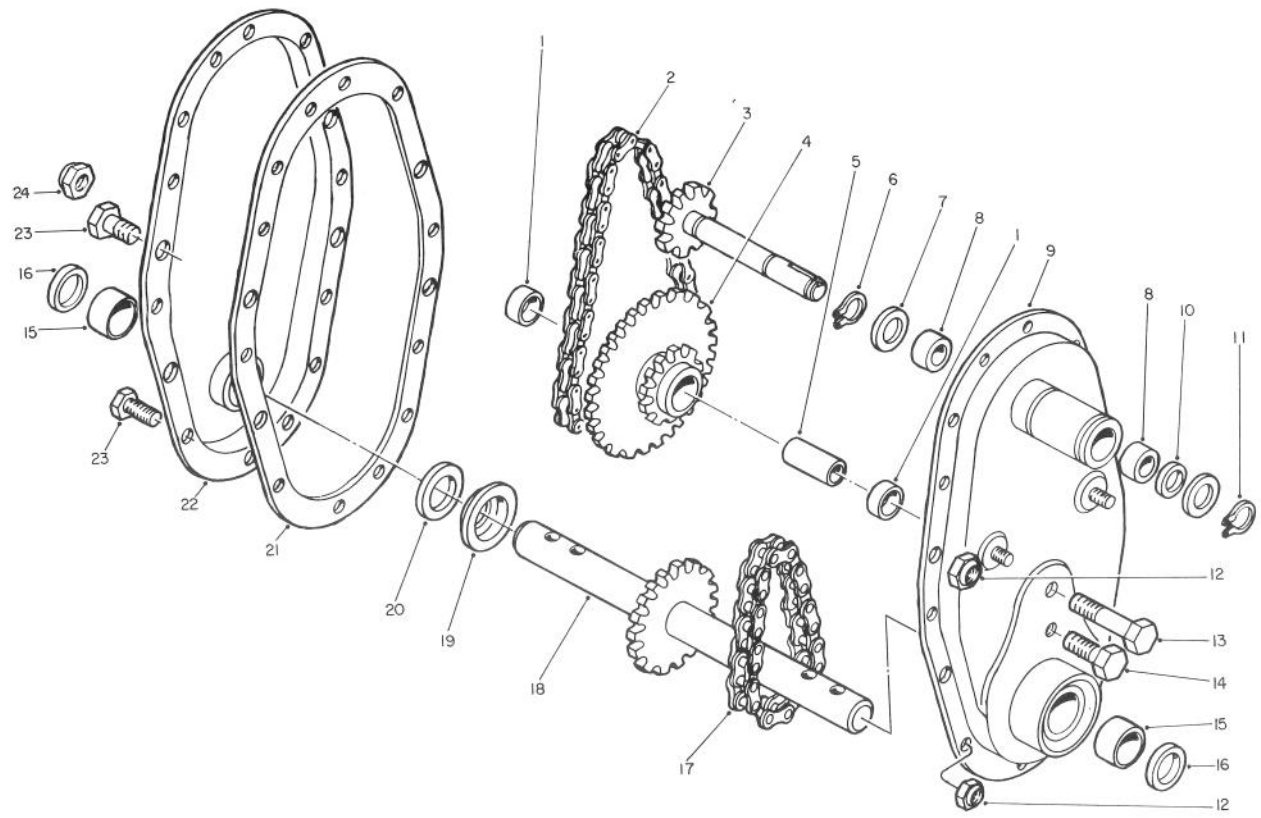

CHAIN CASE ASSEMBLY NO. 48-1260

Ref. No.	Part No.	Description	No. Used
1	47-8350	Bearing	2
2	47-9690	Upper Chain	1
3	48-0280	Input Shaft	1
4	47-9700	Sprocket Assembly (Incl. Ref. #1)	1
5	47-7960	Idler Sleeve	1
6	47-9580	Retaining Ring	2
7	47-9650	Washer	2
8	252-82	Bearing	2
9	48-0330	Chain Case Assembly L.H. (Incl. Ref. # 8&15)	1
10	47-9610	Seal	1
11	47-9580	Retaining Ring	2
12	32152-4	Locknut	14

Ref. No.	Part No.	Description	No. Used
13	47-8900	Capscrew	1
14	3213-20	Capscrew	1
15	47-9550	Bearing	2
16	47-7770	Seal	2
17	47-9560	Lower Chain	1
18	48-1280	Tine Shaft	1
19	47-9640	Spacer Cup	1
20	47-8780	Shim — Gear	1-2
21	47-9570	Gasket	1
22	48-0320	Chain Case Assembly R.H.. (Incl. Ref. #15)	1
23	321-2	Capscrew	14
24	32152-2	Locknut	1

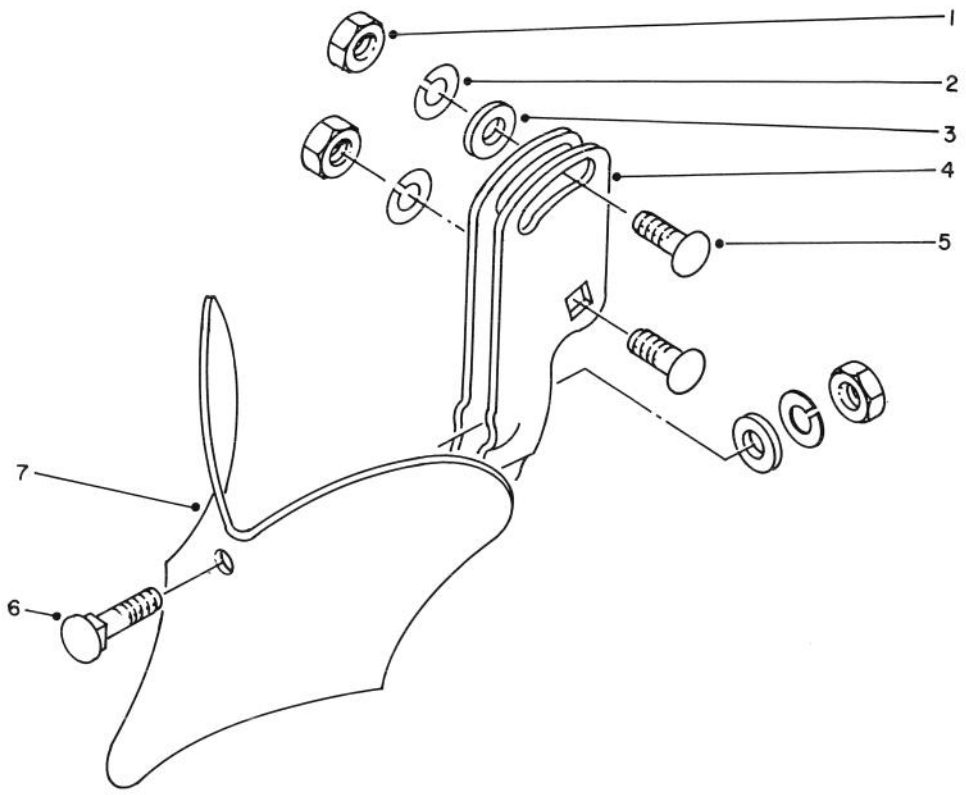

8" FURROW OPENER MODEL 59708 (Optional)

Ref. No.	Part No.	Description	No. Used
1	3217-7	Hex Nut	3
2	3253-5	Lockwasher	3
3	3256-24	Washer	2
4	49-3390	Holder	1

Ref. No.	Part No.	Description	No. Used
5	3231-25	Carriage Bolt	2
6	49-3410	Plow Bolt	1
7	49-3400	Shovel	1

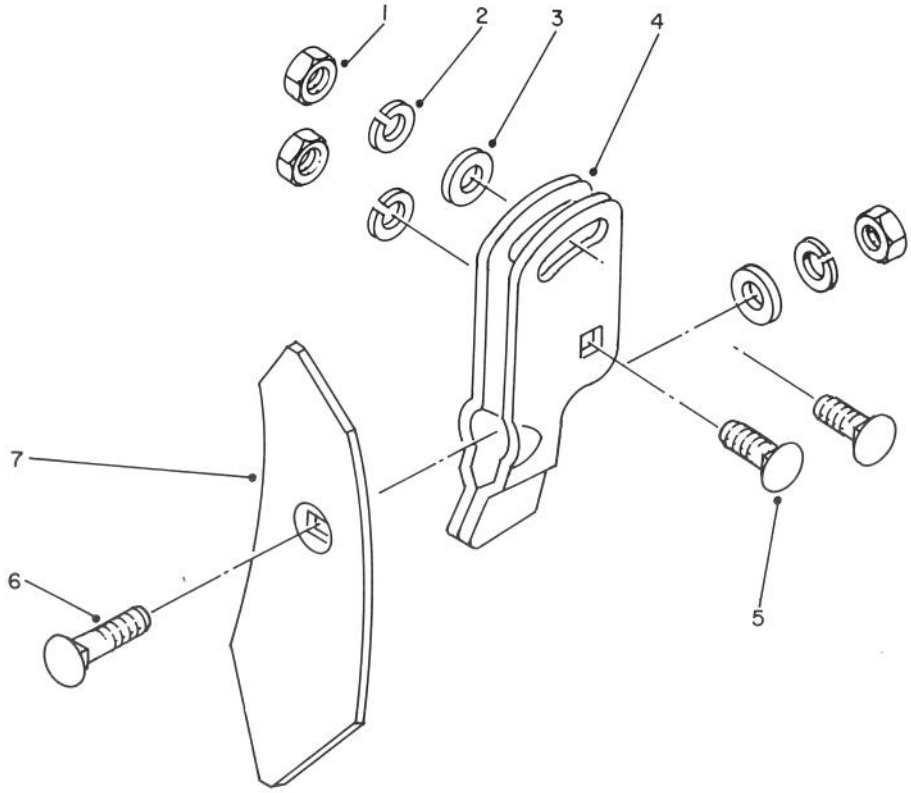

2" FURROW OPENER MODEL 59709 (Optional)

Ref. No.	Part No.	Description	No. Used
1	3217-7	Hex Nut	3
2	3253-5	Lockwasher	3
3	3256-24	Washer	2
4	49-3390	Holder	1

Ref. No.	Part No.	Description	No. Used
5	3231-25	Carriage Bolt	2
6	49-3410	Plow Bolt	1
7	49-3420	Shovel	1

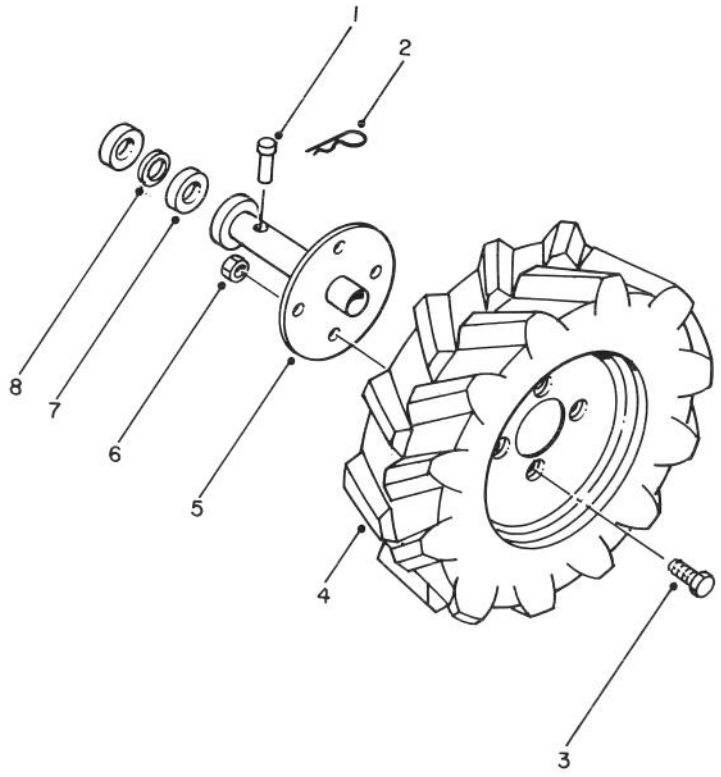

16″ TRACTOR TIRES MODEL 59716 (Optional)

Ref. No.	Part No.	Description	No. Used
1	49-3590	Clevis Pin	2
2	47-7790	Hair Pin Cotter	2
3	49-3600	Lug Bolt	8
4	49-3570	Tire and Wheel Assembly L.H.	1
*	49-3540	Tire and Wheel Assembly R.H.	1
*	49-3550	Tire — 16" Tubeless	2
*	47-8090	Value Stem	2

Ref. No.	Part No.	Description	No. Used
*	49-3560	Wheel	2
*	47-7930	Valve Cap	2
5	49-3580	Adapter	2
6	3219-4	Hex Nut	8
7	49-3610	Felt Seal	4
8	47-8050	Washer	2

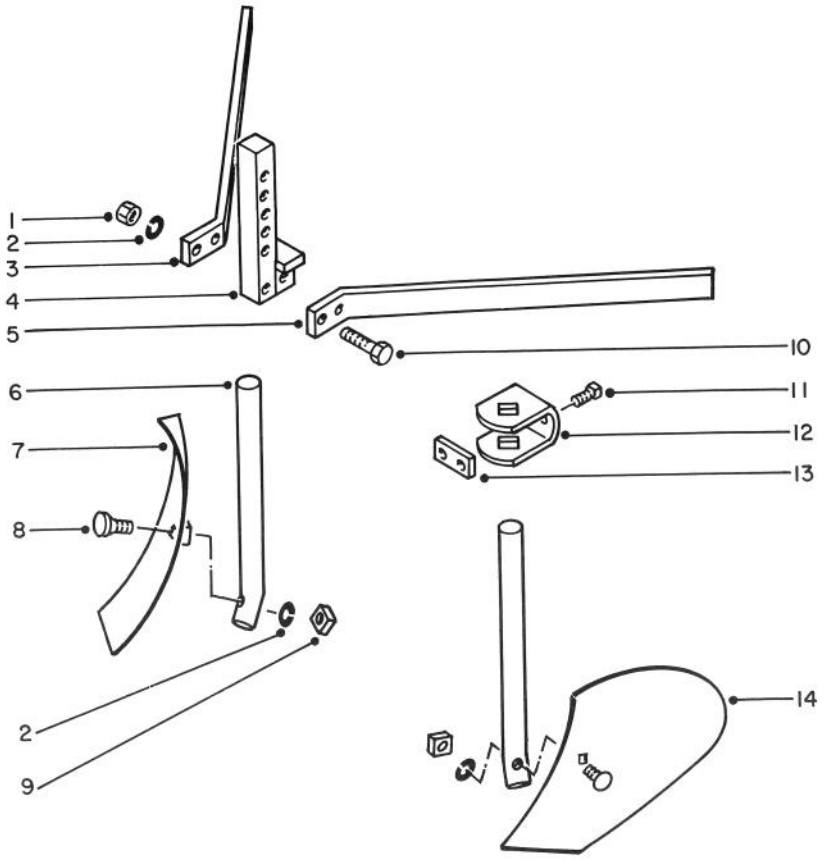

TURNING PLOW MODEL 59718 (Optional)

Ref. No.	Part No.	Description	No. Used
1	3219-3	Hex Nut	2
2	3253-5	Lockwasher	2
3	49-3470	Hitch Side — A Frame	2
4	49-3460	Hitch	1
5	49-3450	Attachment Standard	2
6	49-3350	Turning Plow — R.H.	1
7	49-3480	Plow Bolt	2

Ref. No.	Part No.	Description	No. Used
8	49-3490	Square Nut	2
9	3211-11	Hex Hd. Capscrew	2
10	49-3510	Square Hd. Set Screw	4
11	49-3440	Clamp	2
12	49-3500	Special Nut	2
13	49-3360	Turning Plow — L.H.	1

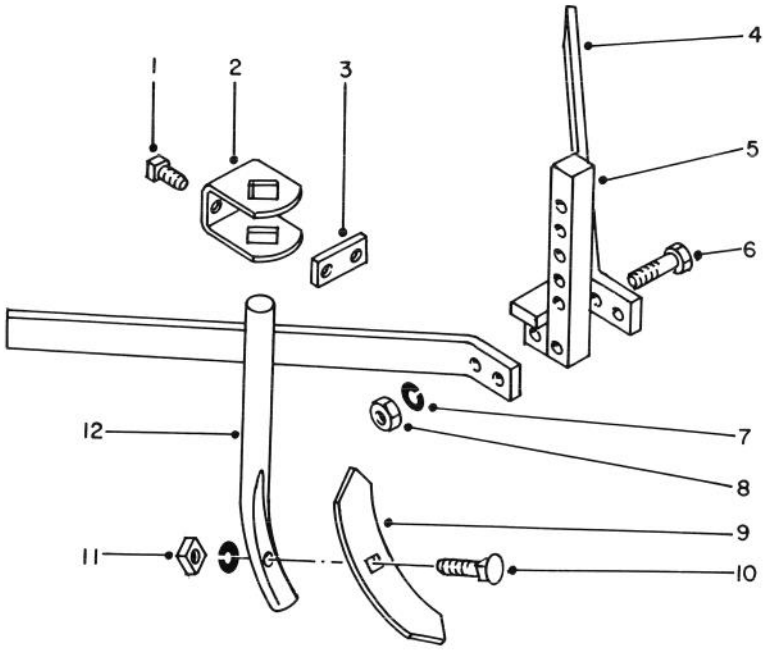

WISHBONE HARROW MODEL 59719 (Optional)

Ref. No.	Part No.	Description	No. Used
1	49-3510	Set Screw	8
2	49-3440	Clamp	4
3	49-3500	Special Nut	4
4	49-3470	Hitch Side — A Frame	2
5	49-3460	Hitch	1
6	3211-11	Hex Hd. Capscrew	2

Ref. No.	Part No.	Description	No. Used
7	3253-5	Lockwasher	6
8	3219-3	Hex Nut	2
9	49-3430	Wishbone Harrow Point	4
10	49-3480	Plow Bolt	4
11	49-3490	Square Nut	4
12	49-3450	Attachment Standard	4

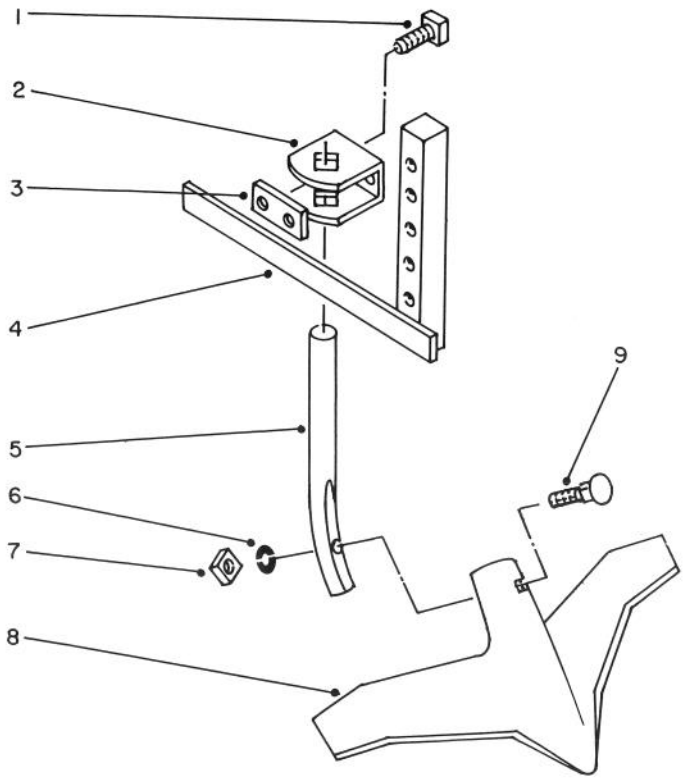

15" SWEEP PLOW MODEL 59729 (Optional)

Ref. No.	Part No.	Description	No. Used
1	49-3510	Square Hd. Set Screw	2
2	49-3440	Clamp	1
3	49-3500	Special Nut	1
4	49-3530	Hitch	1
5	49-3450	Attachment Standard	1

Ref. No.	Part No.	Description	No. Used
6	3253-5	Lockwasher	1
7	49-3490	Square Nut	1
8	49-3520	15" Sweep	1
9	49-3480	Plow Bolt	1

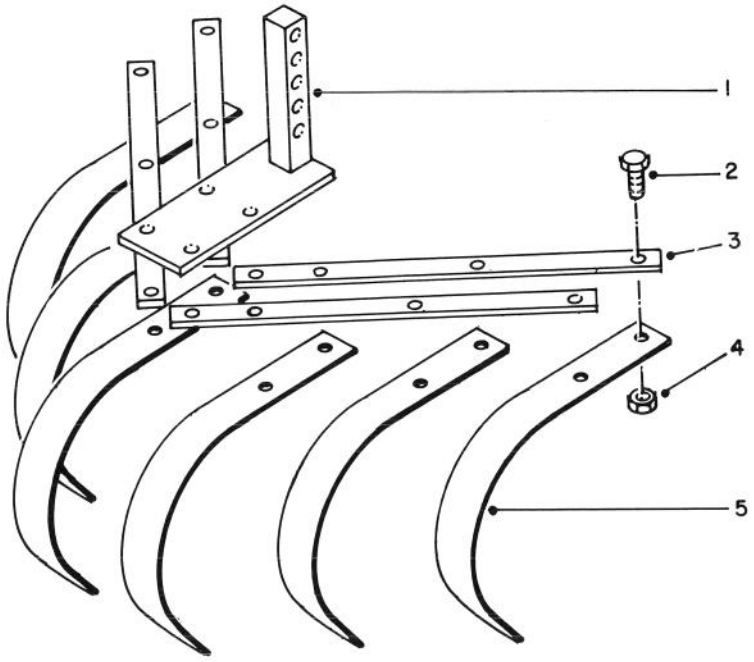

SPRING TOOTH CULTIVATOR MODEL 59722 (Optional)

Ref. No.	Part No.	Description	No. Used
1	49-3790	Hitch	1
2	322-5	Hex Hd. Capscrew	16
3	49-3800	Attachment Bar	4

Ref. No.	Part No.	Description	No. Used
4	32152-1	Locknut	16
5	49-3810	Spring Tooth	6

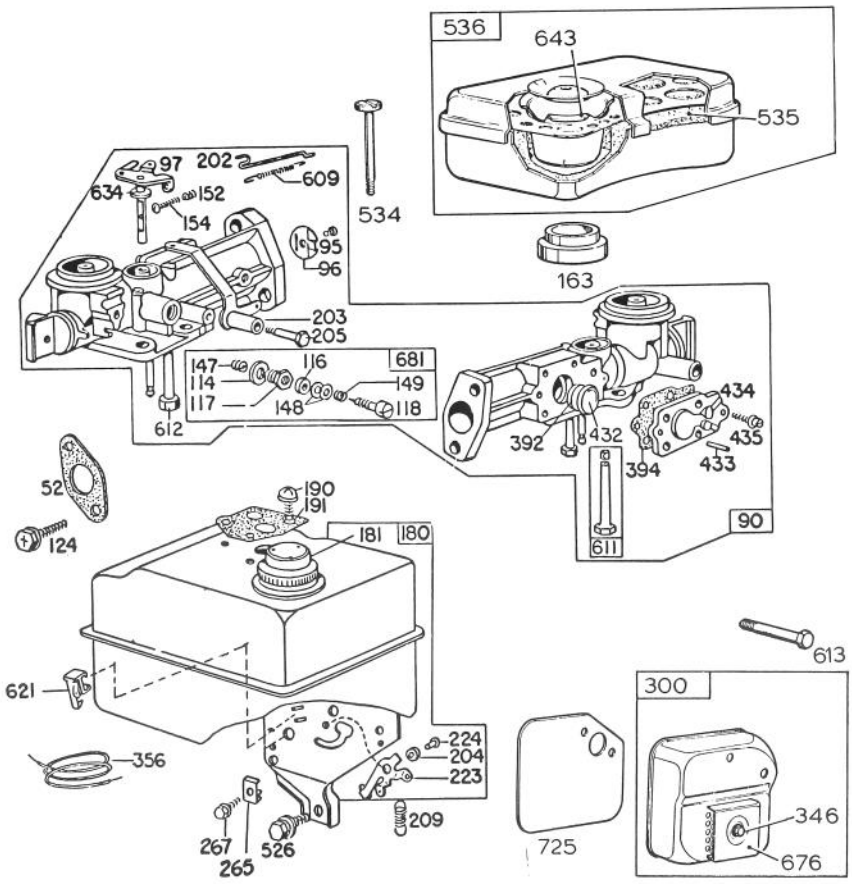

ENGINE BRIGGS & STRATTON MODEL 130292-1671-02 (Continued)

Ref. No.	Part No.	Description	No. Used
52	*27355	Gasket — Carburetor Mounting	2
90	299437	Carburetor Assembly	1
95	93499	Screw — Throttle Valve to Shaft Sem	1
96	211203	Throttle — Carburetor	1
97	299212	Shaft and Lever — Throttle	1
114	66594	Gasket — Needle Valve Nut	1
116	65978	Packing — Needle Valve	1
117	230590	Nut — Needle Valve	1
118	23433	Valve — Needle	1
124	93357	Screw — Hex. Head	1
147	230591	Seat — Needle Valve	1
148	22235	Washer — Needle Valve	2
149	26336	Spring — Needle Valve	1
152	260575	Spring — Throttle Adjustment	1
154	93527	Screw — Machine, Rd. Hd. — 5-40 x 5/8"	1
163	27660	Gasket — Air Cleaner Mounting	1
180	297600	Tank Assembly — Fuel	1
181	392304	Cap — Fuel Tank	1
190	93440	Screw — Fuel Tank Mounting Sem	1
191	*27911	Gasket — Fuel Tank Mounting	2
202	260678	Link — Throttle	1
203	393919	Crank — Bell	1
204	222962	Bushing Governor Lever (Flat)	1
205	93838	Screw — Shoulder	1
209	260695	Spring — Governor	1

Ref. No.	Part No.	Description	No. Used
223	221517	Lever — Governor Control	1
224	93491	Rivet — Governor Control Lever Mounting	1
265	221535	Clamp — Casing	1
267	93496	Screw — Sem	1
300	297274	Muffler — Exhaust	1
346	93705	Screw — Sem	1
356	299500	Wire — Ground	1
392	260455	Spring — Fuel Pump Diaphragm	1
394	270026	Diaphragm	1
432	221377	Cap — Spring	1
433	93265	Pin — Diaphragm Cover	1
434	210959	Cover — Diaphragm	1
435	93141	Screw — Diaphragm Cover	1
526	93343	Screw — Tank Bracket Mounting Sem	1
534	93322	Screw — Air Cleaner	1
535	27987	Element — Air Cleaner	1
536	297036	Cleaner Assembly — Air	1
609	260694	Spring — Throttle Link	1
611	391813	Fuel Pipe and Clip Assembly	1
612	296811	Pipe — Fuel	1
613	93377	Screw — Hex. Hd.	1
621	297472	Switch — Stop	1
634	270167	Washer, Throttle Shaft (Felt)	1
643	280374	Cup — Air Cleaner	1
676	393750	Deflector — Exhaust	1
681	299060	Needle Valve Kit	1
725	221885	Shield — Heat	1

ENGINE BRIGGS & STRATTON MODEL 130292-1671-02 (Continued)

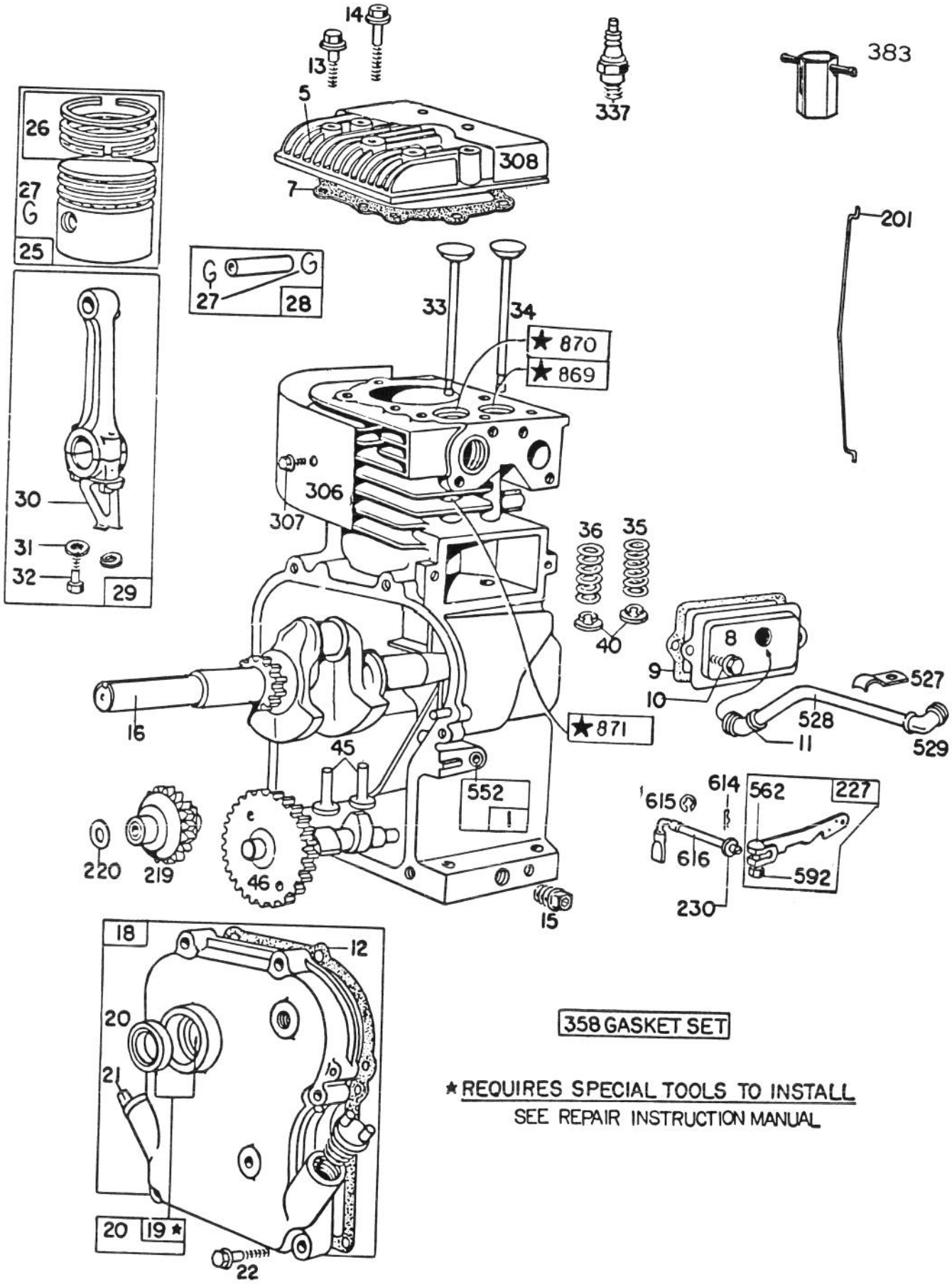

ENGINE BRIGGS & STRATTON MODEL 130292-1671-02 (Continued)

Ref. No.	Part No.	Description	No. Used
1	395990	Cylinder Assembly	1
5	211542	Head — Cylinder	1
7	*270383	Gasket — Cylinder Head	1
8	294178	Breather — Valve Chamber	1
9	*27549	Gasket — Valve Cover	1
10	93394	Screw — Breather Mtg. Sem	1
11	66578	Grommet — Breather Tube	1
12	*270080	Gasket — Crankcase — .015" thick (Standard)	1
	*270125	Gasket — Crankcase — .005" thick	1
	*270126	Gasket — Crankcase — .009" thick	1
13	93368	Screw — Cylinder Head (2-3/32" long)	1
14	93369	Screw — Cylinder Head (2-15/32" long)	1
15	93448	Plug — Pipe	1
16	260938	Crankshaft	1
18	298183	Cover Assy. — Crankcase	1
19	297603	Bushing — Crankcase Cover	1
		Note: Requires special tools for installation.	1
20	294606	Seal — Oil	
		Note: 391484 Seal — Oil Used on the Auxiliary P.T.O. Shaft	1
21	66768	Plug — Oil Filler	1
22	93032	Screw — Crankcase Cover Mounting Sem	1
25	298904	Piston Assy. Standard	1
	298905	Piston Assy.— .010" O.S.	1
	298906	Piston Assy.— .020" O.S.	1
	298907	Piston Assy. — .030" O.S.	1
		Piston Ring Sets:	
		Note: For Chrome Piston Ring Set — Standard Size — Order Part No. 299742.	1
26	298982	Ring Set — Standard Piston	1
	298983	Ring Set — .010" O.S. Piston	1
	298984	Ring Set — .020" O.S. Piston	1
	298985	Ring Set — .030" O.S. Piston	1
27	26026	Lock — Piston Pin	1
28	298909	Pin Assy. — Piston — Standard	1
	298908	Pin Assy. — Piston — .005" O.S.	1

Ref. No.	Part No.	Description	No. Used
29	299430	Rod Assy. — Connecting	
		Note: For Connecting Rod with .020" undersize Crankpin Bore — Order No. 390459	1
30	221890	Dipper — Connecting Rod	1
31	222282	Washer (One for each screw)	1
32	92296	Screw — Connecting Rod	1
33	211119	Valve — Exhaust	1
34	261044	Valve — Intake	1
35	260552	Spring — Intake Valve	1
36	26478	Spring — Exhaust Valve	1
40	93312	Retainer — Valve Spring	1
45	260642	Tappet — Valve	1
46	211284	Gear — Cam	1
201	261558	Link — Governor	1
219	391737	Gear — Governor	1
220	221551	Washer — Thrust	1
227	393920	Lever Assy. — Governor	1
230	222450	Washer — Governor Lever (1/4" I.D.)	1
306	221511	Shield — Cylinder	1
307	93042	Screw — Cylinder Shield Mounting Sem	1
308	221512	Cover — Cylinder Head	1
337	298809	Plug — Spark (1-1/2" high — 37-42 M.M.)	1
358	297615	Gasket Set	1
383	89838	Wrench — Spark Plug	1
527	221514	Clamp — Breather Tube	
528	230722	Tube — Breather	1
529	67838	Grommet — Breather Tube	1
552	231079	Bushing — Governor Crank (1/4" I.D.)	1
562	92613	Bolt — Governor Lever	1
592	231082	Nut — Hex. — 10-24	1
614	93306	Cotter — Hair Pin	1
615	93307	Retainer — E-Ring	1
616	231077	Crank — Governor	1
869	211787	Seat — Intake Valve (Standard)	1
870	211172	Seat — Exhaust Valve (Standard)	1
871	63709	Guide — Exhaust Valve	1

*Included in Gasket Set — Part No. 297615.

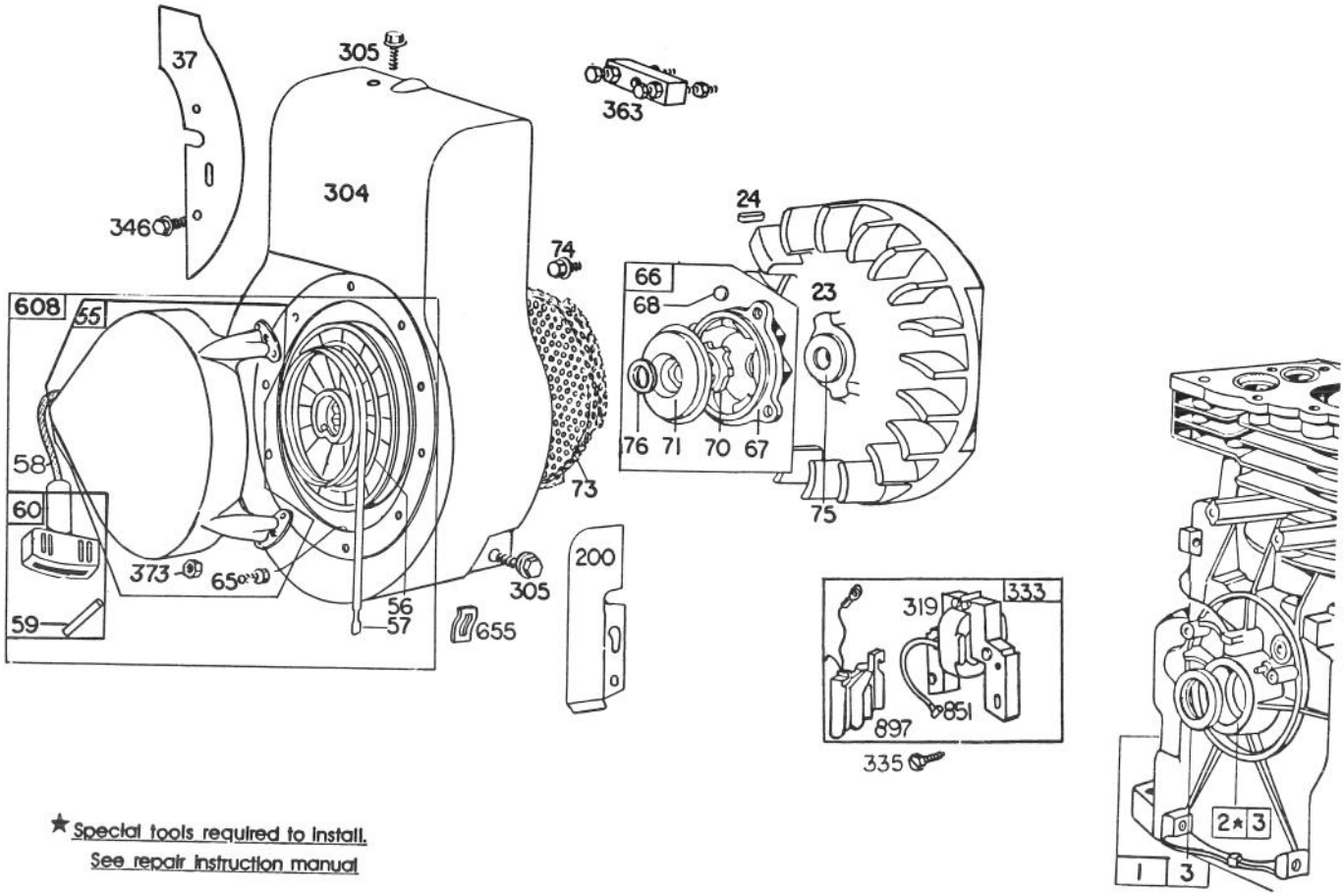

★ Special tools required to install. See repair instruction manual

ENGINE BRIGGS & STRATTON MODEL 130292-1671-02 (Continued)

Ref. No.	Part No.	Description	No. Used
1	395990	Cylinder Assembly	1
2	297565	Bushing — Cylinder Note: Requires special tools for installation	1
3	299819	Seal — Oil	1
23	297229	Flywheel — Magneto	1
24	222698	Key — Flywheel	1
37	222443	Guard — Flywheel	1
55	299431	Housing — Rewind Starter	1
56	295871	Pulley — Rewind Starter (Includes 63" long rope)	1
57	294303	Spring — Rewind Starter	1
58	66884	Rope — Rewind Starter — 63" long	1
59	230228	Pin — Starter Grip	
60	393152	Grip — Starter Rope	1
65	93067	Screw — Stamped Steel Housing Mtg. Sem	1
66	394558	Clutch Assy. — Rewind Starter	1
67	394897	Housing — Starter Clutch	1
68	63770	Ball — Clutch	1
70	298436	Ratchet — Rewind Starter	1

Ref. No.	Part No.	Description	No. Used
71	221653	Washer — Clutch Retainer	1
73	221923	Screen — Starter Pulley	1
74	93490	Screw — Sem	1
75	220865	Washer — Spring	1
76	68238	Washer — Ratchet Sealing	1
200	221480	Guide — Air	1
304	299410	Housing Blower	1
305	93158	Screw — Blower Housing Mounting	1
319	395490	Armature Assy. (Less Trigger Coil)	1
333	395491	Armature — Magneto	1
335	93414	Screw — Armature Mtg. Sem	1
346	93705	Screw — Sem	1
363	19069	Flywheel Puller (Optional Accessory)	1
373	92987	Nut — Hex.	1
608	390463	Starter Assy. — Rewind	1
655	222598	Anchor — Spring	1
851	221798	Cable Terminal — Ignition	1
897	394970	Trigger Coil	1

PRODUCT CHANGES

In an effort to make improvements available to TORO owners as quickly as possible, minor changes are incorporated into Toro's products from time to time that do not become immediately shown in the Parts Catalog. If such a change apparently has been made in your unit, which is not reflected in your manual, see your TORO Distributor or his Authorized TORO Service Dealer for information and part numbers.

IDENTIFICATION AND ORDERING

MODEL AND SERIAL NUMBERS

The Tiller has two identification numbers: a model number and a serial number. The two numbers are stamped on a decal which is located on the right side of the frame below the handle support bracket. In any correspondence concerning the tiller, supply model and serial numbers to assure that correct information and replacement parts are obtained.

To order replacement parts from an Authorized TORO Service Dealer, supply the following information:

1. Model and serial numbers of the tiller.
2. Part number, description, and quantity of part(s) desired.

Note: Do not order by reference number if a parts catalog is being used; use the PART NUMBER.

The Toro Promise

A ONE YEAR LIMITED WARRANTY

The Toro Company promises to repair your TORO Product if defective in materials or workmanship. The following time periods from the date of purchase apply:

Residential Product . . . . . 1 Year
Residential Products Used Commercially . . . 45 Days

The costs of parts and labor are included, but the customer pays the transportation costs. Just return any residential product to an Authorized TORO Service Dealer or TORO Distributor.

Should you feel your TORO Product is defective and wish to rely on The Toro Promise, the following procedure is recommended:

1. Contact any Authorized TORO Service Dealer, TORO Master Service Dealer, or TORO Distributor (the Yellow Pages of your telephone directory is a good reference source).
2. He will either instruct you to return the product to him or recommend another Authorized TORO Service outlet which might be more convenient.
3. Bring the product along with your original sales slip, or other evidence of purchase date, to the service dealer.
4. The servicing dealer will inspect the unit, advise you whether the product is defective and, if so, make all repairs necessary to correct the defect without extra charge to you.

If for any reason you are dissatisfied with the dealer's analysis of the defect or the service performed, you may contact us.

Write:

TORO Consumer Service Department
8111 Lyndale Avenue South
Minneapolis, Minnesota 55420

The above remedy of product defects through repair by an Authorized TORO Service Dealer is the purchaser's sole remedy for any defect.

THERE IS NO OTHER EXPRESS WARRANTY. ALL IMPLIED WARRANTIES OF MERCHANTABILITY AND FITNESS FOR USE ARE LIMITED TO THE DURATION OF THE EXPRESS WARRANTY.

Some states do not allow limitations on how long an implied warranty lasts, so the above limitation may not apply to you.

This warranty applies only to parts or components which are defective and does not cover repairs necessary due to normal wear, misuse, accidents, or lack of proper maintenance. Regular, routine maintenance of the unit to keep it in proper operating condition is the responsibility of the owner.

All warranty repairs reimbursable under The Toro Promise must be performed by an Authorized TORO Service Dealer using Toro approved replacement parts.

Repairs or attemped repairs by anyone other than an Authorized TORO Service Account are not reimbursable under The Toro Promise. In addition, these unauthorized repair attempts may result in additional malfunctions, the correction of which is not covered by warranty.

THE TORO COMPANY IS NOT LIABLE FOR INDIRECT, INCIDENTAL OR CONSEQUENTIAL DAMAGES IN CONNECTION WITH THE USE OF THE PRODUCT INCLUDING ANY COST OR EXPENSE OF PROVIDING SUBSTITUTE EQUIPMENT OR SERVICE DURING PERIODS OF MALFUNCTION OR NON-USE.

Some states do not allow the exclusion or limitation of incidental or consequential damages, so the above limitation or exclusion may not apply to you.

This warranty gives you specific legal rights, and you may also have other rights which vary from state to state.

COUNTRIES OTHER THAN THE UNITED STATES OR CANADA

Customers who have purchased TORO products exported from the United States or Canada should contact their TORO Distributor (Dealer) to obtain guarantee policies for your country, province or state. If for any reason you are dissatisfied with your Distributor's service or have difficulty obtaining guarantee information, contact the TORO importer. If all other remedies fail, you may contact us at The Toro Company.

Compliance with Radio Interference Regulations Certified.
Certifie Conforme au Reglement sur le Brouillage Radioelectrique.

MAINTENANCE RECORD

Date	Hours Used	Oil Change	Air Cleaner Service	Lubrication	Winter Storage	Spring Service	Spark Plug Gap