FORM NO. 3312-221

TORO®

MODEL NO. 62912 – 4000001 & UP
MODEL NO. 62923 – 4000001 & UP

**PARTS CATALOG**

# 5 H.P. LAWN VACUUM, H.P. & S.P.

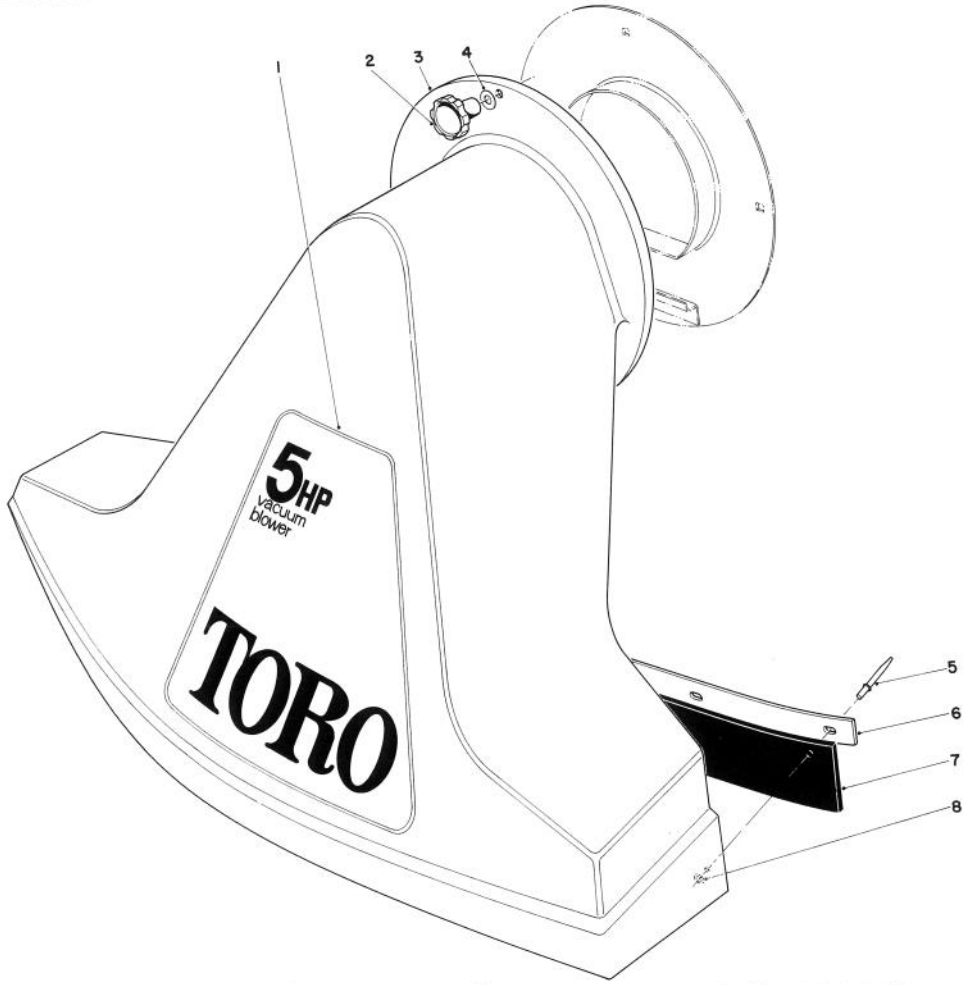


## SNOUT ASSEMBLY (Models 62912 & 62923)

| Ref. No. | Part No. | Description | No. Used |
|---|---|---|---|
| 1 | 20-9810 | Decal – Toro Vacuum Model No. 62912 | 1 |
| * | 20-6990 | Decal – Toro Vacuum Model No. 62923 | 1 |
| 2 | 19-4050 | Handle Release | 1 |
| 3 | 40-7000 | Snout Assembly (Incl. Ref. #5-8) | 1 |
| 4 | 3-3391 | Washer | 1 |
| 5 | 3290-417 | Pop Rivet | 5 |
| 6 | 20-6840 | Flap Clamp | 1 |
| 7 | 20-6830 | Rubber Flap | 1 |
| 8 | 3256-51 | Washer | 5 |

*Not Illustrated

COPYRIGHT © ALL RIGHTS RESERVED
The Toro Company – 1983
MINNEAPOLIS, MN 55420 – U.S.A.

PRICE $1.00

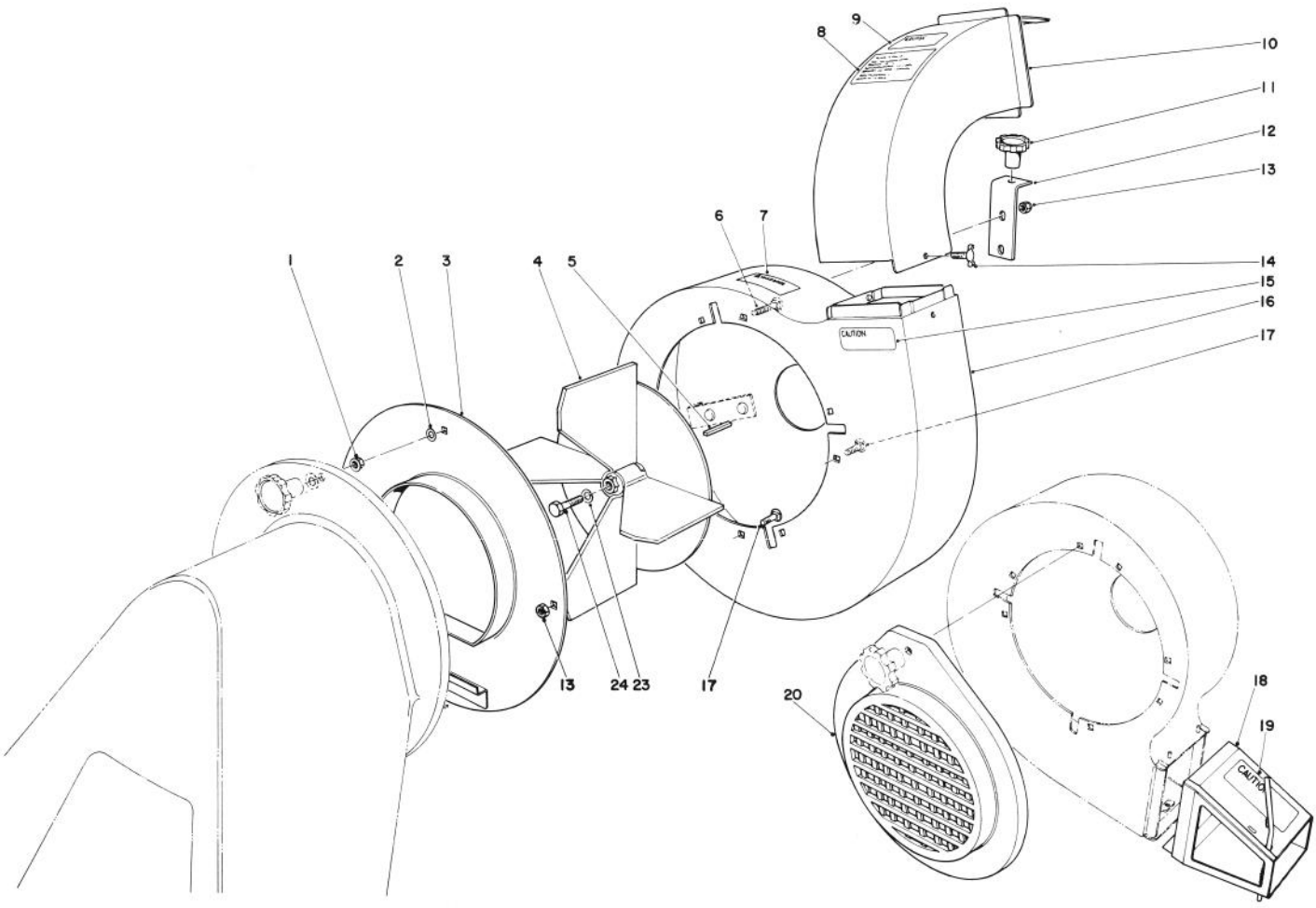


# BLOWER ASSEMBLY (Model 62912 & 62923)

| Ref. No. | Part No. | Description | No. Used |
|---|---|---|---|
| 1 | 32128-26 | Flange Nut | 1 |
| 2 | 3256-25 | Washer – Flat | 3 |
| 3 | 20-5450 | Blower Cover | 1 |
| 4 | 37-9230 | Fan | 1 |
| 5 | 7-0036 | Key | 1 |
| 6 | 3230-3 | Carriage Bolt | 1 |
| 7 | 37-9250 | Decal – Warning Rotation | 1 |
| 8 | 20-7000 | Decal – Toro Advertising | 1 |
| 9 | 20-8710 | Decal – Caution Bag | 1 |
| 10 | 20-6130 | Vacuum Chute | 1 |
| 11 | 19-4050 | Knob – Handle Release | 1 |

| Ref. No. | Part No. | Description | No. Used |
|---|---|---|---|
| 12 | 39-4660 | Mounting Bracket Housing | 2 |
| 13 | 32152-1 | Locknut | 7 |
| 14 | 3288-6 | Wing Screw | 1 |
| 15 | 20-7010 | Decal – Warning | 1 |
| 16 | 20-5890 | Blower Housing | 1 |
| 17 | 3230-19 | Carriage Bolt | 3 |
| 18 | 20-6570 | Blower Exhaust (Incl. Ref. #19) | 1 |
| 19 | 20-7900 | Decal – Exhaust | 1 |
| 20 | 20-5780 | Blower Intake | 1 |
| 23 | 3253-4 | Lockwasher | 1 |
| 24 | 40-6990 | Screw – Special | 1 |

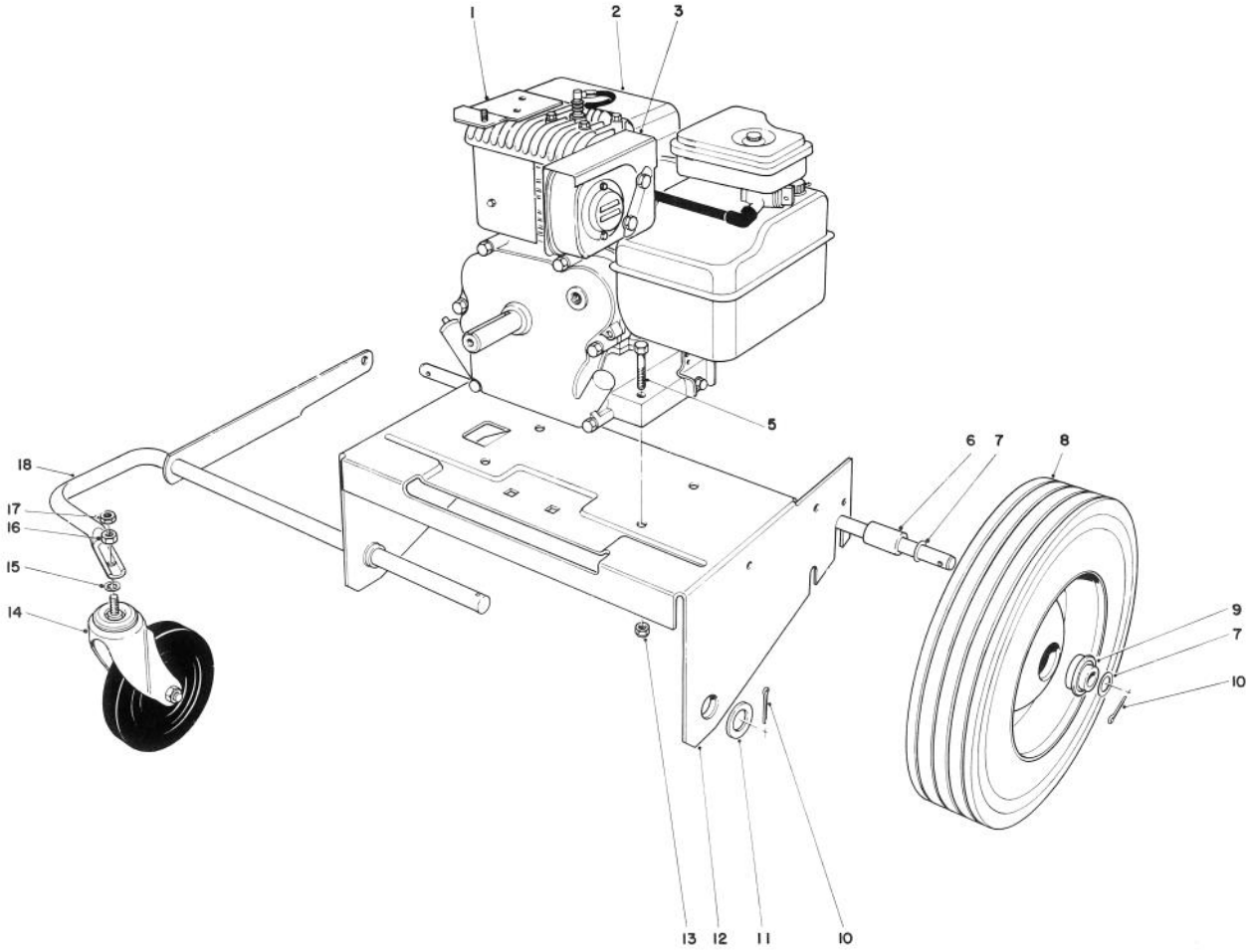


# ENGINE AND BASE ASSEMBLY (Model 62912)

| Ref. No. | Part No. | Description | No. Used |
|---|---|---|---|
| 1 | 39-4680 | Mounting Bracket | 1 |
| 2 | 221-643 | Engine | 1 |
| 3 | 39-4690 | Heat Shield-Muffler | 1 |
| 5 | 322-7 | Capscrew | 4 |
| 6 | 20-5410 | Spacer – Axle | 2 |
| 7 | 7-3590 | Flatwasher | 4 |
| 8 | 20-6100 | Wheel (Incl. Ref. #9) | 2 |
| 9 | 251-258 | Bearing | 4 |
| 10 | 3272-17 | Cotter Pin | 3 |

| Ref. No. | Part No. | Description | No. Used |
|---|---|---|---|
| 11 | 3256-29 | Flat Washer | 1 |
| 12 | 20-5560 | Engine Plate | 1 |
| 13 | 32152-1 | Locknut | 4 |
| 14 | 23-3320 | Caster | 1 |
| 15 | 3254-4 | Lockwasher Internal Tooth | 1 |
| 16 | 3217-9 | Nut | 1 |
| 17 | 32152-3 | Locknut | 1 |
| 18 | 23-3280 | Front Wheel Support | 1 |
| * | 8-6519 | Loose Parts | 1 |

*Not Illustrated

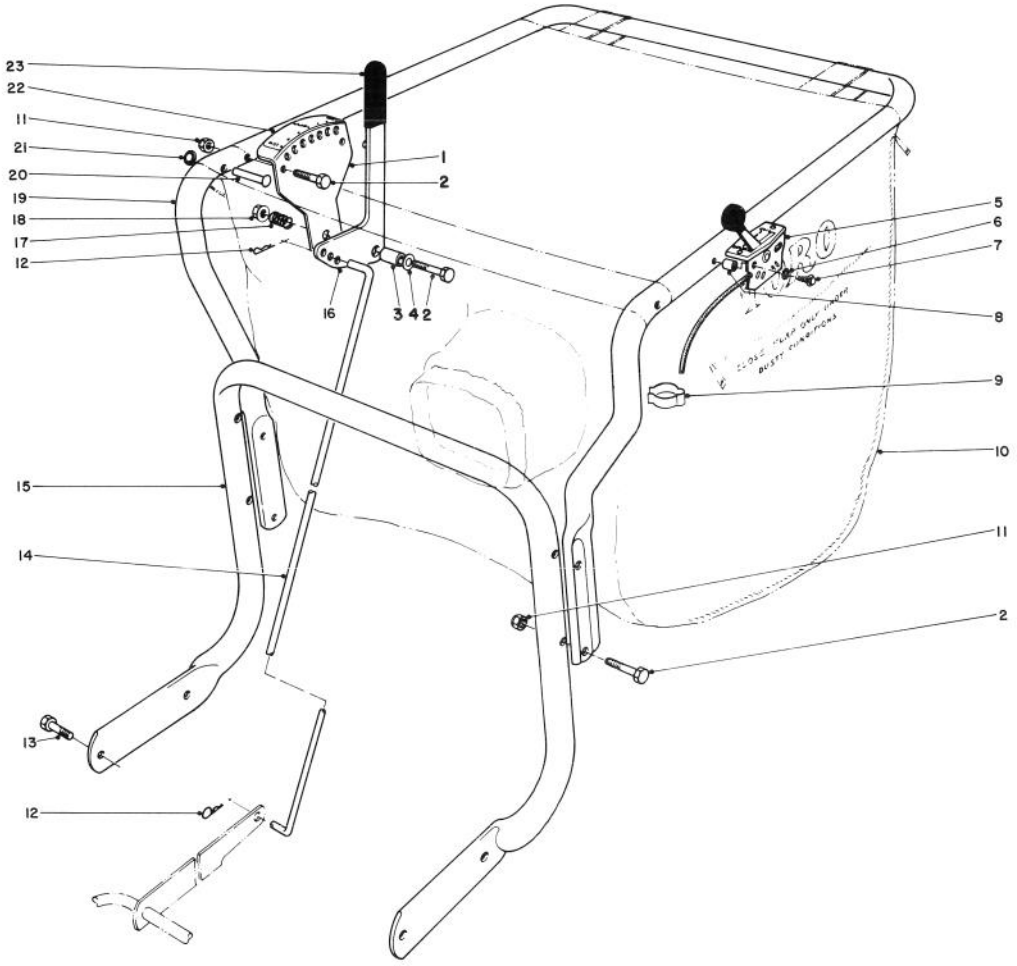


# CONTROLS AND HANDLE ASSEMBLY (Model 62912)

| Ref. No. | Part No. | Description | No. Used |
|---|---|---|---|
| 1 | 20-5820 | Adjustment Bracket | 1 |
| 2 | 322-7 | Capscrew | 7 |
| 3 | 20-5650 | Spacer – Adjustment | 1 |
| 4 | 3256-3 | Flat Washer | 1 |
| 5 | 23-3610 | Throttle Control | 1 |
| 6 | 3255-17 | Lockwasher | 2 |
| 7 | 32104-72 | Screw – Self Tapping | 2 |
| 8 | 23-3620 | Spacer | 2 |
| 9 | 2412-47 | Clip Bodine | 1 |
| 10 | 20-6090 | Bag – Vacuum | 1 |
| 11 | 32152-1 | Locknut | 10 |
| 12 | 3290-250 | Hair Pin Cotter | 2 |

| Ref. No. | Part No. | Description | No. Used |
|---|---|---|---|
| 13 | 322-4 | Capscrew | 4 |
| 14 | 33-2410 | Connector Rod | 1 |
| 15 | 20-5810 | Lower Handle | 1 |
| 16 | 23-3410 | Handle – Height Adjustment | 1 |
| 17 | 20-6110 | Spring – Height Adjustment | 1 |
| 18 | 32128-13 | Flange Nut | 1 |
| 19 | 23-3570 | Handle Upper | 1 |
| 20 | 3263-9 | Rivet | 2 |
| 21 | 3290-418 | Push Nut | 2 |
| 22 | 20-6880 | Decal – Height Adjustment | 1 |
| 23 | 3-7877 | Grip Handle | 1 |

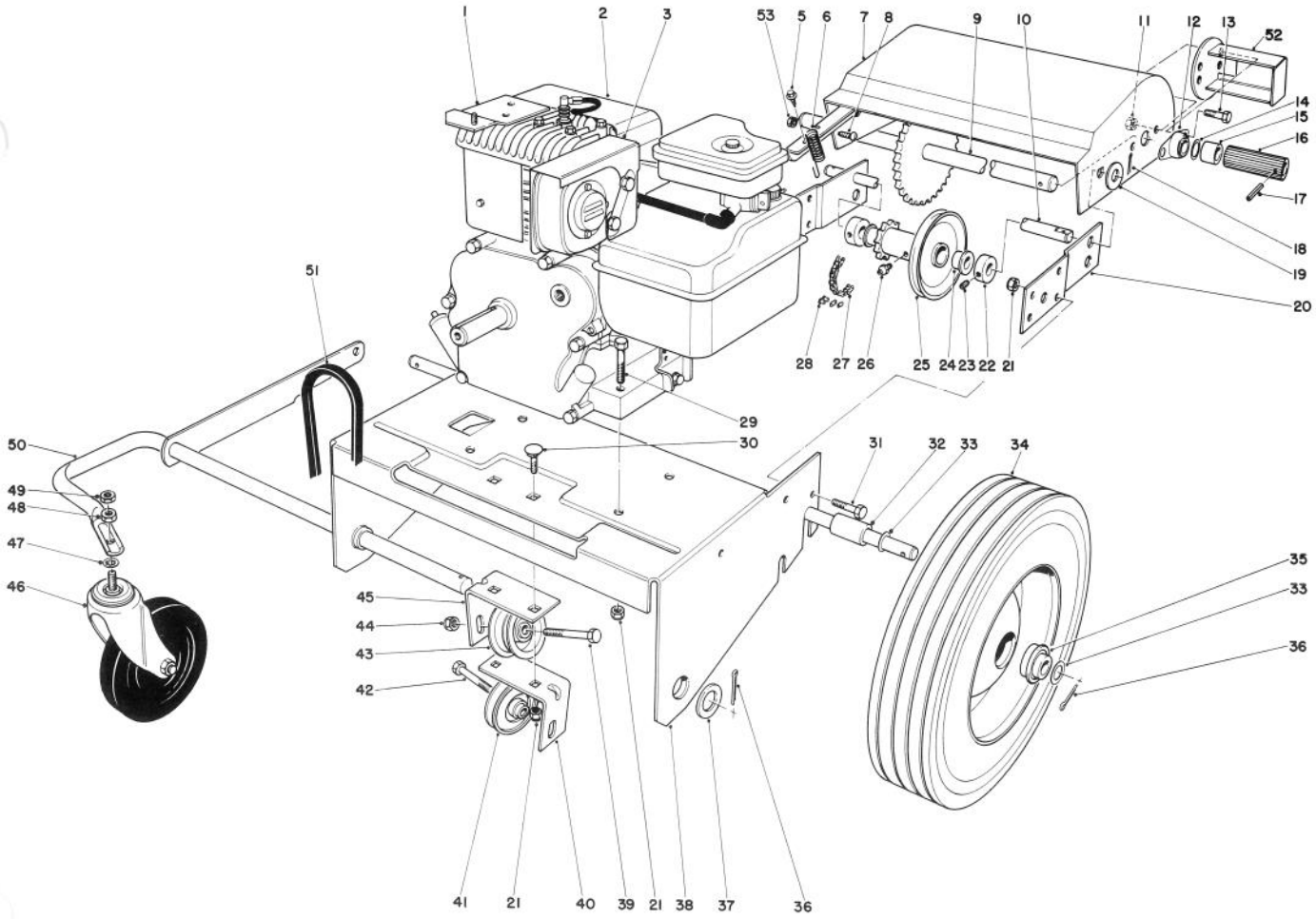


# ENGINE AND BASE ASSEMBLY (Model 62923)

| Ref. No. | Part No. | Description | No. Used |
|---|---|---|---|
| 1 | 39-4680 | Mounting Bracket | 1 |
| 2 | 221-643 | Engine | 1 |
| 3 | 39-4690 | Heat Shield – Muffler | 1 |
| 5 | 32140-32 | Screw Self Tapping | 1 |
| 6 | 23-3520 | Spring – Traction | 1 |
| 7 | 20-6040 | Guard | 1 |
| 8 | 3290-111 | Screw | 1 |
| 9 | 20-7270 | Shaft Friction | 1 |
| 10 | 20-5870 | Shaft | 1 |
| 11 | 3296-29 | Nut | 4 |
| 12 | 256-236 | Bearing | 2 |
| 13 | 322-2 | Hex Hd. Capscrew | 4 |
| 14 | 7-3590 | Washer | 2 |
| 15 | 20-5460 | Spacer | 2 |
| 16 | 20-5960 | Friction Wheel | 2 |
| 17 | 32121-4 | Roll Pin | 2 |
| 18 | 3272-7 | Cotter Pin | 2 |
| 19 | 3256-26 | Washer | 2 |
| 20 | 43-6830 | Bracket Mounting | 2 |
| 21 | 32152-1 | Locknut | 12 |
| 22 | 20-5950 | Set Screw Collar (Incl. Ref. #23) | 2 |
| 23 | 3245-1 | Set Screw | 2 |
| 24 | 256-105 | Flange Bushing | 2 |

| Ref. No. | Part No. | Description | No. Used |
|---|---|---|---|
| 25 | 20-6000 | Idler Assembly (Incl. Ref. #24 & 26) | 1 |
| 26 | 302-5 | Grease Fitting | 1 |
| 27 | 3-3434 | Traction Chain (Incl. Ref. #28) | 1 |
| 28 | 2710-31 | Connecting Link | 1 |
| 29 | 322-7 | Capscrew | 4 |
| 30 | 3230-20 | Carriage Bolt | 2 |
| 31 | 322-4 | Capscrew | 4 |
| 32 | 20-5410 | Spacer Axle | 2 |
| 33 | 7-3590 | Flat Washer | 4 |
| 34 | 20-6100 | Wheel (Incl. Ref. #35) | 2 |
| 35 | 251-258 | Bearing | 4 |
| 36 | 3272-17 | Cotter Pin | 3 |
| 37 | 3256-29 | Flat Washer | 1 |
| 38 | 20-5560 | Engine – Plate | 1 |
| 39 | 323-10 | Capscrew | 1 |
| 40 | 20-8690 | Idler Mounting Bracket L.H. | 1 |
| 41 | 12-5820 | Idler Pulley | 1 |
| 42 | 323-19 | Capscrew | 1 |
| 43 | 12-6700 | Pulley Idler | 1 |
| 44 | 32152-2 | Locknut | 2 |
| 45 | 20-8680 | Idler Mounting Bracket R.H. | 1 |
| 46 | 23-3320 | Caster | 1 |

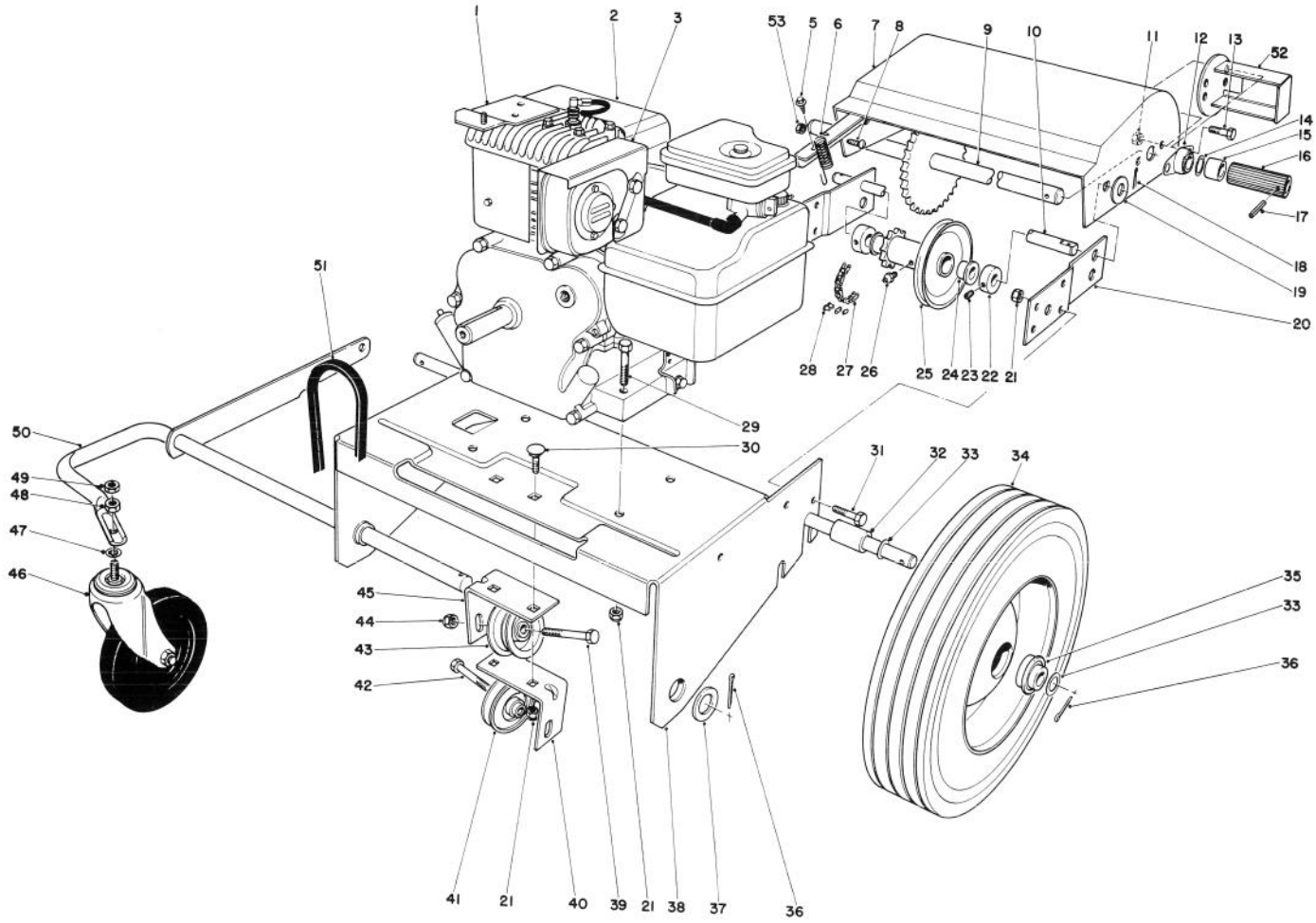


# ENGINE AND BASE ASSEMBLY (Model 62923) (Continued)

| Ref. No. | Part No. | Description | No. Used |
|---|---|---|---|
| 47 | 3254-4 | Lock Washer Internal Tooth | 1 |
| 48 | 3217-9 | Nut | 1 |
| 49 | 32152-3 | Locknut | 1 |
| 50 | 23-3280 | Front Wheel Support | 1 |

| Ref. No. | Part No. | Description | No. Used |
|---|---|---|---|
| 51 | 20-5990 | V-Belt | 1 |
| 52 | 37-9210 | Guard | 2 |
| 53 | 32149-7 | Nut | 1 |
| * | 8-6539 | Loose Parts Bag | 1 |

*Not Illustrated

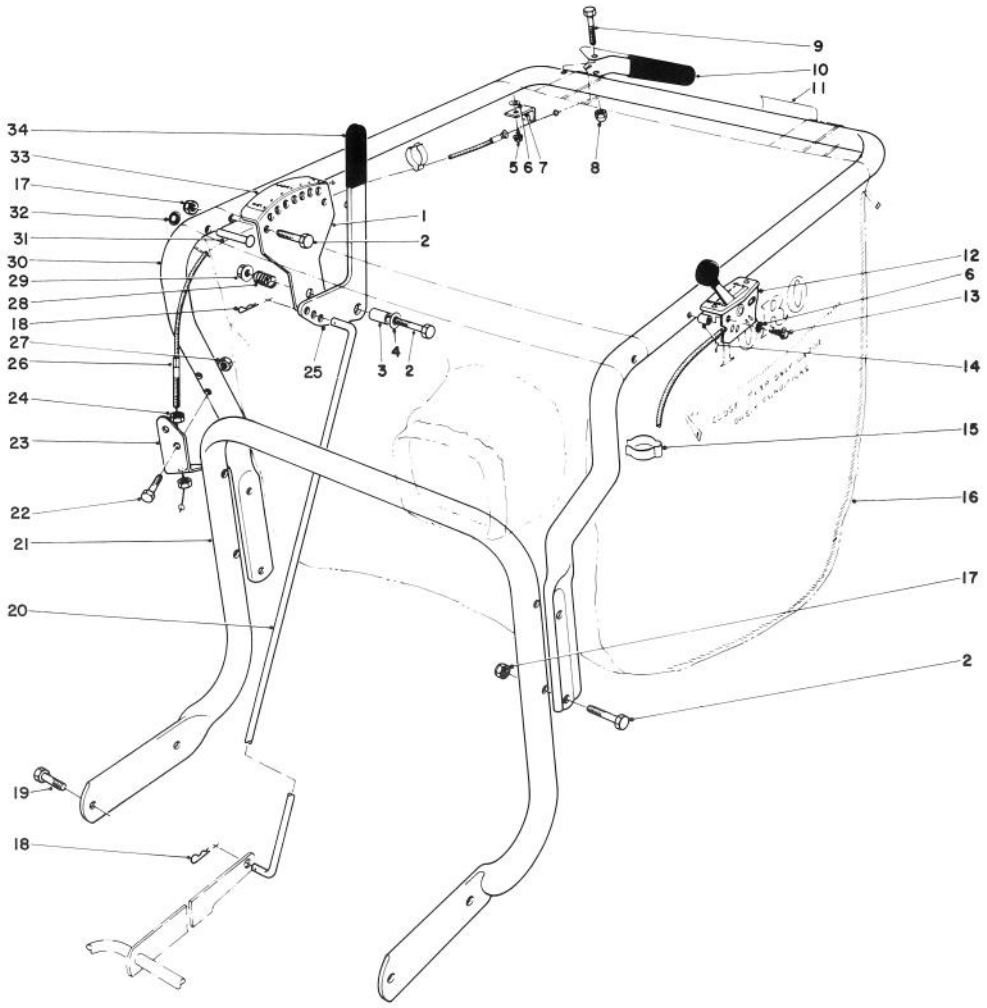


# CONTROLS AND HANDLE ASSEMBLY (Model 62923)

| Ref. No. | Part No. | Description | No. Used |
|---|---|---|---|
| 1 | 20-5820 | Bracket Adjustment | 1 |
| 2 | 322-7 | Capscrew | 7 |
| 3 | 20-5650 | Spacer Adjustment | 1 |
| 4 | 3256-3 | Washer – Plain | 1 |
| 5 | 12-5450 | Screw – Special | 1 |
| 6 | 3255-7 | Washer External Tooth | 3 |
| 7 | 20-8780 | Clip – Retaining | 1 |
| 8 | 32111-7 | Nut – Cap | 1 |
| 9 | 321-10 | Capscrew | 1 |
| 10 | 25-7880 | Lever | 1 |
| 11 | 20-8700 | Decal – Traction Control | 1 |
| 12 | 23-3610 | Throttle Control | 1 |
| 13 | 32104-72 | Screw – Self Tapping | 2 |
| 14 | 23-3620 | Spacer | 2 |
| 15 | 2412-47 | Clip Bodine | 2 |
| 16 | 20-6090 | Bag – Vacuum | 1 |
| 17 | 32152-1 | Locknut | 6 |

| Ref. No. | Part No. | Description | No. Used |
|---|---|---|---|
| 18 | 3290-250 | Hair Pin Cotter | 2 |
| 19 | 322-4 | Capscrew | 2 |
| 20 | 33-2410 | Connector Rod | 1 |
| 21 | 20-5810 | Lower Handle | 1 |
| 22 | 321-9 | Hex Hd. Capscrew | 2 |
| 23 | 33-2830 | Bowden Mount | 1 |
| 24 | 32149-5 | Nut | 2 |
| 25 | 23-3410 | Handle – Height Adjustment | 1 |
| 26 | 25-7860 | Bodine Cable | 1 |
| 27 | 32152-4 | Locknut | 2 |
| 28 | 20-6110 | Spring – Height Adjustment | 1 |
| 29 | 32128-13 | Flange Nut | 1 |
| 30 | 23-3570 | Handle – Upper | 1 |
| 31 | 3263-9 | Rivet Round Head | 2 |
| 32 | 3290-418 | Push Nut | 2 |
| 33 | 20-6880 | Decal – Height Adjustment | 1 |
| 34 | 3-7877 | Grip Handle | 1 |

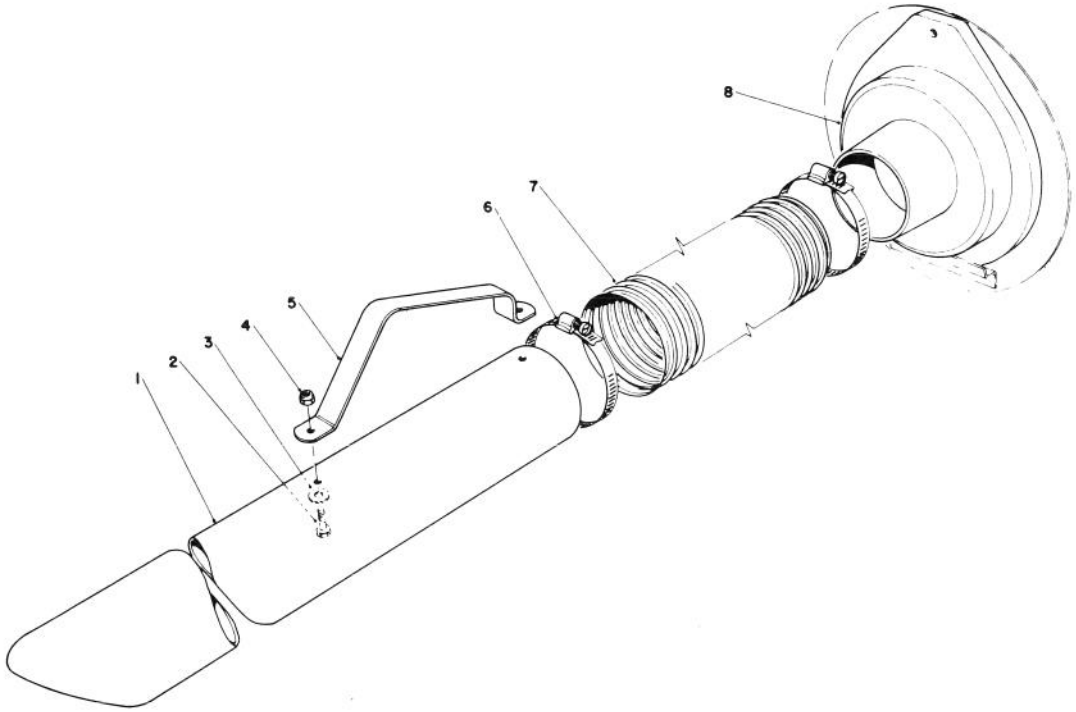


# VACUUM HOSE KIT (Model 59085) (Optional)

| Ref. No. | Part No. | Description | No. Used |
|---|---|---|---|
| 1 | 20-5750 | Nozzle | 1 |
| 2 | 321-3 | Capscrew | 2 |
| 3 | 20-5690 | Special Washer | 2 |
| 4 | 32149-2 | Locknut | 2 |

| Ref. No. | Part No. | Description | No. Used |
|---|---|---|---|
| 5 | 20-6200 | Handle | 1 |
| 6 | 2412-46 | Hose Clamp | 2 |
| 7 | 20-6650 | Vacuum Hose | 1 |
| 8 | 20-5740 | Adaptor | 1 |

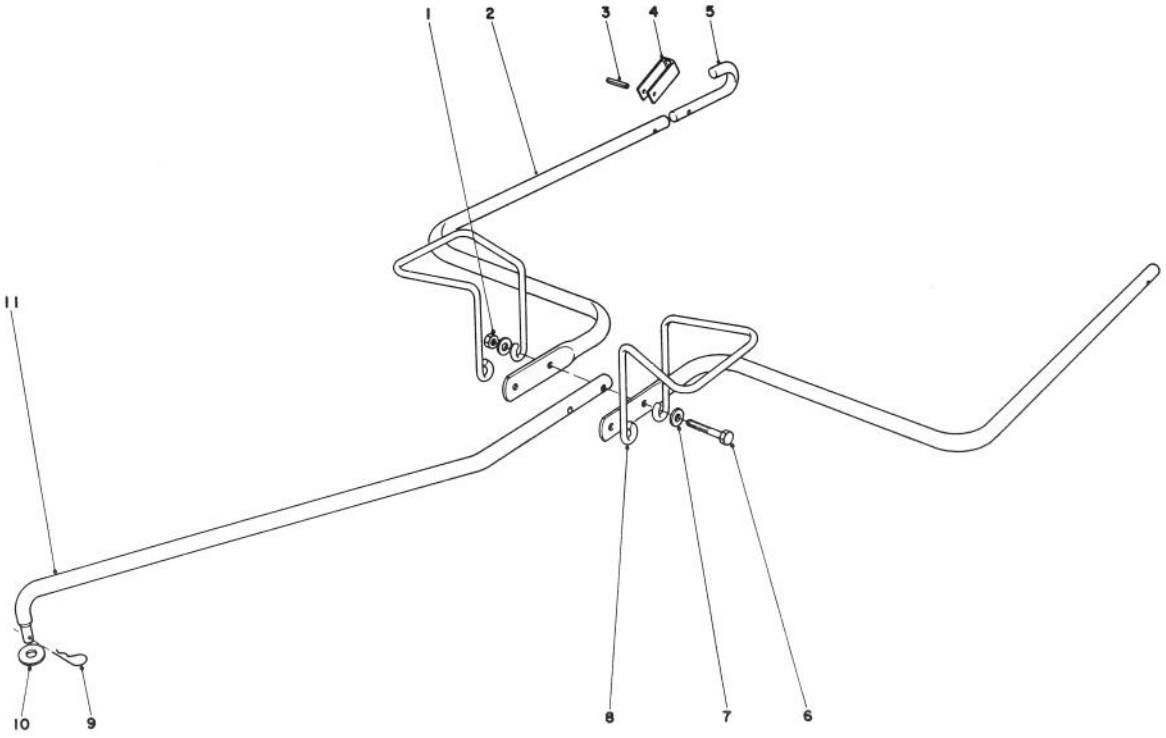


# HITCH KIT (Model 59087) (Optional)

| Ref. No. | Part No. | Description | No. Used |
|---|---|---|---|
| 1 | 32152-4 | Lock Nut | 2 |
| 2 | 20-8010 | Hitch Arm | 2 |
| 3 | 32121-18 | Pin Slotted Roll | 2 |
| 4 | 20-8030 | Hitch Lock | 2 |
| 5 | 20-8850 | Hook Hitch Arm | 2 |
| 6 | 321-15 | Capscrew | 2 |

| Ref. No. | Part No. | Description | No. Used |
|---|---|---|---|
| 7 | 3256-2 | Flat Washer | 4 |
| 8 | 23-5190 | Support Bag | 2 |
| 9 | 3290-250 | Hair Pin Cotter | 1 |
| 10 | 3290-377 | Push Nut | 1 |
| 11 | 23-5360 | Hitch Pole | 1 |

# ENGINE BRIGGS & STRATTON MODEL NO. 130202-1640-01

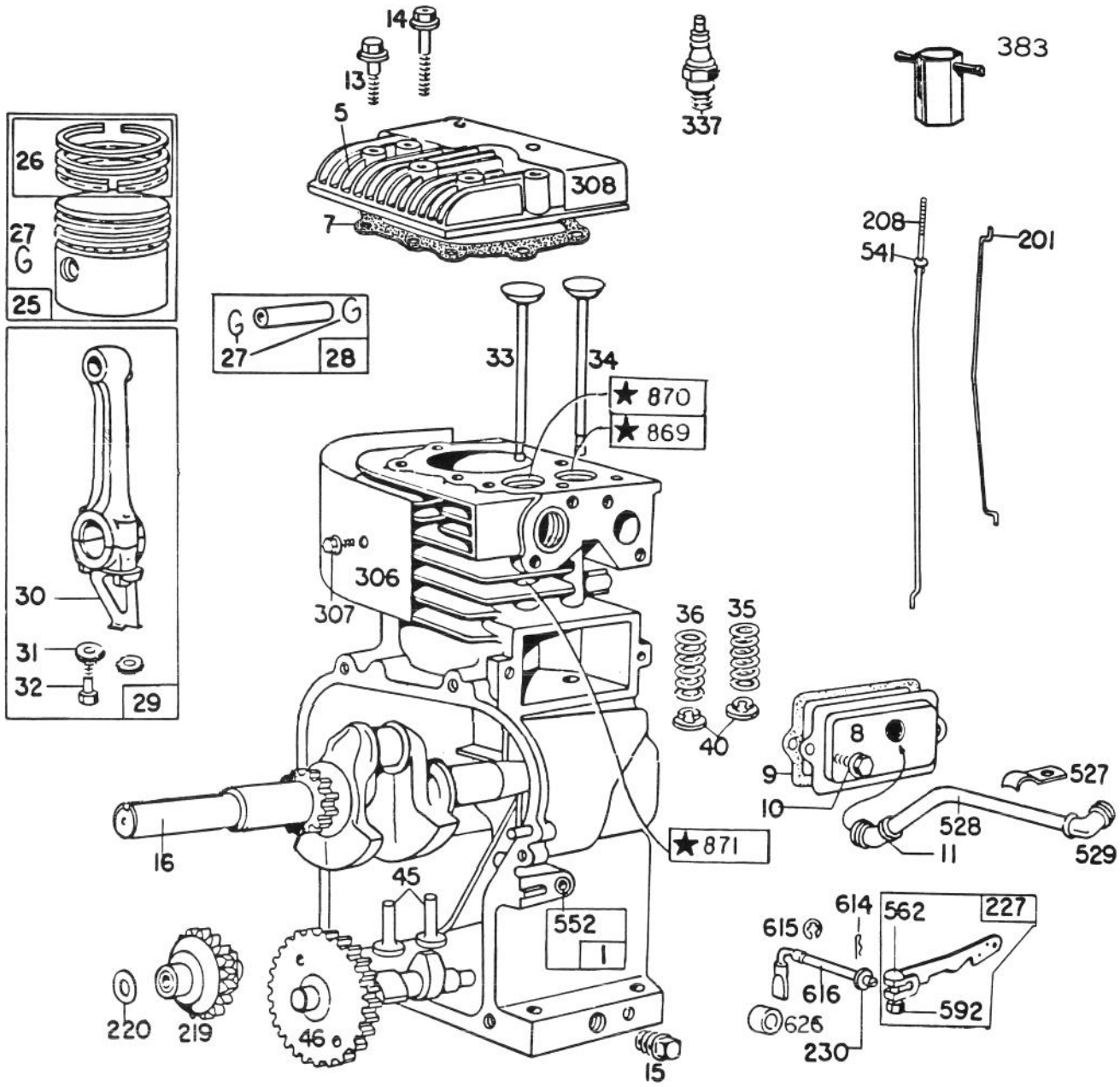


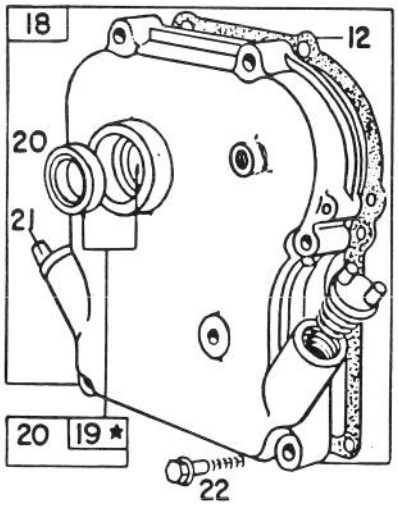


358 GASKET SET

★ REQUIRES SPECIAL TOOLS TO INSTALL
SEE REPAIR INSTRUCTION MANUAL

# ENGINE BRIGGS & STRATTON MODEL NO. 130202-1640-01

| Ref. No. | Part No. | Description | No. Used |
|---|---|---|---|
| 1 | 395990 | Cylinder Assembly | 1 |
| 5 | 211542 | Head – Cylinder | 1 |
| 7 | *270383 | Gasket – Cylinder Head | 1 |
| 8 | 294178 | Breather – Valve Chamber | 1 |
| 9 | *27549 | Gasket – Valve Cover | 1 |
| 10 | 93394 | Screw – Breather Mtg. | 1 |
| 11 | 66578 | Grommet – Breather Tube | 1 |
| 12 | *270080 | Gasket – Crankcase – .015" thick (Std.) | 1 |
| | *270125 | Gasket – Crankcase – .005" thick | 1 |
| | *270126 | Gasket – Crankcase – .009" thick | 1 |
| 13 | 93368 | Screw – Cylinder Head (2-3/32" long) | 1 |
| | | **Note:** 391608 Bracket – Mtg. Furnished by equipment manufacturer | |
| 14 | 93369 | Screw – Cylinder Head (2-15/32" long) | 1 |
| 15 | 91249 | Plug – Pipe, 1/4" Std., Square Head | 1 |
| 16 | 260938 | Crankshaft | 1 |
| 18 | 297602 | Cover Assy. – Crankcase | 1 |
| 19 | 297603 | Bushing – Crankcase Cover | 1 |
| | | **Note:** Requires special tools for installation. | |
| 20 | 294606 | Seal – Oil | 1 |
| 21 | 66768 | Plug – Oil Filler | 1 |
| 22 | 93032 | Screw – Crankcase Cover Mounting | 1 |
| 25 | 298904 | Piston Assy. Standard | 1 |
| | 298905 | Piston Assy. – .010" O.S. | 1 |
| | 298906 | Piston Assy. – .020" O.S. | 1 |
| | 298907 | Piston Assy. – .030" O.S. | 1 |
| | | **PISTON RING SETS:** | |
| | | **Note:** For Chrome Piston Ring Set – Standard Size – Order Part No. 299742. | |
| 26 | 298982 | Ring Set – Standard Piston | 1 |
| | 298983 | Ring Set – .010" O.S. Piston | 1 |
| | 298984 | Ring Set – .020" O.S. Piston | 1 |
| | 298985 | Ring Set – .030" O.S. Piston | 1 |
| 27 | 26026 | Lock – Piston Pin | 1 |
| 28 | 298909 | Pin Assy. – Piston – Standard | 1 |
| | 298908 | Pin Assy. – Piston – .005" O.S. | 1 |
| 29 | 299430 | Rod Assy. – Connecting | 1 |
| | | **Note:** For Connecting Rod with .020" undersize Crankpin Bore – Order No. 390459. | |
| 30 | 221890 | Dipper – Connecting Rod | 1 |
| 31 | 222282 | Washer (One for each screw) | 1 |
| 32 | 92296 | Screw – Connecting Rod | 1 |
| 33 | 211119 | Valve Exhaust | 1 |
| 34 | 261044 | Valve – Intake | 1 |
| 35 | 260552 | Spring – Intake Valve | 1 |
| 36 | 26478 | Spring – Exhaust Valve | 1 |
| 40 | 93312 | Retainer – Valve Spring | 1 |
| 45 | 260642 | Tappet – Valve | 1 |
| 46 | 211117 | Gear – Cam | 1 |
| 201 | 261558 | Link – Governor | 1 |
| 208 | 230737 | Rod – Control | 1 |
| 219 | 391737 | Gear – Governor | 1 |
| 220 | 221551 | Washer – Thrust | 1 |
| 227 | 393920 | Lever Assy. – Governor | 1 |
| 230 | 222450 | Washer – Governor Lever (1/4" I.D.) | 1 |
| 306 | 221511 | Shield – Cylinder | 1 |
| 307 | 93042 | Screw – Cylinder Shield Mounting | 1 |
| 308 | 221512 | Cover – Cylinder Head | 1 |
| 337 | 293918 | Plug – Spark (1-1/2" Resistor Type) | 1 |
| 358 | 297615 | Gasket Set | 1 |
| 383 | 89838 | Wrench – Spark Plug | 1 |
| 527 | 221514 | Clamp – Breather Tube | 1 |
| 528 | 230722 | Tube – Breather | 1 |
| 529 | 67838 | Grommet – Breather Tube | 1 |
| 541 | 22398 | Washer | 1 |
| 552 | 231079 | Bushing – Governor | 1 |
| 562 | 92613 | Bolt – Governor Lever | 1 |
| 592 | 231082 | Nut – Hex. – 10-24 | 1 |
| 614 | 93306 | Cotter – Hair Pin | 1 |
| 615 | 93307 | Retainer – E-Ring | 1 |
| 616 | 231077 | Crank – Governor | 1 |
| 626 | 230749 | Spacer – Governor Crank | 1 |
| 869 | 211787 | Seat – Intake Valve (Std.) | 1 |
| 870 | 211172 | Seat – Exhaust Valve (Std.) | 1 |
| 871 | 63709 | Guide – Exhaust Valve | 1 |

*Included in Gasket Set – Part No. 297615.

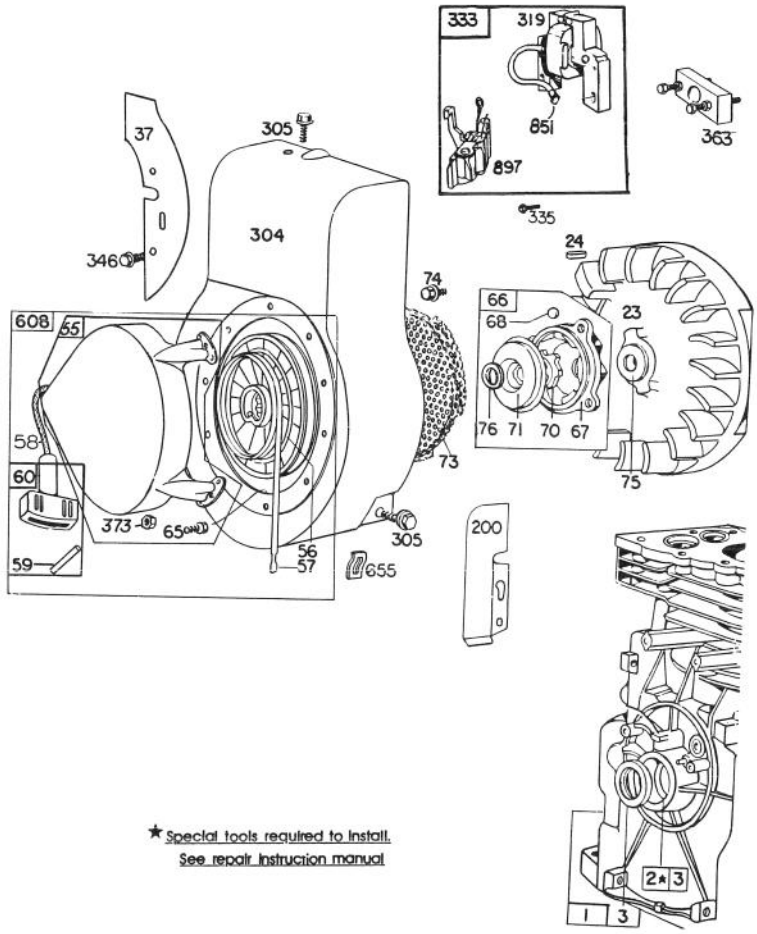


★ Special tools required to install. See repair instruction manual

# ENGINE BRIGGS & STRATTON MODEL NO. 130202-1640-01

| Ref. No. | Part No. | Description | No. Used |
|---|---|---|---|
| 1 | 395990 | Cylinder Assembly | 1 |
| 2 | 297565 | Bushing – Cylinder | 1 |
| | | **Note:** Requires special tools for installation. | |
| 3 | 299819 | Seal – Oil | 1 |
| 23 | 297229 | Flywheel – Magneto | 1 |
| 24 | 222698 | Key – Flywheel | 1 |
| 37 | 222443 | Guard – Flywheel | 1 |
| 55 | 299431 | Housing – Rewind Starter | 1 |
| 56 | 295871 | Pulley – Rewind Starter (Includes 63" long rope) | 1 |
| 57 | 294303 | Spring – Rewind Starter | 1 |
| 58 | 66884 | Rope – Rewind Starter – 63" long | 1 |
| 59 | 230228 | Pin – Starter Grip | 1 |
| 60 | 393152 | Grip – Starter Rope | 1 |
| 65 | 93067 | Screw – Stamped Steel Housing Mtg. | 1 |
| 66 | 394558 | Clutch Assy. – Rewind Starter | 1 |
| 67 | 394897 | Housing – Starter Clutch | 1 |
| 68 | 63770 | Ball – Clutch | 1 |

| Ref. No. | Part No. | Description | No. Used |
|---|---|---|---|
| 70 | 298436 | Ratchet – Rewind Starter | 1 |
| 71 | 221653 | Washer – Clutch Retainer | 1 |
| 73 | 221923 | Screen – Starter Pulley | 1 |
| 74 | 93490 | Screw | 1 |
| 75 | 220865 | Washer – Spring | 1 |
| 76 | 68238 | Washer – Ratchet Sealing | 1 |
| 200 | 221480 | Guide – Air | 1 |
| 304 | 299410 | Housing – Blower | 1 |
| 305 | 93158 | Screw – Blower Housing Mtg. | |
| 319 | 395490 | Armature Assy. (Less Trigger Coil) | 1 |
| 333 | 395491 | Armature – Magneto | 1 |
| 335 | 93414 | Screw – Armature Mtg. | 1 |
| 346 | 93705 | Screw | 1 |
| 363 | 19069 | Flywheel Puller (Optional Accessory) | 1 |
| 373 | 92987 | Nut – Hex. | 1 |
| 608 | 390463 | Starter Assy. – Rewind | 1 |
| 655 | 222598 | Anchor – Spring | 1 |
| 851 | 221798 | Cable Terminal – Ignition | 1 |
| 897 | 394970 | Trigger Coil | 1 |

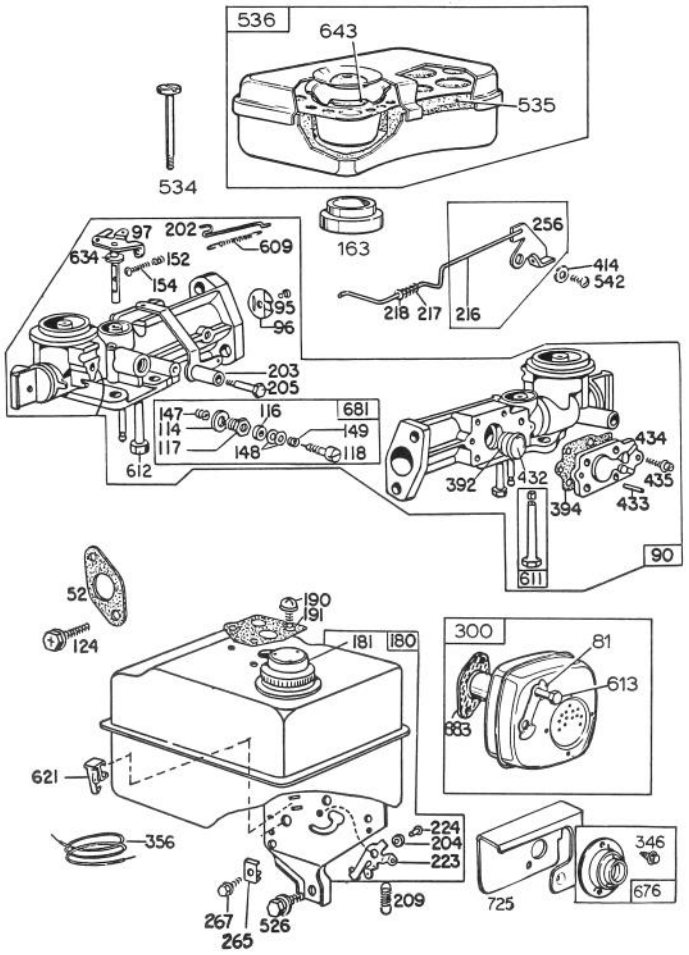


# ENGINE BRIGGS & STRATTON MODEL NO. 130202-1640-01

| Ref. No. | Part No. | Description | No. Used |
|---|---|---|---|
| 52 | *27355 | Gasket – Carburetor Mtg. | 2 |
| 81 | 222263 | Lock – Screw | 1 |
| 90 | 299576 | Carburetor Assembly | 1 |
| 95 | 93499 | Screw – Throttle Valve to Shaft | 1 |
| 96 | 211203 | Throttle – Carburetor | 1 |
| 97 | 299212 | Shaft and Lever – Throttle | 1 |
| 114 | 66594 | Gasket – Needle Valve Nut | 1 |
| 116 | 65978 | Packing – Needle Valve | 1 |
| 117 | 230590 | Nut – Needle Valve | 1 |
| 118 | 23433 | Valve – Needle | 1 |
| 124 | 93357 | Screw – Hex. Head | 1 |
| 147 | 230591 | Seat – Needle Valve | 1 |
| 148 | 22235 | Washer – Needle Valve | 2 |
| 149 | 26336 | Spring – Needle Valve | 1 |
| 152 | 260575 | Spring – Throttle Adjustment | 1 |
| 154 | 93527 | Screw – Machine, Rd. Hd. – 5-40 x 5/8" | 1 |
| 163 | 27660 | Gasket – Air Cleaner Mounting | 1 |
| 180 | 297600 | Tank Assembly – Fuel | 1 |
| 181 | 297863 | Cap – Fuel Tank | 1 |
| 190 | 93440 | Screw – Fuel Tank Mounting | 1 |
| 191 | *27911 | Gasket – Fuel Tank Mounting | 2 |
| 202 | 260678 | Link – Throttle | 1 |
| 203 | 393919 | Crank – Bell | 1 |
| 204 | 222962 | Bushing – Governor Lever (Flat) | 1 |
| 205 | 93838 | Screw – Shoulder | 1 |
| 209 | 260695 | Spring – Governor | 1 |
| 216 | 299859 | Link – Choke (Incl. Bell Crank) | 1 |
| 217 | 260189 | Spring – Choke Link | 1 |
| 218 | 221198 | Washer – Choke Link | 1 |
| 223 | 221517 | Lever Governor Control | 1 |
| 224 | 93491 | Rivet – Governor Control Lever Mounting | 1 |

| Ref. No. | Part No. | Description | No. Used |
|---|---|---|---|
| 256 | 299859 | Crank – Bell (Includes Choke Link) | 1 |
| 265 | 221535 | Clamp – Casing | 1 |
| 267 | 93496 | Screw | 1 |
| 300 | 393615 | Muffler – Exhaust | 1 |
| 346 | 93705 | Screw | 1 |
| 356 | 299500 | Wire – Ground | 1 |
| 392 | 260455 | Spring – Fuel Pump Diaphragm | 1 |
| 394 | 270026 | Diaphragm | 1 |
| 414 | 220982 | Washer | 1 |
| 432 | 221377 | Cap – Spring | 1 |
| 433 | 93265 | Pin – Diaphragm Cover | 1 |
| 434 | 210959 | Cover – Diaphragm | 1 |
| 435 | 93141 | Screw – Diaphragm Cover | 1 |
| 526 | 93343 | Screw – Tank Bracket Mtg. | 1 |
| 534 | 93322 | Screw – Air Cleaner | 1 |
| 535 | 27987 | Element – Air Cleaner | 1 |
| 536 | 297036 | Cleaner Assembly – Air | 1 |
| 542 | 92265 | Screw | 1 |
| 609 | 260694 | Spring – Throttle Link | 1 |
| 611 | 391813 | Fuel Pipe and Clip Assembly | 1 |
| 612 | 296811 | Pipe – Fuel | 1 |
| 613 | 93935 | Screw – Hex. Hd. Shoulder | 1 |
| 621 | 297472 | Switch – Stop | 1 |
| 634 | 270167 | Washer, Throttle Shaft (Felt) | 1 |
| 643 | 280374 | Cup – Air Cleaner | 1 |
| 676 | 395700 | Deflector – Exhaust (Direct Outlet) | 1 |
| 681 | 299060 | Needle Valve Kit | 1 |
| 725 | 222595 | Shield – Heat | 1 |
| | | **Note:** Furnished by the equipment manufacturer. | |
| 883 | 270918 | Gasket – Muffler | 1 |

*Included in Gasket Set – Part No. 297615.

# The Toro Promise

*A ONE YEAR LIMITED WARRANTY*

*The Toro Company promises to repair your TORO Product if defective in materials or workmanship. The following time periods from the date of purchase apply:*

| | |
|---|---|
| Residential Product . . . . . | 1 Year |
| Residential Products Used Commercially . . . | 45 Days |

*The costs of parts and labor are included, but the customer pays the transportation costs. Just return any residential product to an Authorized TORO Service Dealer or TORO Distributor.*

Should you feel your TORO Product is defective and wish to rely on The Toro Promise, the following procedure is recommended:

1. Contact any Authorized TORO Service Dealer, TORO Master Service Dealer, or TORO Distributor (the Yellow Pages of your telephone directory is a good reference source).
2. He will either instruct you to return the product to him or recommend another Authorized TORO Service outlet which might be more convenient.
3. Bring the product along with your original sales slip, or other evidence of purchase date, to the service dealer.
4. The servicing dealer will inspect the unit, advise you whether the product is defective and, if so, make all repairs necessary to correct the defect without extra charge to you.

If for any reason you are dissatisfied with the dealer's analysis of the defect or the service performed, you may contact us.

Write:

TORO Consumer Service Department
8111 Lyndale Avenue South
Minneapolis, Minnesota 55420

The above remedy of product defects through repair by an Authorized TORO Service Dealer is the purchaser's sole remedy for any defect.

THERE IS NO OTHER EXPRESS WARRANTY. ALL IMPLIED WARRANTIES OF MERCHANTABILITY AND FITNESS FOR USE ARE LIMITED TO THE DURATION OF THE EXPRESS WARRANTY.

Some states do not allow limitations on how long an implied warranty lasts, so the above limitation may not apply to you.

This warranty applies only to parts or components which are defective and does not cover repairs necessary due to normal wear, misuse, accidents, or lack of proper maintenance. Regular, routine maintenance of the unit to keep it in proper operating condition is the responsibility of the owner.

All warranty repairs reimbursable under The Toro Promise must be performed by an Authorized TORO Service Dealer using Toro approved replacement parts.

Repairs or attempted repairs by anyone other than an Authorized TORO Service Account are not reimbursable under The Toro Promise. In addition, these unauthorized repair attempts may result in additional malfunctions, the correction of which is not covered by warranty.

THE TORO COMPANY IS NOT LIABLE FOR INDIRECT, INCIDENTAL OR CONSEQUENTIAL DAMAGES IN CONNECTION WITH THE USE OF THE PRODUCT INCLUDING ANY COST OR EXPENSE OF PROVIDING SUBSTITUTE EQUIPMENT OR SERVICE DURING PERIODS OF MALFUNCTION OR NON-USE.

Some states do not allow the exclusion or limitation of incidental or consequential damages, so the above limitation or exclusion may not apply to you.

This warranty gives you specific legal rights, and you may also have other rights which vary from state to state.

## COUNTRIES OTHER THAN THE UNITED STATES OR CANADA

Customers who have purchased TORO products exported from the United States or Canada should contact their TORO Distributor (Dealer) to obtain guarantee policies for your country, province or state. If for any reason you are dissatisfied with your Distributor's service or have difficulty obtaining guarantee information, contact the TORO importer. If all other remedies fail, you may contact us at The Toro Company.

Compliance with Radio Interference Regulations Certified.
Certifie Conforme au Reglement sur le Brouillage Radioelectrique.

# PRODUCT CHANGES

In an effort to make improvements available to TORO owners as quickly as possible, minor changes are incorporated into Toro's products from time to time that do not become immediately shown in the Parts Catalog. If such a change apparently has been made in your unit, which is not reflected in your manual, see your TORO Distributor or his Authorized TORO Service Dealer for information and part numbers.

# IDENTIFICATION AND ORDERING

**Model and Serial Numbers**

The lawn vacuum has two identification numbers: a model number and a serial number. The two numbers are stamped on a decal which is located on right front corner of engine plate. In any correspondence concerning the lawn vacuum, supply model and serial numbers to assure that correct information and replacement parts are obtained.

To order replacement parts from an Authorized TORO Service Dealer, supply the following information:

1. Model and serial numbers of the lawn vacuum.
2. Part number, description, and quantity of part(s) desired.

**NOTE:** Do not order by reference number if a parts catalog is being used; use the PART NUMBER.

***Keep Your TORO All Toro*** Genuine TORO PARTS & ACCESSORIES ***Insist on Genuine Toro Parts***

# MAINTENANCE RECORD

| Date | Hours Used | Oil Change | Lubrication | Summer Storage | Fall Service | Spark Plug Gap |
|---|---|---|---|---|---|---|
| | | | | | | |
| | | | | | | |
| | | | | | | |
| | | | | | | |
| | | | | | | |
| | | | | | | |
| | | | | | | |
| | | | | | | |
| | | | | | | |
| | | | | | | |
| | | | | | | |
| | | | | | | |
| | | | | | | |
| | | | | | | |
| | | | | | | |
| | | | | | | |

# MAINTENANCE RECORD

| Date | Hours Used | Oil Change | Lubrication | Summer Storage | Fall Service | Spark Plug Gap |
|---|---|---|---|---|---|---|
| | | | | | | |
| | | | | | | |
| | | | | | | |