FORM NO. 3312-222

TORO®

MODEL NO. 38150 — 4000001 & UP

PARTS CATALOG

826 SNOWTHROWER

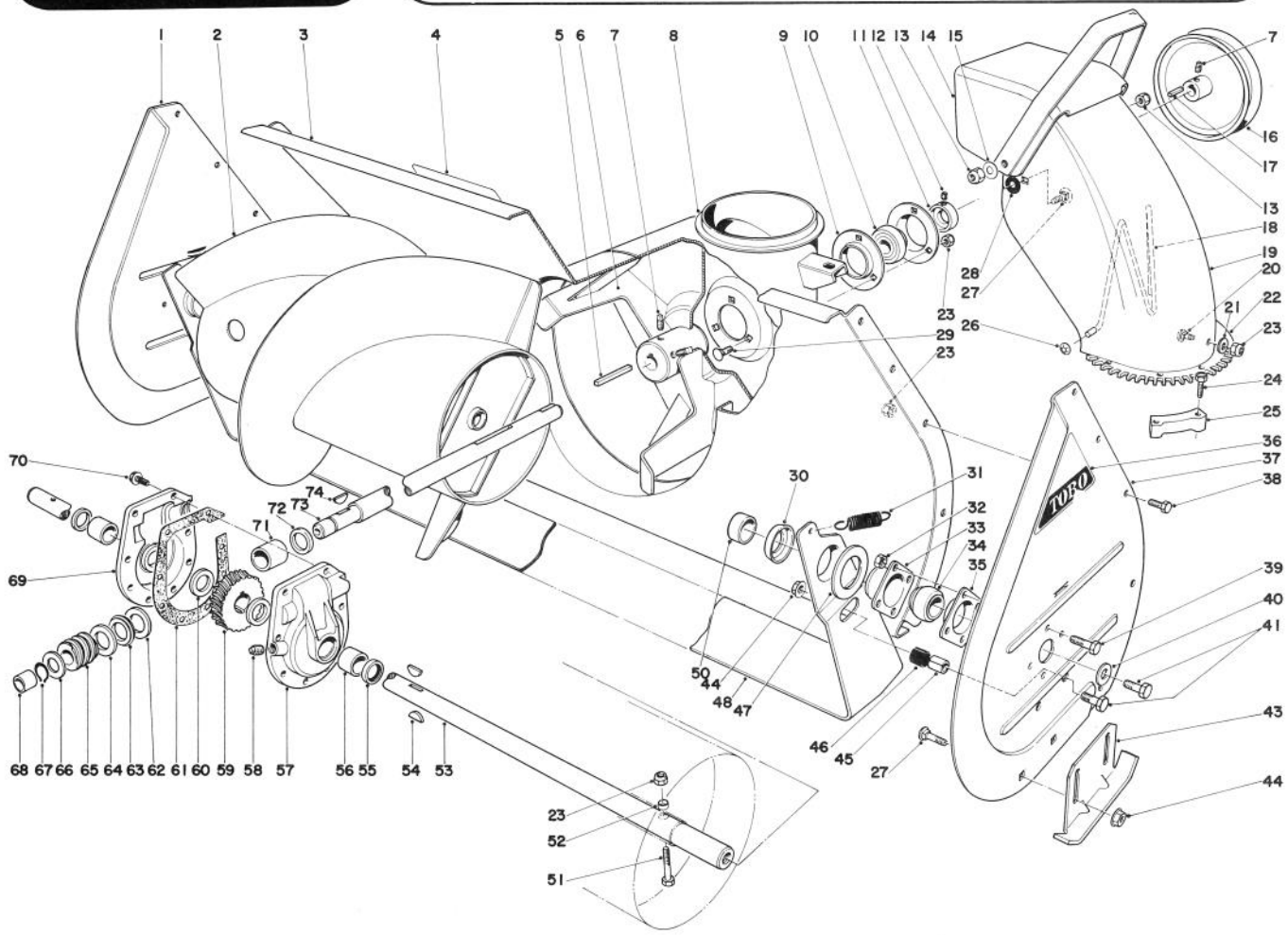

AUGER ASSEMBLY

Ref. No.	Part No.	Description	No. Used
1	39-6120	Sideplate Auger R.H.	1
2	26-6160	Auger R.H.	1
*	26-6170	Auger L.H.	1
3	25-5100	Auger Housing	1
4	29-6350	Decal - Auger Warning	1
5	6-8590	Key - Impeller	1
6	19-8890	Impeller	1
7	3242-4	Set Screw	4
8	25-5170	Chute Ring	1
9	251-229	Bearing Flange	2
10	251-224	Bearing - Impeller	1
11	251-231	Locking Collar	1
12	3245-32	Set Screw	2
13	32152-2	Locknut	2
14	11-7120	Deflector	1

Ref. No.	Part No.	Description	No. Used
15	3290-340	Washer Belleville	2
16	5-7400	Pulley Impeller	1
17	3-6857	Key	1
18	12-2040	Chute Wire	1
19	25-5440	Upper Chute	1
20	3230-18	Carriage Bolt	3
21	3256-23	Washer	3
22	25-5290	Swivel Plate	1
23	3296-29	Locknut	18
24	27-0220	Screw Special	6
25	25-5450	Swivel Block	3
26	3290-326	Pushnut	2
27	3231-27	Carriage Bolt	6
28	20-4320	Washer Rubber	2
29	3230-1	Carriage Bolt	3

*Not Illustrated

COPYRIGHT © ALL RIGHTS RESERVED
The Toro Company — 1983
MINNEAPOLIS, MN 55420 — U.S.A.

PRICE $1.00

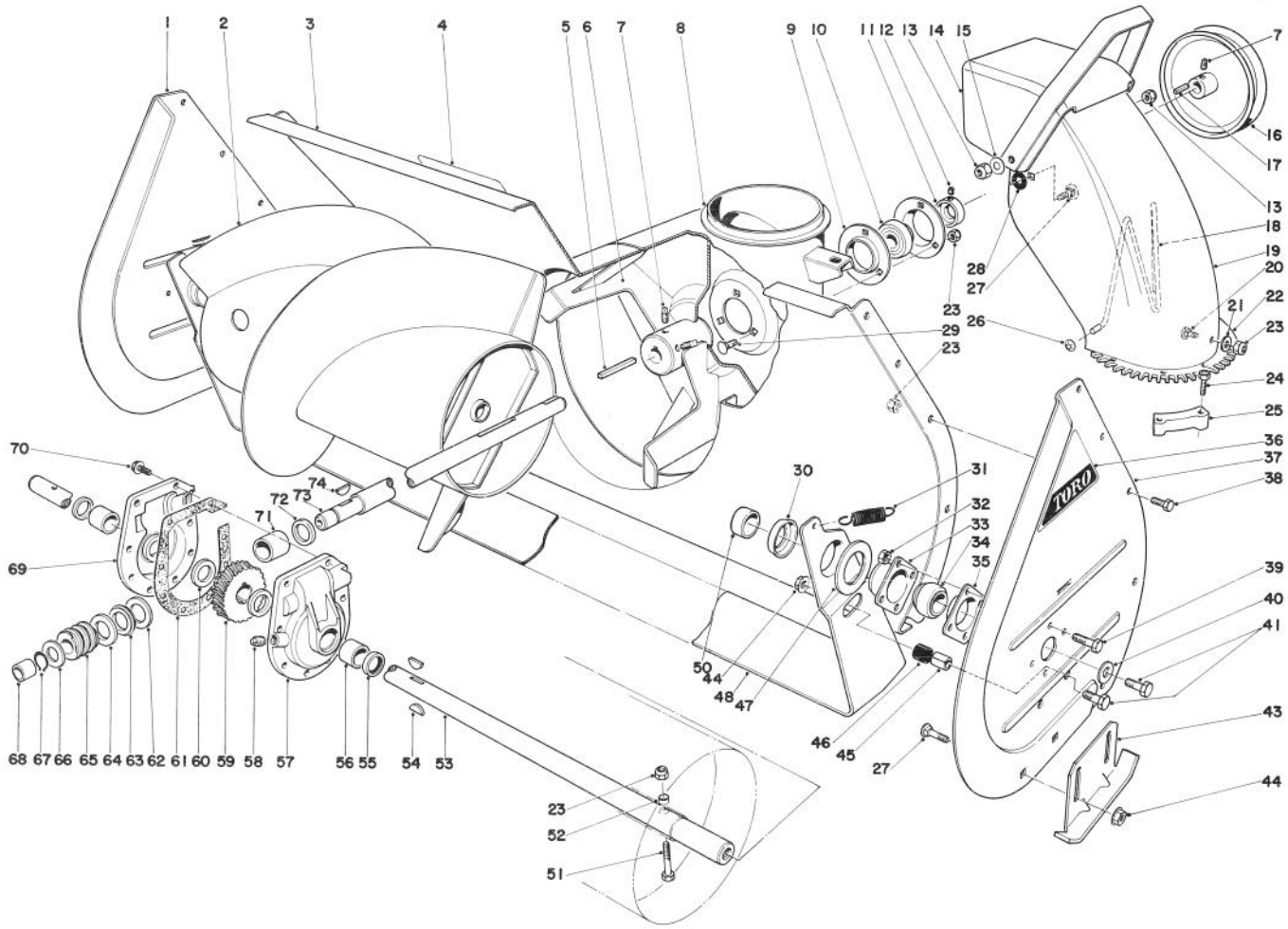

AUGER ASSEMBLY (Continued)

Ref. No.	Part No.	Description	No. Used
30	26-6400	Positioner - Scraper Blade	2
31	5-7290	Spring Scraper	2
32	32152-4	Locknut	8
33	20-0990	Flange Bearing Front	2
34	20-0980	Bearing	2
35	20-1000	Flange Bearing Rear	2
36	17-6500	Decal—Auger Side Plate	2
37	39-6130	Sideplate Auger L.H.	1
38	322-2	Capscrew	10
39	321-3	Capscrew	8
40	3-0750	Flat Washer	2
41	323-6	Capscrew	4
43	20-2840	Auger Skid	2
44	32128-21	Locknut	6
45	25-5140	Standoff - Scraper Stop	2
46	25-5150	Bumper - Scraper Stop	2
47	20-0300	Spacer - Scraper Blade	2
48	19-9140	Scraper Blade	1
50	26-6390	Spacer Auger	2
51	17-7030	Bolt Auger	2
52	25-5090	Spacer Auger Hub	2
53	11-7000	Shaft Auger	1
54	3257-33	Key Woodruff	2
55	7-0045	Oil Seal	2

Ref. No.	Part No.	Description	No. Used
56	256-237	Bushing	2
57	37-8860	Gear Case L.H. (Incl. Ref. #55-56)	1
58	281-1	Pipe Plug	1
59	5-7180	Gear Worm	1
60	252-71	Thrust Bearing	2
61	40-8330	Gasket	1
62	252-78	Thrust Washer	1
63	252-76	Thrust Bearing	1
64	252-77	Thrust Washer	1
65	5-7170	Worm	1
66	3-8664	Thrust Washer	1
67	32120-72	Retaining Ring	1
68	256-32	Bushing	1
69	37-8850	Gear Case R.H. (Incl. Ref. #55-56)	1
70	32144-41	Thread Forming Screw	8
71	20-3210	Bushing	1
72	237-87	Seal	1
73	19-8540	Shaft Impeller	1
74	3257-23	Key Woodruff	1
*	19-6990	Gear Case Assembly Complete (Incl. Ref. #53-74)	1
†	20-0640	Drift Storage Bar	1

*Not Illustrated
†Optional Equipment

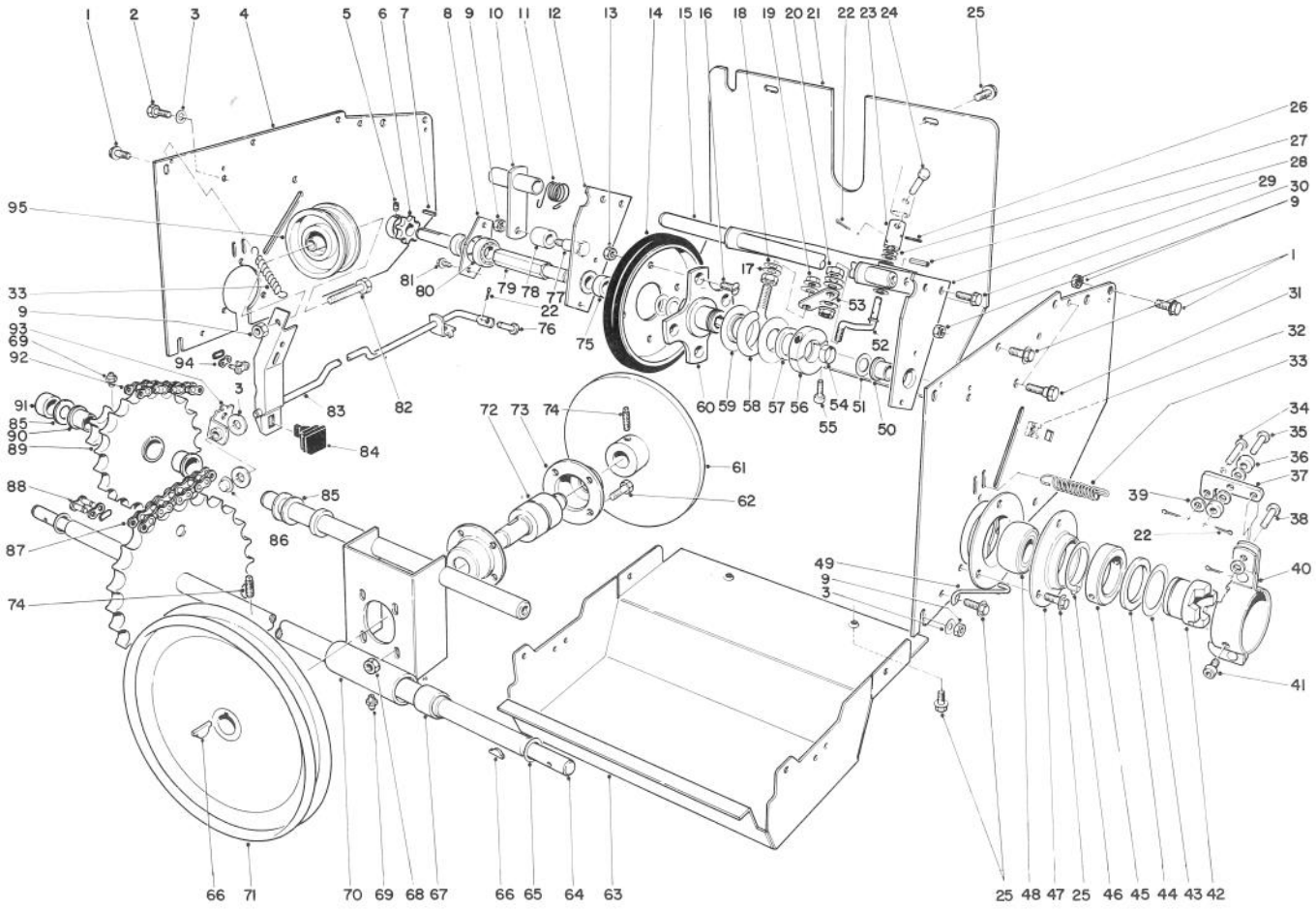

TRACTION ASSEMBLY

Ref. No.	Part No.	Description	No. Used
1	323-6	Capscrew	7
2	32144-15	Hex Thread Forming Screw	2
3	3256-25	Washer	5
4	22-7990	Side Plate Drive	2
5	3245-32	Set Screw	2
6	5-9820	Sprocket	1
7	3-6168	Square Key	1
8	22-8950	Bearing Cup	1
9	32146-2	Hex Locknut	11
10	26-6470	Chain Tensioning Arm	1
11	26-8950	Spring – Chain Tensioner	1
12	26-6070	Mount – Hex Shaft R.H.	1
13	32146-5	Locknut	4
14	40-8170	Disc Assembly	1
15	11-8010	Bracket – Dead Shaft	1
16	32108-94	Screw – Flat Head	4
17	3256-45	Washer	2
18	3290-301	Spring Washer	4
19	32128-12	Flange Nut	2
20	32146-6	Locknut	2
21	8-7950	Rear Shield	1
22	3272-5	Cotter Pin	8
23	11-8070	Tube – "U" Joint	1
24	283-31	Clevis Pin	1
25	32144-10	Screw – Thread Forming	14
26	32121-50	Roll Pin	2
27	252-89	Thrust Washer	3
28	32121-11	Roll Pin	2

Ref. No.	Part No.	Description	No. Used
29	26-6330	Hex Shaft Mounting (Incl. Ref. #50)	1
30	32144-11	Screw – Thread Forming	4
31	11-8140	Shoulder Screw	4
32	3290-433	Retained Nut	2
33	10-3890	Spring – Extension	3
34	283-29	Clevis Pin	2
35	283-17	Clevis Pin	2
36	10-3910	Roller – Clutch	4
37	20-1050	Arm – Clutch Cam	2
38	283-16	Clevis Pin	2
39	3256-14	Washer	10
40	20-2290	Clutch Mounting Bracket	2
41	3274-42	Hex Socket Capscrew	4
42	26-5990	Wheel Clutch	2
43	10-3980	Thrust Washer	2
44	256-214	Thrust Bearing	2
45	10-3860	Collar – Clutch Mounting	2
46	32151-35	Ring – Retainer	2
47	20-1020	Bearing Flange	4
48	20-1010	Bearing Axle	2
49	41-8570	Retainer – Clutch	2
50	256-219	Bushing	1
51	5-7570	Washer – Friction Wheel Shaft	3
52	11-8090	Rod – Connecting	1
53	11-8060	Pivot – Shift Rod	1
54	11-3180	Spacer – Split	1
55	3274-26	Hex Socket Capscrew	2

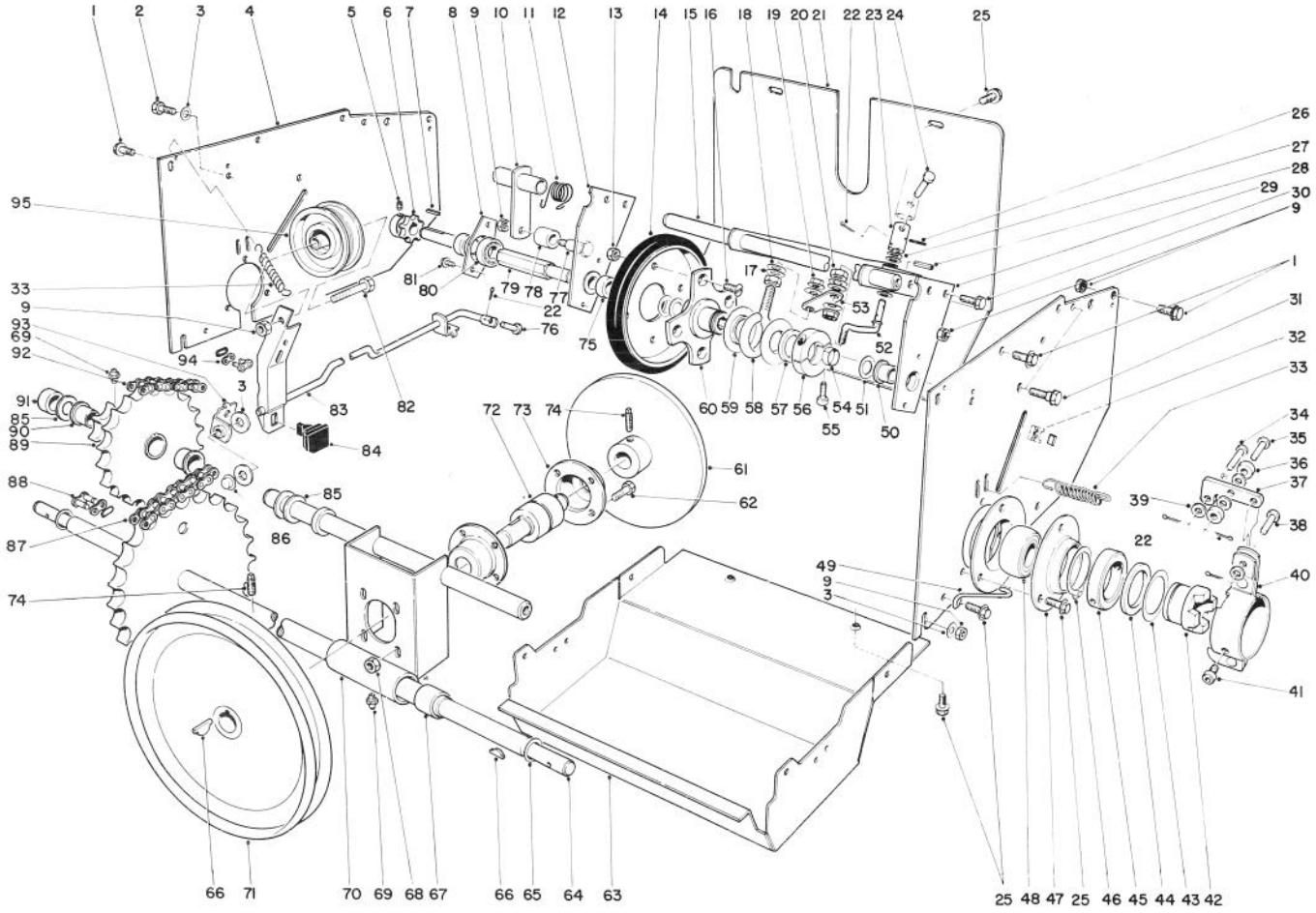

TRACTION ASSEMBLY (Continued)

Ref. No.	Part No.	Description	No. Used
56	20-4610	Collar	1
57	252-71	Thrust Bearing	1
58	11-8050	Slider Ring Collar	1
59	11-8080	Ring – Slider	2
60	20-3310	Hub – Traction Disc	1
61	23-4970	Friction Plate	1
62	322-3	Capscrew	4
63	11-7140	Shield – Lower	1
64	26-5950	Axle Shaft	1
65	3-0737	Thrust Washer	2
66	3257-23	Key – Hi Pro	6
67	256-232	Bushing	2
68	32149-1	Locknut	4
69	302-5	Grease Fitting	2
70	25-5190	Bulkhead (Incl. Ref. #67)	1
71	5-7410	Pulley – Drive	1
72	23-4950	Friction Plate Shaft	1
73	10-0070	Bearing Housing	2
74	3242-4	Set Screw	4
75	22-9190	Spacer	2
76	283-6	Clevis Pin	1
77	7-0846	Shoulder Bolt	1

Ref. No.	Part No.	Description	No. Used
78	26-8940	Roller – Chain Tensioner	1
79	11-8940	Shaft – Friction Wheel	1
80	251-260	Bearing	1
81	12-3270	Hex Washer Head Thread Forming Screw	2
82	323-8	Capscrew	1
83	8-9139	Auger Brake Assembly (Incl. Ref. #84)	1
84	40-8140	Brake Pad – Molded	1
85	3-8664	Thrust Washer	3
86	3290-383	Pushnut	1
87	23-7260	Lower Chain	1
88	2710-11	Connecting Link	1
89	8-8709	Sprocket (Incl. Ref. #69 & 90)	1
90	256-215	Bushing	2
91	23-7250	Spacer	1
92	5-9430	Upper Chain	1
93	20-2940	Bracket – Clutch Rod	1
94	2710-6	Connecting Link	1
95	3-4244	Pulley – Idler	1
*	8-8419	Loose Parts	1

*Not Illustrated

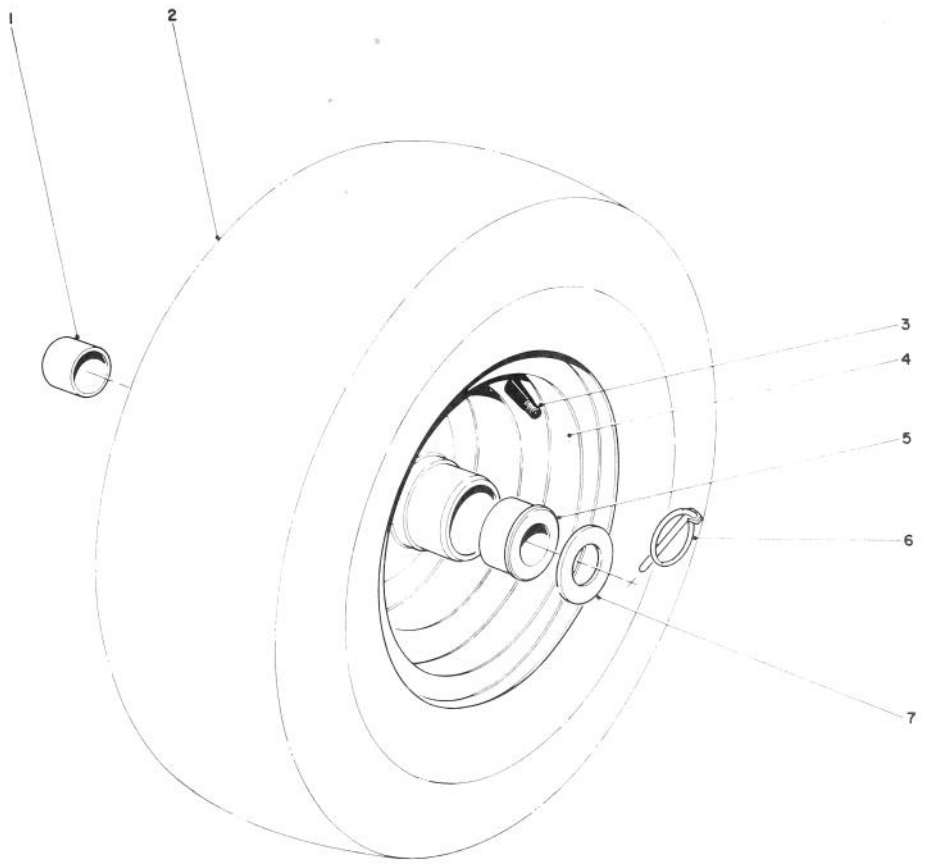

WHEEL ASSEMBLY

Ref. No.	Part No.	Description	No. Used
1	256-205	Bushing	2
2	231-92	Tire	2
3	232-27	Valve Stem	2
4	26-9880	Wheel & Hub Assembly (Incl. Ref. # 1 & 5)	2

Ref. No.	Part No.	Description	No. Used
5	256-117	Wheel Bushing	2
6	3290-243	Klip Pin	2
7	3-8664	Thrust Washer	2
†	23-2340	Tire Chain Optional (Set of 2)	1

†Optional Equipment

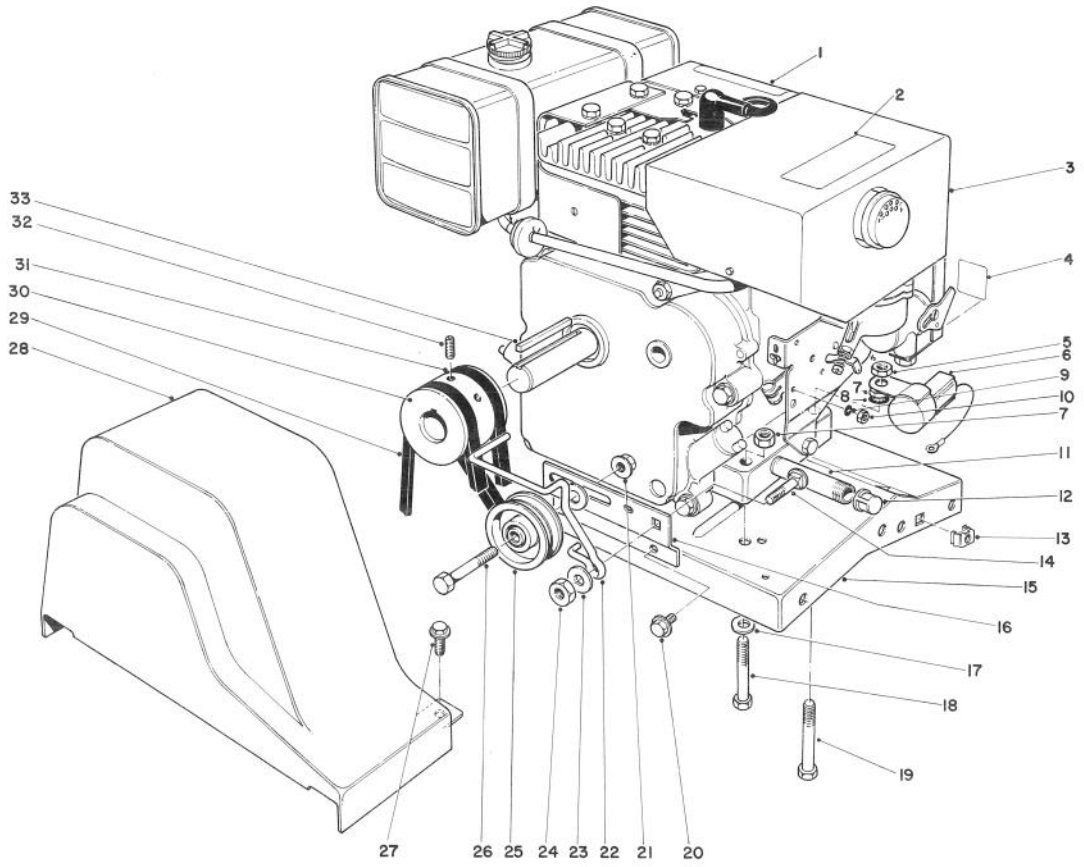

ENGINE ASSEMBLY

Ref. No.	Part No.	Description	No. Used
1	41-8540	Decal — Hazards Caution	1
2	29-6390	Decal — Hot Surface Warning	1
3	221-758	Engine	1
4	29-6400	Decal — Choke	1
5	32153-3	Locknut	1
6	41-8610	Interlock Module	1
7	3296-29	Locknut	4
8	3254-2	Int. Tooth Lockwasher	1
9	3254-10	Int. Tooth Lockwasher	1
10	3296-1	Locknut	1
11	289-20	Pipe Nipple	1
12	288-4	Pipe Cap	1
13	3290-433	Retained Nut	2
14	3231-27	Carriage Bolt	1
15	22-9030	Engine Base	1
16	41-8580	Bracket — Belt Idler	1
17	3256-23	Washer	4
18	322-9	Capscrew	3

Ref. No.	Part No.	Description	No. Used
19	322-10	Hex. Hd. Capscrew	1
20	32144-15	Hex Forming Screw	2
21	3290-357	Locknut	1
22	41-8590	Belt Guide	1
23	3256-24	Washer	2
24	32146-2	Locknut	1
25	244-63	Idler Pulley	1
26	323-8	Capscrew	1
27	32144-10	Self Tapping Screw	2
28	17-6550	Belt Guard	1
29	26-9670	V-Belt, Auger	1
30	21-4100	Engine Pulley	1
31	17-6540	V-Belt, Traction	1
32	3246-14	Set Screw	2
33	5-0930	Key	1
*	25-9150	Decal — Replacement Serial Plate	1

*Not Illustrated

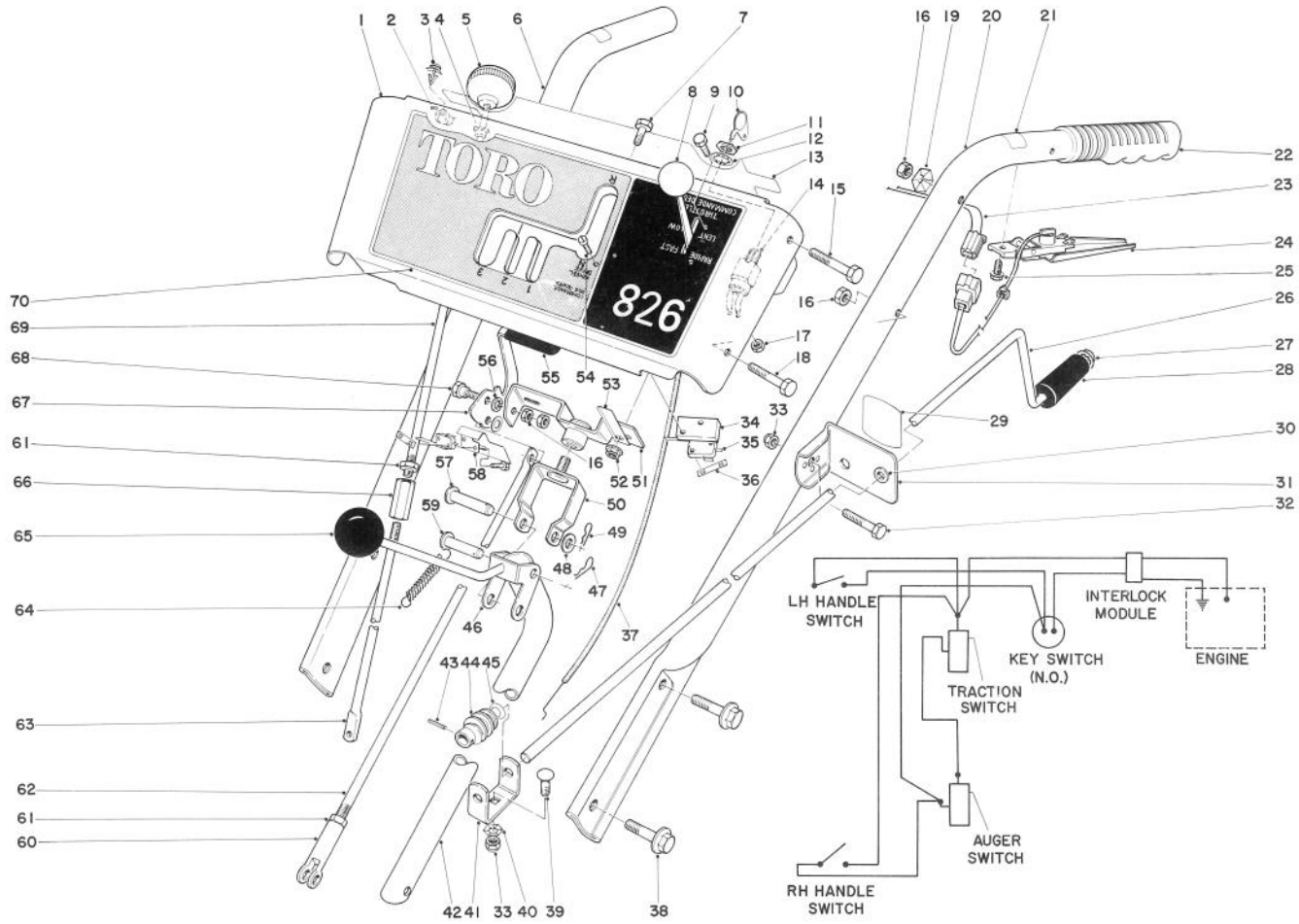

HANDLE ASSEMBLY

Ref. No.	Part No.	Description	No. Used
1	8-1559	Escutcheon Plate (Inc. Ref. #13 & 70)	1
2	43-7450	Clamp – Wire	2
3	43-7460	Mounting Stud	2
4	256-240	Nyliner	2
5	233-10	Knob	2
6	40-8460	Handle – Right	1
7	321-3	Capscrew	2
8	233-36	Knob	1
9	32140-99	Hex Head Screw	2
10	33-2010	Keys	2
11	218-461	Hex Nut	1
12	3254-5	Lockwasher	1
13	29-6330	Decal – Escutcheon Back	1
14	40-8240	Key Switch	1
15	321-11	Capscrew	2
16	32152-4	Locknut	8
17	32146-18	Locknut	2
18	321-9	Capscrew	2
19	3290-257	Washer Pyramidal	2
20	40-8450	Handle – Left	1
21	29-6360	Decal – Safety Interlock	2
22	6-0450	Handle Grip	2

Ref. No.	Part No.	Description	No. Used
23	40-8640	Wire Harness	1
24	40-9690	Interlock Handle & Switch	2
25	12-3270	Hex Washer Head Thread Forming Screw	2
26	41-8640	Rod – Chute Control	1
27	3290-320	Push-on Speed Nut	1
28	40-8230	Chute Control Grip	1
29	29-6370	Decal – Chute Direction	1
30	256-249	Nyliner	1
31	6-3069	Bracket – Chute Control Mtg. (Incl. Ref. #29 & 30)	1
32	322-9	Capscrew	1
33	3296-29	Locknut	2
34	22-7950	Pad – Switch Mounting	1
35	40-8200	Micro Switch	2
36	3290-354	Speed Nut	2
37	8-7790	Throttle Control	1
38	3234-1	Flange Screw	4
39	3230-2	Carriage Bolt	1
40	3290-238	Pyramidal Washer	1
41	11-7110	Bracket – Worm	1
42	29-6450	Rod – Traction Shift	1
43	32121-50	Roll Pin	1

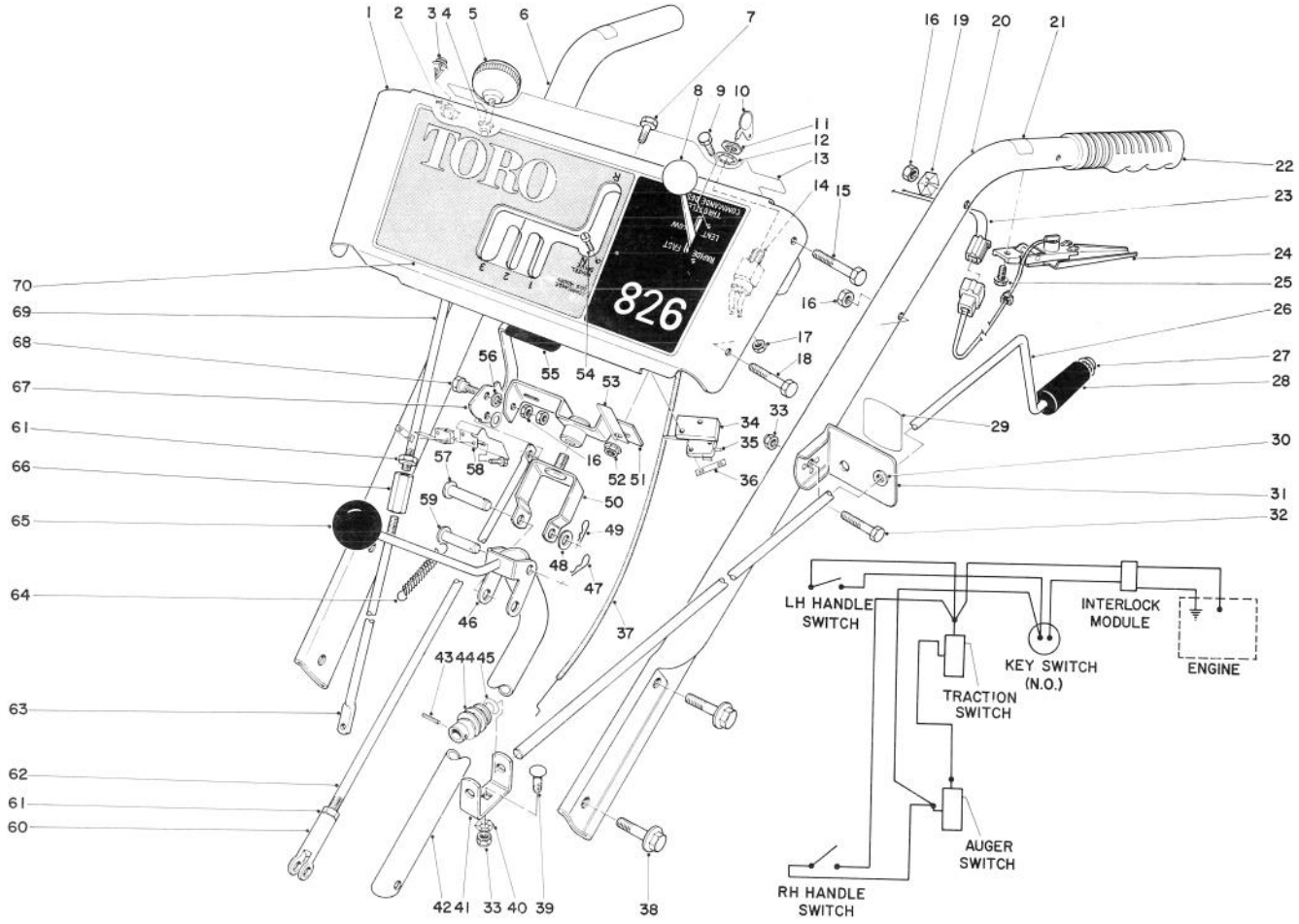

HANDLE ASSEMBLY (Continued)

Ref. No.	Part No.	Description	No. Used
44	8-8600	Worm Gear – Chute	1
45	3290-212	Spring Washer	1
46	26-9370	Shift Rod	1
47	3290-307	Hair Pin Cotter	1
48	3256-6	Washer	1
49	3290-322	Hair Pin Cotter	1
50	29-6490	Pivot Bracket	1
51	8-7930	Swivel Block	1
52	32128-10	Flange Locknut	2
53	26-9410	Retainer – Wire	1
54	3290-313	Machine Screw	4
55	11-8970	Grip – Auger Handle	1
56	3256-23	Washer	2
57	283-5	Clevis Pin	1

Ref. No.	Part No.	Description	No. Used
58	22-9300	Bracket – Switch	1
59	283-15	Clevis Pin	1
60	39-4640	Clevis	1
61	3220-3	Jam Nut	3
62	29-6460	Drag Link	1
63	22-7970	Rod – Wheel Clutch, Lower	2
64	8-9900	Spring – Control Rod	1
65	233-21	Knob	1
66	22-7940	Coupling – Wheel Clutch Rod	2
67	17-6620	Handle – Auger Clutch	1
68	11-9030	Shoulder Bolt	2
69	29-6470	Rod – Wheel Clutch	2
70	29-6310	Decal – Escutcheon	1
*	3290-378	Cable Tie	2

*Not Illustrated

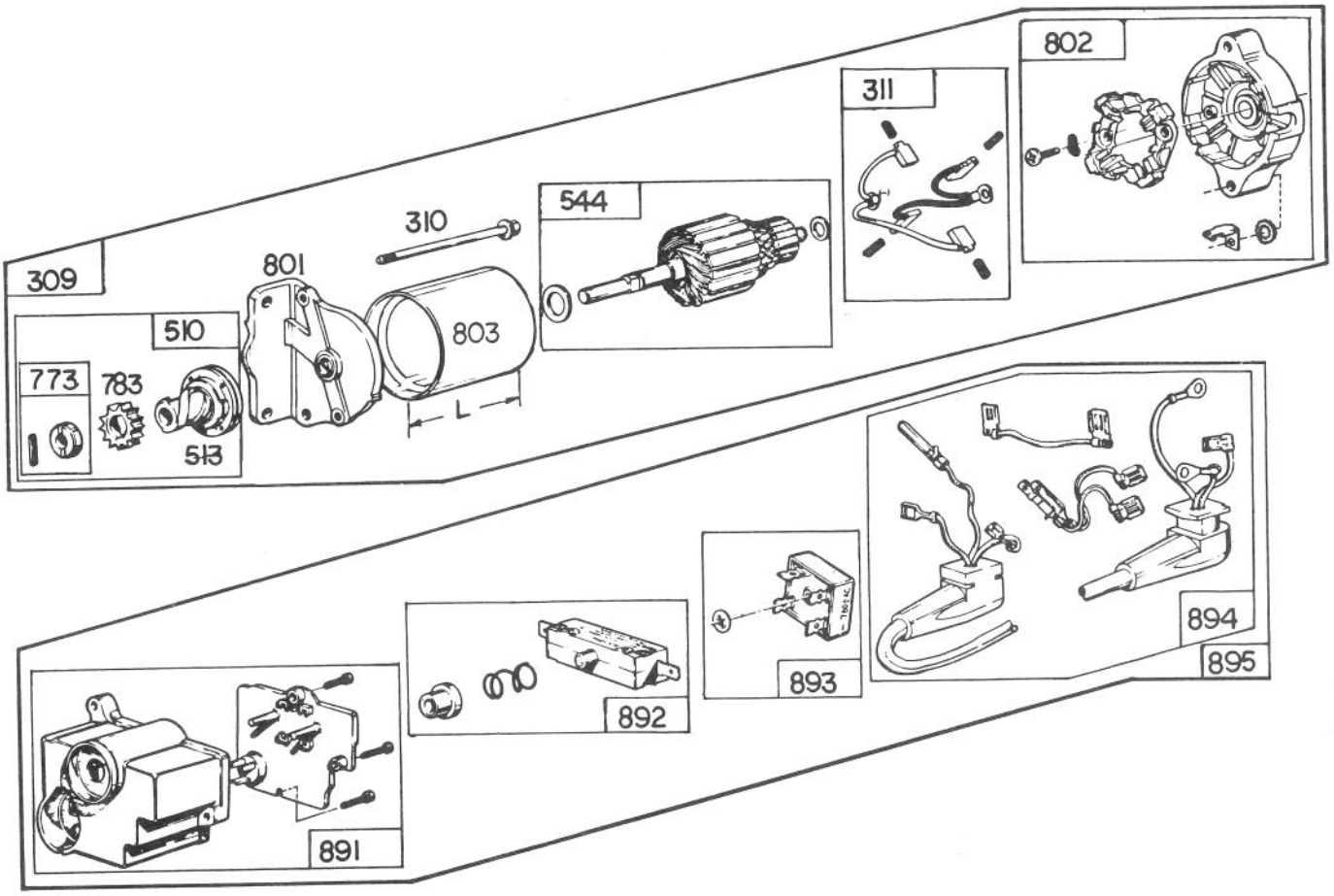

STARTER MOTOR KIT MODEL NO. 37-4630 (Optional)

Ref. No.	Part No.	Description	No. Used
309	393851	Motor & Drive Assembly	1
310	93889	Thru Bolt Assembly	1
311	393612	Brush Assembly	1
510	391461	Drive Assembly (Incl. Ref. 513, 773 & 783)	1
513	391135	Clutch Assembly	1
544	393607	Armature Assembly	1
773	391462	Retainer & Pin	1
783	280104	Gear	1
801	393228	Drive End Cap Assembly	1

Ref. No.	Part No.	Description	No. Used
802	393833	Comm. End Cap Assembly	1
803	393433	Housing Assembly	1
891	393705	Housing Group	1
892	393708	Switch Group	1
893	393707	Rectifier	1
894	393706	Lead Group	1
895	393486	Control Group	1
*†	38-0070	Bracket Switch	1
*†	32146-18	Nut	3
*†	3252-6	Fillister Hd. Machine Screw	3

*Not Illustrated

†Obtain from The Toro Co.

Note: Obtain replacement parts from your local Briggs & Stratton Dealer.

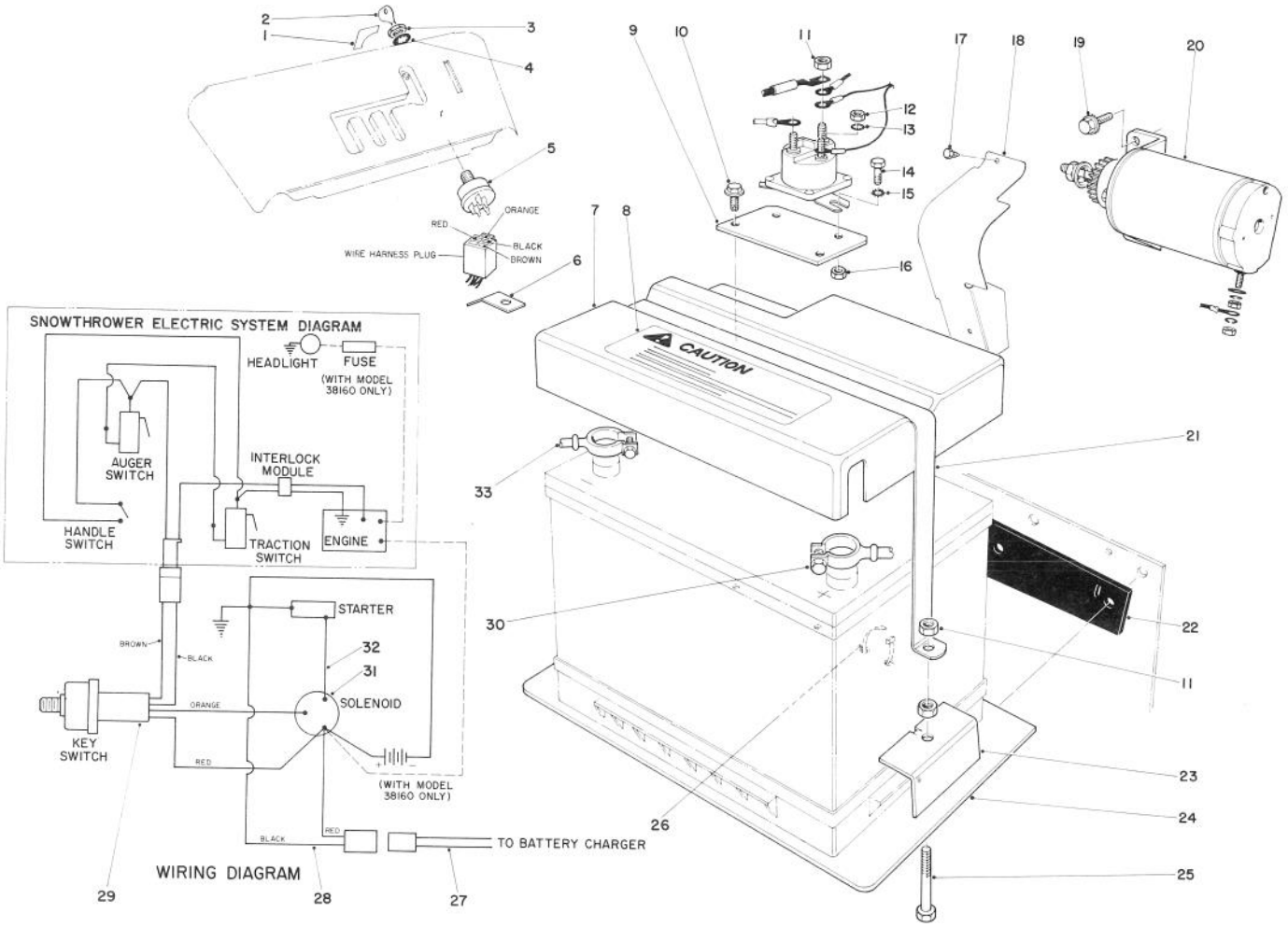

12 VOLT STARTING MOTOR KIT 42-3370 (Optional)

Ref. No.	Part No.	Description	No. Used
1	38-0640	Decal—Key Switch	1
2	33-2010	Key (Set of 2)	1
3	218-461	Hex Nut	1
4	3254-5	Lockwasher	1
5	42-3990	Starter Switch	1
6	22-9060	Bracket Wire Clamp	1
7	8-2839	Battery Cover (Incl. Ref. #8)	1
8	38-0630	Decal - Caution	1
9	22-8880	Solenoid Mounting Bracket	1
10	32144-10	Thread Forming Screw	2
11	3217-6	Hex Nut	6
12	3219-14	Hex Nut	1
13	3254-1	Lockwasher	1
14	321-2	Capscrew	2
15	3255-7	Lockwasher	2
16	3296-42	Locknut	2
17	32108-57	Self Tapping Screw	2
18	20-7060	Pinion Shield	1

Ref. No.	Part No.	Description	No. Used
19	32140-45	Hex Hd. Screw	2
20†		Starter Motor & Pinion Assy.	1
21	22-8850	Strap Battery Cover	1
22	24-6150	Battery Isolation Pad	1
23	22-8870	Battery Hold Downs	2
24	22-8830	Battery Mounting Plate	1
25	322-10	Capscrew	2
26	3290-378	Tie Wrap	5
27	29-7830	Wire Assembly	1
28	29-7820	Wire Assembly	1
29	42-4000	Wire Harness	1
30	22-9320	Battery Cable	1
31	6-1600	Solenoid	1
32	22-9310	Wire Assembly	1
33	22-9330	Battery Cable	1
*	26-3870	Charger 110V (U.S. & Canada)	1
*	26-7140	Charger 220V (Europe)	1

*Not illustrated; is not included with kit.

†Not available from The Toro Co.; for reference only.
Obtain from your local Briggs & Stratton dealer part no. 394806.

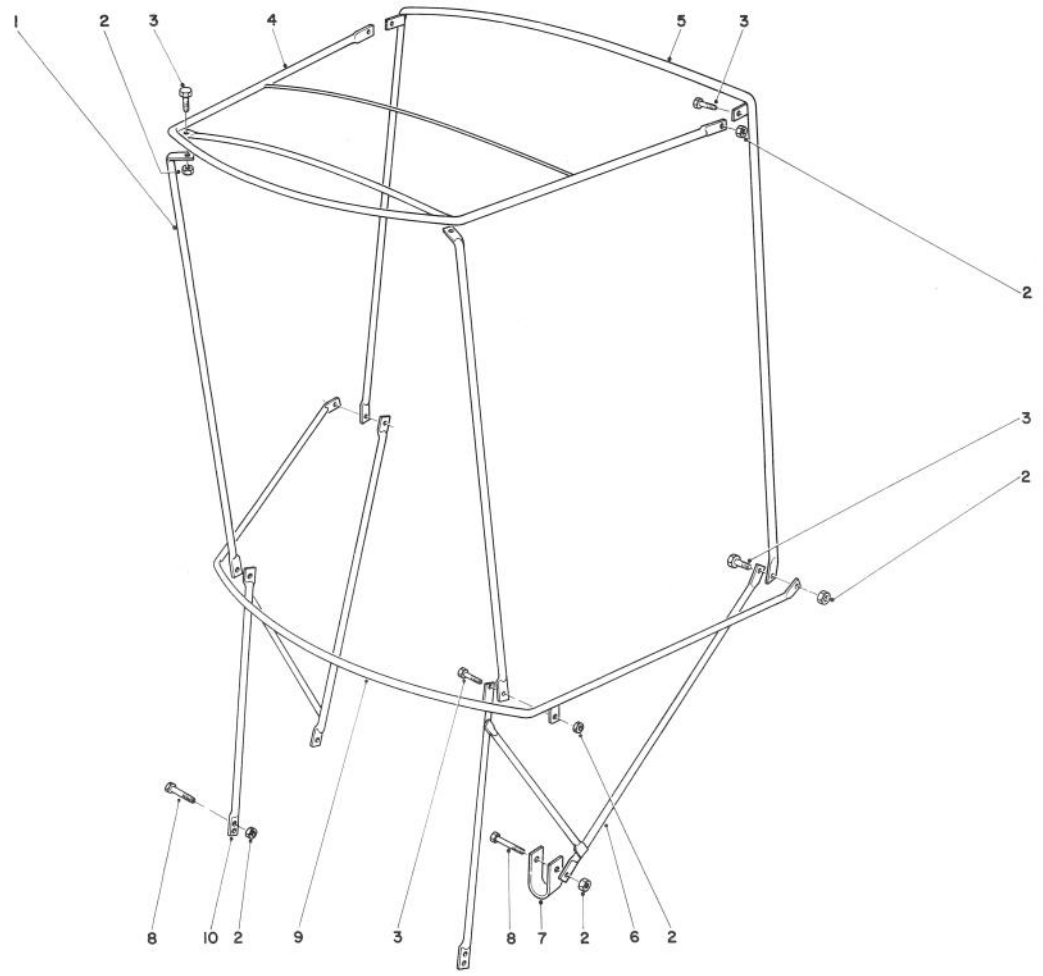

SNOW CAB ASSEMBLY MODEL 42-3380 (Optional)

Ref. No.	Part No.	Description	No. Used
1	12-8040	Front Corner Post	2
2	32153-4	Locknut	12
3	321-4	Capscrew	8
4	12-8010	Top Frame	1
5	12-8030	Rear Vertical Bow	1
6	42-4060	Attaching Bracket L.H.	1

Ref. No.	Part No.	Description	No. Used
7	12-8050	"U" Clamp	2
8	321-11	Capscrew	4
9	12-8020	Horizontal Curved Bow	1
10	42-4050	Attaching Bracket R.H.	1
*	42-4070	Vinyl Cover	1

*Not Illustrated

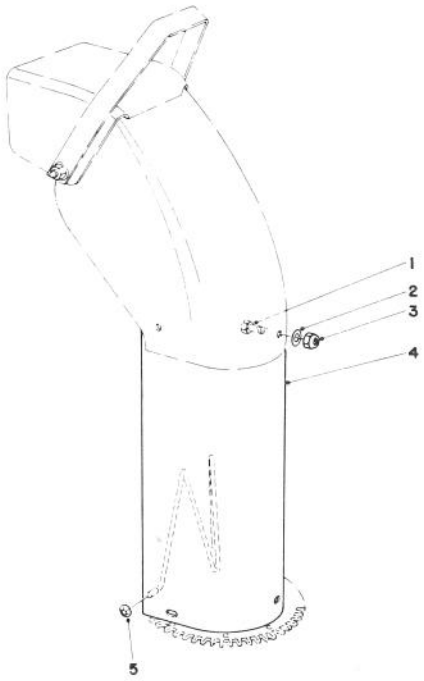

CHUTE EXTENSION KIT 26-1100 (Optional)

Ref. No.	Part No.	Description	No. Used
1	322-2	Hex Hd. Capscrew	6
2	3256-23	Washer	6
3	32152-1	Locknut	6

Ref. No.	Part No.	Description	No. Used
4†		Upper Chute Extender	1
5	3290-326	Pushnuts	2

†Not available, for reference only.

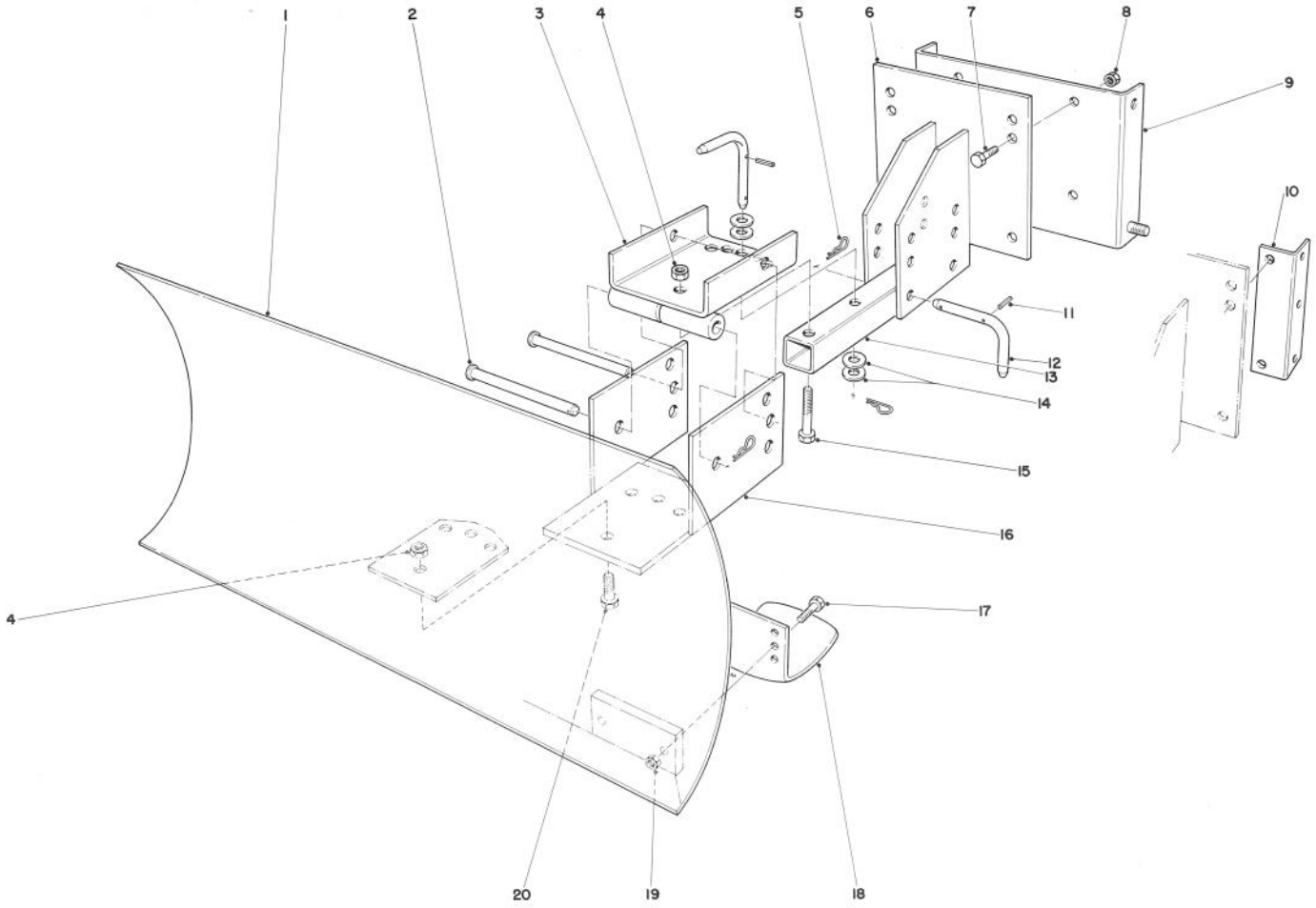

GRADER BLADE ASSEMBLY MODEL NO. 59099 (Optional)

Ref. No.	Part No.	Description	No. Used
1	7-4374	Blade	1
2	283-38	Pin	2
3	20-5090	Swivel Bracket	1
4	32152-3	Locknut	5
5	3290-322	Hair Pin Cotter	5
6	20-5170	Mounting Plate	1
7	323-6	Capscrew	4
8	32152-2	Locknut	4
9	22-4920	Mounting Plate Bracket (used with 826 and 1132 only)	1
10	39-7850	Mounting Rail (used with 3521, 421 & 521 units only)	2

Ref. No.	Part No.	Description	No. Used
11	32121-45	Roll Pin	3
12	20-5210	Pivot Pin (Incl. Ref. #11)	3
13	20-5140	Blade Tongue	1
14	3256-5	Flat Washer	4
15	325-11	Capscrew	1
16	20-5130	Blade Adjustment Plate	1
17	322-6	Capscrew	4
18	7-1023	Skid	2
19	32152-1	Locknut	4
20	325-5	Capscrew	4
*	20-9960	Air Cleaner Kit (B & S)	1

*Not Illustrated

ENGINE BRIGGS & STRATTON MODEL NO. 190402-2720-01

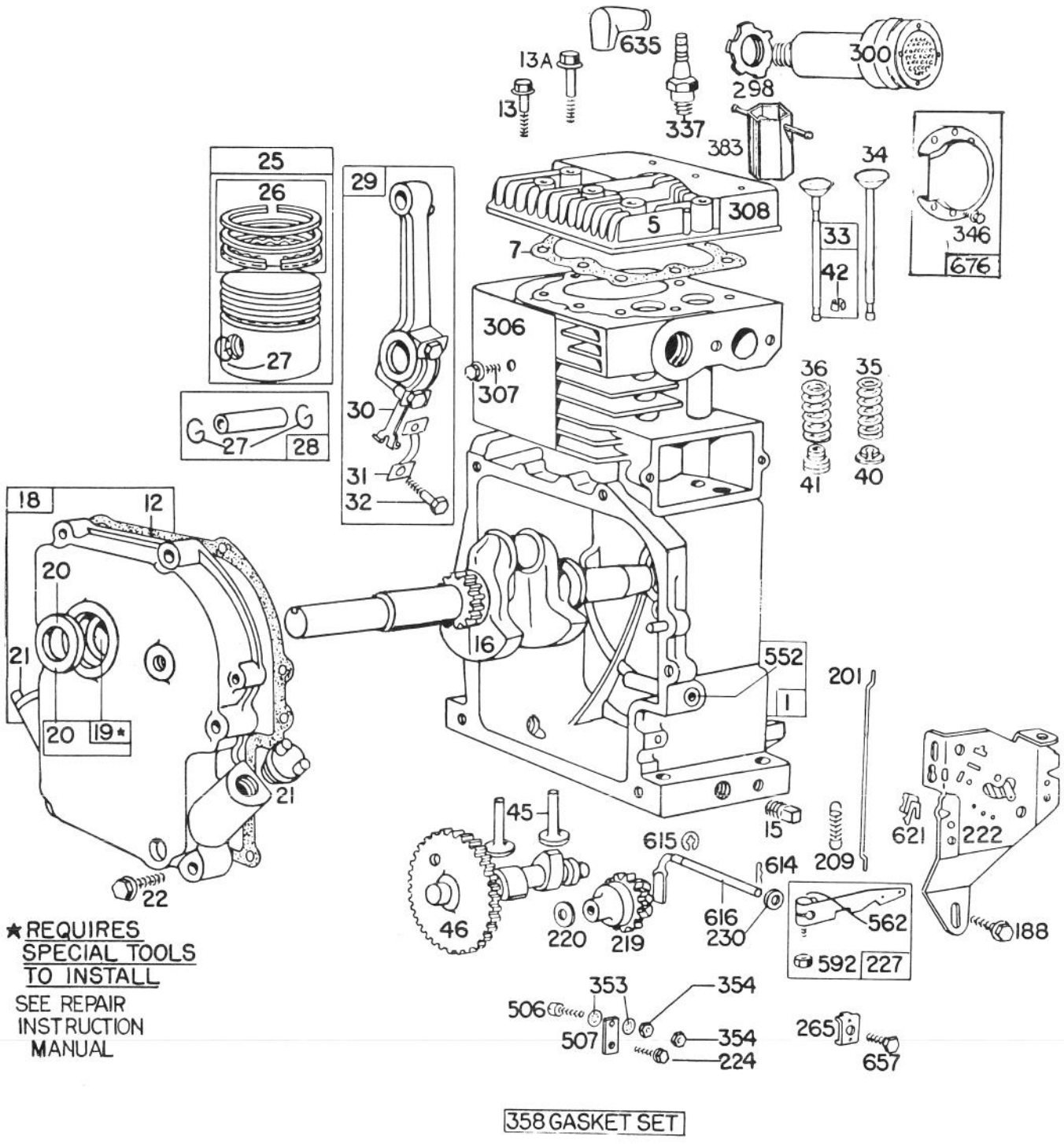

ENGINE BRIGGS & STRATTON MODEL NO. 190402-2720-01

Ref. No.	Part No.	Description	No. Used
1	396178	Cylinder Assembly	1
5	211778	Head – Cylinder	1
7	*270430	Gasket – Cylinder Hd.	1
12	*27750	Gasket – Crankcase Cover – 1/64" thick	1
	*27876	Gasket – Crankcase Cover – .005" thick	1
	*27877	Gasket – Crankcase Cover – .009" thick	1
13	93211	Screw – Cylinder Head (2-21/32" long)	3
13A	93113	Screw – Cylinder Head (2-5/16" long)	1
15	91084	Plug – Oil Drain	1
16	261077	Crankshaft	1
18	299167	Cover Assembly – Crankcase	1
19	295964	Bushing – Crankcase Cover **Note:** Requires special tools for installation.	1
20	391086	Seal – Oil	1
21	66768	Plug – Oil Filler	1
22	93585	Screw – Crankcase Cover Mounting	1
25	391673	Piston Assembly – Standard	1
	391674	Piston Assembly – .010" O.S.	1
	391675	Piston Assembly – .020" O.S.	1
	391676	Piston Assembly – .030" O.S.	1
		PISTON RING SETS: **Note:** For Chrome Ring Set – Standard Size – Order No. 299743.	
26	391669	Ring Set – Piston – Standard	1
	391670	Ring Set – Piston – .010" O.S.	1
	391671	Ring Set – Piston – .020" O.S.	1
	391672	Ring Set – Piston – .030" O.S.	1
27	68546	Lock – Piston Pin	1
28	295840	Pin Assembly – Piston – Std.	1
	295841	Pin Assembly – Piston – .005" O.S.	1
29	390401	Rod Assembly – Connecting **Note:** For Connecting Rod with .020" undersize Crankpin Bore – Order No. 390773.	1
30	222113	Dipper – Connecting Rod	1
31	222114	Lock – Connecting Rod Screw	1
32	92659	Screw – Connecting Rod	1
33	390419	Valve – Exhaust	1
34	261055	Valve – Intake	1
35	65906	Spring – Intake Valve	1
36	26828	Spring – Exhaust Valve	1
40	221596	Retainer – Intake Valve	1
41	292260	Rotocoil – Exhaust Valve	1
42	93630	Retainer – Exhaust Valve Rotocoil	2
45	260933	Tappet – Valve	1
46	211689	Gear – Cam	1
188	93535	Screw	1
201	260872	Link – Governor	1
209	261126	Spring – Gov.	1
219	391737	Gear – Governor	1
220	221551	Washer – Thrust	1
222	390670	Plate – Gov. Control	1
224	93067	Screw	1
227	391965	Lever Assembly – Governor	1
230	222450	Washer – Governor Crank	1
265	221535	Clamp – Casing **Note:** 220680 Washer – Flat Used between Clamp and Insulator	1
298	261409	Locknut – Muffler	1
300	393010	Muffler – Exhaust	1
306	222830	Shield – Cylinder	1
307	93163	Screw – Cylinder Shield Mtg.	1
308	221901	Cover – Cylinder Head	1
337	293918	Plug – Spark (1-1/2" high – 37 M.M.) (Resistor Type)	1
346	93705	Screw	1
353	92791	Washer – Lock Shakeproof	3
354	90576	Nut – Hex.	2
358	299577	Gasket Set	1
383	89838	Wrench – Spark Plug	1
506	90200	Screw – Machine Fill. Hd.	1
507	66895	Insulator	1
552	231056	Bushing – Governor Crank	1
562	92613	Bolt – Governor Lever	1
592	231082	Nut – Hex.	1
614	93306	Cotter – Hair Pin	1
615	93307	Retainer – E-Ring	1
616	231057	Crank – Governor	1
621	297472	Switch – Stop	1
635	66538	Elbow – Spark Plug	1
657	93496	Screw	1
676	393757	Deflector – Exhaust	1

*Included in Gasket Set – Part No. 299577.

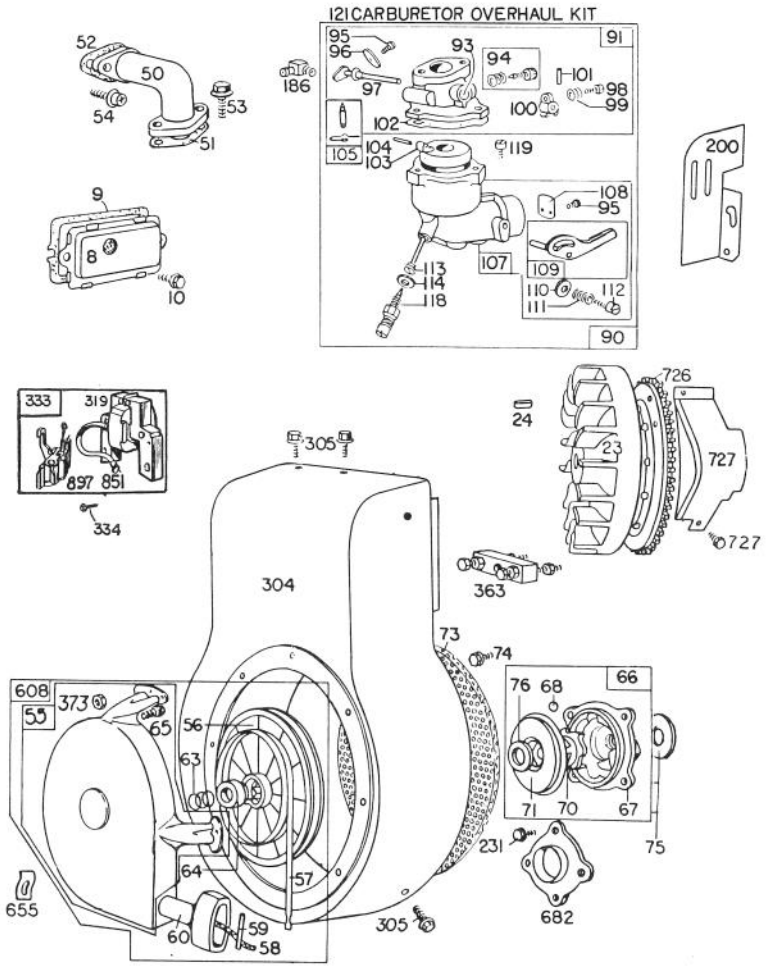

ENGINE BRIGGS & STRATTON MODEL NO. 190402-2720-01 (Continued)

Ref. No.	Part No.	Description	No. Used
8	390321	Breather Assembly	1
9	*27803	Gasket – Valve Cover	1
10	93394	Screw	1
23	392034	Flywheel and Ring Gear Assy. – Magneto	1
24	222698	Key – Flywheel	1
50	212478	Elbow – Intake	1
51	*270684	Gasket – Carb. Mtg.	1
52	*27828	Gasket – Intake Elbow Mtg.	1
53	93357	Screw – Carburetor Mtg.	1
54	93208	Screw – Intake Elbow Mtg.	1
55	393576	Housing – Rewind Starter	1
56	295871	Pulley – Rewind Starter **Note:** Includes 63" Rope	1
57	294303	Spring – Rewind Starter	1
58	66884	Rope – Rewind Starter – 63" Long	1
59	230228	Pin – Starter Grip	1
60	66728	Grip – Starter Rope	1
63	260414	Spring – Ratchet	1
64	230543	Adapter – Ratchet Spring	1
65	93067	Screw – Stamped Steel Rewind Starter Housing Mounting	1

Ref. No.	Part No.	Description	No. Used
66	394558	Clutch Assy. – Rewind Starter	1
67	394897	Housing – Rewind Starter Clutch	1
68	63770	Ball – Clutch	1
70	298799	Ratchet – Rewind Starter Clutch	1
71	221653	Washer – Retainer	1
73	221796	Screen – Rewind Starter	1
74	93042	Screw	1
75	220865	Washer – Spring	1
76	68238	Washer – Ratchet Sealing	1
90	391889	Carburetor Assembly	1
91	390404	Body Assembly – Upper Carburetor	1
93	23108	Bushing – Throttle Shaft	1
94	†292681	Valve Assembly – Carburetor Idle	1
95	93499	Screw – Throttle and Choke Valve Mtg.	1
96	62940	Valve – Throttle	1
97	298826	Shaft and Lever – Throttle	1
98	91920	Screw – Machine, Fil. Hd. –	1

*Included in Gasket Set – Part No. 299577.
†Included in Carburetor Overhaul Kit – Part No. 394693.

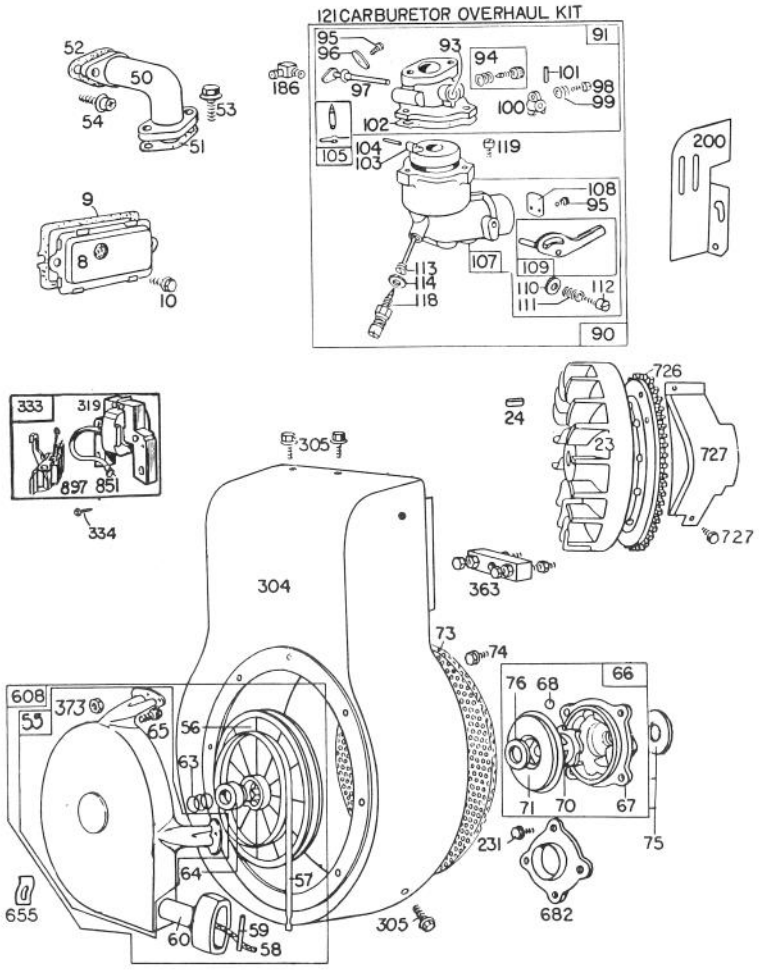

ENGINE BRIGGS & STRATTON MODEL NO. 190402-2720-01 (Continued)

Ref. No.	Part No.	Description	No. Used
99	26157	Spring – Throttle Adjustment	1
100	211712	Stop – Throttle	1
101	93043	Pin – Throttle Stop	1
102	†27918	Gasket – Carburetor Body	1
103	99333	Float – Carburetor	1
104	†230896	Pin – Float Hinge	1
105	394681	Valve – Fuel Inlet	1
107	391909	Body Assembly – Lower Carburetor	1
108	221835	Valve – Choke	1
109	391888	Shaft and Lever – Choke	1
110	222712	Washer – Choke Lever	1
111	26155	Spring – Choke Lever	1
112	23123	Screw – Choke Lever	1
113	†395207	Nozzle – Carburetor	1
114	†68667	Gasket – Nozzle	1
118	†99525	Valve – Needle	1
119	93496	Screw – Hex. Hd.	1
121	394693	Carburetor Overhaul Kit	1
186	67218	Connector – Fuel Pipe	1

Ref. No.	Part No.	Description	No. Used
200	221760	Guide – Air	1
231	93064	Screw	1
304	390516	Housing – Blower	1
305	93158	Screw	1
319	395326	Armature Assembly	1
333	395492	Armature Group	1
334	93381	Screw Armature Mounting	1
363	19203	Puller – Flywheel (Optional Accessory)	1
373	92987	Nut – Hex.	1
608	390391	Starter Assembly – Rewind	1
655	222598	Anchor – Spring	1
682	211516	Shield – Starter Clutch	1
726	392134	Gear – Ring (Aluminum – Includes Mounting Parts)	1
727	221940	Guard – Ring Gear Uses: 93712 Screw (2) 93713 Lock – Washer (2)	1
851	221798	Terminal – Ignition Cable	1
897	394970	Trigger Coil	1

*Included in Gasket Set – Part No. 299577.
†Included in Carburetor Overhaul Kit – Part No. 394693.

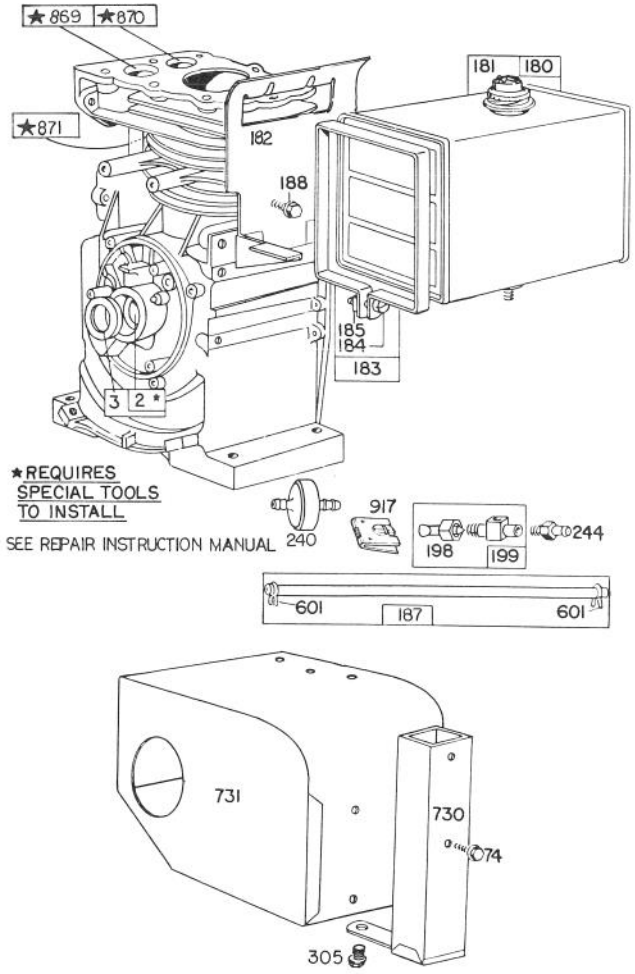

ENGINE BRIGGS & STRATTON MODEL NO. 190402-2720-01 (Continued)

Ref. No.	Part No.	Description	No. Used
2	295962	Bushing – Cylinder **Note:** Requires special tools for installation.	1
3	294606	Seal – Oil	1
74	93042	Screw	1
180	290816	Tank Assembly – Fuel	1
181	297866	Cap – Fuel Tank	1
182	221935	Bracket – Fuel Tank	1
183	291367	Strap Assembly – Fuel Tank	1
184	91257	Screw – Machine, Fil. Hd. –	1
185	90970	Nut – Square	1
187	296004	Pipe – Fuel (Flexible) 23" Long	1
188	93535	Screw	1
198	293934	Valve – Fuel Shut-Off	1
			1

Ref. No.	Part No.	Description	No. Used
199	297563	Outlet – Fuel Tank	1
240	298090	Filter – Fuel	1
244	230318	Connector – Fuel Pipe	1
305	93158	Screw	1
601	93053	Clamp – Fuel Pipe	1
730	299384	Stack – Carb.	1
731	299391	Hood – Snow	1
869	211661	Seat – Intake Valve (Standard)	1
870	211661	Seat – Exhaust Valve (Standard)	1
871		Guide – Exhaust Valve 231218 or 230655 See Repair Manual	1
917	223271	Valve Handle – Fuel Shut-Off	1

MAINTENANCE RECORD

Date	Hours Used	Check Scraper	Check Belt	Check Spark Plug	Preparing For Storage	Comments

PRODUCT CHANGES

In an effort to make improvements available to TORO owners as quickly as possible, minor changes are incorporated into Toro's products from time to time that do not become immediately shown in the Parts Catalog. If such a change apparently has been made in your unit, which is not reflected in your manual, see your TORO Distributor or his Authorized TORO Service Dealer for information and part numbers.

IDENTIFICATION AND ORDERING

MODEL AND SERIAL NUMBERS

The Snowthrower has two identification numbers: a model number and a serial number. The two numbers are stamped on a decal which is located on left rear side of the engine mounting plate. In any correspondence concerning the Snowthrower, supply model and serial numbers to assure that correct information and replacement parts are obtained.

To order replacement parts from an Authorized TORO Service Dealer, supply the following information:

1. Model and serial numbers of the Snowthrower.
2. Part number, description, and quantity of part(s) desired.

Note: Do not order by reference number if a parts catalog is being used; use the PART NUMBER.

The Toro Promise

A ONE YEAR LIMITED WARRANTY

The Toro Company promises to repair your TORO Product if defective in materials or workmanship. The following time periods from the date of purchase apply:

Residential Product . . . . . 1 Year
Residential Products Used Commercially . . . 45 Days

The costs of parts and labor are included, but the customer pays the transportation costs. Just return any residential product to an Authorized TORO Service Dealer or TORO Distributor.

Should you feel your TORO Product is defective and wish to rely on The Toro Promise, the following procedure is recommended:

1. Contact any Authorized TORO Service Dealer, TORO Master Service Dealer, or TORO Distributor (the Yellow Pages of your telephone directory is a good reference source).
2. He will either instruct you to return the product to him or recommend another Authorized TORO Service outlet which might be more convenient.
3. Bring the product along with your original sales slip, or other evidence of purchase date, to the service dealer.
4. The servicing dealer will inspect the unit, advise you whether the product is defective and, if so, make all repairs necessary to correct the defect without extra charge to you.

If for any reason you are dissatisfied with the dealer's analysis of the defect or the service performed, you may contact us.

Write:

TORO Customer Service Department
8111 Lyndale Avenue South
Minneapolis, Minnesota 55420

The above remedy of product defects through repair by an Authorized TORO Service Dealer is the purchaser's sole remedy for any defect.

THERE IS NO OTHER EXPRESS WARRANTY. ALL IMPLIED WARRANTIES OF MERCHANTABILITY AND FITNESS FOR USE ARE LIMITED TO THE DURATION OF THE EXPRESS WARRANTY.

Some states do not allow limitations on how long an implied warranty lasts, so the above limitation may not apply to you.

This warranty applies only to parts or components which are defective and does not cover repairs necessary due to normal wear, misuse, accidents, or lack of proper maintenance. Regular, routine maintenance of the unit to keep it in proper operating condition is the responsibility of the owner.

All warranty repairs reimbursable under The Toro Promise must be performed by an Authorized TORO Service Dealer using Toro approved replacement parts.

Repairs or attemped repairs by anyone other than an Authorized TORO Service Account are not reimbursable under The Toro Promise. In addition, these unauthorized repair attempts may result in additional malfunctions, the correction of which is not covered by warranty.

THE TORO COMPANY IS NOT LIABLE FOR INDIRECT, INCIDENTAL OR CONSEQUENTIAL DAMAGES IN CONNECTION WITH THE USE OF THE PRODUCT INCLUDING ANY COST OR EXPENSE OF PROVIDING SUBSTITUTE EQUIPMENT OR SERVICE DURING PERIODS OF MALFUNCTION OR NON-USE.

Some states do not allow the exclusion or limitation of incidental or consequential damages, so the above limitation or exclusion may not apply to you.

This warranty gives you specific legal rights, and you may also have other rights which vary from state to state.

COUNTRIES OTHER THAN THE UNITED STATES OR CANADA

Customers who have purchased TORO products exported from the United States or Canada should contact their TORO Distributor (Dealer) to obtain guarantee policies for your country, province or state. If for any reason you are dissatisfied with your Distributor's service or have difficulty obtaining guarantee information, contact the TORO importer. If all other remedies fail, you may contact us at The Toro Company.

Compliance with Radio Interference Regulations Certified.
Certifie Conforme au Reglement sur le Brouillage Radioelectrique.

Litho in U.S.A.