Form No. 3452-354 Rev C

TORO®

Count on it.

Parts Catalog

# GrandStand® Mower

## With 52in TURBO FORCE® Cutting Unit

**Model No. 72505—Serial No. 411800000 and Up**

Register at www.Toro.com.
Original Instructions (EN)

*3452-354* C

# Ordering Replacement Parts

To order replacement parts, please supply the part number, the quantity, and the description of each part desired.

### Understanding Reference Numbers

Each identified part in an illustration has a reference number. The reference number for a part also appears in the parts list, along with other information about the part.

This catalog uses two special reference number formats, one to indicate parts in a service assembly and another to indicate the quantity of a given part in an illustration.

### Service Assembly Reference Numbers

Parts in service assemblies have reference numbers in the form a:b. The a represents the reference number of the entire service assembly and the b represents a sequential number unique to each part within the service assembly.

For example, a wheel assembly might be identified by reference number 6, the tire by 6:1, the valve by 6:2, and the wheel by 6:3. When you order the assembly identified by reference number 6, you receive all parts identified by reference numbers 6:1,6:2, and 6:3. However, you may also order any part individually. Reference numbers of this type appear in illustration and in parts lists.

### Reference Numbers Indicating Quantity

In an illustration, if a reference number indicates more than one part, the reference number has the form nX y. The n represents the quantity of the part, the X is the multiplication symbol, and the y represents the reference number.

For example, in an illustration, the reference number 2X 37 means that two of the parts identified by reference number 37 are indicated.

# Contents

52 Inch Deck Assembly . . . . . 4
Deck and Decal Assembly No. 139-8097 . . . . . 6
Spindle Assembly No. 137-9780 . . . . . 8
Deflector Assembly No. 120-2451 . . . . . 10
Ground Drive Assembly . . . . . 12
LH Transmission Assembly No. 138-5838 . . . . . 14
RH Transmission Assembly No. 138-5839 . . . . . 16
Overflow Hose Assembly . . . . . 18
Motion Control Assembly . . . . . 20
Control Handle Assembly No. 132-5157 . . . . . 22
Control Handle Assembly No. 132-5158 . . . . . 24
Parking Brake Assembly . . . . . 26
Deck Lift Assembly . . . . . 28
HOC Lever Assembly No. 130-1755 . . . . . 30
Frame Assembly . . . . . 32
Wheel and Bearing Assembly . . . . . 34
Platform Assembly . . . . . 36
Engine Assembly . . . . . 38
Fuel Tank Assembly . . . . . 40
Electrical Assembly . . . . . 42
Attachments and Accessories . . . . . 44

**© 2024—The Toro® Company**
**8111 Lyndale Avenue South**
**Bloomington, MN 55420**



**Contact us at www.Toro.com.**
**Printed in the USA.**
**All Rights Reserved**

# 52 Inch Deck Assembly

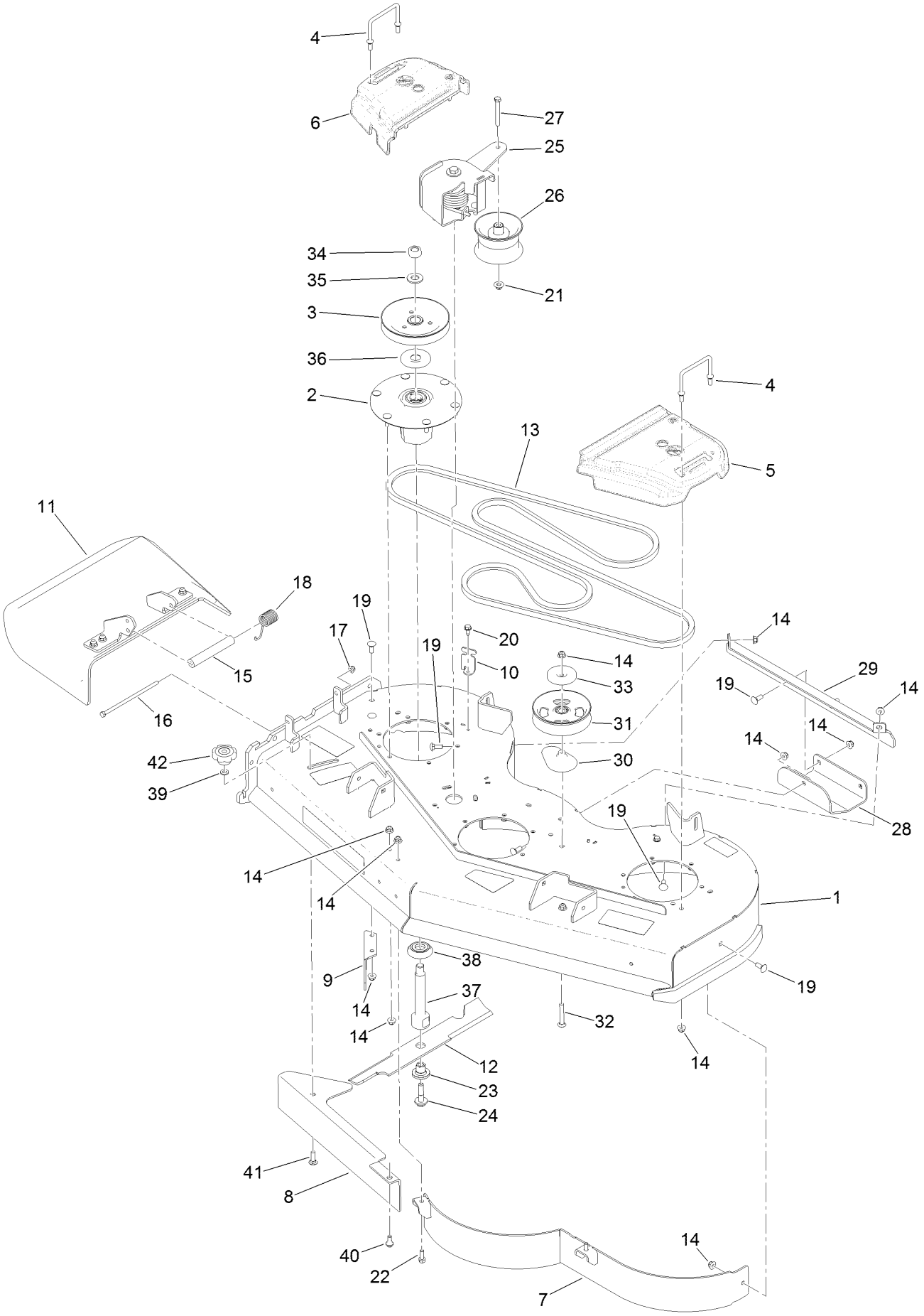

# 52 Inch Deck Assembly (continued)

| Ref. | Part Number | Qty. | Description |
|---|---|---|---|
| 1 | 139-8097 | 1 | 52 Deck ASM |
| 2 | 137-9780 | 3 | Spindle ASM |
| 3 | 138-6061 | 3 | Sheave-Blade, Drive |
| 4 | 109-6982 | 3 | Wireform-Cover |
| 5 | 109-6936 | 1 | Cover-Belt, LH |
| 6 | 109-6935 | 1 | Cover-Belt, RH |
| 7 | 114-1979-01 | 1 | Baffle-52 Inch |
| 8 | 139-8105-01 | 1 | Plate-Baffle, Formed [red] |
| 9 | 130-6594-01 | 1 | Baffle-Discharge |
| 10 | 117-5758-03 | 4 | Bracket-Cover |
| 11 | 120-2451 | 1 | Deflector ASM |
| 12 | 140-1242 | 3 | Blade-Flow, High |
| 13 | 131-1122 | 1 | Belt-V |
| 14 | 104-8301 | 39 | Nut-HF, NI |
| 15 | 105-4622 | 1 | Spacer |
| 16 | 322-50 | 1 | Screw-HH |
| 17 | 104-8300 | 1 | Nut-HF, NI |
| 18 | 108-4052 | 1 | Spring-Torsion |
| 19 | 3231-2 | 8 | Bolt-CARR |
| 20 | 32144-70 | 4 | Screw-HWHTF |
| 21 | 109-6658 | 1 | Nut-Flange, NI |
| 22 | 92-1624 | 2 | Screw-HWH Thd Form |
| 23 | 137-9787 | 3 | Bushing-Hex |
| 24 | 109-9220 | 3 | Screw-Sems |
| 25 | 136-7395 | 1 | Idler Torsion ASM |
| 26 | 127-1971 | 1 | Pulley-Idler |
| 27 | 323-14 | 1 | Screw-HH |
| 28 | 114-1908-01 | 1 | Skid |
| 29 | 130-6648-01 | 1 | Bracket-Skid |
| 30 | 109-2872 | 1 | Spacer-Pulley |
| 31 | 136-5405 | 1 | Pulley-Idler, Flat |
| 32 | 3231-44 | 1 | Screw-CARR |
| 33 | 132-5154 | 1 | Shield-Dust |
| 34 | 116-7306 | 3 | Nut-Hex |
| 35 | 103-2802 | 3 | Washer |
| 36 | 103-1330 | 3 | Guard-Bearing, Top |
| 37 | 138-6045 | 3 | Shaft-Spindle |
| 38 | 137-9784 | 3 | Guard-Bottom |
| 39 | 100-4852 | 1 | Washer-Hardened |
| 40 | 94-7582 | 1 | Bolt-Shoulder |
| 41 | 3231-25 | 1 | Bolt-CARR |
| 42 | 109-1092 | 1 | Knob |

# Deck and Decal Assembly No. 139-8097

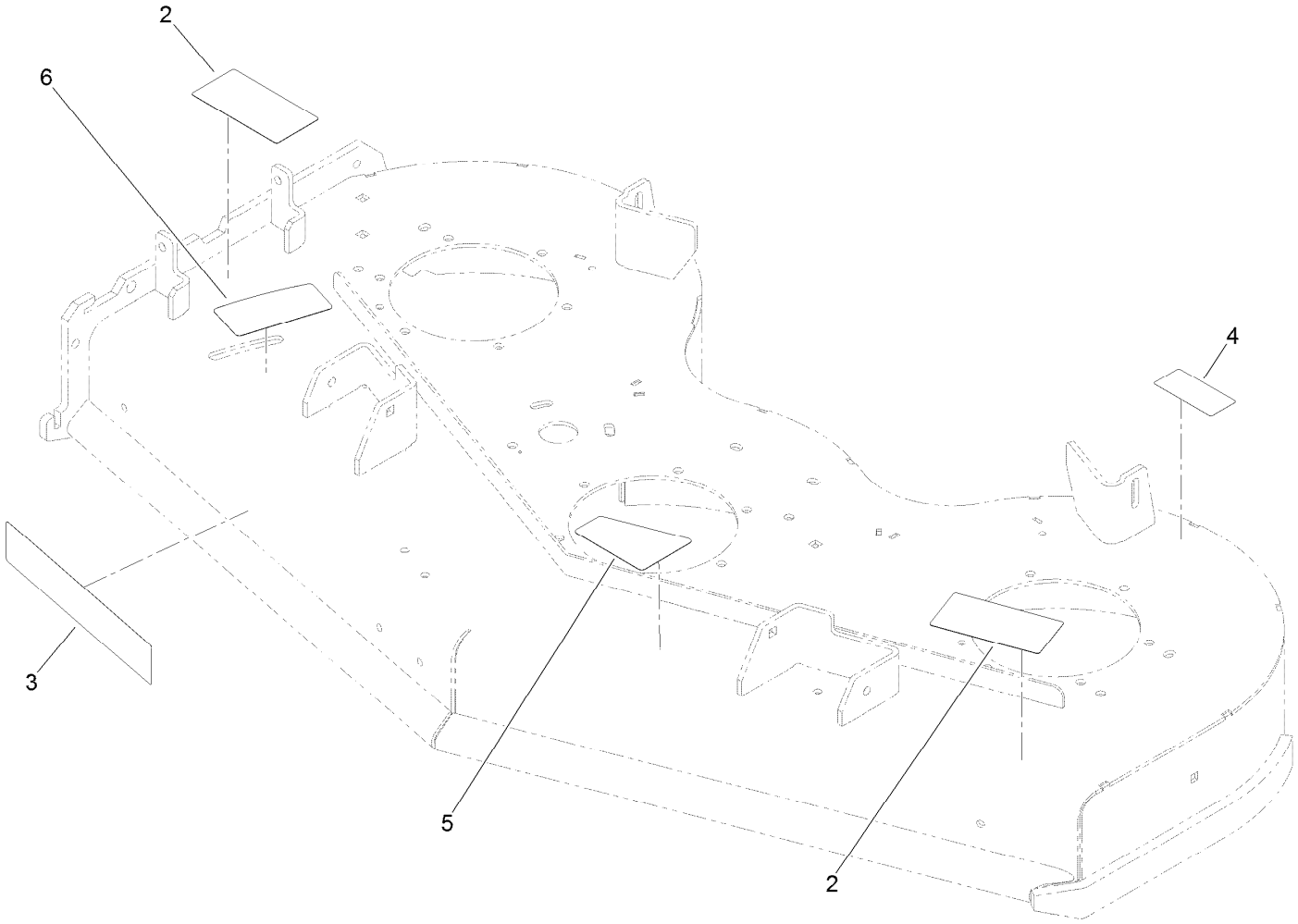

# Deck and Decal Assembly No. 139-8097 (continued)

| Ref. | Part Number | Qty. | Description |
|---|---|---|---|
| 2 | 133-4604 | 2 | Decal-Danger |
| 3 | 107-1618 | 1 | Decal |
| 4 | 116-8283 | 1 | Decal-Torque, Bolt |
| 5 | 131-3507 | 1 | Decal-Belt, Tension (CE) |
| 6 | 131-1180 | 1 | Decal-Adjustment, Baffle |

# Spindle Assembly No. 137-9780

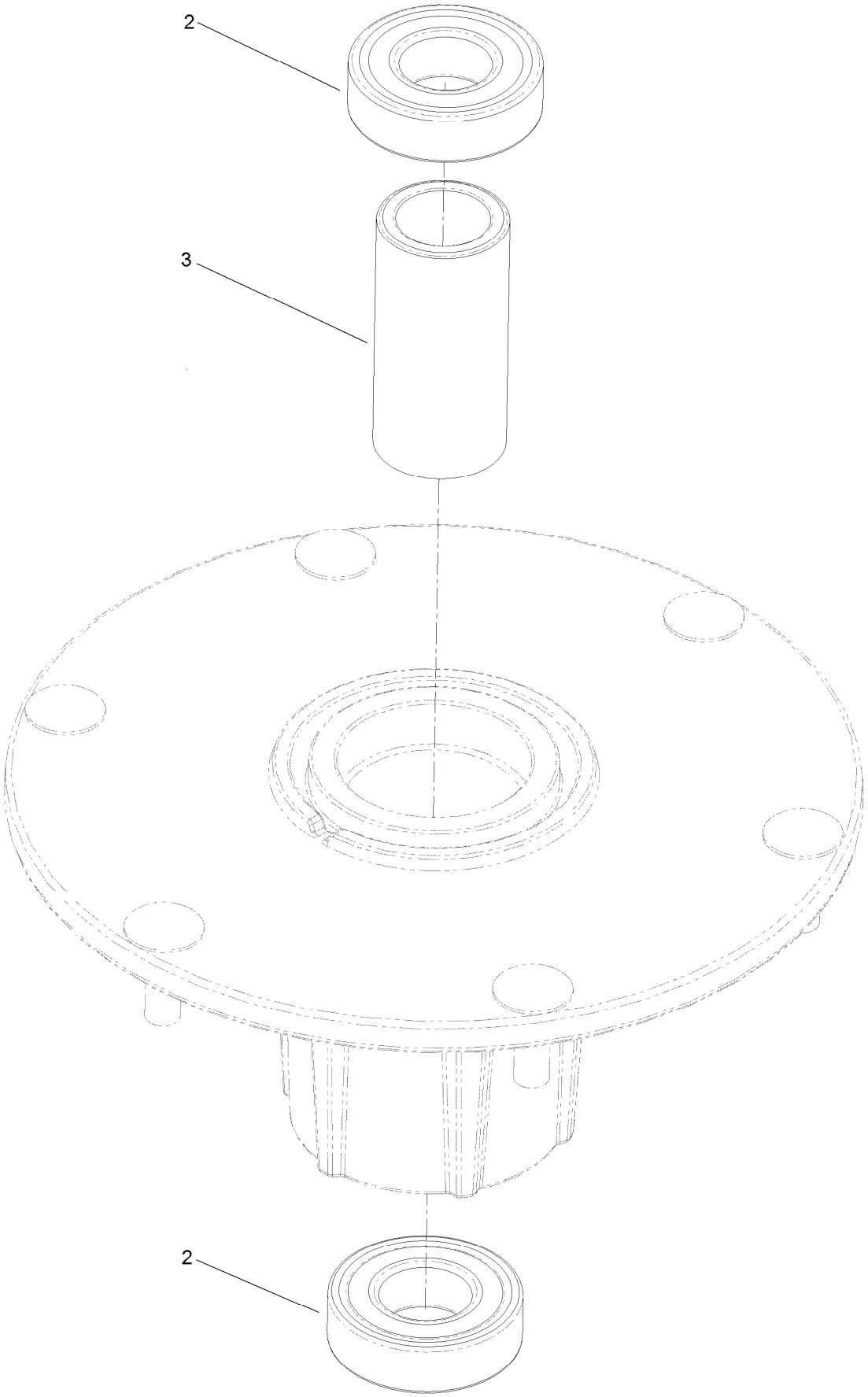

# Spindle Assembly No. 137-9780 (continued)

| Ref. | Part Number | Qty. | Description |
|---|---|---|---|
| 2 | 116-0720 | 2 | Bearing-Ball |
| 3 | 138-6042 | 1 | Spacer-Bearing |

# Deflector Assembly No. 120-2451

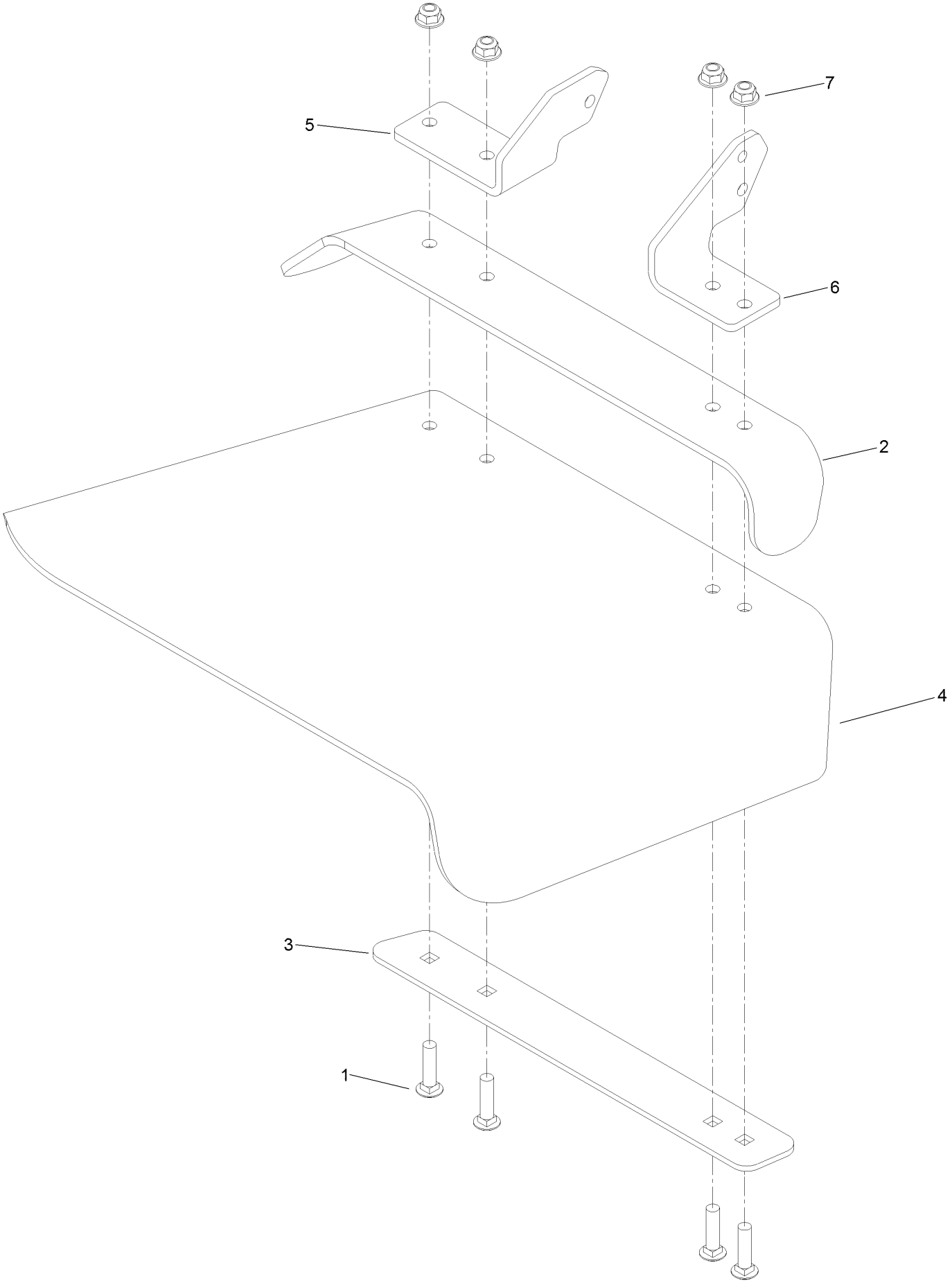

# Deflector Assembly No. 120-2451 (continued)

| Ref. | Part Number | Qty. | Description |
|---|---|---|---|
| 1 | 3231-4 | 4 | Screw-CARR |
| 2 | 106-3246-01 | 1 | Deflector |
| 3 | 106-3248-03 | 1 | Strap-Discharge |
| 4 | 110-0759 | 1 | Deflector-Rubber |
| 5 | 108-4059-01 | 1 | Plate-Hinge, Rear |
| 6 | 106-3253-01 | 1 | Plate-Hinge, Front |
| 7 | 104-8301 | 4 | Nut-HF, NI |

# Ground Drive Assembly

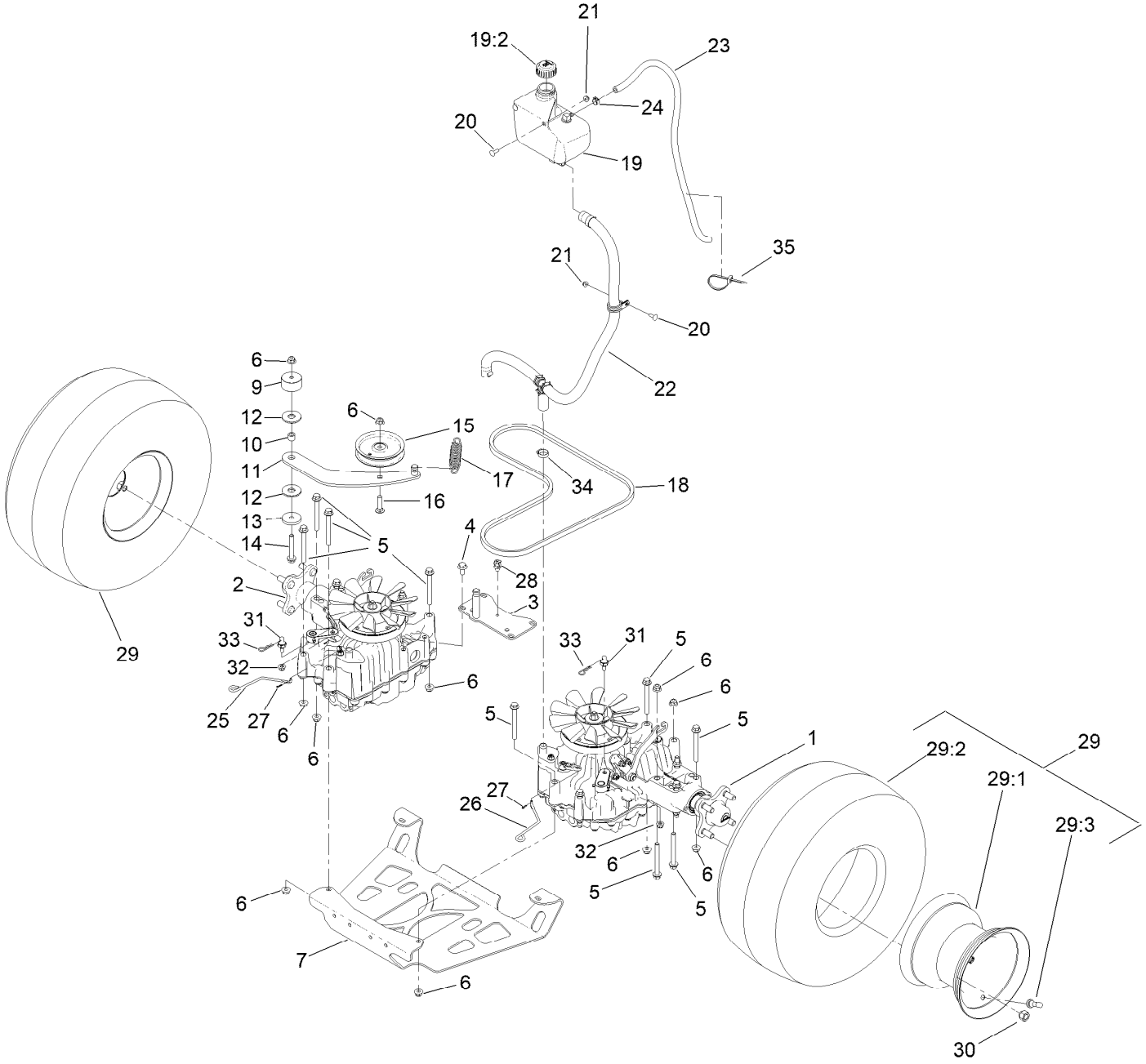

# Ground Drive Assembly (continued)

| Ref. | Part Number | Qty. | Description |
|---|---|---|---|
| 1 | 138-5838 | 1 | LH Transmission ASM |
| 2 | 138-5839 | 1 | RH Transmission ASM |
| 3 | 131-1131-03 | 1 | Support-Transaxle |
| 4 | 93-2569 | 4 | Screw-HHF |
| 5 | 116-4701 | 16 | Screw-HHF |
| 6 | 104-8301 | 18 | Nut-HF, NI |
| 7 | 138-1108-03 | 1 | Plate-Skid |
| 9 | 117-5351 | 1 | Spacer |
| 10 | 1-413088 | 1 | Bushing-Lever, Lift |
| 11 | 131-1175 | 1 | Arm-Idler |
| 12 | 114-0463 | 2 | Washer-Friction, Composite |
| 13 | 110-9981 | 1 | Washer-Plain |
| 14 | 3234-39 | 1 | Screw-HHF |
| 15 | 93-1622 | 1 | Pulley-Idler |
| 16 | 3231-4 | 1 | Screw-CARR |
| 17 | 138-1104 | 1 | Spring-Extension |
| 18 | 131-1124 | 1 | Belt-V |
| 19 | 132-1135 | 1 | Tank-HYD |
| 19:2 | 133-8677 | 1 | Cap-Vented |
| 19:5 | 140-9463 | 1 | Strainer-Neck, Removable ● |

| Ref. | Part Number | Qty. | Description |
|---|---|---|---|
| 20 | 3229-25 | 3 | Screw-CARR |
| 21 | 104-7201 | 3 | Nut-HF, NI |
| 22 | | 1 | Gs Overflow Hose ASM ■ |
| 23 | 109-0309 | 1 | Hose-Fuel |
| 24 | 92-2379 | 1 | Clamp-Hose |
| 25 | 131-7469 | 1 | Rod-Bypass, RH |
| 26 | 131-7470 | 1 | Rod-Bypass, LH |
| 27 | 108-2992 | 2 | Pin-Hair |
| 28 | 32180-030 | 1 | Clip-Tie |
| 29 | 140-1888 | 2 | Wheel And Tire ASM |
| 29:1 | 140-1889 | 1 | Rim-8 Inch Black |
| 29:2 | 120-6466 | 1 | Tire |
| 29:3 | 232-27 | 1 | Stem-Valve |
| 30 | 242-50 | 8 | Nut-Lug |
| 31 | 132-7584 | 2 | Spacer-Hex |
| 32 | 104-8300 | 2 | Nut-HF, NI |
| 33 | 3290-250 | 2 | Pin-Cotter |
| 34 | 2412-141 | 2 | Clamp-Drive, Worm |
| 35 | 3290-378 | 1 | Tie-Cable |

● Not illustrated

■ Not serviced separately

# LH Transmission Assembly No. 138-5838

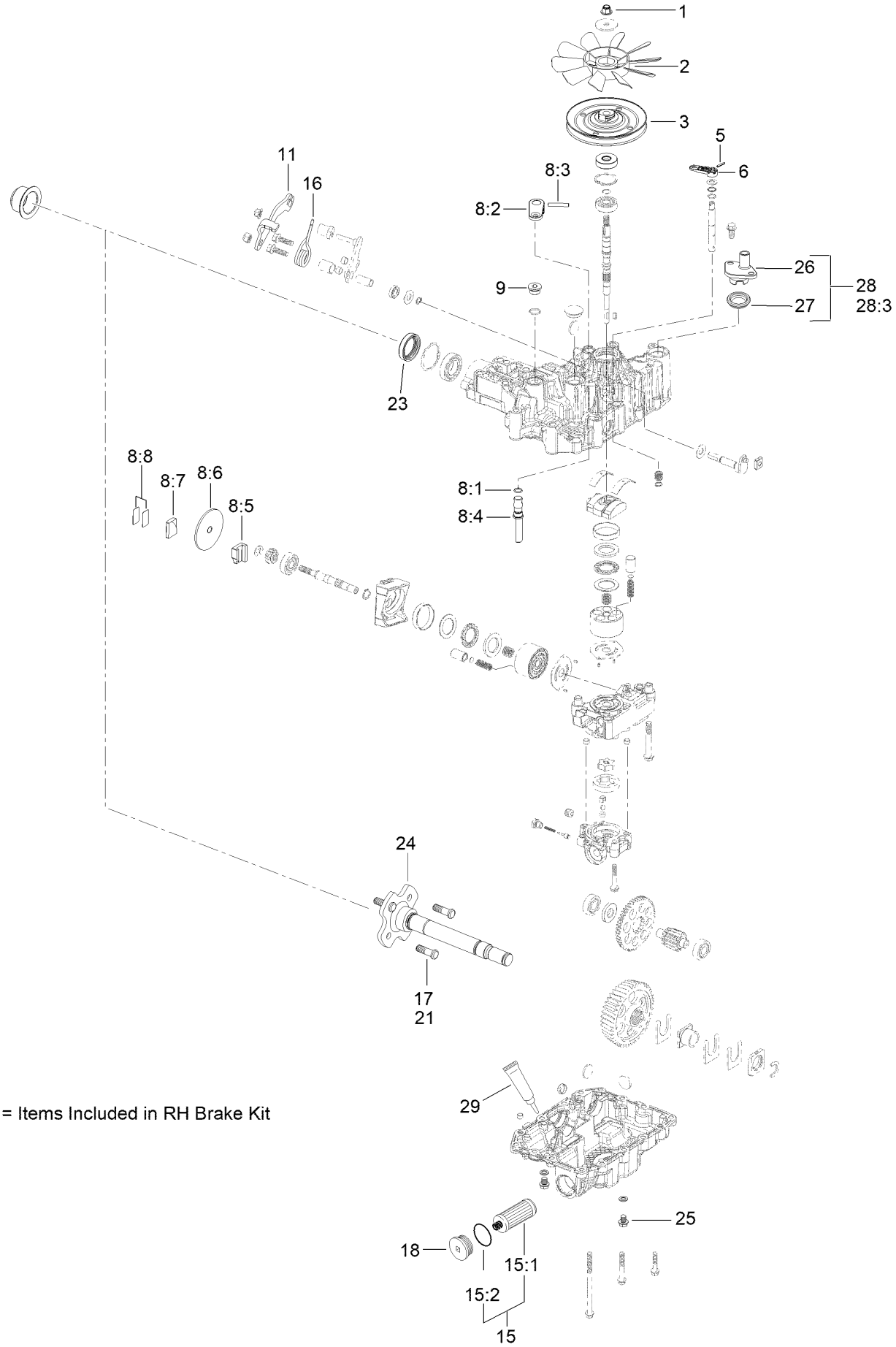


8 = Items Included in RH Brake Kit

# LH Transmission Assembly No. 138-5838 (continued)

| Ref. | Part Number | Qty. | Description |
|---|---|---|---|
| 1 | 132-4737 | 1 | Nut-Lock |
| 2 | 132-4738 | 1 | Fan |
| 3 | 132-4739 | 1 | Pulley |
| 5 | 104-3265 | 1 | Pin |
| 6 | 132-4700 | 1 | Lever-Bypass |
| 8 | 133-1468 | 1 | Brake Kit,Left |
| 8:1 | | 1 | O-Ring ● |
| 8:2 | | 1 | Arm-Brake ● |
| 8:3 | | 1 | Pin-Roll ● |
| 8:4 | | 1 | Shaft-Brake ● |
| 8:5 | | 1 | Actuator-Brake ● |
| 8:6 | | 1 | Disc-Brake ● |
| 8:7 | | 1 | Shoe-Brake ● |
| 8:8 | | 1 | Shim Kit ● |
| 9 | 132-4735 | 1 | Cap-Oil |
| 11 | 136-5401 | 1 | Lever-Control, RH |

| Ref. | Part Number | Qty. | Description |
|---|---|---|---|
| 15 | 132-4743 | 1 | Hydro Filter Kit |
| 15:1 | 136-5409 | 2 | Filter |
| 15:2 | 136-5410 | 2 | O-Ring |
| 16 | 137-4109 | 1 | Spring-Torsion |
| 17 | 137-9509 | 4 | Stud-Wheel |
| 18 | 138-4613 | 1 | Cap-Oil Filter |
| 21 | 137-9509 | 1 | Stud-Wheel |
| 23 | 139-5587 | 1 | Seal-Axle, Ua |
| 24 | 139-5588 | 1 | Axle |
| 25 | 139-5589 | 2 | Drain Bolt |
| 26 | 139-5590 | 1 | Expansion Fitting |
| 27 | 139-5591 | 1 | Grommet Seal, Expansion Fitting |
| 28 | 139-7871 | 1 | Expansion Fitting - W/ Seal |
| 28:3 | | 1 | M8*20 Flange Bolt ● |
| 29 | 138-4628 | 1 | Seal Kit |

● Not serviced separately

# RH Transmission Assembly No. 138-5839

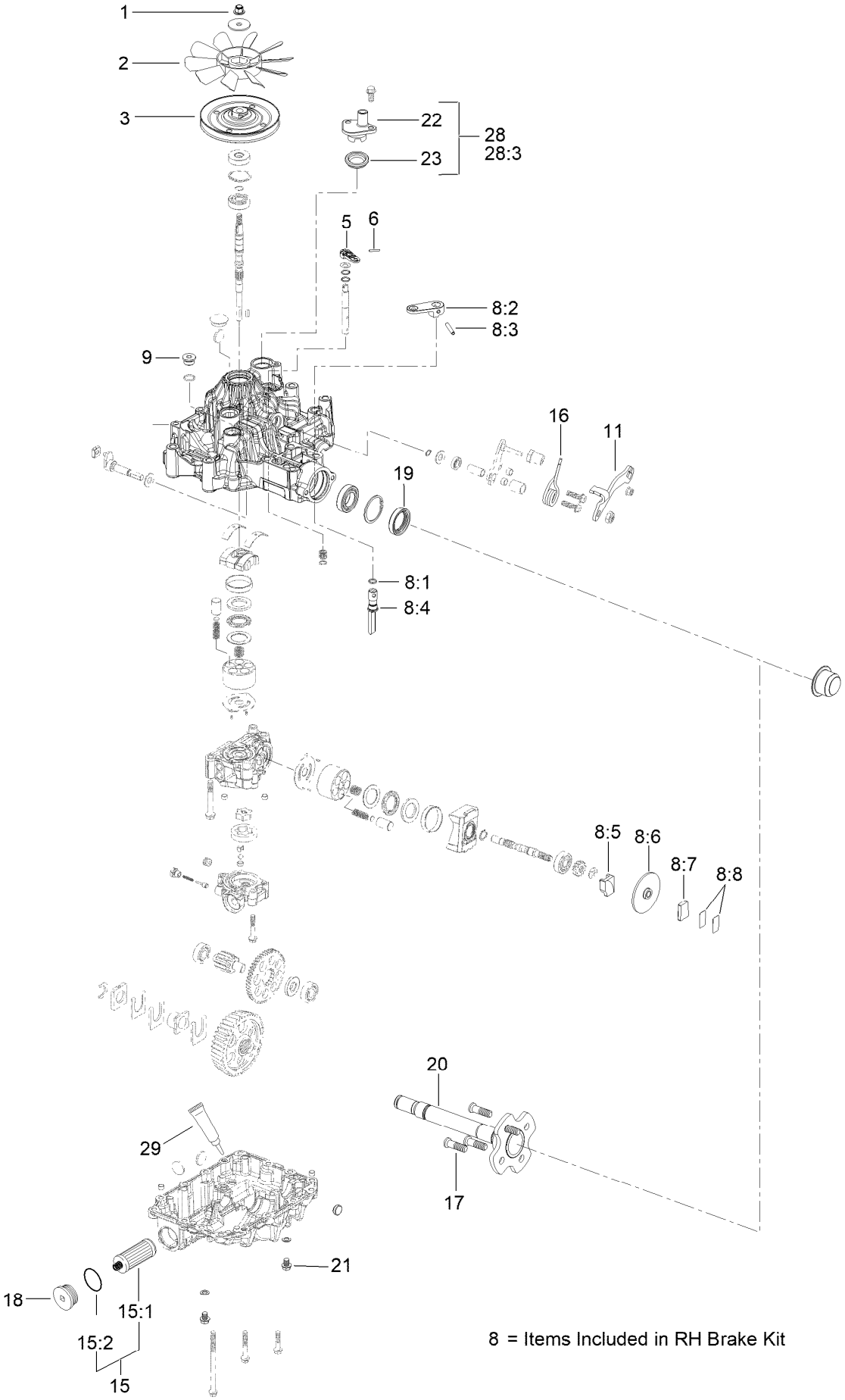


8 = Items Included in RH Brake Kit

# RH Transmission Assembly No. 138-5839 (continued)

| Ref. | Part Number | Qty. | Description |
|---|---|---|---|
| 1 | 132-4737 | 1 | Nut-Lock |
| 2 | 132-4738 | 1 | Fan |
| 3 | 132-4739 | 1 | Pulley |
| 5 | 104-3265 | 1 | Pin |
| 6 | 132-4700 | 1 | Lever-Bypass |
| 8 | 133-1462 | 1 | RH Brake Kit |
| 8:1 | | 1 | O-Ring ● |
| 8:2 | | 1 | Arm-Brake ● |
| 8:3 | | 1 | Pin-Roll ● |
| 8:4 | | 1 | Shaft-Brake ● |
| 8:5 | | 1 | Actuator-Brake ● |
| 8:6 | | 1 | Disc-Brake ● |
| 8:7 | | 1 | Shoe-Brake ● |
| 8:8 | | 1 | Shim Kit ● |
| 9 | 132-4735 | 1 | Cap-Oil |
| 11 | 136-5401 | 1 | Lever-Control, RH |

| Ref. | Part Number | Qty. | Description |
|---|---|---|---|
| 15 | 132-4743 | 1 | Hydro Filter Kit |
| 15:1 | 136-5409 | 2 | Filter |
| 15:2 | 136-5410 | 2 | O-Ring |
| 16 | 137-4109 | 1 | Spring-Torsion |
| 17 | 137-9509 | 4 | Stud-Wheel |
| 18 | 138-4613 | 1 | Cap-Oil Filter |
| 19 | 139-5587 | 1 | Seal-Axle, Ua |
| 20 | 139-5588 | 1 | Axle |
| 21 | 139-5589 | 2 | Drain Bolt |
| 22 | 139-5590 | 1 | Expansion Fitting |
| 23 | 139-5591 | 1 | Grommet Seal, Expansion Fitting |
| 28 | 139-7871 | 1 | Expansion Fitting - W/ Seal |
| 28:3 | | 1 | M8*20 Flange Bolt ● |
| 29 | 138-4628 | 1 | Seal Kit |

● Not serviced separately

# Overflow Hose Assembly

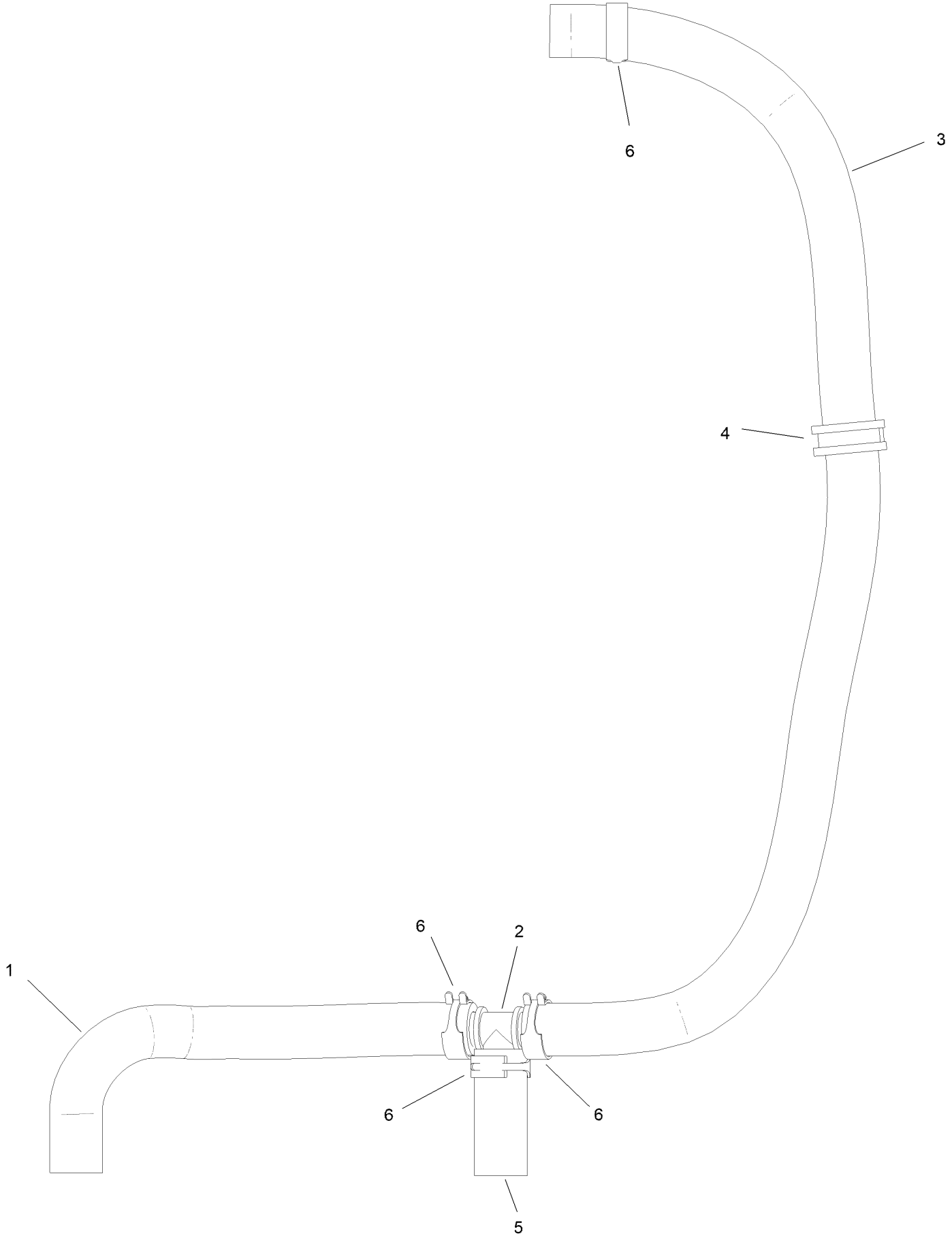

# Overflow Hose Assembly (continued)

| Ref. | Part Number | Qty. | Description |
|---|---|---|---|
| 1 | 145-3444 | 1 | Hose-Hydraulic |
| 2 | 139-4055 | 1 | Fitting Tee |
| 3 | 147-0202 | 1 | Hydraulic Hose |
| 4 | 147-0201 | 1 | R-Clamp |
| 5 | 147-0204 | 1 | Hydraulic Hose |
| 6 | 145-3599 | 4 | Hose Clamp |

# Motion Control Assembly

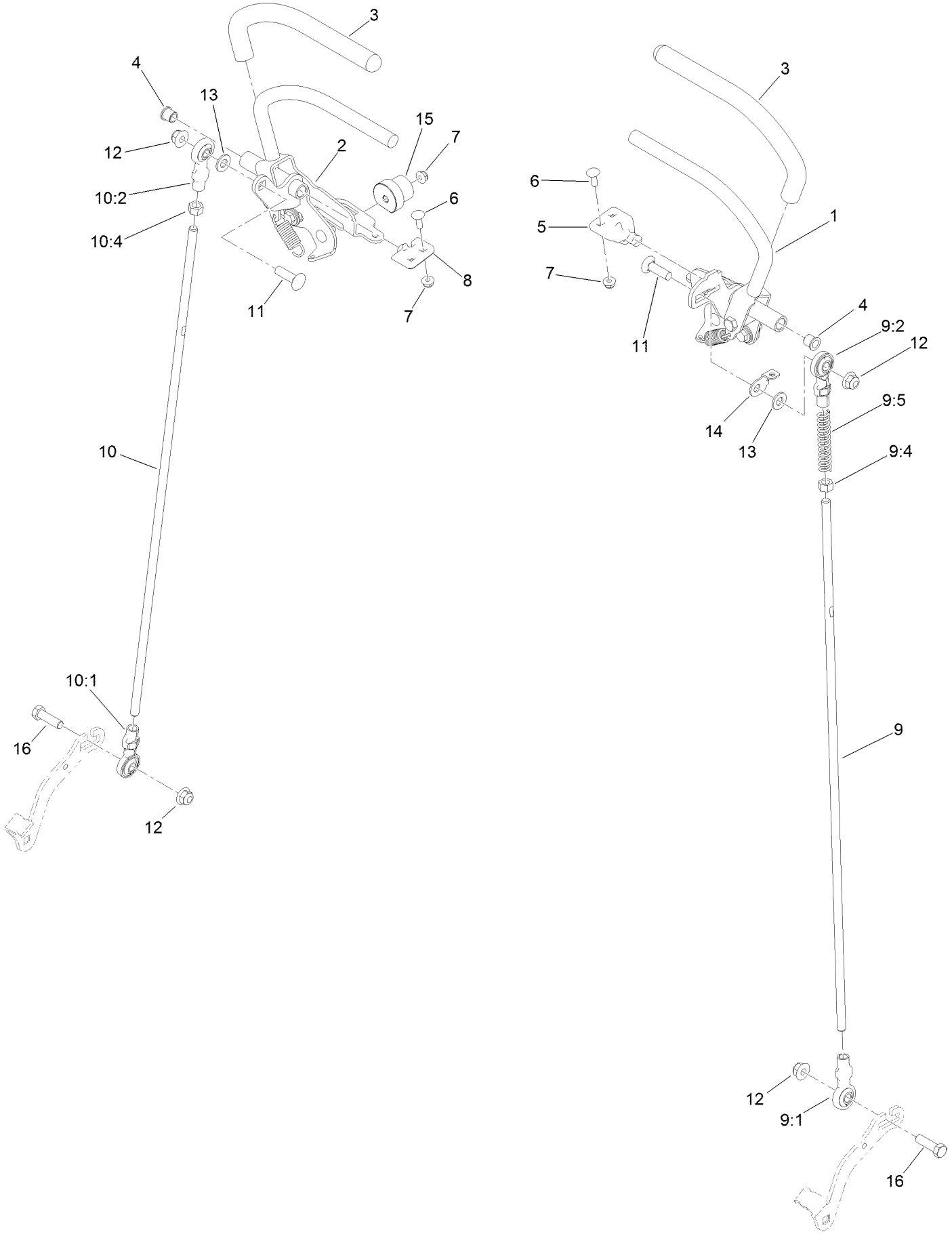

# Motion Control Assembly (continued)

| Ref. | Part Number | Qty. | Description |
|---|---|---|---|
| 1 | 132-5157 | 1 | LH Control Handle ASM |
| 2 | 132-5158 | 1 | RH Control Handle ASM |
| 3 | 119-0222 | 2 | Grip |
| 4 | 103-9928 | 2 | Bearing |
| 5 | 120-3288 | 1 | Tab-Pivot, LH |
| 6 | 3229-1 | 4 | Screw-CARR |
| 7 | 104-7201 | 6 | Nut-HF, NI |
| 8 | 120-3287 | 1 | Tab-Pivot, RH |
| 9 | 138-4619 | 1 | LH Control Rod ASM |
| 9:1 | 138-4647 | 1 | Ball Joint-LH |
| 9:2 | 138-4648 | 1 | Ball Joint-RH |
| 9:4 | 3219-3 | 1 | Nut-Hex |
| 9:5 | 1-603807 | 1 | Spring-Return, Neutral |
| 10 | 138-4620 | 1 | RH Control Rod ASM |
| 10:1 | 138-4647 | 1 | Ball Joint-LH |
| 10:2 | 138-4648 | 1 | Ball Joint-RH |
| 10:4 | 3219-3 | 1 | Nut-Hex |
| 11 | 3231-28 | 2 | Screw-CARR |
| 12 | 104-8301 | 4 | Nut-HF, NI |
| 13 | 3256-24 | 2 | Washer-Plain |
| 14 | 132-7538 | 1 | Bracket-Adjustment, Speed |
| 15 | 126-1499 | 2 | Cam |
| 16 | 323-7 | 2 | Screw-HH |

# Control Handle Assembly No. 132-5157

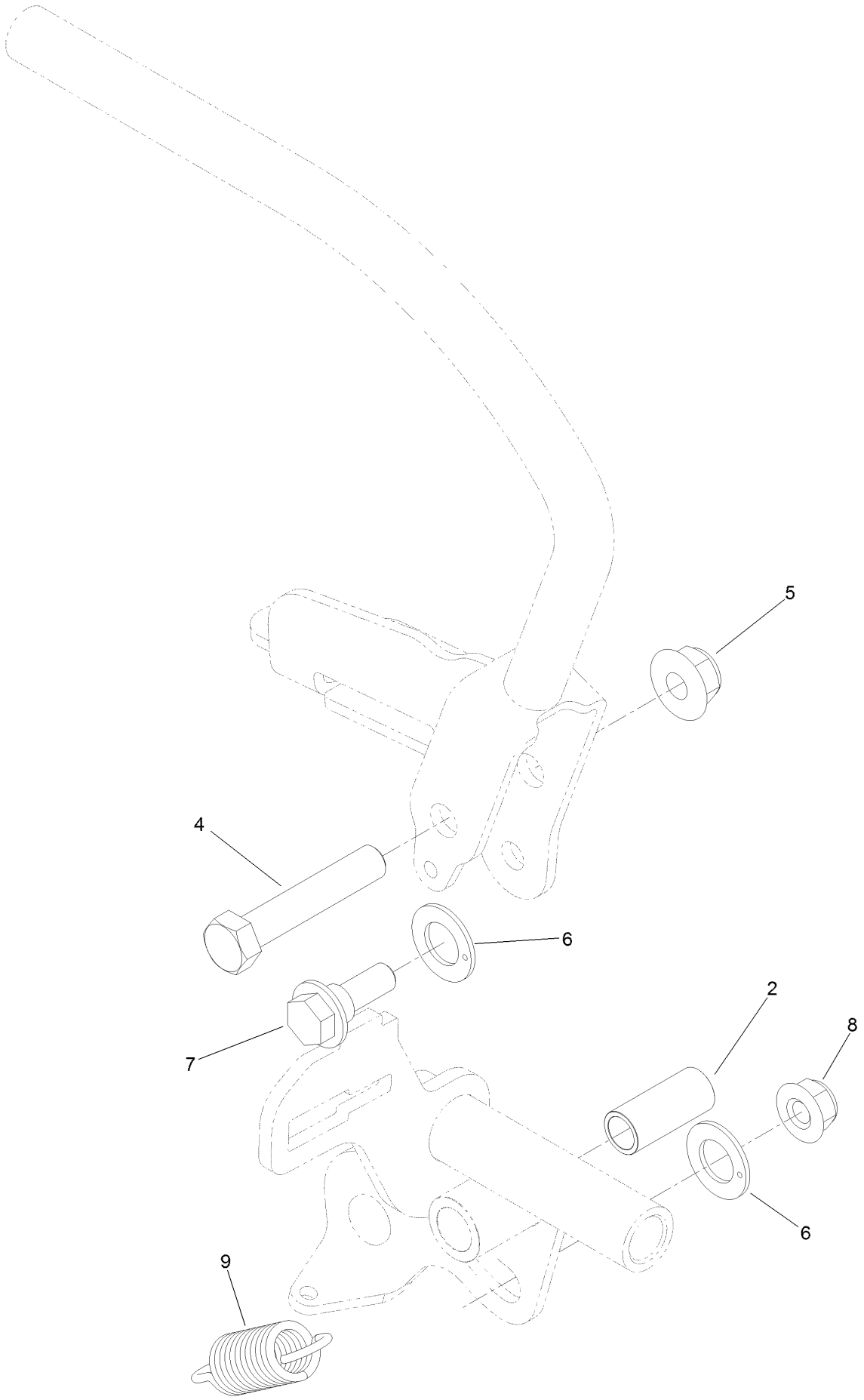

# Control Handle Assembly No. 132-5157 (continued)

| Ref. | Part Number | Qty. | Description |
|---|---|---|---|
| 2 | 131-3562 | 1 | Bearing-Sleeve |
| 4 | 323-10 | 1 | Screw-HH |
| 5 | 104-8301 | 1 | Nut-HF, NI |
| 6 | 110-7191 | 2 | Washer-Thrust |
| 7 | 116-2670 | 1 | Screw-Shoulder |
| 8 | 104-8300 | 1 | Nut-HF, NI |
| 9 | 132-5146 | 1 | Spring-Extension |

# Control Handle Assembly No. 132-5158

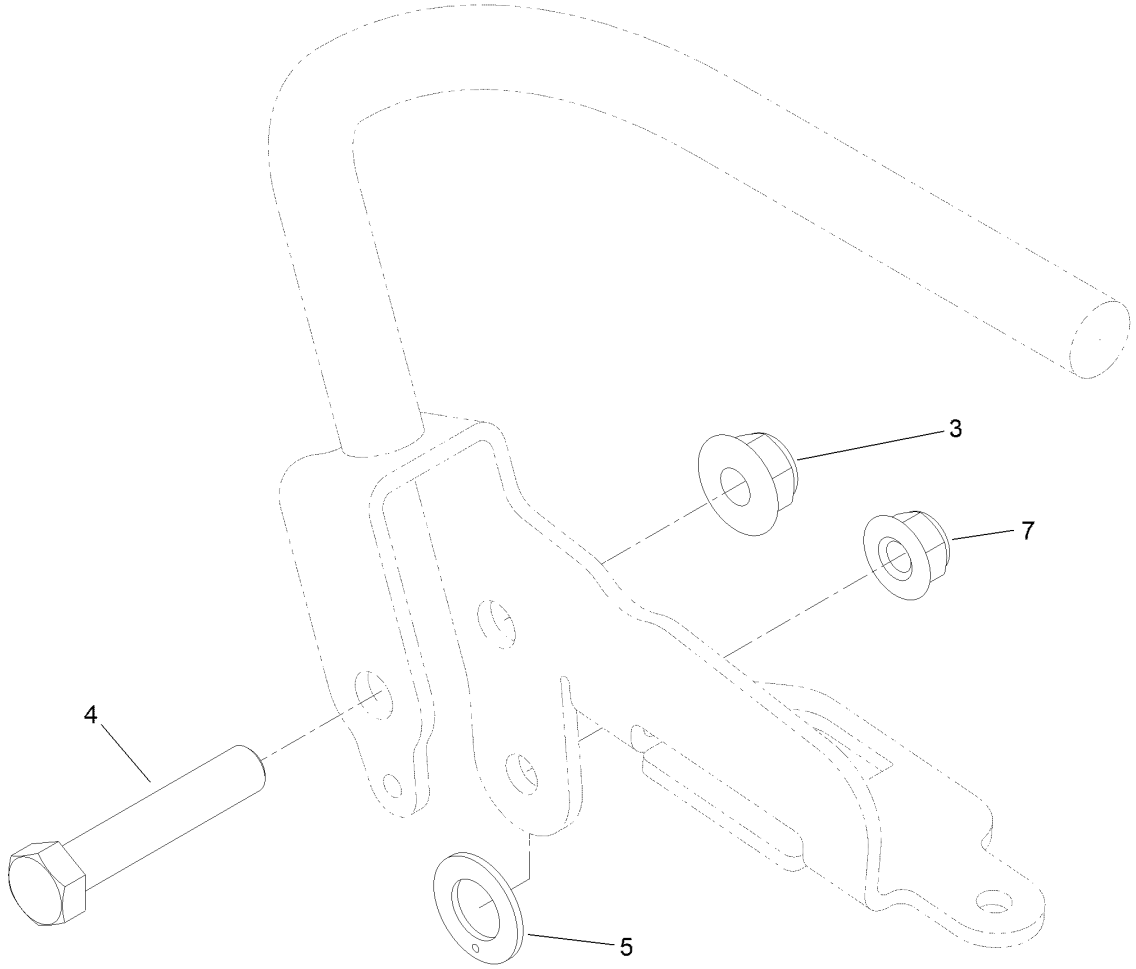


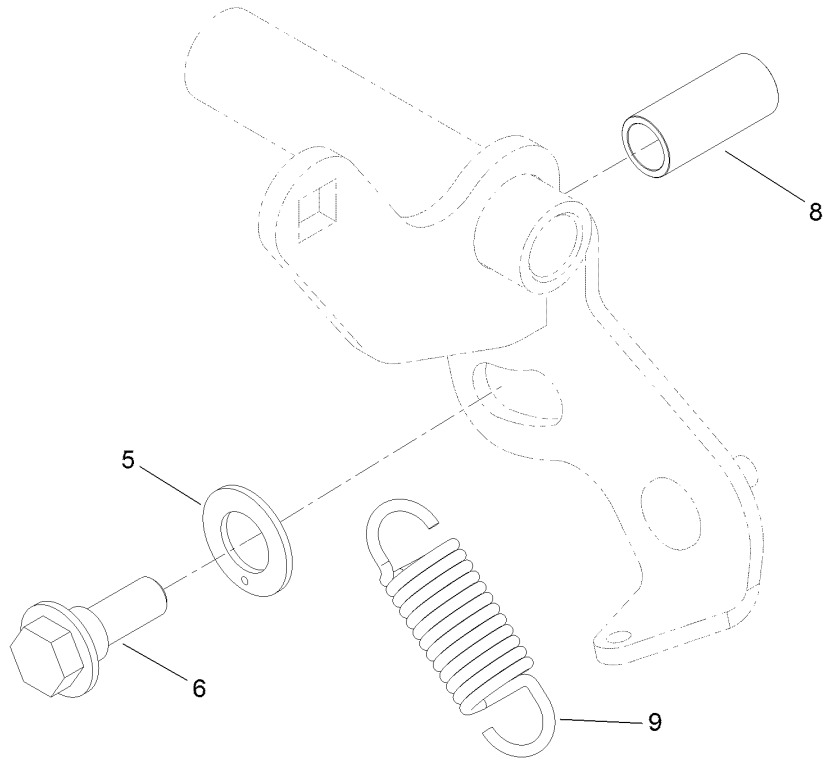

# Control Handle Assembly No. 132-5158 (continued)

| Ref. | Part Number | Qty. | Description |
|---|---|---|---|
| 3 | 104-8301 | 1 | Nut-HF, NI |
| 4 | 323-10 | 1 | Screw-HH |
| 5 | 110-7191 | 2 | Washer-Thrust |
| 6 | 116-2670 | 1 | Screw-Shoulder |
| 7 | 104-8300 | 1 | Nut-HF, NI |
| 8 | 131-3562 | 1 | Bearing-Sleeve |
| 9 | 132-5146 | 1 | Spring-Extension |

# Parking Brake Assembly

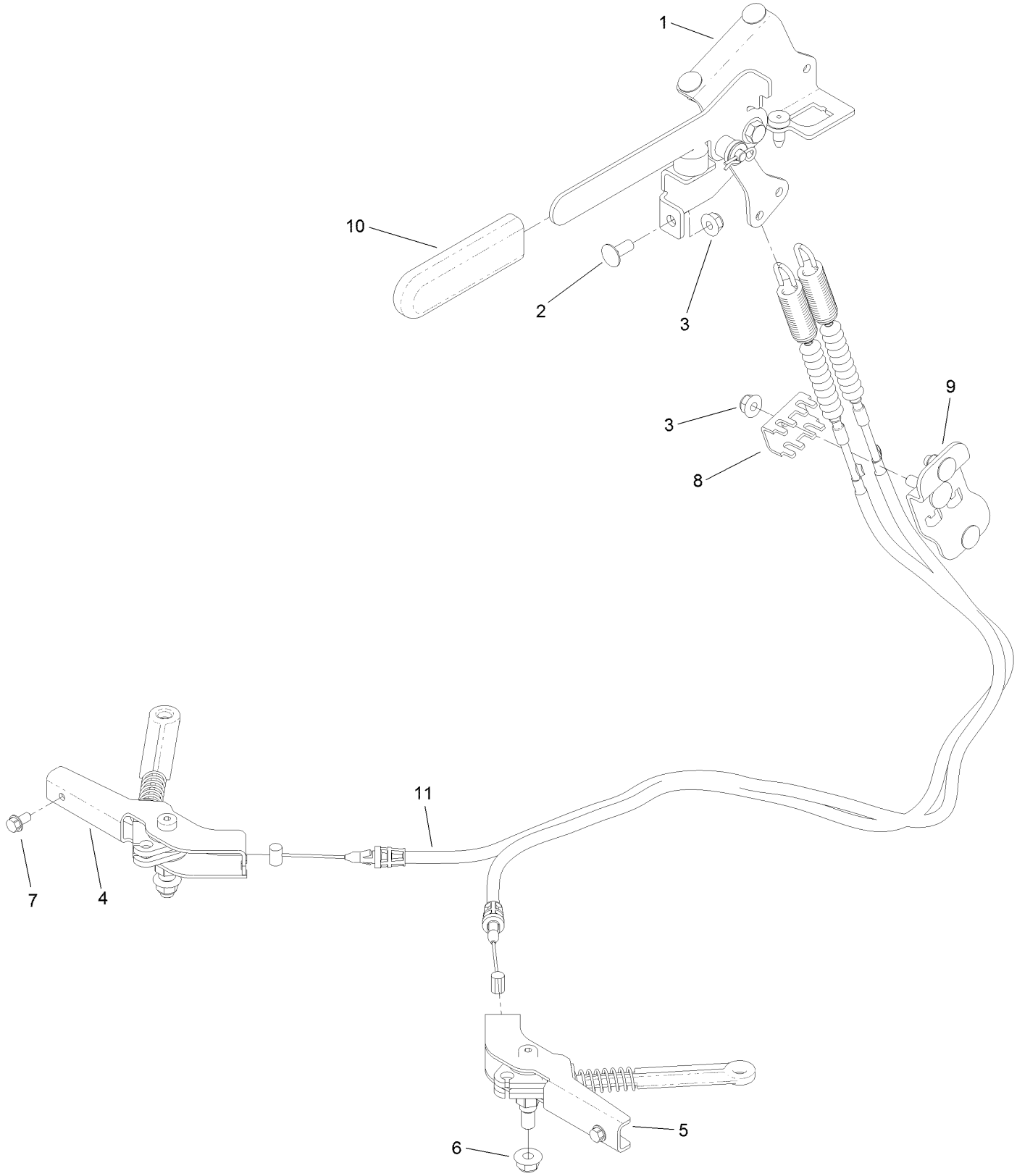

# Parking Brake Assembly (continued)

| Ref. | Part Number | Qty. | Description |
|---|---|---|---|
| 1 | 132-5170 | 1 | Brake Handle ASM |
| 2 | 3230-23 | 5 | Bolt-CARR |
| 3 | 104-8300 | 6 | Nut-HF, NI |
| 4 | 132-5168 | 1 | RH Brake Caliper ASM |
| 5 | 132-5169 | 1 | LH Brake Caliper ASM |
| 6 | 104-8301 | 2 | Nut-HF, NI |
| 7 | 32144-4 | 2 | Screw-HWH |
| 8 | 132-1187 | 1 | Clamp-Cable |
| 9 | 132-7582 | 1 | Mount-Cable, Brake |
| 10 | 1-633268 | 1 | Grip-Lever |
| 11 | 131-1195 | 2 | Cable-Brake |

# Deck Lift Assembly

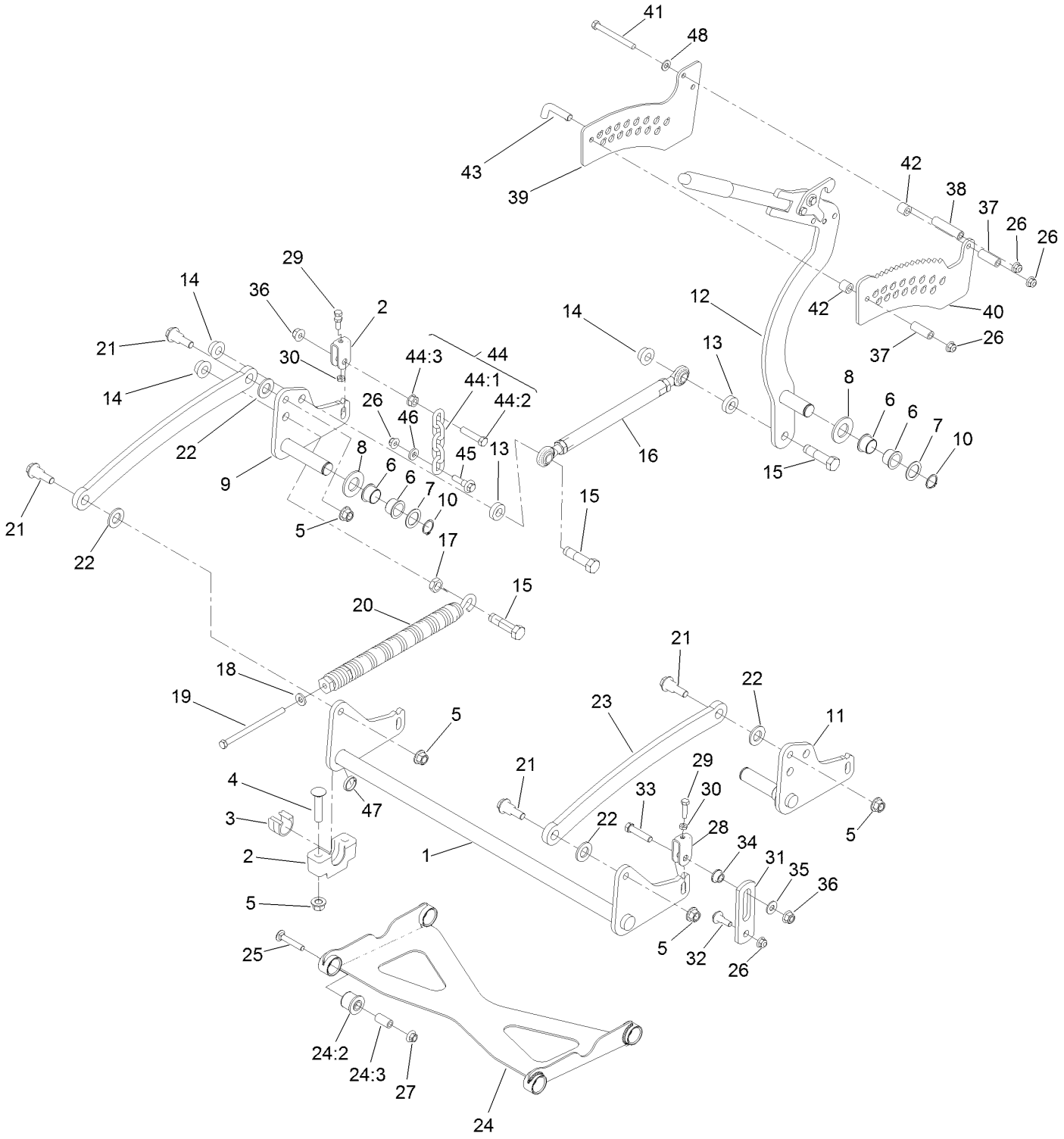

# Deck Lift Assembly (continued)

| Ref. | Part Number | Qty. | Description |
|---|---|---|---|
| 1 | 120-8405-01 | 1 | Shaft-Cross, Front |
| 2 | 109-9409 | 2 | Support-Bearing, Cross Shaft (Front) |
| 3 | 109-9410 | 2 | Bearing-Cross Shaft, Front |
| 4 | 116-1700 | 4 | Bolt-CARR |
| 5 | 99-5107 | 8 | Nut-Lock |
| 6 | 127-0369 | 6 | Bushing |
| 7 | 10-8110 | 3 | Washer-Thrust |
| 8 | 3256-62 | 3 | Washer-Flat |
| 9 | 120-8411-01 | 1 | Arm-Lift, RH |
| 10 | 32151-29 | 3 | Ring-Retaining |
| 11 | 120-8410-01 | 1 | Arm-Lift, LH |
| 12 | 130-1755 | 1 | HOC Lever ASM |
| 13 | 119-6223 | 2 | Washer |
| 14 | 138-4932 | 3 | Nut-Hex Flg |
| 15 | 138-4931 | 3 | Screw-Lock |
| 16 | 130-6615 | 1 | HOC Link ASM |
| 17 | 3218-6 | 1 | Nut-Jam |
| 18 | 98-5975 | 1 | Washer-Belleville |
| 19 | 323-58 | 1 | Bolt-TAP, HH |
| 20 | 116-0886 | 1 | Spring-Extension |
| 21 | 116-0780 | 4 | Screw-Shoulder, HHF |
| 22 | 3256-28 | 4 | Washer-Flat |
| 23 | 127-1948-03 | 2 | Link-Lift |
| 24 | 137-4129 | 1 | Deck Strut ASM |
| 24:2 | 137-4108 | 4 | Bushing-Rubber |
| 24:3 | 108-6544 | 4 | Spacer |
| 25 | 3231-7 | 4 | Screw-CARR |
| 26 | 104-8301 | 7 | Nut-HF, NI |
| 27 | 32128-19 | 4 | Nut-HF Lock,Large Flg |
| 28 | 109-9066 | 4 | Yoke-Adjust, Deck |
| 29 | 322-47 | 4 | Screw-HH |
| 30 | 3218-2 | 8 | Nut-Hex Jam |
| 31 | 130-6589 | 2 | Link-Lift |
| 32 | 109-9840 | 2 | Screw-Shoulder, HHF |
| 33 | 109-9065 | 2 | Screw-HH |
| 34 | 116-2428 | 2 | Bushing-Flanged |
| 35 | 3256-4 | 2 | Washer-Flat |
| 36 | 114-8417 | 4 | Nut-HF, NI |
| 37 | 95-6448 | 2 | Spacer |
| 38 | 138-1111 | 1 | Spacer |
| 39 | 132-7581 | 1 | HOC Plate And Decal ASM |
| 40 | 138-4887 | 1 | Plate-HOC, Inner |
| 41 | 323-42 | 3 | Screw-HH |
| 42 | 121-1760 | 2 | Spacer |
| 43 | 116-5584 | 1 | Pin-HOC |
| 44 | 116-0756 | 2 | Deck Lift Chain ASM |
| 44:1 | 1-633447 | 1 | Chain-Lift, Deck |
| 44:2 | 109-9065 | 1 | Screw-HH |
| 44:3 | 32128-37 | 1 | Nut-HF |
| 45 | 130-0742 | 2 | Bolt-Shoulder |
| 46 | 43-0940 | 2 | Spacer |
| 47 | 133-1431 | 1 | Spacer-Split |
| 48 | 3256-24 | 3 | Washer-Plain |

# HOC Lever Assembly No. 130-1755

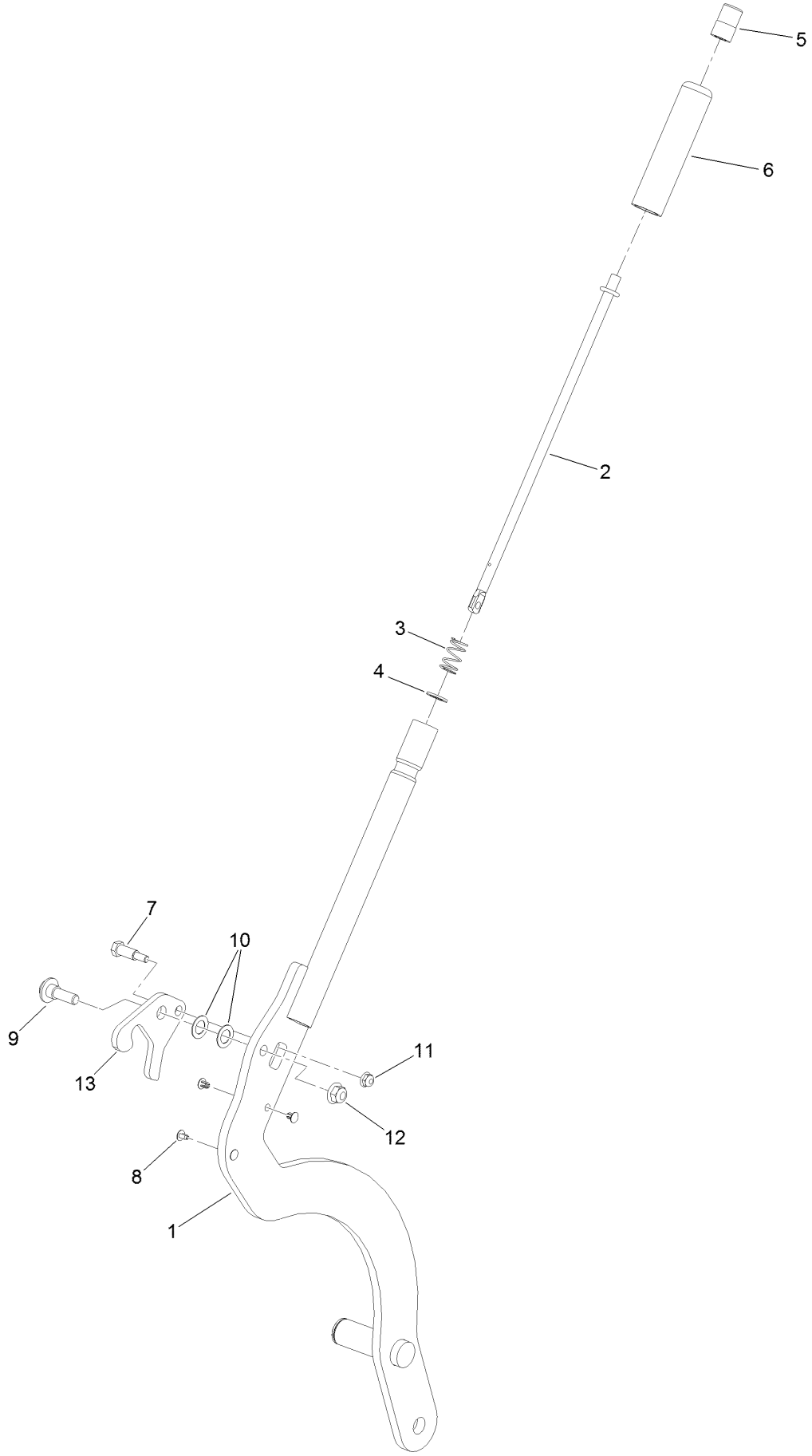

# HOC Lever Assembly No. 130-1755 (continued)

| Ref. | Part Number | Qty. | Description |
|---|---|---|---|
| 1 | 130-1775-01 | 1 | Lever-Lift |
| 2 | 136-0530 | 1 | Rod-Latch, Release |
| 3 | 114-8187 | 1 | Spring-Compression |
| 4 | 114-1207 | 1 | Washer-Special |
| 5 | 115-2750 | 1 | Knob |
| 6 | 115-3592 | 1 | Grip |
| 7 | 119-2309 | 1 | Bolt-Shldr,HH |
| 8 | 103-1363 | 4 | Rivet |
| 9 | 614672 | 1 | Screw-Shoulder, HWH |
| 10 | 98-1629 | 2 | Washer |
| 11 | 104-7201 | 1 | Nut-HF, NI |
| 12 | 104-8301 | 1 | Nut-HF, NI |
| 13 | 138-4888 | 1 | Latch-HOC |

# Frame Assembly

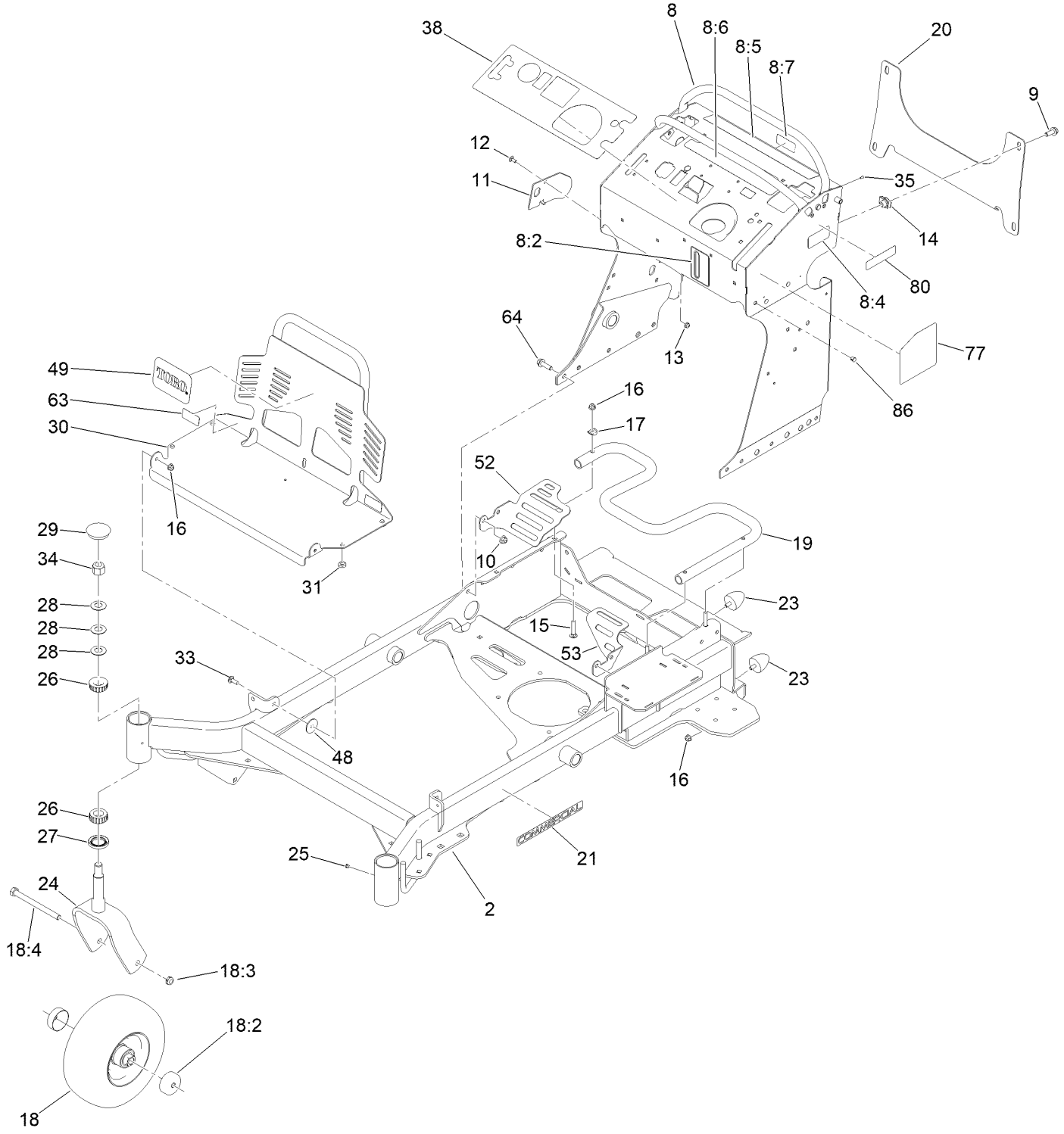

# Frame Assembly (continued)

| Ref. | Part Number | Qty. | Description |
|---|---|---|---|
| 2 | 131-7423-01 | 1 | Frame |
| 8 | 140-4283 | 1 | Tower Decal ASM |
| 8:2 | 131-3524 | 1 | Decal-Level, Oil |
| 8:4 | 116-8775 | 1 | Decal-Fill, Fuel |
| 8:5 | 139-2878 | 1 | Decal-Warning |
| 8:6 | 131-3526 | 1 | Decal-Controls |
| 8:7 | 131-3528 | 1 | Decal-Fuse |
| 9 | 3234-42 | 4 | Screw-HHF |
| 10 | 104-8301 | 8 | Nut-HF, NI |
| 11 | 131-7455 | 1 | Plate-Striker |
| 12 | 3229-11 | 1 | Screw-CARR |
| 13 | 104-7201 | 1 | Nut-HF, NI |
| 14 | 105-4886 | 4 | Nut-Tinnerman |
| 15 | 3230-5 | 3 | Bolt-CARR |
| 16 | 104-8300 | 9 | Nut-HF, NI |
| 17 | 107-3844 | 3 | Washer |
| 18 | 140-5485 | 2 | Mf Wheel Tire Bearing ASM |
| 18:2 | 103-2768 | 2 | Guard-Seal |
| 18:3 | 3296-45 | 1 | Nut-Hex |
| 18:4 | 325-20 | 1 | Screw-HH |
| 19 | 132-5161-01 | 1 | Tube-Mount, Fuel Tank |
| 20 | 132-1145-03 | 1 | Bracket-Cross |
| 21 | 117-3591 | 2 | Decal-Commercial |

| Ref. | Part Number | Qty. | Description |
|---|---|---|---|
| 23 | 114-1926 | 4 | Bumper-Rubber |
| 24 | 121-7988-01 | 2 | Fork-Caster |
| 25 | 1-811010 | 2 | Plug |
| 26 | 1-543509 | 4 | Bearing-Roller, Tapered |
| 27 | 116-5647 | 2 | Seal-Grease |
| 28 | 1-633508 | 6 | Washer-Bellville |
| 29 | 103-4882 | 2 | Cap-Grease |
| 30 | 132-5150-03 | 1 | Guard-Engine |
| 31 | 1-513658 | 4 | Bumper |
| 33 | 3230-10 | 2 | Bolt-CARR |
| 34 | 3296-51 | 2 | Nut-Lock, NI |
| 35 | 3290-271 | 2 | Rivet-Pop |
| 38 | 140-4258 | 1 | Decal-Panel, Control |
| 48 | 107-3002 | 2 | Washer-Nylon |
| 49 | 105-8278 | 1 | Decal |
| 52 | 132-7578-01 | 1 | Guard-Fan, RH |
| 53 | 132-7598-01 | 1 | Guard-Fan, LH |
| 63 | 133-4641 | 2 | Decal-Warning, No Riders |
| 64 | 119-4061 | 8 | Screw-HHF |
| 77 | 131-3529 | 1 | Decal-Service Aid |
| 80 | 133-8062 | 1 | Decal-Spark Arrestor |
| 86 | 145-3595 | 3 | Dome Panel Plug |

# Wheel and Bearing Assembly

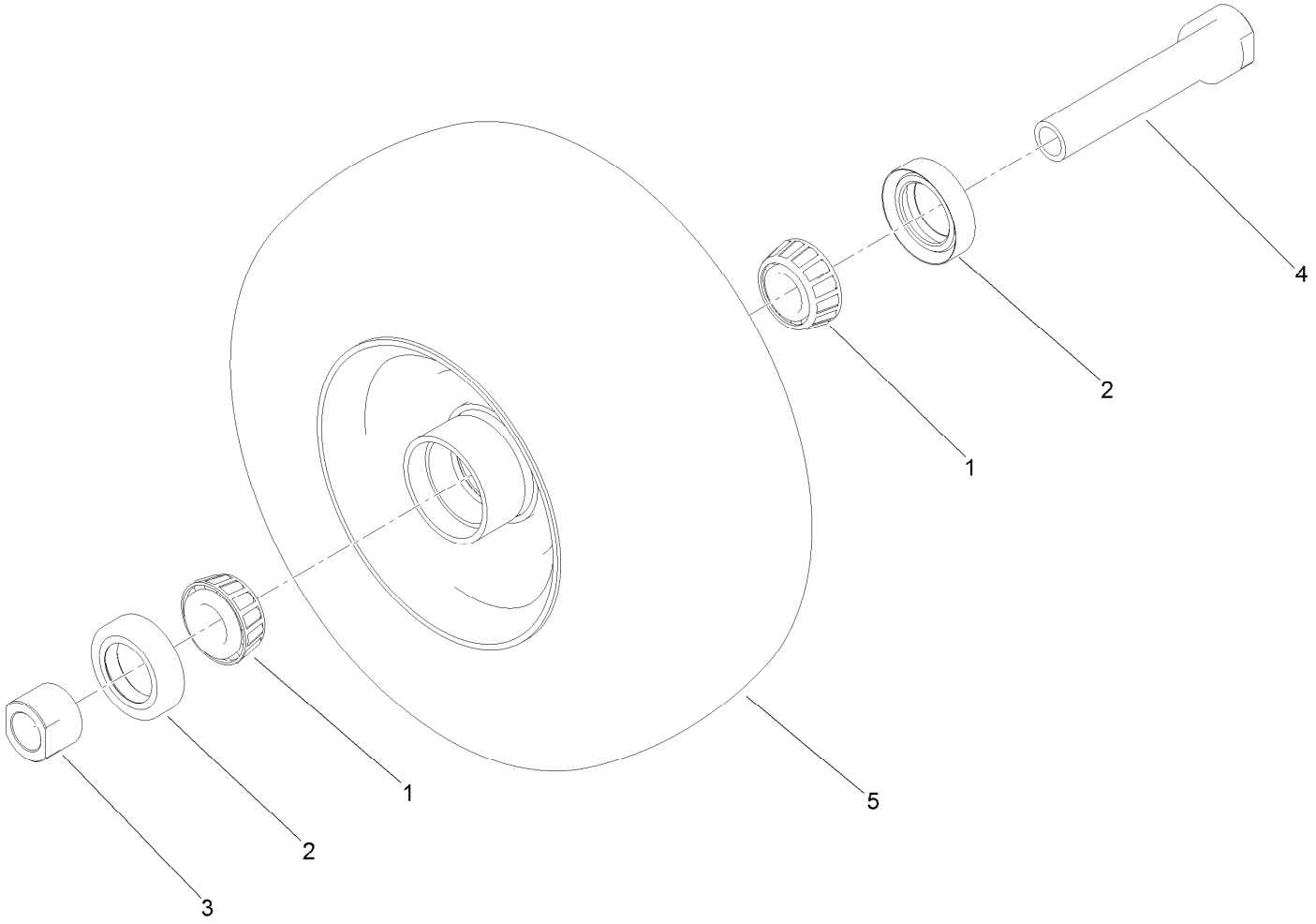

# Wheel and Bearing Assembly (continued)

| Ref. | Part Number | Qty. | Description |
|---|---|---|---|
| 1 | 1-633585 | 2 | Bearing-Cone, Taper |
| 2 | 103-0063 | 2 | Seal-Caster |
| 3 | 103-3051 | 1 | Spacer-Nut |
| 4 | 126-5359 | 1 | Caster Axle ASM |
| 5 | 140-5483 | 1 | Mf Wheel And Tire ASM |

# Platform Assembly

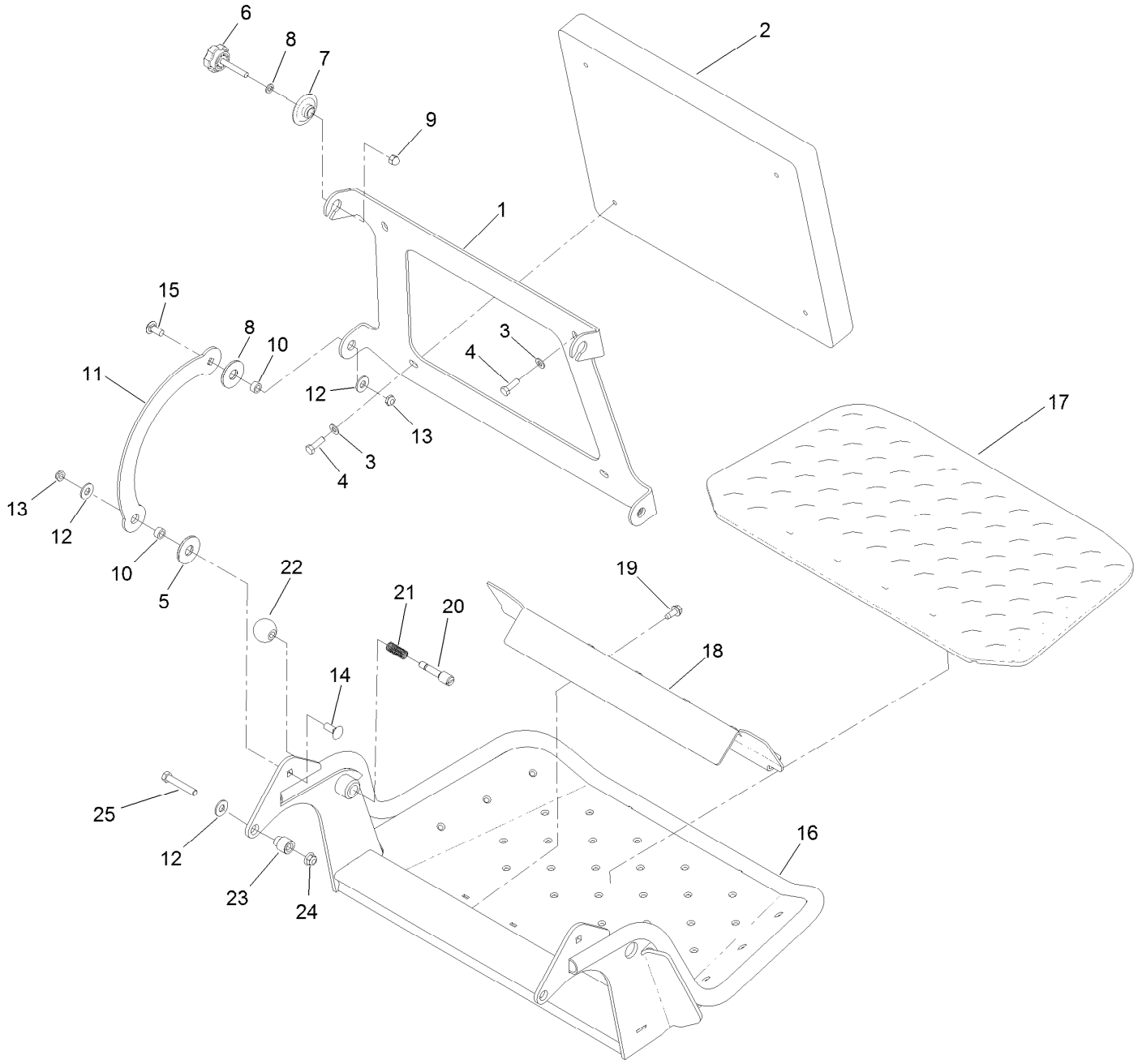

# Platform Assembly (continued)

| Ref. | Part Number | Qty. | Description |
|---|---|---|---|
| 1 | 120-8499-03 | 1 | Hinge-Pad |
| 2 | 117-9739 | 1 | Pad-Cushion |
| 3 | 3256-23 | 4 | Washer-Plain |
| 4 | 121-7999 | 4 | Screw-HH, Patch |
| 5 | 114-0463 | 4 | Washer-Friction, Composite |
| 6 | 133-1426 | 2 | Knob |
| 7 | 116-2886 | 2 | Slide-Bushing |
| 8 | 3253-4 | 2 | Washer-Lock |
| 9 | 137-4808 | 2 | Nut-Acorn |
| 10 | 111044 | 4 | Spacer |
| 11 | 114-1915-01 | 2 | Link-Pad |
| 12 | 3256-4 | 6 | Washer-Flat |
| 13 | 3296-59 | 4 | Nut-Lock, NI |
| 14 | 3231-2 | 2 | Bolt-CARR |
| 15 | 3231-27 | 2 | Screw-CARR |
| 16 | 120-8475-01 | 1 | Platform |
| 17 | 126-7157 | 1 | Mat-Platform |
| 18 | 3345-771 | 1 | Shield Clamp Kit |
| 19 | 32144-70 | 2 | Screw-HWHTF |
| 20 | 119-8650 | 1 | Pin-Latch |
| 21 | 114-5348 | 1 | Spring |
| 22 | 1-603175 | 1 | Knob-Ball |
| 23 | 132-7583 | 2 | Bushing-Flanged |
| 24 | 104-8301 | 2 | Nut-HF, NI |
| 25 | 323-45 | 2 | Screw-HH |

# Engine Assembly

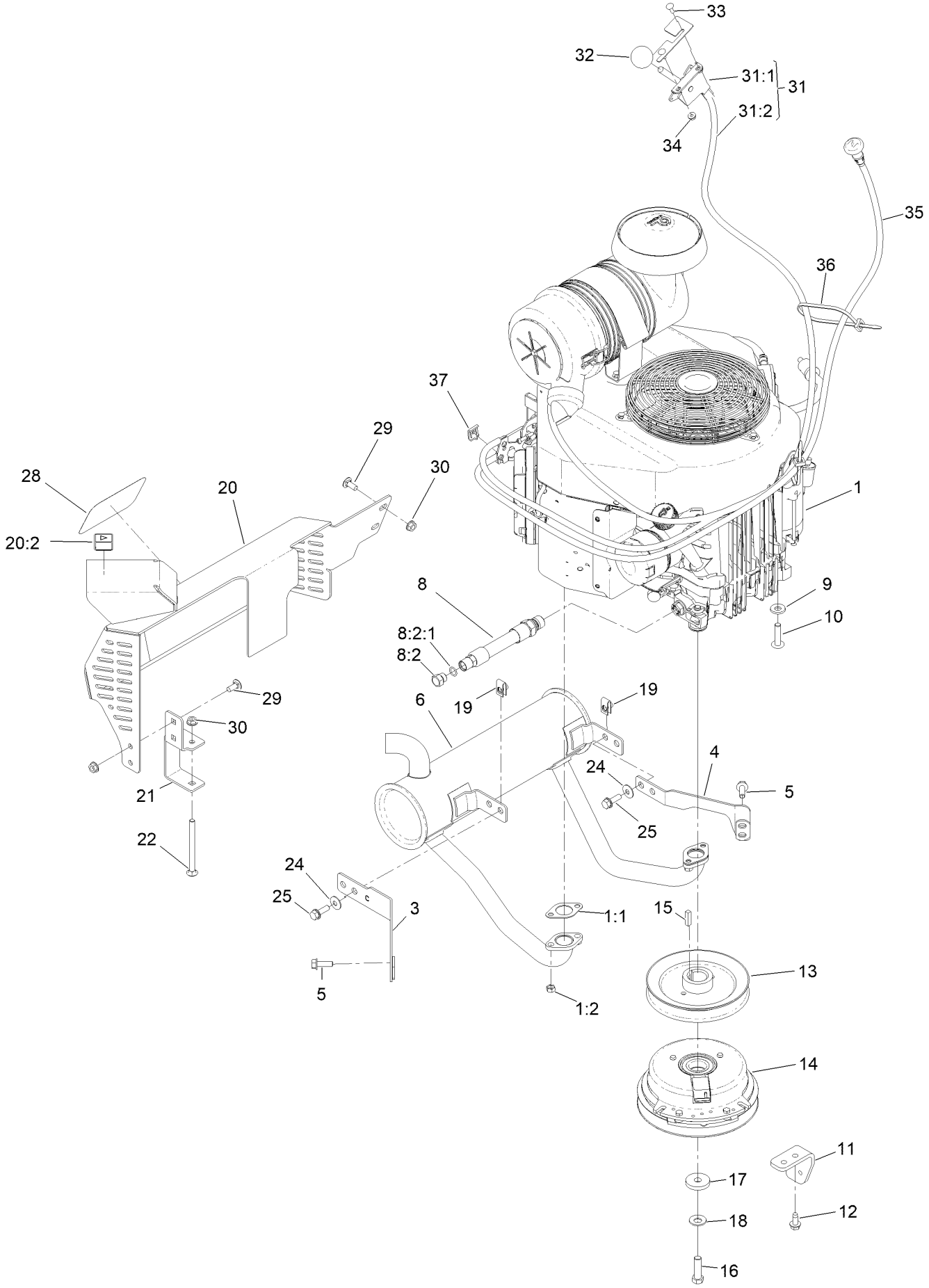

# Engine Assembly (continued)

| Ref. | Part Number | Qty. | Description |
|---|---|---|---|
| 1 | | 1 | Engine Kawasaki, Fx691V ■ ▲ |
| 1:1 | 1-653313 | 2 | Gasket-Exhaust |
| 1:2 | 114-3549 | 4 | Nut |
| 1:5 | 119-5945 | 1 | Element-Filter, Air (Inner) ● |
| 1:6 | 119-5944 | 1 | Element-Filter, Air (Outer) ● |
| 1:7 | 95-9853 | 1 | Bolt (5X18) ● |
| 3 | 132-1173 | 1 | Bracket-Muffler, Front |
| 4 | 132-1174 | 1 | Bracket-Muffler, Rear |
| 5 | 33104-025 | 4 | Screw-HHF |
| 6 | 133-4633 | 1 | Muffler |
| 8 | 133-4659 | 1 | Hose ASM |
| 8:2 | 353-508 | 1 | Plug-HH |
| 8:2:1 | 237-42 | 1 | O-Ring |
| 9 | 98-5975 | 4 | Washer-Belleville |
| 10 | 126-0983 | 4 | Screw-BHTF |
| 11 | 131-3586-03 | 1 | Stop-Clutch |
| 12 | 32144-70 | 2 | Screw-HWHTF |
| 13 | 120-8498 | 1 | Pulley |
| 14 | 139-7910 | 1 | Clutch-200Cms |
| 15 | 1-807259 | 1 | Key |
| 16 | 3212-6 | 1 | Screw-HH |
| 17 | 107-4136 | 1 | Washer-Flat |
| 18 | 1-603610 | 1 | Washer-Spring |
| 19 | 94-2413 | 4 | Nut-U |
| 20 | 131-3550 | 1 | Muffler Guard ASM |
| 20:2 | 106-5517 | 1 | Decal-Warning |
| 21 | 131-3530-03 | 1 | Bracket-Mounting, Guard |
| 22 | 106-9758 | 1 | Screw-CARR |
| 24 | 3290-456 | 4 | Washer-Belleville |
| 25 | 3234-29 | 4 | Screw-HHF |
| 28 | 94-2579 | 1 | Decal |
| 29 | 3230-23 | 4 | Bolt-CARR |
| 30 | 32128-25 | 5 | Nut-HF |
| 31 | 132-5152 | 1 | Throttle ASM |
| 31:1 | 110-5547 | 1 | Lever-Control |
| 31:2 | 132-5141 | 1 | Cable - Throttle |
| 32 | 1-603175 | 1 | Knob-Ball |
| 33 | 1-807533 | 2 | Bolt-CARR |
| 34 | 32128-17 | 2 | Nut-Lock, Flange |
| 35 | 132-5140 | 1 | Cable-Choke |
| 36 | 3290-378 | 2 | Tie-Cable |
| 37 | 81-1690 | 1 | Clamp-Cable |
| 39 | 121-4570 | 1 | Filter-Fuel ● |
| 40 | 119-5852 | 1 | Filter-Oil ● |

● Not illustrated
▲ Obtain parts from www.kawpower.com
■ Not serviced separately

# Fuel Tank Assembly

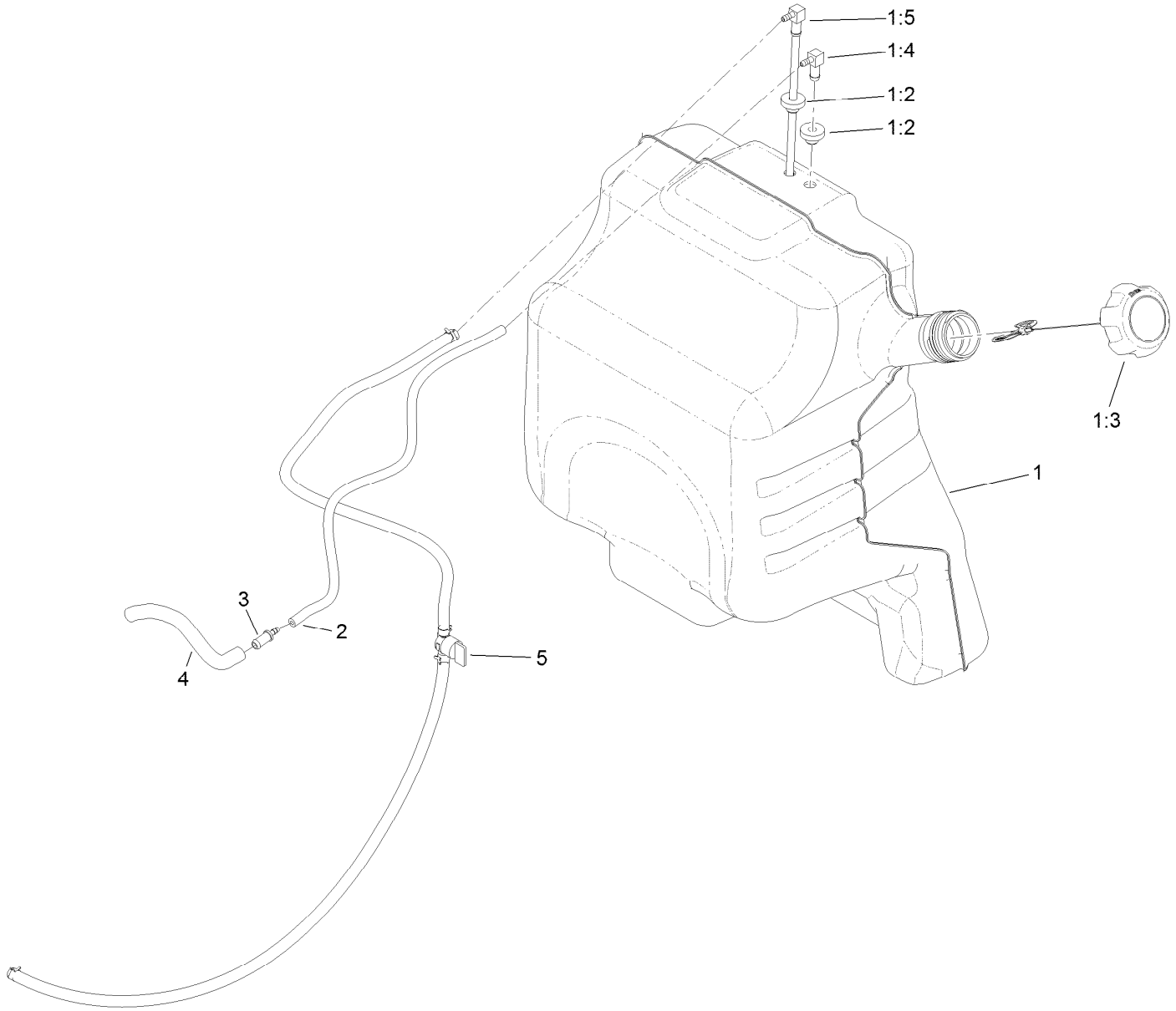

# Fuel Tank Assembly (continued)

| Ref. | Part Number | Qty. | Description |
|---|---|---|---|
| 1 | 132-7560 | 1 | Fuel Tank ASM |
| 1:2 | 46-6560 | 2 | Bushing |
| 1:3 | 137-4127 | 1 | Cap-Fuel |
| 1:4 | 104-5228 | 1 | Fitting-Elbow, 90 DEG |
| 1:5 | 132-7559 | 1 | *obs* Fuel Tube ASM |

| Ref. | Part Number | Qty. | Description |
|---|---|---|---|
| 2 | 110-8255 | 1 | Hose-Fuel |
| 3 | 98-2952 | 1 | Fitting-Straight |
| 4 | 132-7576 | 1 | Hose-Fuel |
| 5 | 132-7546 | 1 | Fuel Line ASM |

# Electrical Assembly

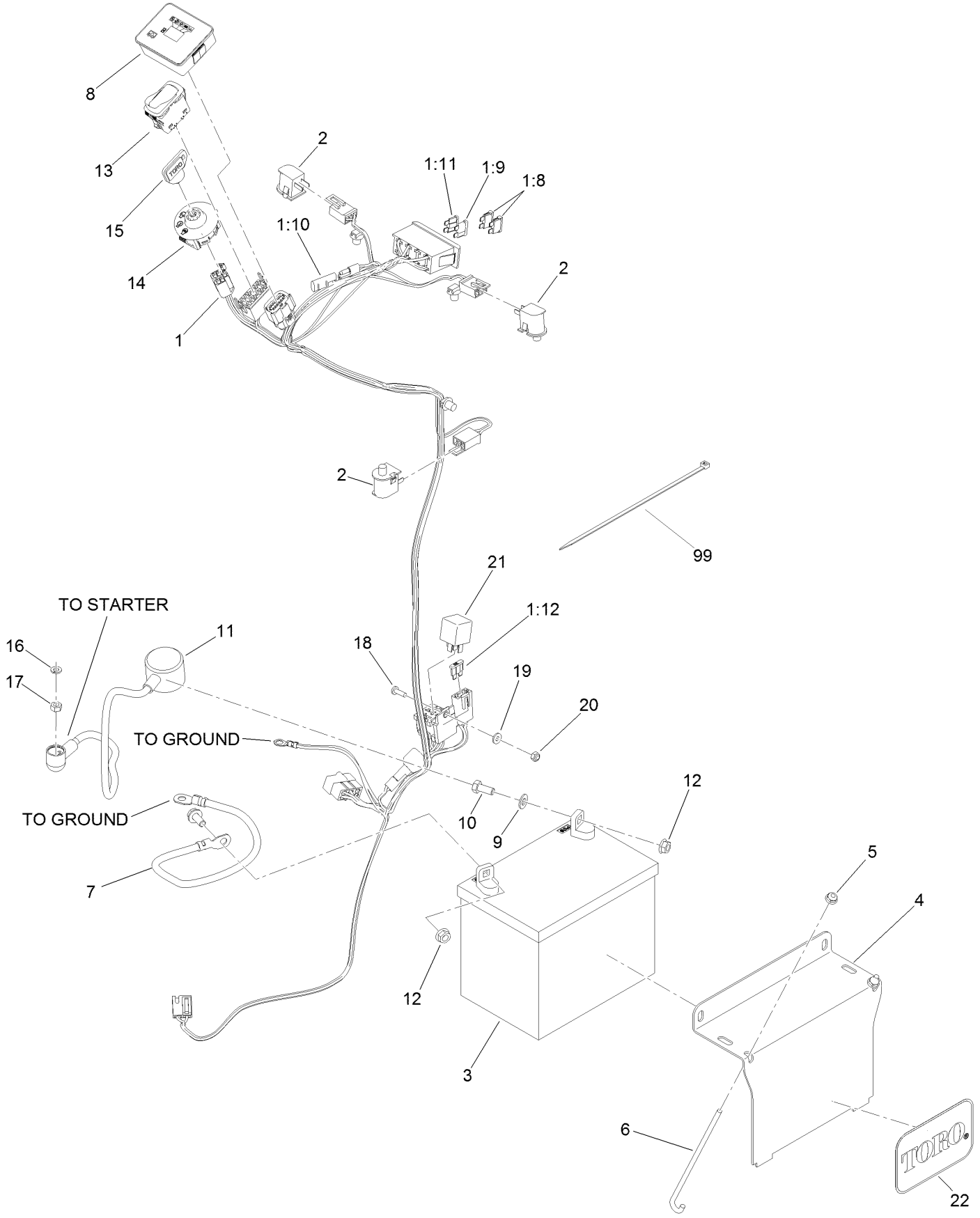

# Electrical Assembly (continued)

| Ref. | Part Number | Qty. | Description |
|---|---|---|---|
| 1 | 140-1879 | 1 | Harness-Wire |
| 1:8 | 109355 | 2 | Fuse-Blade, 15 Amp |
| 1:9 | 218-578 | 1 | Fuse-Blade, 10 Amp |
| 1:10 | 116-0053 | 1 | Cap-Plug |
| 1:11 | 114241 | 1 | Fuse-Blade, 7.5 Amp |
| 1:12 | 109103 | 1 | Fuse-Blade, 30 Amp |
| 2 | 82-2190 | 3 | Switch-Bail |
| 3 | 104-8162 | 1 | Battery |
| 4 | 130-6635-01 | 1 | Bracket-Hold Down, Battery |
| 5 | 104-7201 | 2 | Nut-HF, NI |
| 6 | 1-633651 | 2 | Bolt-Holddown |
| 7 | 112-7063 | 1 | Cable-Battery, Black |
| 8 | 140-1884 | 1 | Module-Meter, Hour |
| 9 | 3256-23 | 2 | Washer-Plain |
| 10 | 322-3 | 2 | Screw-HH |
| 11 | 115-3864 | 1 | Cable-Battery, Positive |
| 12 | 109-5715 | 2 | Nut-HHF, Smooth |
| 13 | 139-6367 | 1 | Switch-Rocker, (On)-On-Off |
| 14 | 137-4101 | 1 | Switch-Ignition |
| 15 | 63-8360 | 1 | Key-Ignition |
| 16 | 3253-3 | 1 | Washer-Lock |
| 17 | 3217-5 | 1 | Nut-Hex |
| 18 | 3290-500 | 1 | Screw-PPH |
| 19 | 3256-14 | 1 | Washer-Flat |
| 20 | 3296-2 | 1 | Nut-Lock, NI |
| 21 | 1-643275 | 1 | Relay |
| 22 | 67-1300 | 1 | Decal |
| 99 | 3290-378 | 4 | Tie-Cable |

# Attachments and Accessories

## For 72505 GrandStand Mower With 52in TURBO FORCE Cutting Unit

| Product Name | Model/Part |
|---|---|
| Turbo Baffle Kit | 107-1634 |
| 15-Pound Cast Weight | 112-7059-01 |
| Hypr-Oil 500 (quart) | 114-4713 |
| Hypr-Oil 500 (gallon) | 114-4714 |
| Hypr-Oil 500-5 (5 gallon) | 114-4715 |
| Oil Filter | 119-5852 |
| Element-Filter, Air (Outer) | 119-5944 |
| Element-Filter, Air (Inner) | 119-5945 |
| Fuel Filter | 120-2235 |
| Harness Wire Splitter | 121-5988 |
| Toro Premium Fuel Treatment 12oz Bottle | 131-6572 |
| Speed Setting Tool | 132-7595 |
| Stand-On Weight Kit | 133-1428 |
| Chute Gate Kit W/ Bag | 133-1434 |
| Trash Bag Assembly | 133-1435 |
| Roller Striper Kit | 133-1436 |
| Light Kit | 133-1437 |
| Electric Accessory Port | 133-1438 |
| HOC Set Blocks | 133-1439 |
| Anti-Scalp Kit, 48/52 Grandstand Deck | 133-1440 |
| Trimmer Rack | 133-1441 |
| Hydro Oil Change Kit | 133-1457 |
| Strobe Light Kit | 133-1495 |
| 5 Gallon Bucket | 133-2533 |
| Hydraulic Cap Lock Kit | 136-5420 |
| Bucket Mount Kit | 136-5681 |
| Bagger Enhancement Kit | 139-1529 |
| Recycler Kit | 139-6653 |
| 18x8.5n10 X-Tweel Turf | 139-7890 |
| 6in Hose Kit, E-Z Vac Twin Bagger, 2016 and After Grandstand Mower | 139-7930 |
| Blower Upgrade Kit, Twin Bagger, 2016 and After Grandstand Mower | 139-7940 |
| Blade-18.00 High Flow | 140-1242 |
| Pneumatic Castor Wheel Kit | 140-4311 |
| Blade-18.00 Medium Flow | 140-4856 |
| Blade-18.00 Low Flow | 140-4857 |
| Blade-18.00 Atomic | 140-4858 |
| Blade-18.00 Recycler | 140-4859 |
| 6 Pack-Blade, 18.00 High Flow | 140-4882 |
| 6 Pack-Blade, 18.00 Med Flow | 140-4883 |
| 6 Pack-Blade, 18.00 Low Flow | 140-4884 |
| 6 Pack-Blade, 18.00 Atomic | 140-4885 |
| 6 Pack-Blade, 18.00 Recycler | 140-4886 |
| 2 Transmission Filter Kit | 144-3842 |
| Soft Bag (3 Bushel) | 30104 |
| 10W30 4-Cycle Engine Oil (32oz Bottle) | 38280 |
| Toro 4-Cycle SAE 30 Oil (32oz Bottle) | 38903 |

# Attachments and Accessories (continued)

Twin Bagger Kit..... 78524
Blower Drive 52in..... 78526
Spark Plug ..... 92-2153
Spark Arrestor ..... 98-9099

**Notes:**

**Notes:**

TORO®

Count on it.