Form No. 3471-719 Rev B

TORO®

Count on it.

Parts Catalog

GrandStand® Mower

With 52in TURBO FORCE® Cutting Unit

Model No. 72505—Serial No. 417500000 and Up

Register at www.Toro.com.
Original Instructions (EN)

3471-719 B

Ordering Replacement Parts

To order replacement parts, please supply the part number, the quantity, and the description of each part desired.

Understanding Reference Numbers

Each identified part in an illustration has a reference number. The reference number for a part also appears in the parts list, along with other information about the part.

This catalog uses two special reference number formats, one to indicate parts in a service assembly and another to indicate the quantity of a given part in an illustration.

Service Assembly Reference Numbers

Parts in service assemblies have reference numbers in the form a:b. The a represents the reference number of the entire service assembly and the b represents a sequential number unique to each part within the service assembly.

For example, a wheel assembly might be identified by reference number 6, the tire by 6:1, the valve by 6:2, and the wheel by 6:3. When you order the assembly identified by reference number 6, you receive all parts identified by reference numbers 6:1,6:2, and 6:3. However, you may also order any part individually. Reference numbers of this type appear in illustration and in parts lists.

Reference Numbers Indicating Quantity

In an illustration, if a reference number indicates more than one part, the reference number has the form nX y. The n represents the quantity of the part, the X is the multiplication symbol, and the y represents the reference number.

For example, in an illustration, the reference number 2X 37 means that two of the parts identified by reference number 37 are indicated.

Contents

52 Inch Deck Assembly 4
Deck and Decal Assembly No. 139-8097 6
Spindle Assembly No. 137-9780 8
Deflector Assembly No. 163-4031 10
Ground Drive Assembly 12
LH Transmission Assembly No. 138-5838 14
RH Transmission Assembly No. 138-5839 16
Overflow Hose Assembly 18
Motion Control Assembly 20
Control Handle Assembly No. 132-5157 22
Control Handle Assembly No. 132-5158 24
Parking Brake Assembly 26
Deck Lift Assembly 28
HOC Lever Assembly No. 161-6735 30
HOC Link Assembly No. 130-6615 32
Frame Assembly 34
Wheel and Bearing Assembly 36
Platform Assembly 38
Engine Assembly 40
Fuel Tank Assembly 42
Electrical Assembly 44
Attachments and Accessories 46

© 2024—The Toro® Company
8111 Lyndale Avenue South
Bloomington, MN 55420

Contact us at www.Toro.com.
Printed in the USA.
All Rights Reserved

52 Inch Deck Assembly

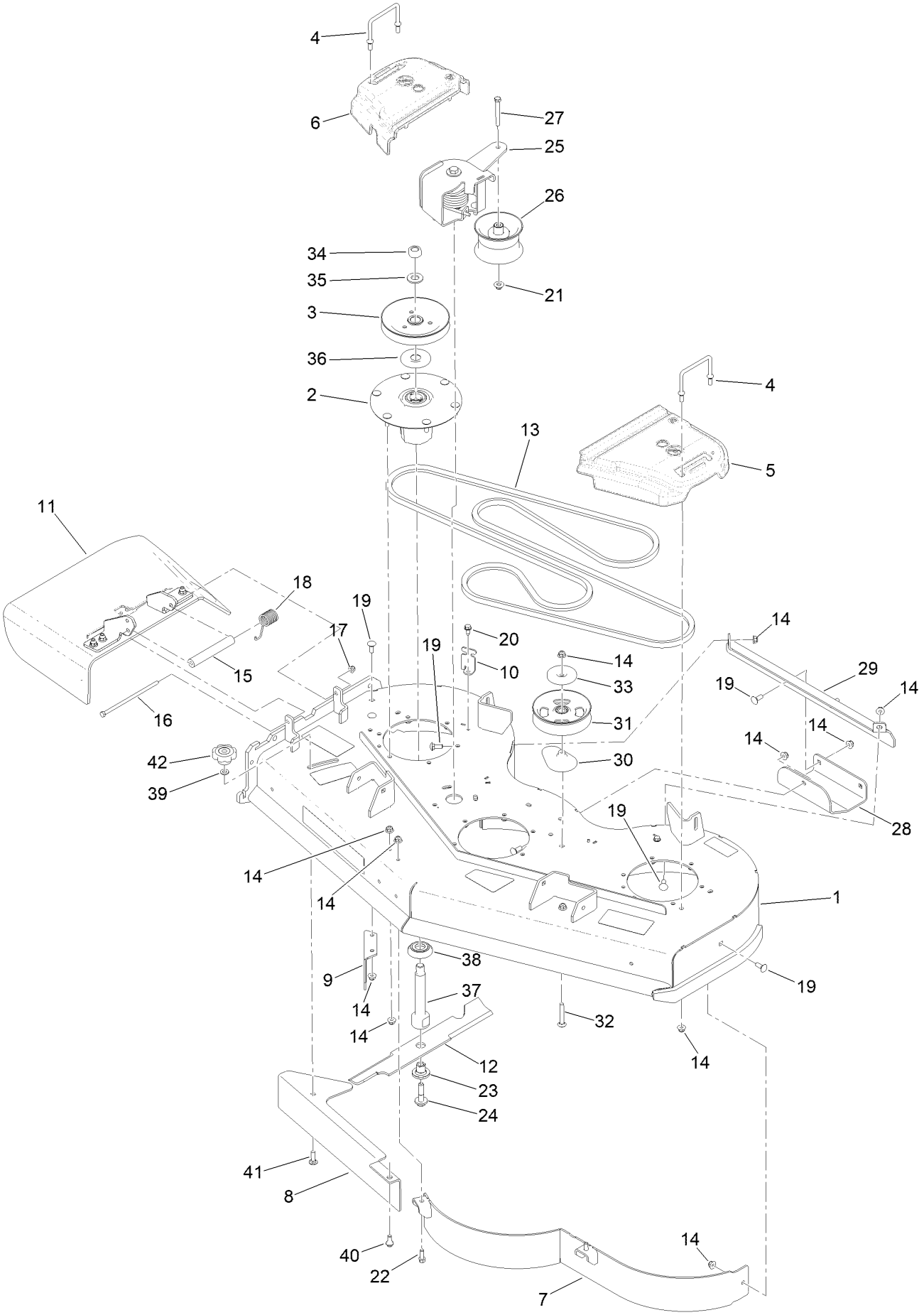

52 Inch Deck Assembly (continued)

Ref.	Part Number	Qty.	Description
1	139-8097	1	52 Deck ASM
2	137-9780	3	Spindle ASM
3	138-6061	3	Sheave-Blade, Drive
4	109-6982	3	Wireform-Cover
5	109-6936	1	Cover-Belt, LH
6	109-6935	1	Cover-Belt, RH
7	114-1979-01	1	Baffle-52 Inch
8	139-8105-01	1	Plate-Baffle, Formed [red]
9	130-6594-01	1	Baffle-Discharge
10	117-5758-05	4	Bracket-Cover
11	163-4031	1	Rubber Deflector ASM
12	140-1242	3	Blade-Flow, High
13	131-1122	1	Belt-V
14	104-8301	39	Nut-HF, NI
15	105-4622	1	Spacer
16	322-50	1	Screw-HH
17	104-8300	1	Nut-HF, NI
18	108-4052	1	Spring-Torsion
19	3231-2	8	Bolt-CARR
20	32144-70	4	Screw-HWHTF
21	109-6658	1	Nut-Flange, NI

Ref.	Part Number	Qty.	Description
22	92-1624	2	Screw-HWH Thd Form
23	137-9787	3	Bushing-Hex
24	109-9220	3	Screw-Sems
25	145-3450	1	Gs Torsion Idler ASM Ii
26	127-1971	1	Pulley-Idler
27	323-20	1	Screw-HH
28	114-1908-01	1	Skid
29	130-6648-01	1	Bracket-Skid
30	109-2872	1	Spacer-Pulley
31	136-5405	1	Pulley-Idler, Flat
32	3231-44	1	Screw-CARR
33	132-5153	1	Shield-Dust
34	116-7306	3	Nut-Hex
35	103-2802	3	Washer
36	103-1330	3	Guard-Bearing, Top
37	138-6045	3	Shaft-Spindle
38	137-9784	3	Guard-Bottom
39	100-4852	1	Washer-Hardened
40	94-7582	1	Bolt-Shoulder
41	3231-25	1	Bolt-CARR
42	109-1092	1	Knob

Deck and Decal Assembly No. 139-8097

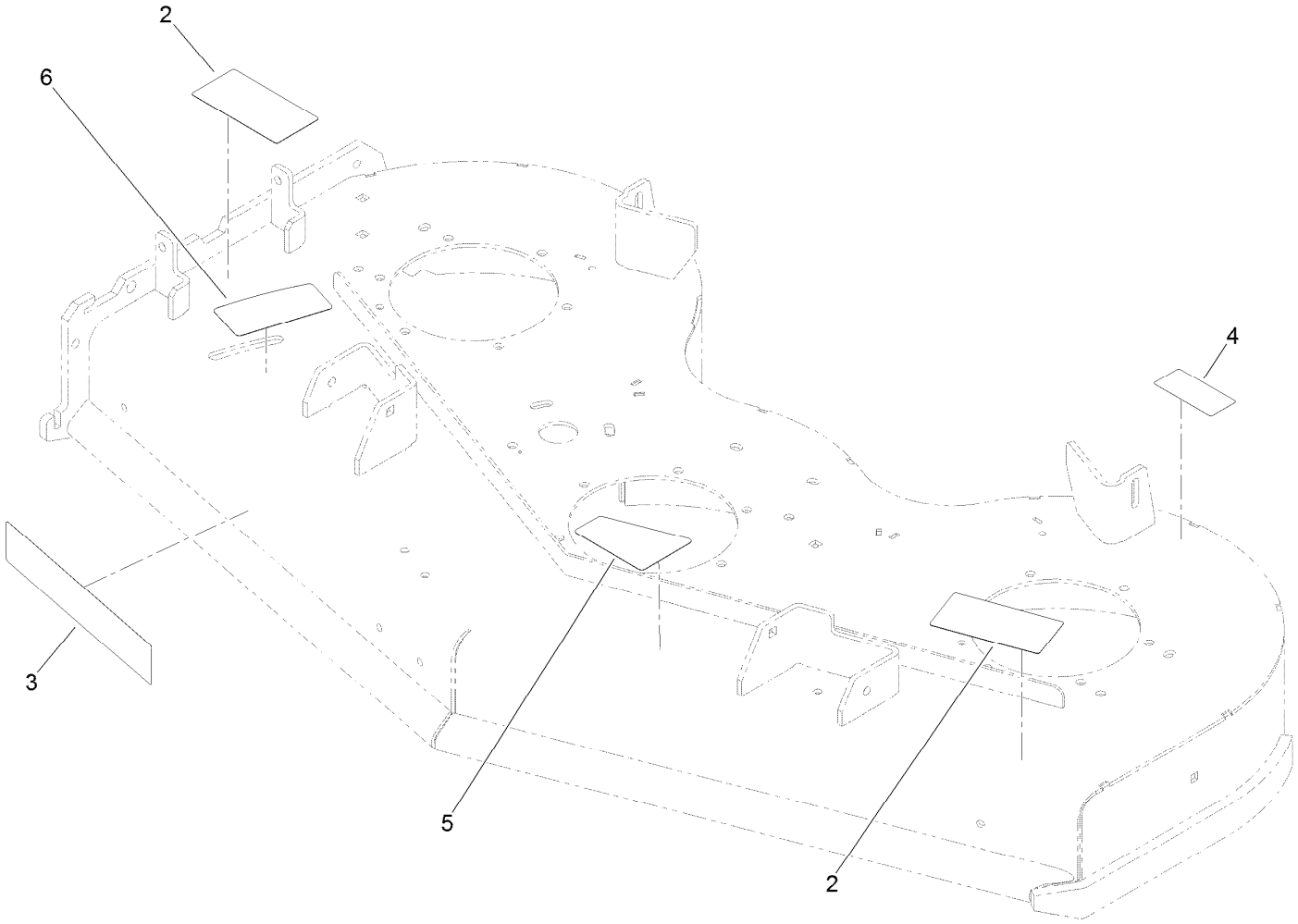

Deck and Decal Assembly No. 139-8097 (continued)

Ref.	Part Number	Qty.	Description
2	133-4604	2	Decal-Danger
3	107-1618	1	Decal
4	116-8283	1	Decal-Torque, Bolt
5	131-3507	1	Decal-Belt, Tension (CE)
6	138-1147	1	Decal - Baffle Adjustment

Spindle Assembly No. 137-9780

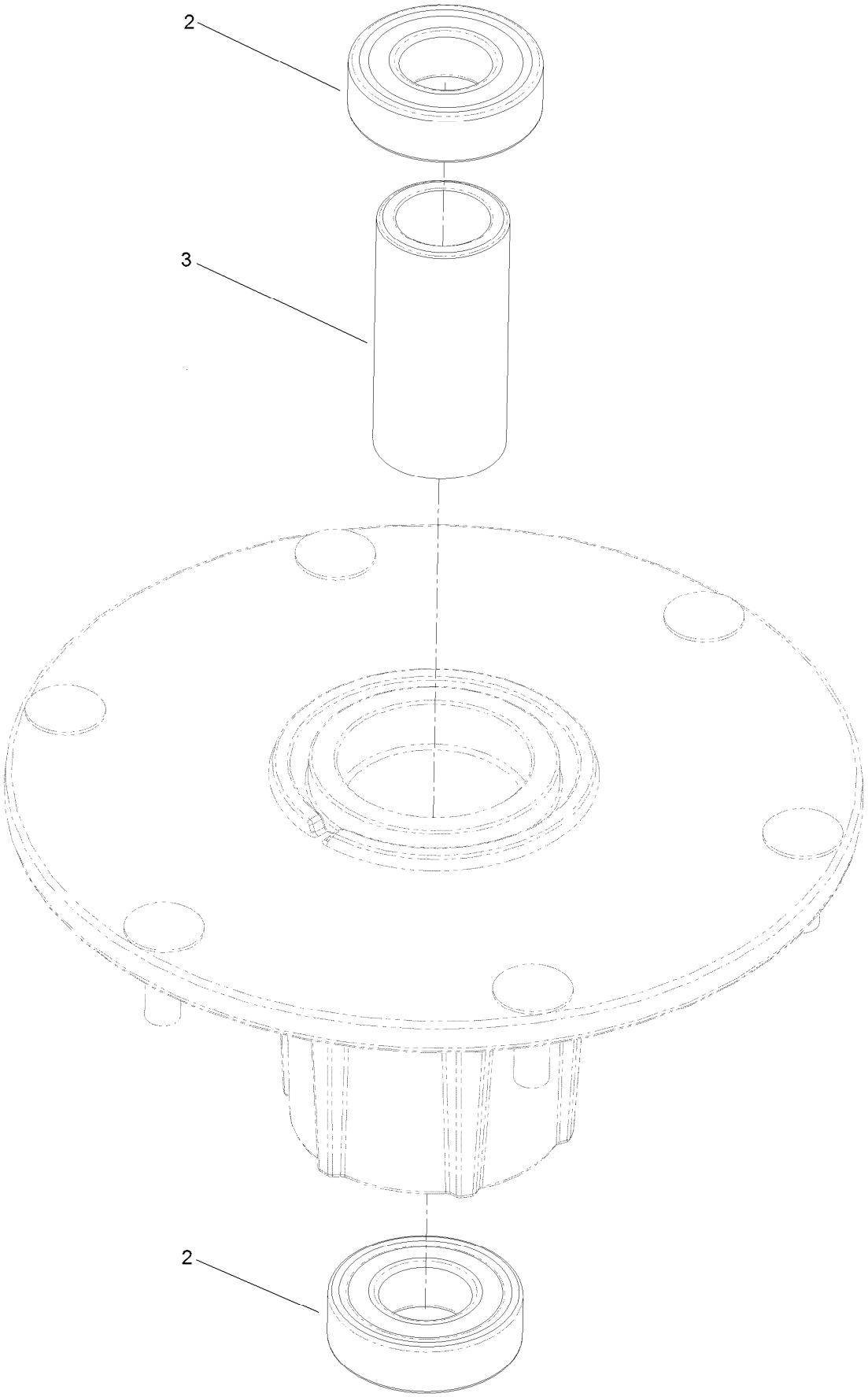

Spindle Assembly No. 137-9780 (continued)

Ref.	Part Number	Qty.	Description
2	116-0720	2	Bearing-Ball
3	138-6042	1	Spacer-Bearing

Deflector Assembly No. 163-4031

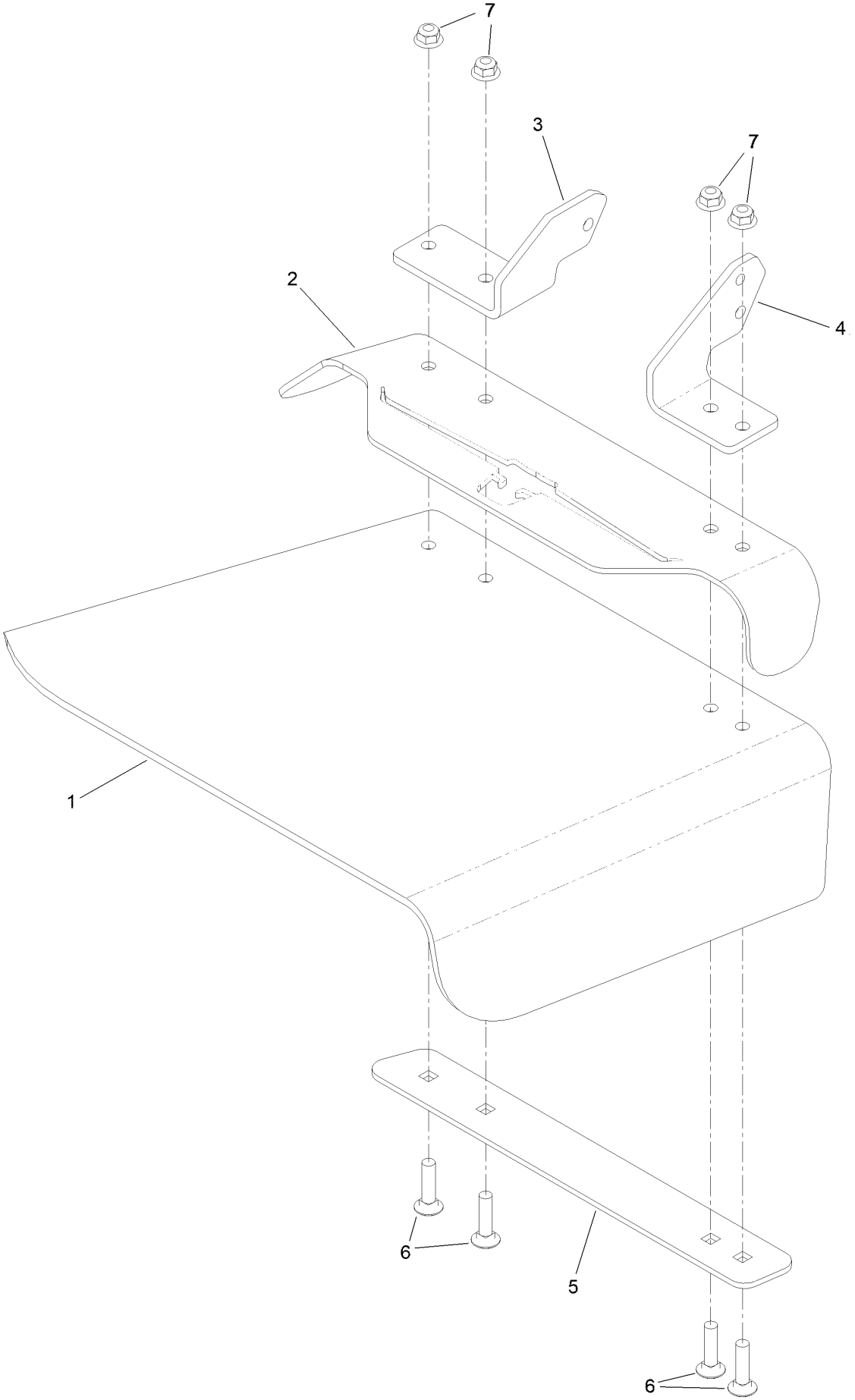

Deflector Assembly No. 163-4031 (continued)

Ref.	Part Number	Qty.	Description
1	110-0759	1	Deflector-Rubber
2	161-9815-01	1	Plate-Deflector Mount
3	108-4059-01	1	Plate-Hinge, Rear
4	106-3253-01	1	Plate-Hinge, Front
5	106-3248-03	1	Strap-Discharge
6	3231-5	4	Screw-CARR
7	104-8301	4	Nut-HF, NI

Ground Drive Assembly

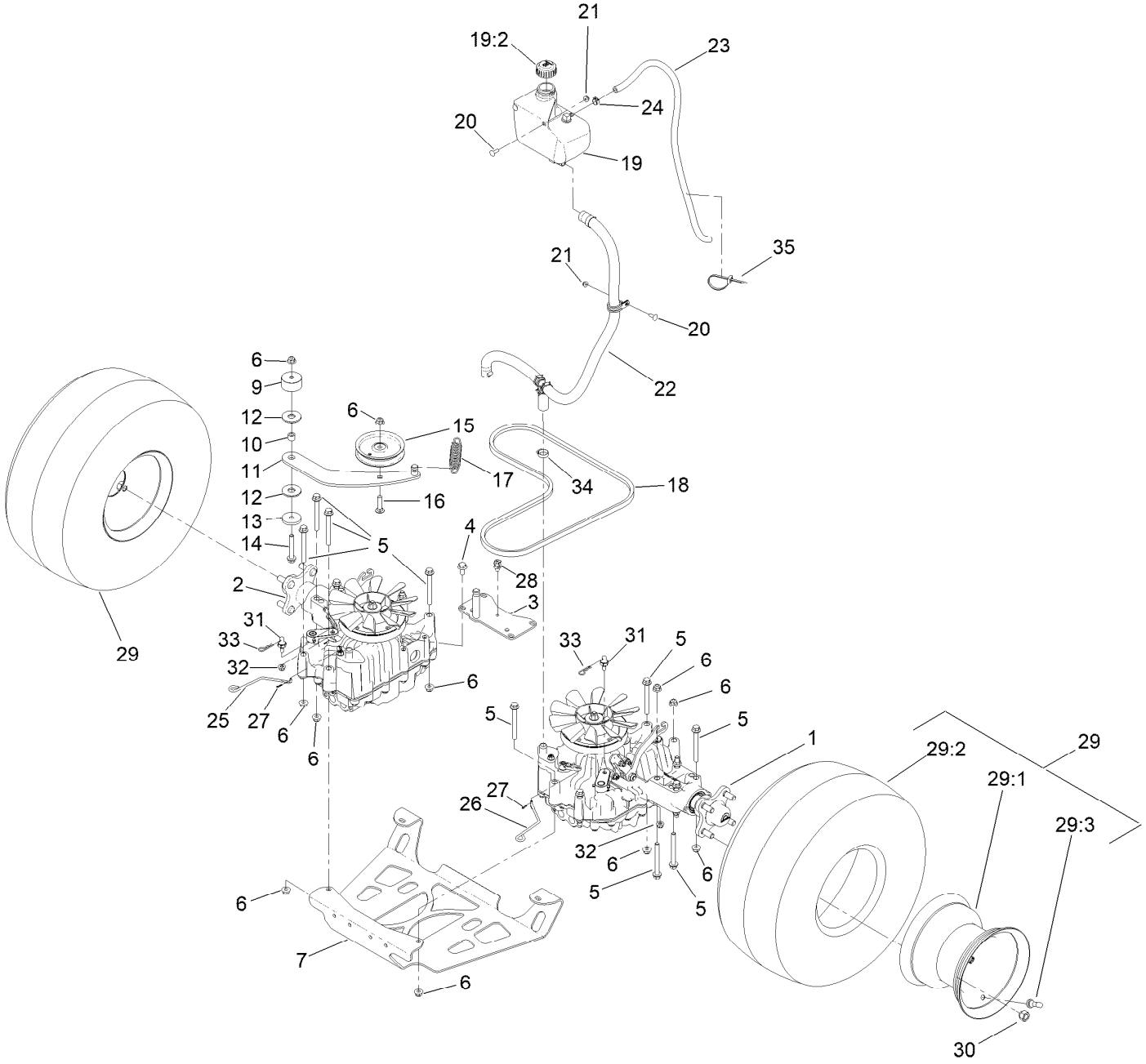

Ground Drive Assembly (continued)

Ref.	Part Number	Qty.	Description
1	138-5838	1	LH Transmission ASM
2	138-5839	1	RH Transmission ASM
3	131-1131-05	1	Transaxle Support ASM [blk-Txt]
4	93-2569	4	Screw-HHF
5	116-4701	16	Screw-HHF
6	104-8301	18	Nut-HF, NI
7	138-1108-05	1	Skid Plate
9	117-5351	1	Spacer
10	1-413088	1	Bushing-Lever, Lift
11	131-1175	1	Arm-Idler
12	114-0463	2	Washer-Friction, Composite
13	110-9981	1	Washer-Plain
14	3234-39	1	Screw-HHF
15	93-1622	1	Pulley-Idler
16	3231-4	1	Screw-CARR
17	138-1104	1	Spring-Extension
18	131-1124	1	Belt-V
19	132-1135	1	Tank-HYD
19:2	133-8677	1	Cap-Vented

Ref.	Part Number	Qty.	Description
19:5	140-9463	1	Strainer-Neck, Removable ●
20	3229-25	3	Screw-CARR
21	104-7201	3	Nut-HF, NI
22		1	Gs Overflow Hose ASM ■
23	109-0309	1	Hose-Fuel
24	92-2379	1	Clamp-Hose
25	131-7469	1	Rod-Bypass, RH
26	131-7470	1	Rod-Bypass, LH
27	108-2992	2	Pin-Hair
28	32180-030	1	Clip-Tie
29	140-1888	2	Wheel And Tire ASM
29:1	140-1889	1	Rim-8 Inch Black
29:2	120-6466	1	Tire
29:3	232-27	1	Stem-Valve
30	139-2564	8	Nut-Lug
31	132-7584	2	Spacer-Hex
32	104-8300	2	Nut-HF, NI
33	3290-250	2	Pin-Cotter
34	2412-129	2	Clamp-Hose
35	3290-378	1	Tie-Cable

● Not illustrated

■ Not serviced separately

LH Transmission Assembly No. 138-5838

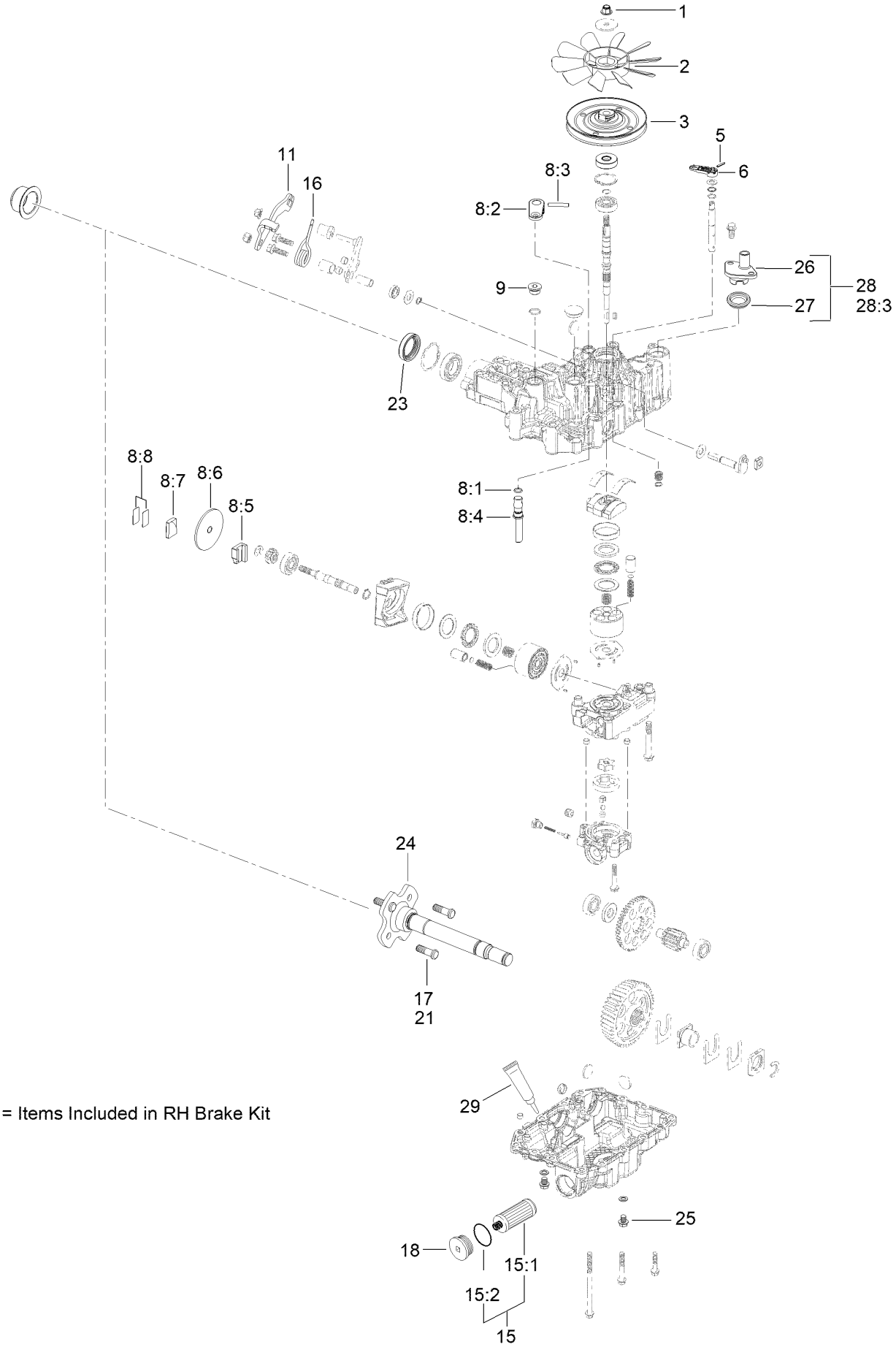

8 = Items Included in RH Brake Kit

LH Transmission Assembly No. 138-5838 (continued)

Ref.	Part Number	Qty.	Description
1	132-4737	1	Nut-Lock
2	132-4738	1	Fan
3	132-4739	1	Pulley
5	104-3265	1	Pin
6	132-4700	1	Lever-Bypass
8	133-1468	1	Brake Kit,Left
8:1		1	O-Ring ●
8:2		1	Arm-Brake ●
8:3		1	Pin-Roll ●
8:4		1	Shaft-Brake ●
8:5		1	Actuator-Brake ●
8:6		1	Disc-Brake ●
8:7		1	Shoe-Brake ●
8:8		1	Shim Kit ●
9	132-4735	1	Cap-Oil
11	136-5401	1	Lever-Control, RH

Ref.	Part Number	Qty.	Description
15	132-4743	1	Hydro Filter Kit
15:1	136-5409	2	Filter
15:2	136-5410	2	O-Ring
16	137-4109	1	Spring-Torsion
17	137-9509	4	Stud-Wheel
18	138-4613	1	Cap-Oil Filter
21	137-9509	1	Stud-Wheel
23	139-5587	1	Seal-Axle, Ua
24	139-5588	1	Axle
25	139-5589	2	Drain Bolt
26	139-5590	1	Expansion Fitting
27	139-5591	1	Grommet Seal, Expansion Fitting
28	139-7871	1	Expansion Fitting - W/ Seal
28:3		1	M8*20 Flange Bolt ●
29	138-4628	1	Seal Kit

● Not serviced separately

RH Transmission Assembly No. 138-5839

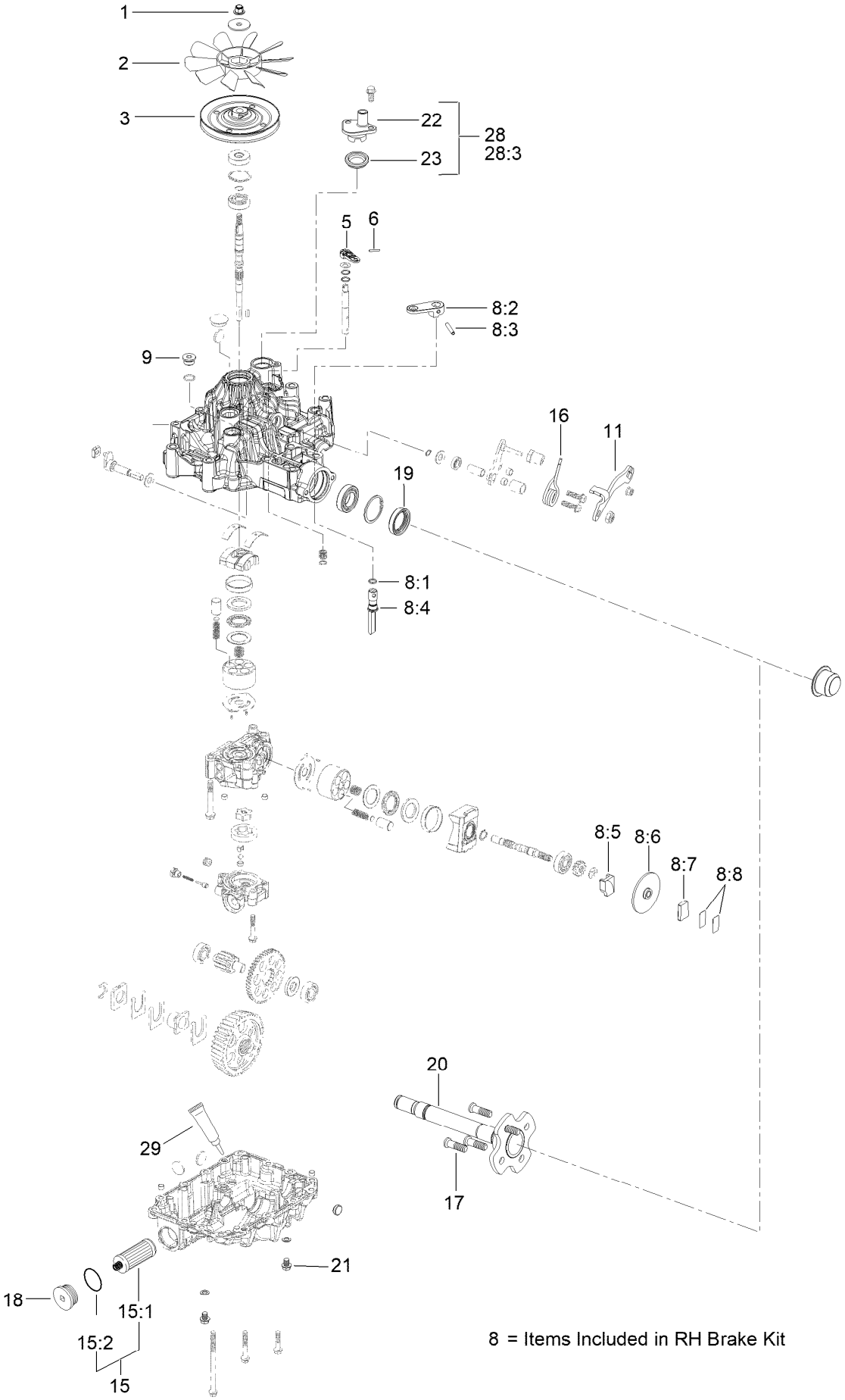

RH Transmission Assembly No. 138-5839 (continued)

Ref.	Part Number	Qty.	Description
1	132-4737	1	Nut-Lock
2	132-4738	1	Fan
3	132-4739	1	Pulley
5	104-3265	1	Pin
6	132-4700	1	Lever-Bypass
8	133-1462	1	RH Brake Kit
8:1		1	O-Ring ●
8:2		1	Arm-Brake ●
8:3		1	Pin-Roll ●
8:4		1	Shaft-Brake ●
8:5		1	Actuator-Brake ●
8:6		1	Disc-Brake ●
8:7		1	Shoe-Brake ●
8:8		1	Shim Kit ●
9	132-4735	1	Cap-Oil
11	136-5401	1	Lever-Control, RH

Ref.	Part Number	Qty.	Description
15	132-4743	1	Hydro Filter Kit
15:1	136-5409	2	Filter
15:2	136-5410	2	O-Ring
16	137-4109	1	Spring-Torsion
17	137-9509	4	Stud-Wheel
18	138-4613	1	Cap-Oil Filter
19	139-5587	1	Seal-Axle, Ua
20	139-5588	1	Axle
21	139-5589	2	Drain Bolt
22	139-5590	1	Expansion Fitting
23	139-5591	1	Grommet Seal, Expansion Fitting
28	139-7871	1	Expansion Fitting - W/ Seal
28:3		1	M8*20 Flange Bolt ●
29	138-4628	1	Seal Kit

● Not serviced separately

Overflow Hose Assembly

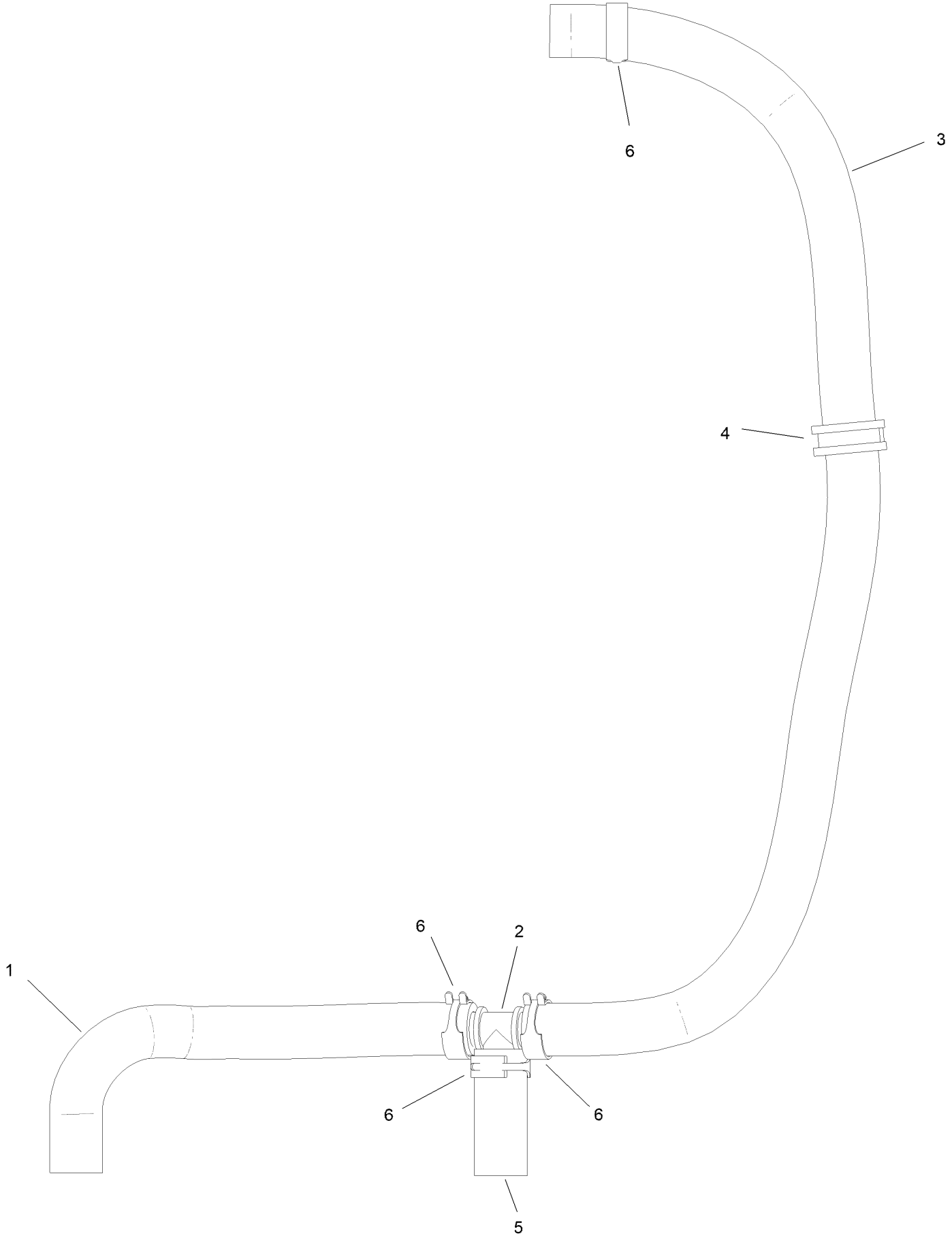

Overflow Hose Assembly (continued)

Ref.	Part Number	Qty.	Description
1	145-3444	1	Hose-Hydraulic
2	139-4055	1	Fitting Tee
3	147-0202	1	Hydraulic Hose
4	147-0201	1	R-Clamp
5	147-0204	1	Hydraulic Hose
6	145-3599	4	Hose Clamp

Motion Control Assembly

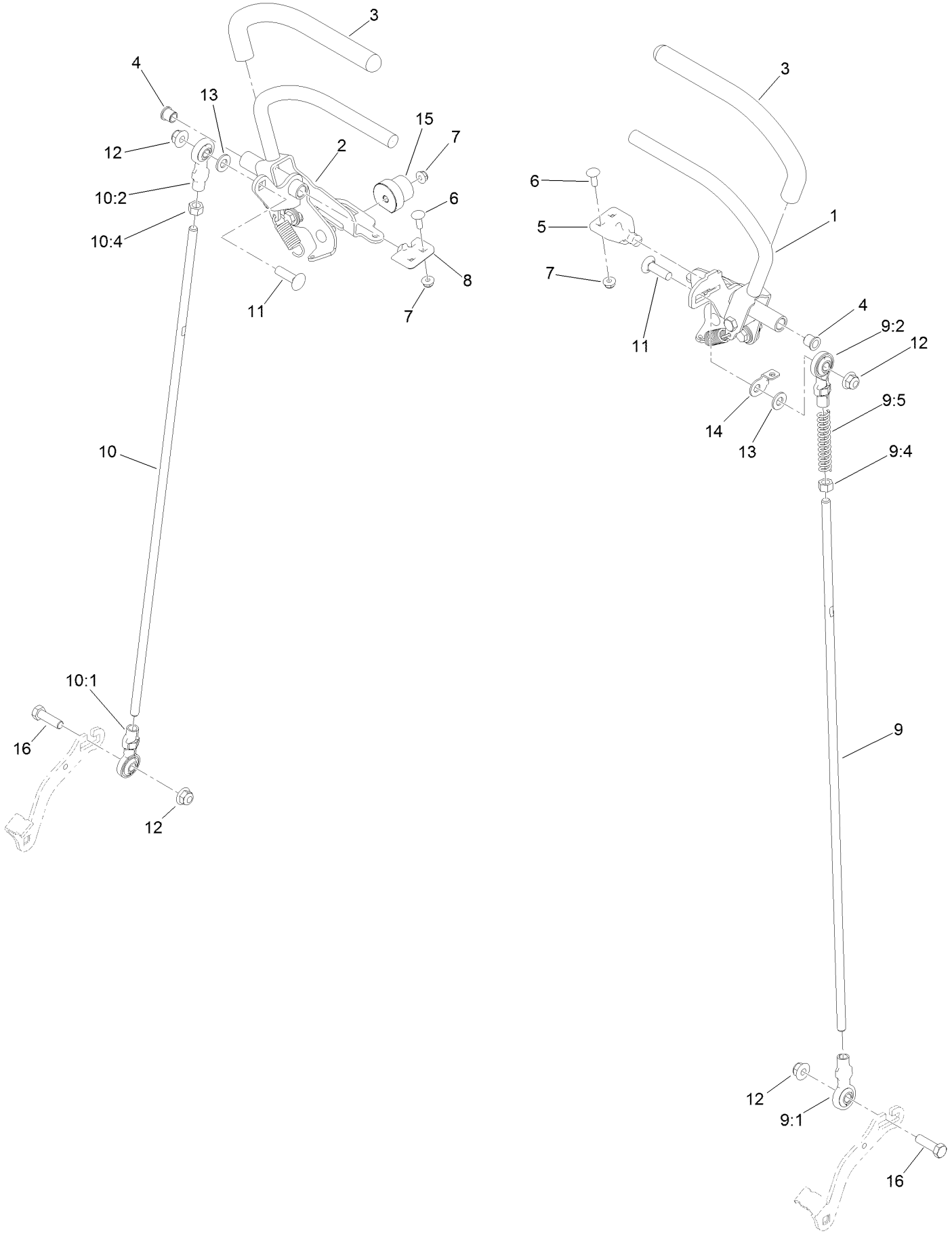

Motion Control Assembly (continued)

Ref.	Part Number	Qty.	Description
1	132-5157	1	LH Control Handle ASM
2	132-5158	1	RH Control Handle ASM
3	119-0222	2	Grip
4	103-9928	2	Bearing
5	120-3288	1	Tab-Pivot, LH
6	3229-1	4	Screw-CARR
7	104-7201	6	Nut-HF, NI
8	120-3287	1	Tab-Pivot, RH
9	138-4619	1	LH Control Rod ASM
9:1	138-4647	1	Ball Joint-LH
9:2	138-4648	1	Ball Joint-RH
9:4	3219-3	1	Nut-Hex
9:5	1-603807	1	Spring-Return, Neutral
10	138-4620	1	RH Control Rod ASM
10:1	138-4647	1	Ball Joint-LH
10:2	138-4648	1	Ball Joint-RH
10:4	3219-3	1	Nut-Hex
11	3231-28	2	Screw-CARR
12	104-8301	4	Nut-HF, NI
13	3256-24	2	Washer-Plain
14	132-7538	1	Bracket-Adjustment, Speed
15	126-1499	2	Cam
16	323-7	2	Screw-HH

Control Handle Assembly No. 132-5157

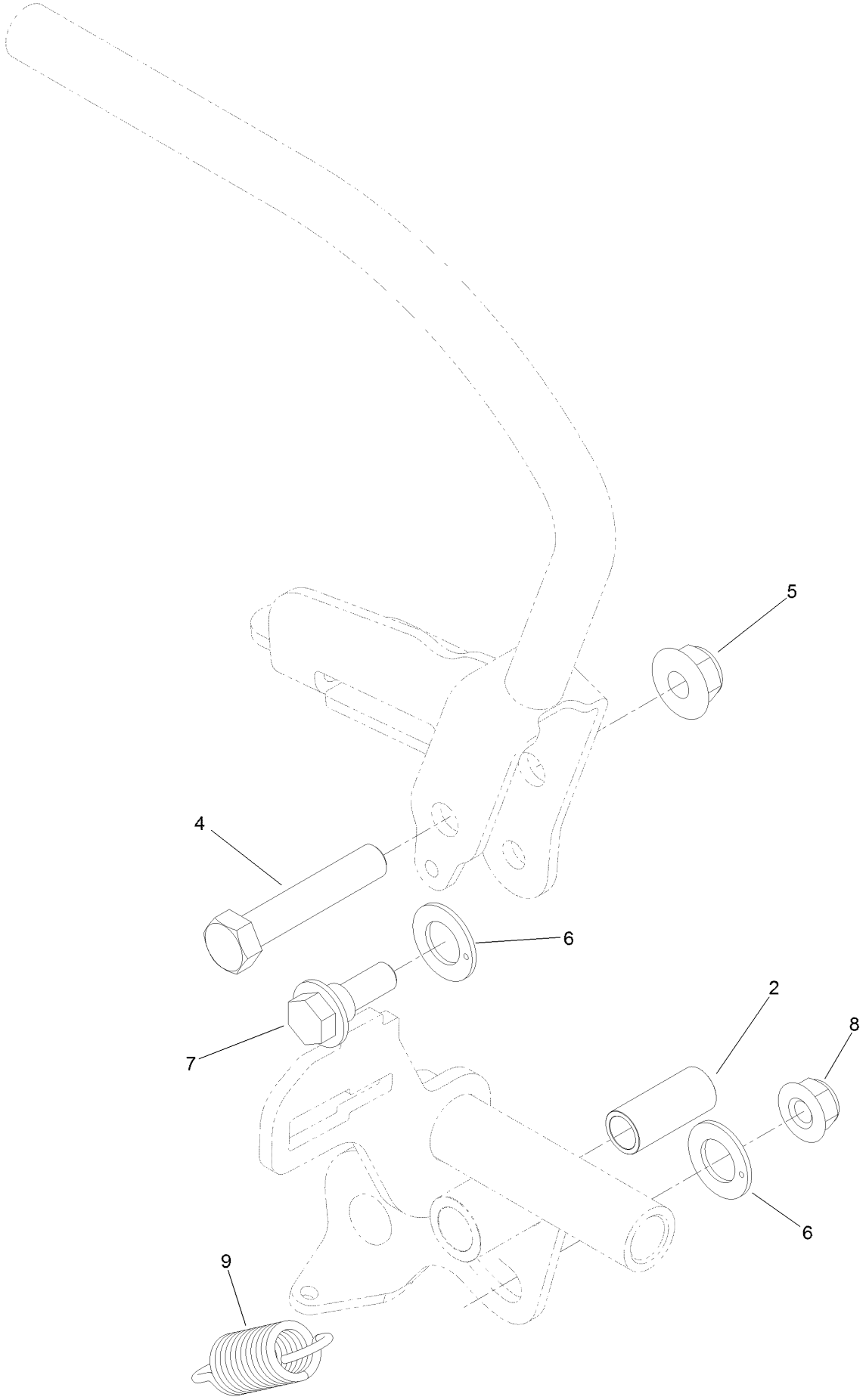

Control Handle Assembly No. 132-5157 (continued)

Ref.	Part Number	Qty.	Description
2	131-3562	1	Bearing-Sleeve
4	323-10	1	Screw-HH
5	104-8301	1	Nut-HF, NI
6	110-7191	2	Washer-Thrust
7	116-2670	1	Screw-Shoulder
8	104-8300	1	Nut-HF, NI
9	132-5146	1	Spring-Extension

Control Handle Assembly No. 132-5158

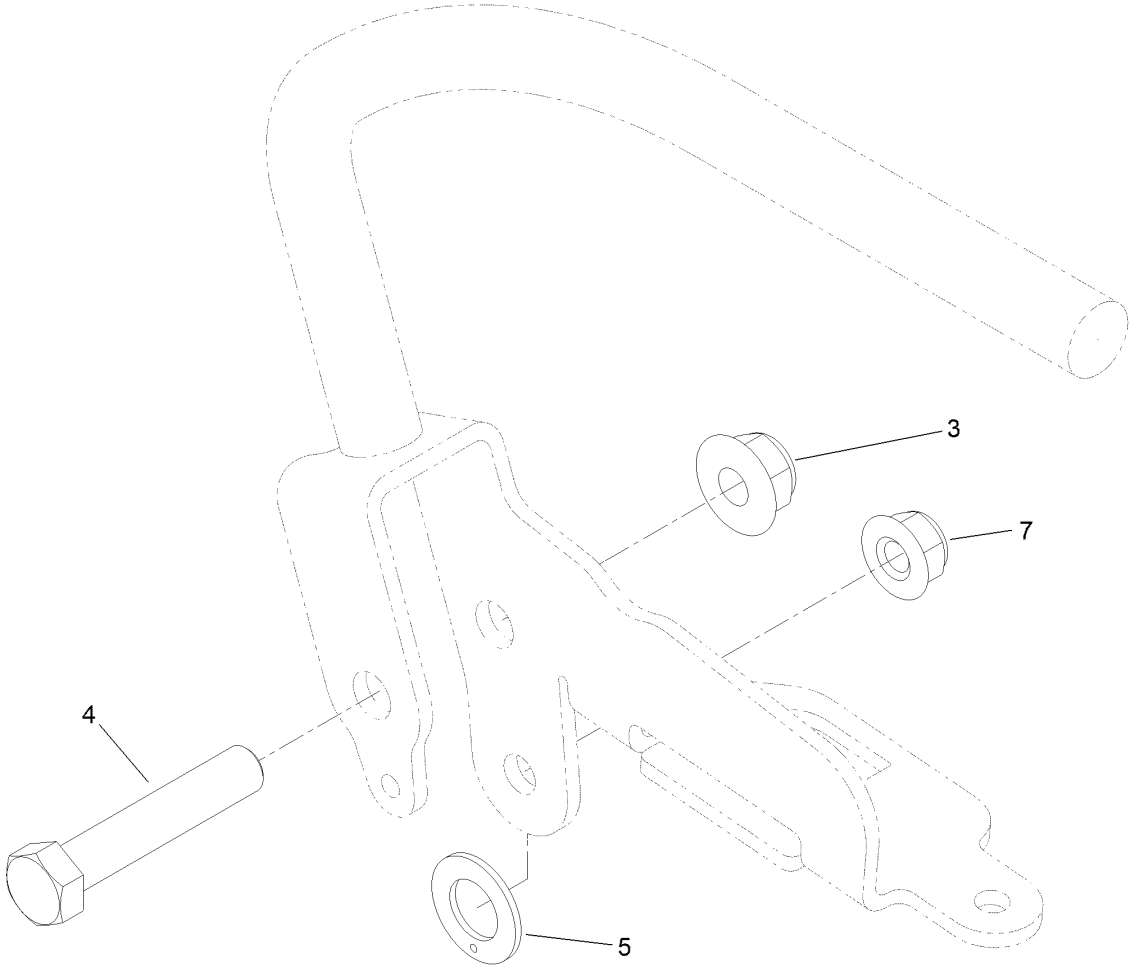

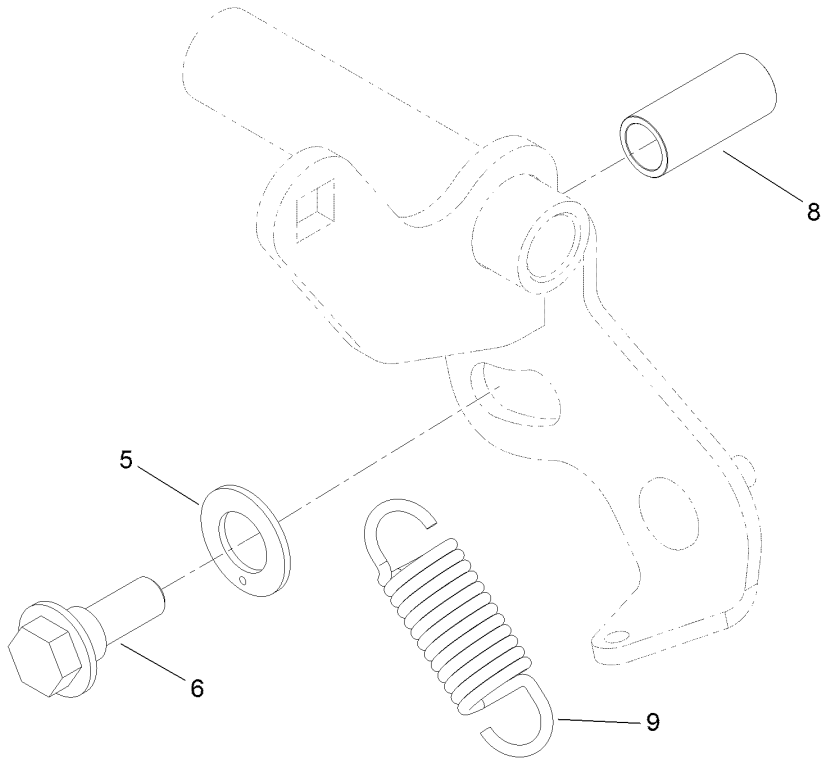

Control Handle Assembly No. 132-5158 (continued)

Ref.	Part Number	Qty.	Description
3	104-8301	1	Nut-HF, NI
4	323-10	1	Screw-HH
5	110-7191	2	Washer-Thrust
6	116-2670	1	Screw-Shoulder
7	104-8300	1	Nut-HF, NI
8	131-3562	1	Bearing-Sleeve
9	132-5146	1	Spring-Extension

Parking Brake Assembly

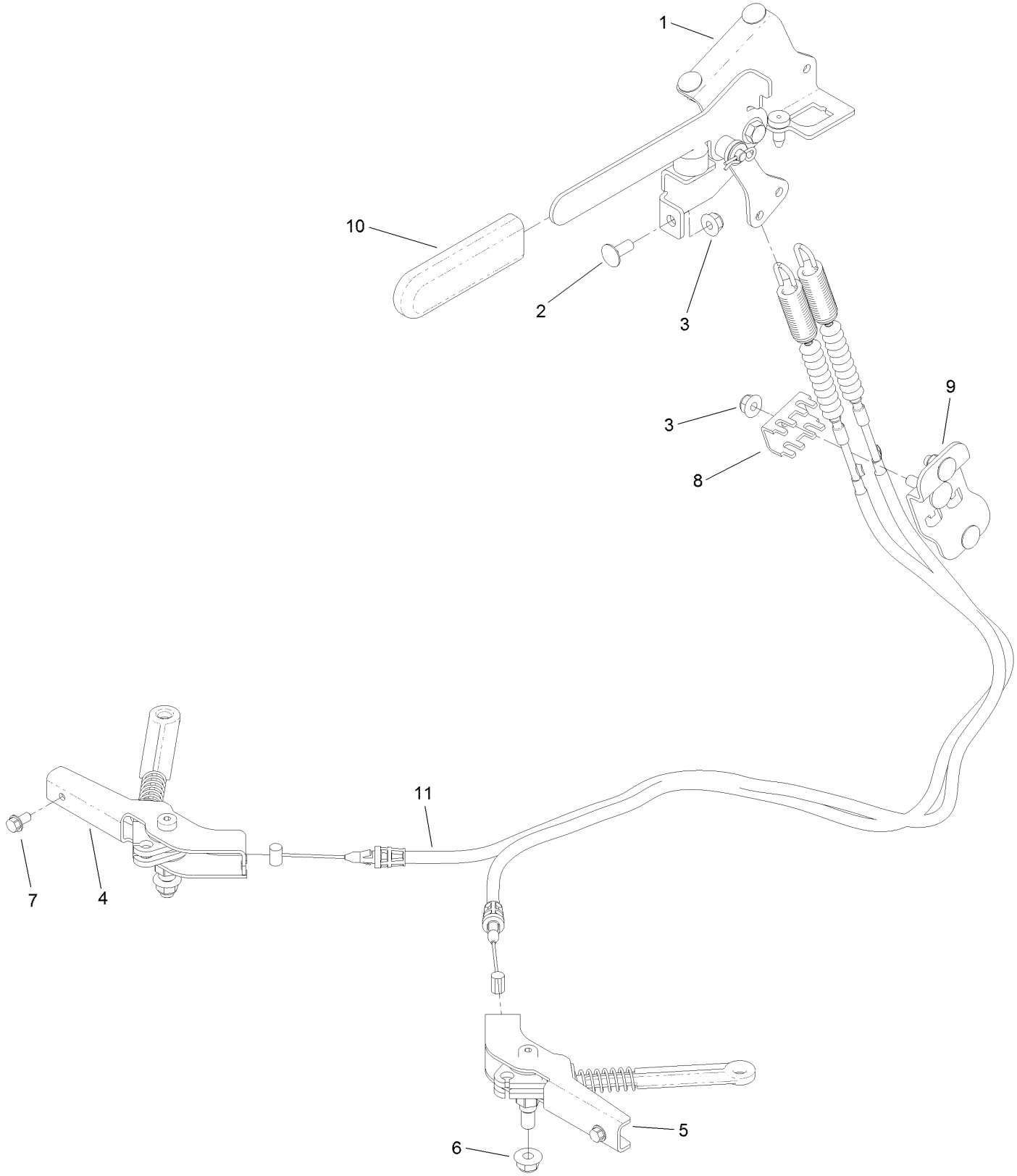

Parking Brake Assembly (continued)

Ref.	Part Number	Qty.	Description
1	132-5170	1	Brake Handle ASM
2	3230-23	5	Bolt-CARR
3	104-8300	6	Nut-HF, NI
4	132-5168	1	RH Brake Caliper ASM
5	132-5169	1	LH Brake Caliper ASM
6	104-8301	2	Nut-HF, NI
7	32144-4	2	Screw-HWH
8	132-1187	1	Clamp-Cable
9	132-7582	1	Mount-Cable, Brake
10	1-633268	1	Grip-Lever
11	131-1195	2	Cable-Brake

Deck Lift Assembly

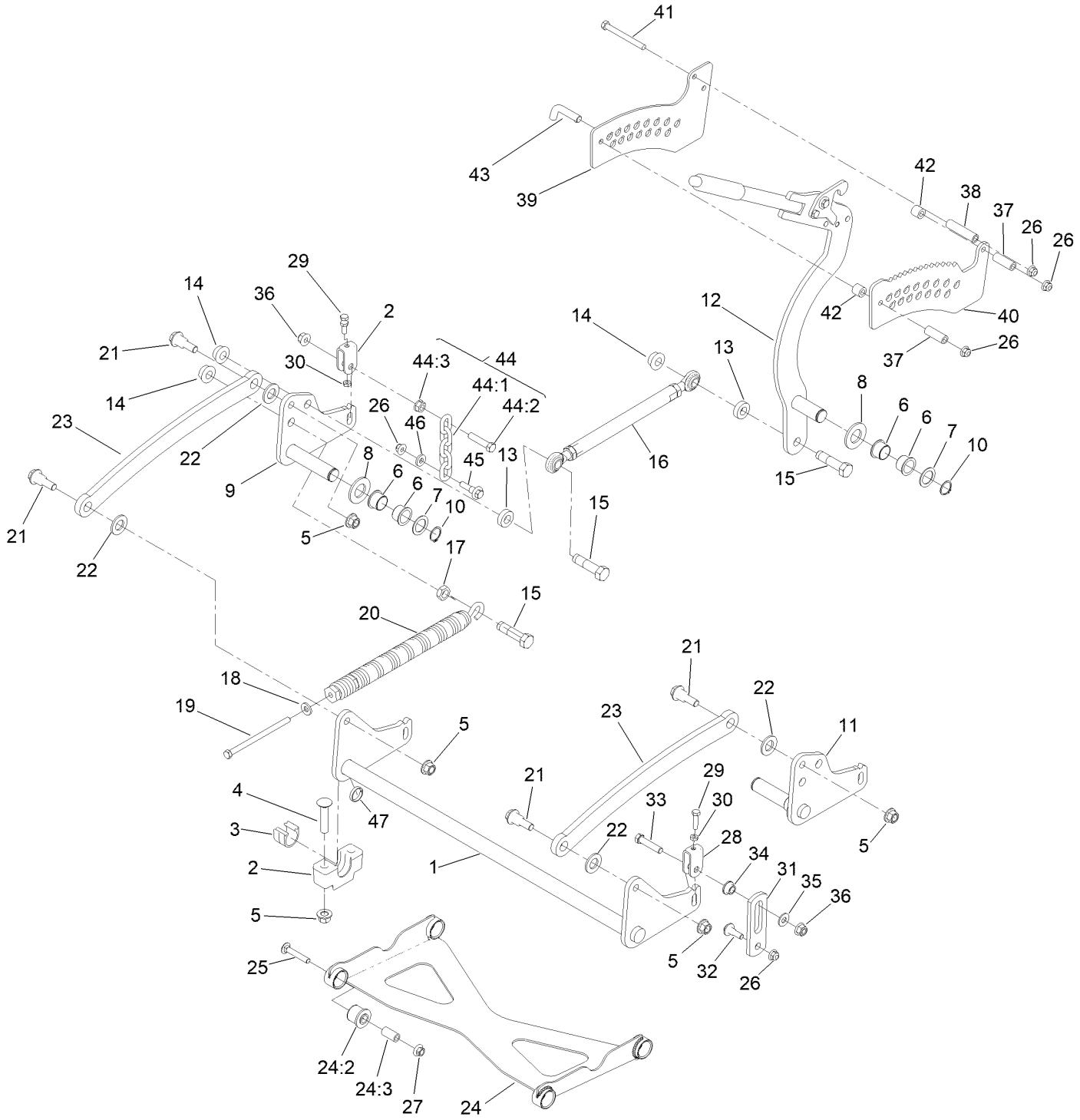

Deck Lift Assembly (continued)

Ref.	Part Number	Qty.	Description
1	120-8405-01	1	Shaft-Cross, Front
2	109-9409	2	Support-Bearing, Cross Shaft (Front)
3	109-9410	2	Bearing-Cross Shaft, Front
4	116-1700	4	Bolt-CARR
5	99-5107	8	Nut-Lock
6	127-0369	6	Bushing
7	10-8110	3	Washer-Thrust
8	3256-62	3	Washer-Flat
9	120-8411-01	1	Arm-Lift, RH
10	32151-29	3	Ring-Retaining
11	120-8410-01	1	Arm-Lift, LH
12	161-6735	1	HOC Lever ASM
13	119-6223	2	Washer
14	138-4932	3	Nut-Hex Flg
15	138-4931	3	Screw-Lock
16	130-6615	1	HOC Link ASM
17	3218-6	1	Nut-Jam
18	98-5975	1	Washer-Belleville
19	323-58	1	Bolt-TAP, HH
20	116-0886	1	Spring-Extension
21	116-0780	4	Screw-Shoulder, HHF
22	3256-28	4	Washer-Flat
23	127-1948-03	2	Link-Lift
24	137-4129	1	Deck Strut ASM
24:2	137-4108	4	Bushing-Rubber
24:3	108-6544	4	Spacer

Ref.	Part Number	Qty.	Description
25	3231-7	4	Screw-CARR
26	104-8301	7	Nut-HF, NI
27	32128-19	4	Nut-HF Lock,Large Flg
28	109-9066	4	Yoke-Adjust, Deck
29	322-47	4	Screw-HH
30	3218-2	8	Nut-Hex Jam
31	130-6589	2	Link-Lift
32	109-9840	2	Screw-Shoulder, HHF
33	109-9065	2	Screw-HH
34	116-2428	2	Bushing-Flanged
35	3256-4	2	Washer-Flat
36	3296-48	4	Nut-Hex
37	95-6448	2	Spacer
38	138-1111	1	Spacer
39	132-7581	1	HOC Plate And Decal ASM
40	138-4887	1	Plate-HOC, Inner
41	116-4701	3	Screw-HHF
42	121-1760	2	Spacer
43	116-5584	1	Pin-HOC
44	116-0756	2	Deck Lift Chain ASM
44:1	1-633447	1	Chain-Lift, Deck
44:2	109-9065	1	Screw-HH
44:3	32128-37	1	Nut-HF
45	130-0742	2	Bolt-Shoulder
46	43-0940	2	Spacer
47	133-1431	1	Spacer-Split

HOC Lever Assembly No. 161-6735

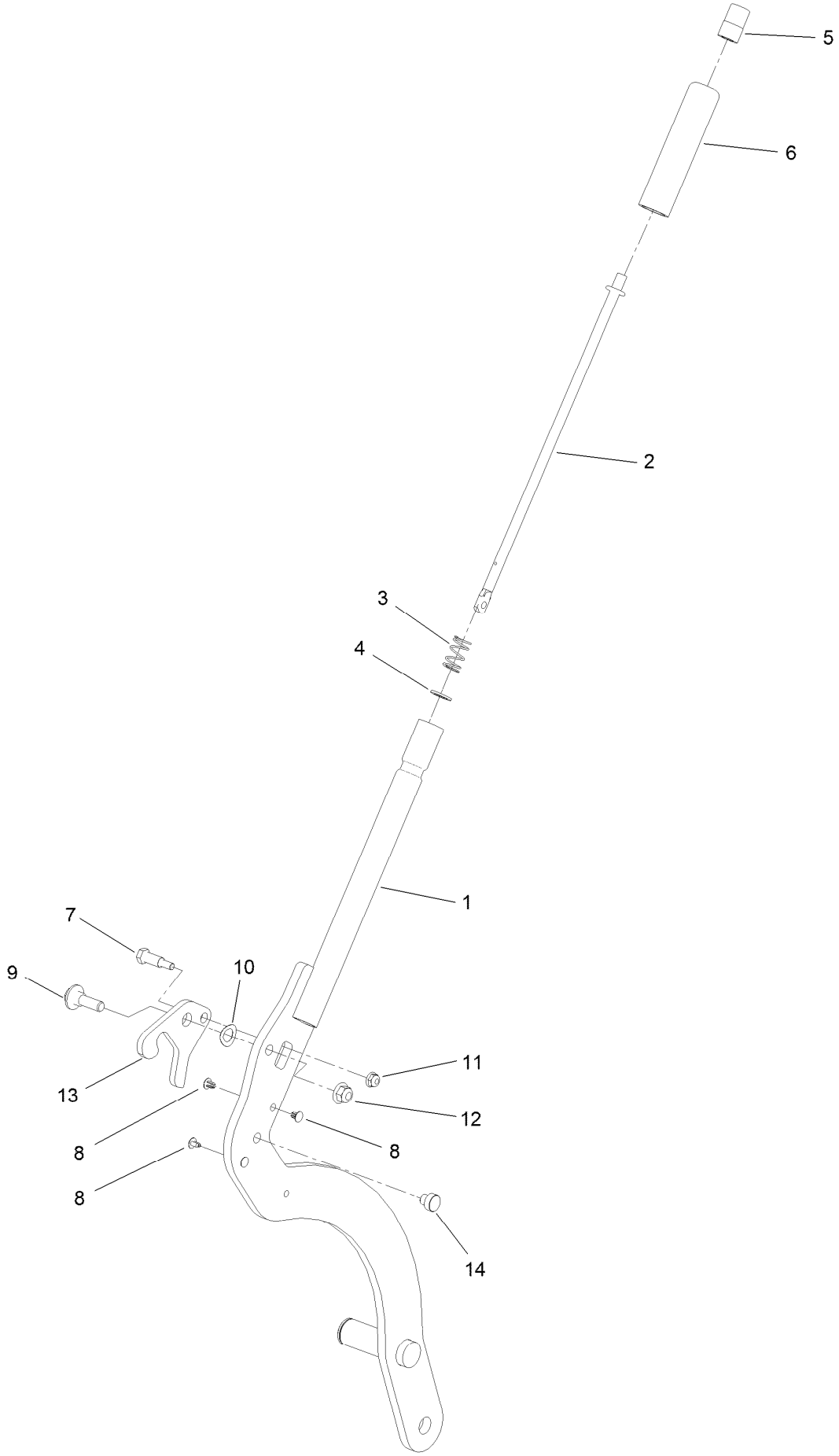

HOC Lever Assembly No. 161-6735 (continued)

Ref.	Part Number	Qty.	Description
1	161-6736-01	1	Lift Lever ASM [red]
2	136-0530	1	Rod-Latch, Release
3	114-8187	1	Spring-Compression
4	114-1207	1	Washer-Special
5	115-2750	1	Knob
6	115-3592	1	Grip
7	119-2309	1	Bolt-Shldr,HH
8	103-1363	4	Rivet
9	614672	1	Screw-Shoulder, HWH
10	110-8982	1	Washer-Spring
11	104-7201	1	Nut-HF, NI
12	104-8301	1	Nut-HF, NI
13	138-4888	1	Latch-HOC
14	138-4863	1	Plug-Wear

HOC Link Assembly No. 130-6615

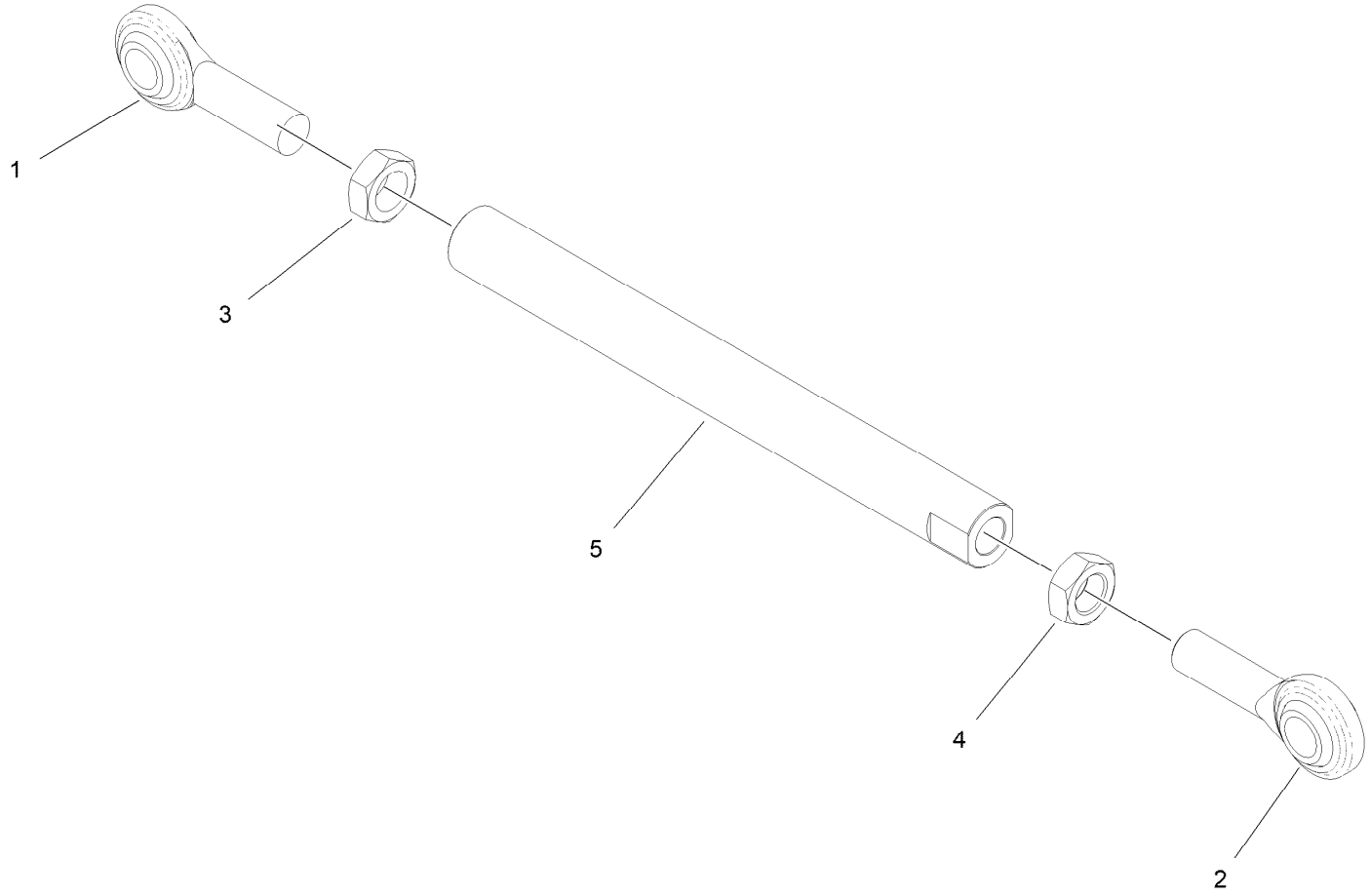

HOC Link Assembly No. 130-6615 (continued)

Ref.	Part Number	Qty.	Description
1	1-633029	1	Balljoint-Spherical
2	117-5291	1	Balljoint-Spherical
3	3220-6	1	Nut-Jam
4	117-5293	1	Nut-Jam
5	130-6614	1	Link-Height Of Cut

Frame Assembly

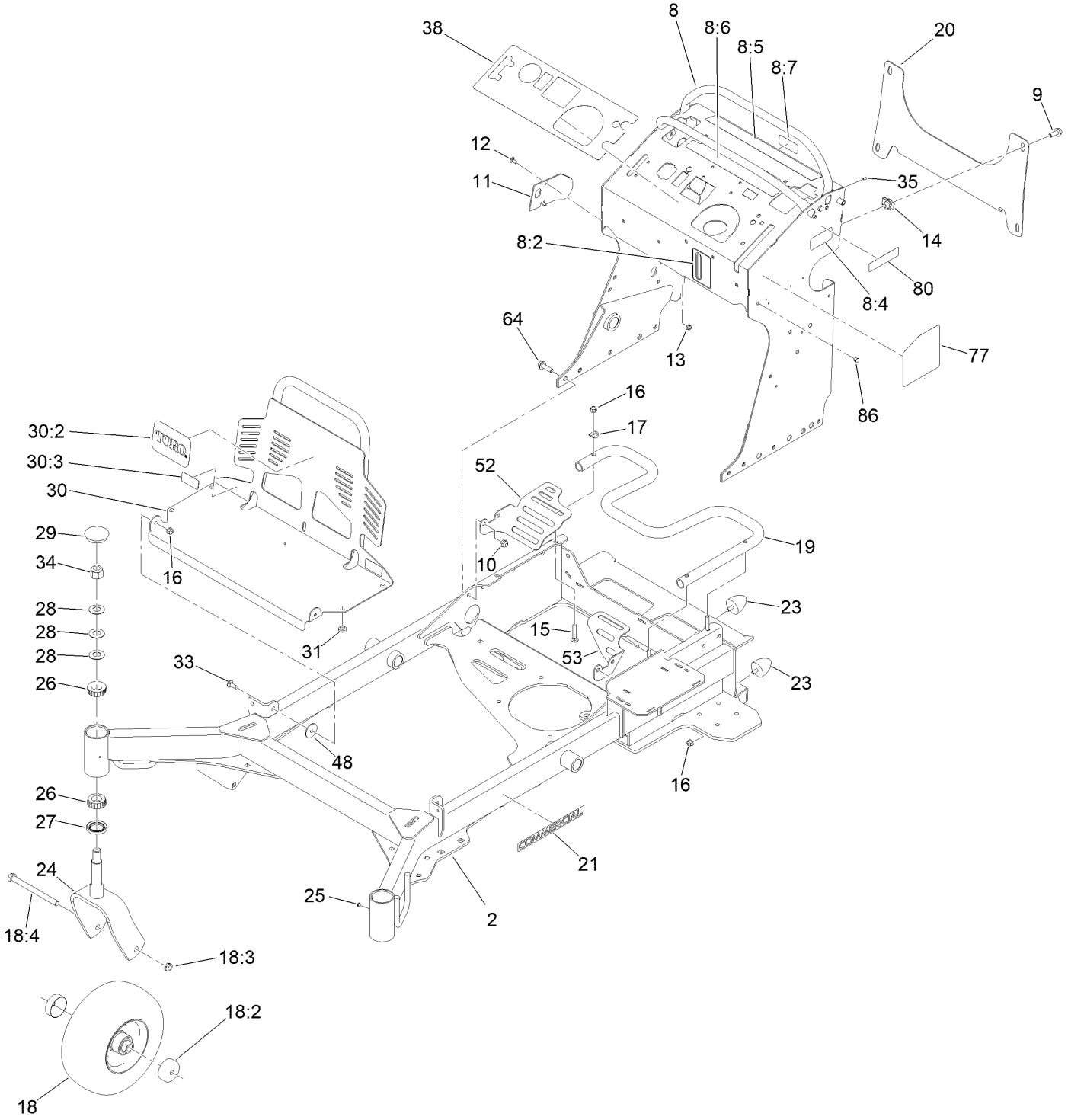

Frame Assembly (continued)

Ref.	Part Number	Qty.	Description
2	131-7423-01	1	Frame
8	140-4283	1	Tower Decal ASM
8:2	147-7921	1	Decal-Oil Level
8:4	116-8775	1	Decal-Fill, Fuel
8:5	139-2878	1	Decal-Warning
8:6	131-3526	1	Decal-Controls
8:7	147-0212	1	Decal - Fuse
9	3234-42	4	Screw-HHF
10	104-8301	8	Nut-HF, NI
11	131-7455	1	Plate-Striker
12	3229-11	1	Screw-CARR
13	104-7201	1	Nut-HF, NI
14	105-4886	4	Nut-Tinnerman
15	3230-5	3	Bolt-CARR
16	104-8300	9	Nut-HF, NI
17	107-3844	3	Washer
18	140-5485	2	Mf Wheel Tire Bearing ASM
18:2	103-2768	2	Guard-Seal
18:3	3296-45	1	Nut-Hex
18:4	325-20	1	Screw-HH
19	132-5161-01	1	Tube-Mount, Fuel Tank
20	132-1145-05	1	Brackt-Cross
21	117-3591	2	Decal-Commercial

Ref.	Part Number	Qty.	Description
23	114-1926	4	Bumper-Rubber
24	147-6343-01	2	Caster Fork ASM [red]
25	1-811010	2	Plug
26	1-543509	4	Bearing-Roller, Tapered
27	116-5647	2	Seal-Grease
28	1-633508	6	Washer-Bellville
29	103-4882	2	Cap-Grease
30	163-4105	1	Engine Guard ASM W/Decals
30:2	94-2579	1	Decal
30:3	133-4641	2	Decal-Warning, No Riders
31	1-513658	4	Bumper
33	3230-10	2	Bolt-CARR
34	3296-51	2	Nut-Lock, NI
35	3290-271	2	Rivet-Pop
38	140-4258	1	Decal-Panel, Control
48	107-3002	2	Washer-Nylon
52	132-7578-01	1	Guard-Fan, RH
53	132-7598-01	1	Guard-Fan, LH
64	119-4061	8	Screw-HHF
77	131-3529	1	Decal-Service Aid
80	133-8062	1	Decal-Spark Arrestor
86	145-3595	3	Dome Panel Plug

Wheel and Bearing Assembly

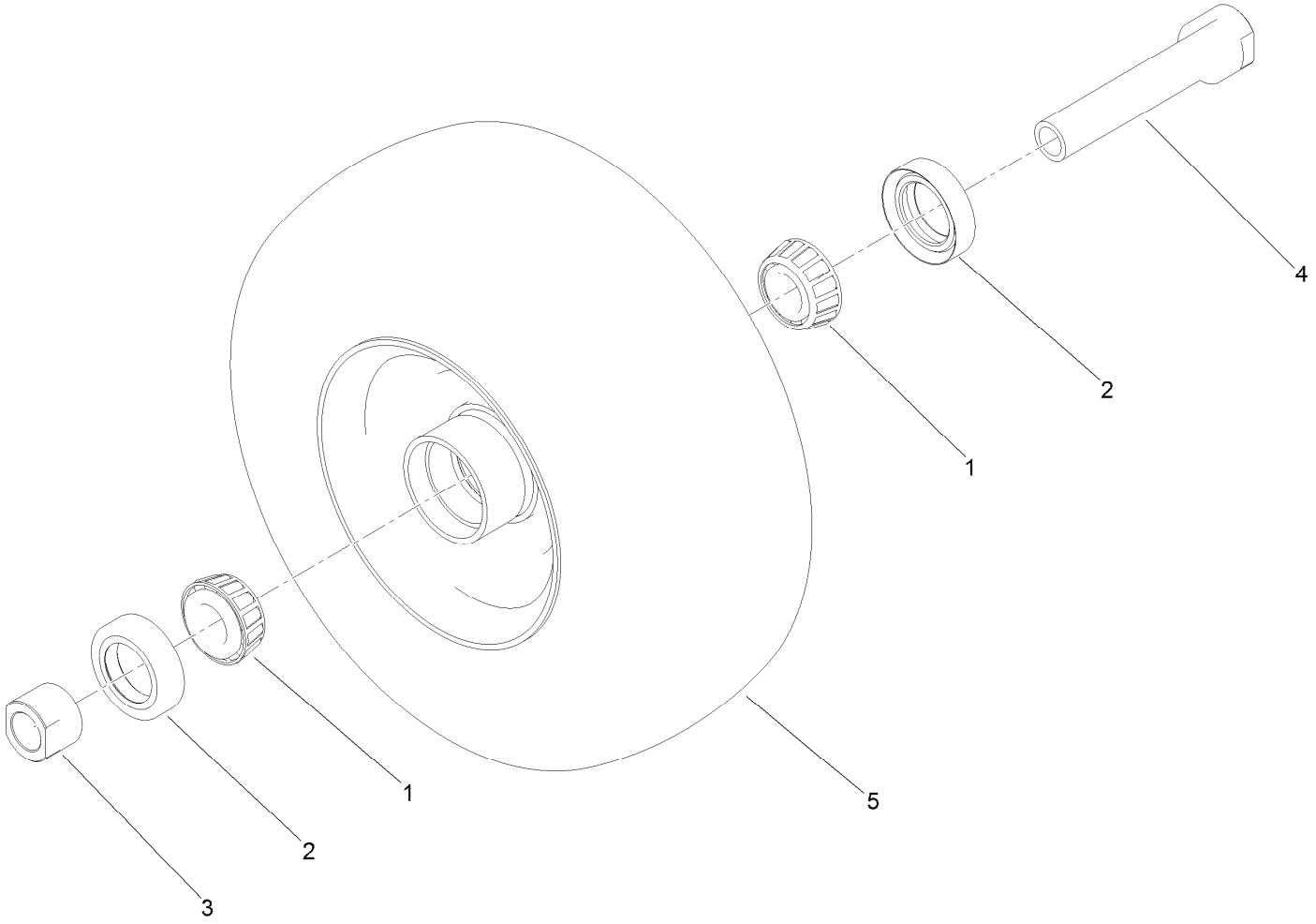

Wheel and Bearing Assembly (continued)

Ref.	Part Number	Qty.	Description
1	1-633585	2	Bearing-Cone, Taper
2	103-0063	2	Seal-Caster
3	103-3051	1	Spacer-Nut
4	126-5359	1	Caster Axle ASM
5	140-5483	1	Mf Wheel And Tire ASM

Platform Assembly

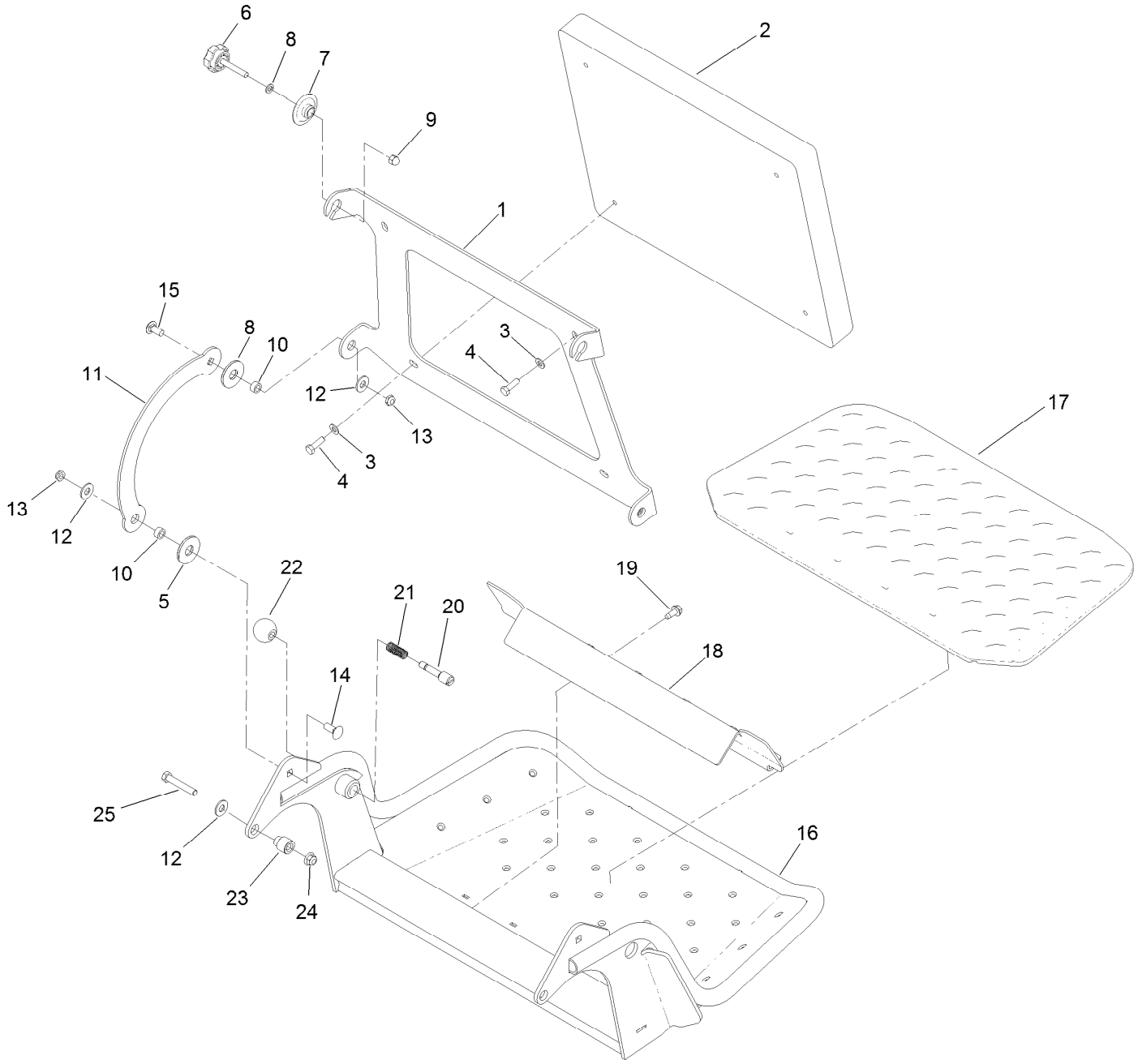

Platform Assembly (continued)

Ref.	Part Number	Qty.	Description
1	120-8499-05	1	Hinge-Pad
2	117-9739	1	Pad-Cushion
3	3256-23	4	Washer-Plain
4	121-7999	4	Screw-HH, Patch
5	114-0463	4	Washer-Friction, Composite
6	133-1426	2	Knob
7	116-2886	2	Slide-Bushing
8	3253-4	2	Washer-Lock
9	137-4808	2	Nut-Acorn
10	111044	4	Spacer
11	114-1915-01	2	Link-Pad
12	3256-4	6	Washer-Flat
13	3296-59	4	Nut-Lock, NI
14	3231-2	2	Bolt-CARR
15	3231-27	2	Screw-CARR
16	163-3498-01SP	1	Platform ASM
17	126-7157	1	Mat-Platform
18	3345-771	1	Shield Clamp Kit
19	32144-70	2	Screw-HWHTF
20	119-8650	1	Pin-Latch
21	114-5348	1	Spring
22	1-603175	1	Knob-Ball
23	132-7583	2	Bushing-Flanged
24	104-8301	2	Nut-HF, NI
25	323-45	2	Screw-HH

Engine Assembly

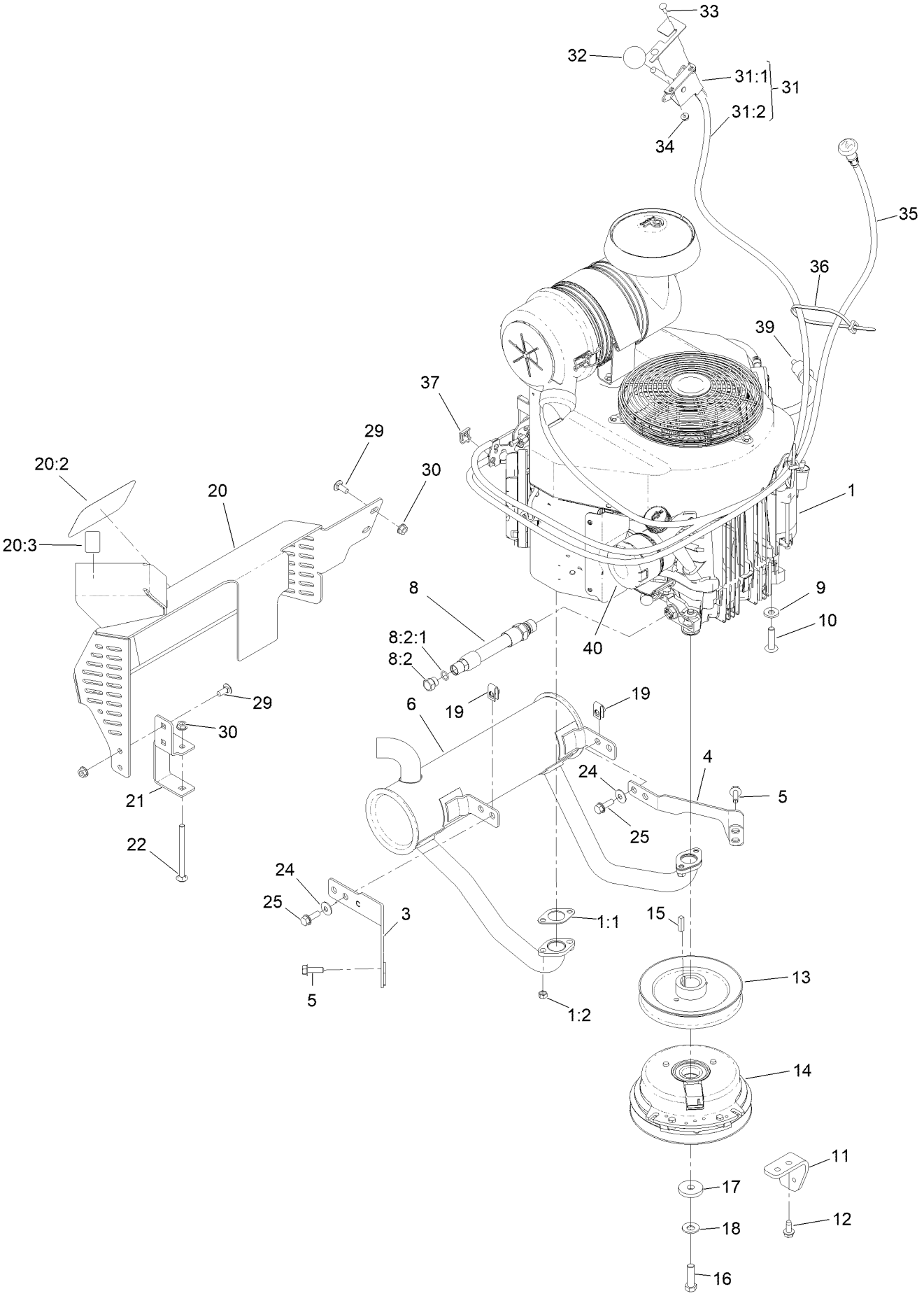

Engine Assembly (continued)

Ref.	Part Number	Qty.	Description
1		1	Engine Kawasaki, Fx691V ■ ▲
1:1	1-653313	2	Gasket-Exhaust
1:2	114-3549	4	Nut
1:5	119-5945	1	Element-Filter, Air (Inner) ●
1:6	119-5944	1	Element-Filter, Air (Outer) ●
1:7	95-9853	1	Bolt (5X18) ●
3	132-1173	1	Bracket-Muffler, Front
4	132-1174	1	Bracket-Muffler, Rear
5	33104-025	4	Screw-HHF
6	133-4633	1	Muffler
8	133-4659	1	Hose ASM
8:2	353-508	1	Plug-HH
8:2:1	237-42	1	O-Ring
9	98-5975	4	Washer-Belleville
10	126-0983	4	Screw-BHTF
11	131-3586-05	1	Stop-Clutch
12	32144-70	2	Screw-HWHTF
13	120-8498	1	Pulley
14	131-1100	1	Clutch
15	1-807259	1	Key
16	3212-6	1	Screw-HH
17	1-543610	1	Washer-Flat
18	1-603610	1	Washer-Spring
19	94-2413	4	Nut-U
20	163-4101	1	Muffler Guard ASM
20:2	94-2579	1	Decal
20:3	127-0392	1	Decal-Hot Surface
21	131-3530-05	1	Bracket-Mounting, Guard
22	106-9758	1	Screw-CARR
24	3290-456	4	Washer-Belleville
25	3234-29	4	Screw-HHF
29	3230-23	4	Bolt-CARR
30	32128-25	5	Nut-HF
31	147-1664	1	Throttle ASM
31:1	145-6187	1	Lever-Control
31:2	147-1674	1	Cable-Throttle
32	1-603175	1	Knob-Ball
33	1-807533	2	Bolt-CARR
34	32128-17	2	Nut-Lock, Flange
35	132-5140	1	Cable-Choke
36	3290-378	1	Tie-Cable
37	81-1690	1	Clamp-Cable
39	121-4570	1	Filter-Fuel ●
40	119-5852	1	Filter-Oil ●

● Not illustrated
▲ Obtain parts from www.kawpower.com
■ Not serviced separately

Fuel Tank Assembly

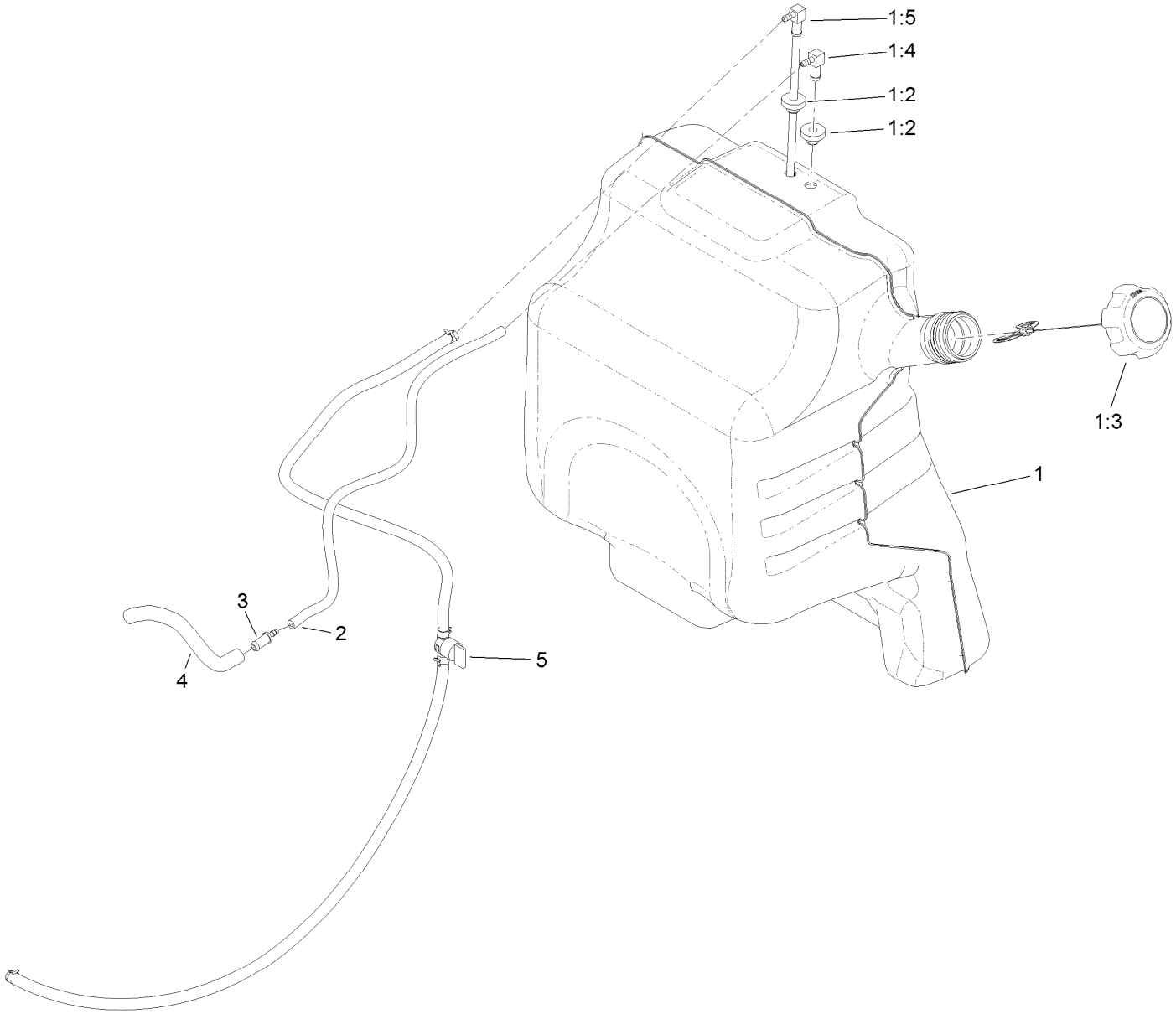

Fuel Tank Assembly (continued)

Ref.	Part Number	Qty.	Description
1	132-7560	1	Fuel Tank ASM
1:2	46-6560	2	Bushing
1:3	137-4127	1	Cap-Fuel
1:4	104-5228	1	Fitting-Elbow, 90 DEG
1:5	145-6195	1	ASM, Tube-Fuel

Ref.	Part Number	Qty.	Description
2	110-8255	1	Hose-Fuel
3	98-2952	1	Fitting-Straight
4	132-7576	1	Hose-Fuel
5	132-7546	1	Fuel Line ASM

Electrical Assembly

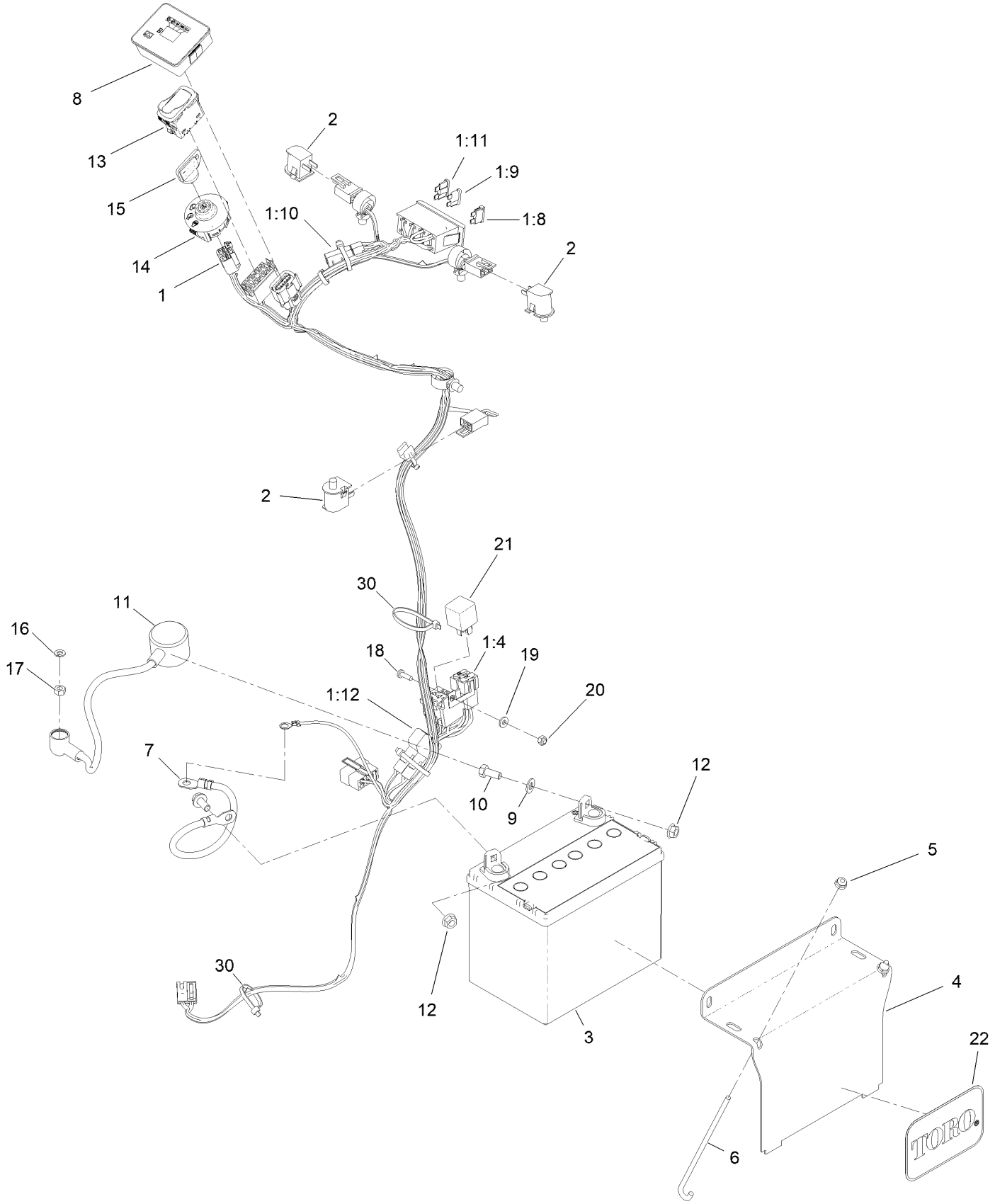

Electrical Assembly (continued)

Ref.	Part Number	Qty.	Description
1	145-5228	1	Harness-Wire, Grandstand
1:4	109101	1	Fuse-Blade, 20 Amp
1:8	109355	2	Fuse-Blade, 15 Amp
1:9	218-578	1	Fuse-Blade, 10 Amp
1:10	116-0053	2	Cap-Plug
1:11	110928	1	Fuse-Blade, 5 Amp
1:12	109103	1	Fuse-Blade, 30 Amp
2	82-2190	3	Switch-Bail
3	104-8162	1	Battery
4	130-6635-01	1	Bracket-Hold Down, Battery
5	104-7201	2	Nut-HF, NI
6	1-633651	2	Bolt-Holddown
7	112-7063	1	Cable-Battery, Black
8	140-1884	1	Module-Meter, Hour
9	3256-23	2	Washer-Plain

Ref.	Part Number	Qty.	Description
10	322-3	2	Screw-HH
11	115-3864	1	Cable-Battery, Positive
12	109-5715	2	Nut-HHF, Smooth
13	139-6367	1	Switch-Rocker, (On)-On-Off
14	137-4101	1	Switch-Ignition
15	63-8360	1	Key-Ignition
16	3253-3	1	Washer-Lock
17	3217-5	1	Nut-Hex
18	3290-500	1	Screw-PPH
19	3256-14	1	Washer-Flat
20	3296-2	1	Nut-Lock, NI
21	1-643275	1	Relay
22	67-1300	1	Decal
30	3290-378	2	Tie-Cable

Attachments and Accessories

For 72505 GrandStand Mower With 52in TURBO FORCE Cutting Unit

Product Name	Model/Part
Hypr-Oil 500 (quart)	114-4713
Hypr-Oil 500 (gallon)	114-4714
Hypr-Oil 500-5 (5 gallon)	114-4715
Oil Filter	119-5852
Element-Filter, Air (Outer)	119-5944
Element-Filter, Air (Inner)	119-5945
Fuel Filter	120-2235
Harness Wire Splitter	121-5988
Toro Premium Fuel Treatment 12oz Bottle	131-6572
Speed Setting Tool	132-7595
Stand-On Weight Kit	133-1428
Chute Gate Kit W/ Bag	133-1434
Trash Bag Assembly	133-1435
Roller Striper Kit	133-1436
Light Kit	133-1437
Electric Accessory Port	133-1438
HOC Set Blocks	133-1439
Anti-Scalp Kit, 48/52 Grandstand Deck	133-1440
Trimmer Rack	133-1441
Hydro Oil Change Kit	133-1457
Strobe Light Kit	133-1495
5 Gallon Bucket	133-2533
Hydraulic Cap Lock Kit	136-5420
Bucket Mount Kit	136-5681
Bagger Enhancement Kit	139-1529
Recycler Kit	139-6653
18x8.5n10 X-Tweel Turf	139-7890
Blade-18.00 High Flow	140-1242
Pneumatic Castor Wheel Kit	140-4311
Blade-18.00 Medium Flow	140-4856
Blade-18.00 Low Flow	140-4857
Blade-18.00 Atomic	140-4858
Blade-18.00 Recycler	140-4859
6 Pack-Blade, 18.00 High Flow	140-4882
6 Pack-Blade, 18.00 Med Flow	140-4883
6 Pack-Blade, 18.00 Low Flow	140-4884
6 Pack-Blade, 18.00 Atomic	140-4885
6 Pack-Blade, 18.00 Recycler	140-4886
2 Transmission Filter Kit	144-3842
Blade-18.00 High Flow	147-6251
6 Pack-blade, 18.00 High Flow	147-6255
Kit-pneumatic Caster Tire	161-3470
Kit-semi Pneu Caster Tire	161-3471
Soft Bag (3 Bushel)	30104
10W30 4-Cycle Engine Oil (32oz Bottle)	38280
Toro 4-Cycle SAE 30 Oil (32oz Bottle)	38903

Attachments and Accessories (continued)

Twin Bagger Kit..... 78524
Blower Drive 52in..... 78526
Spark Plug 92-2153
Spark Arrestor 98-9099

TORO®

Count on it.