Form No. 3397-841 Rev C

TORO®

Count on it.

Parts Catalog

Extended Flexible Grass Basket Kit

Reelmaster® 3550 Series 18-inch Cutting Unit

Model No. 03924

Register at www.Toro.com.
Original Instructions (EN)

CE

3397-841 C

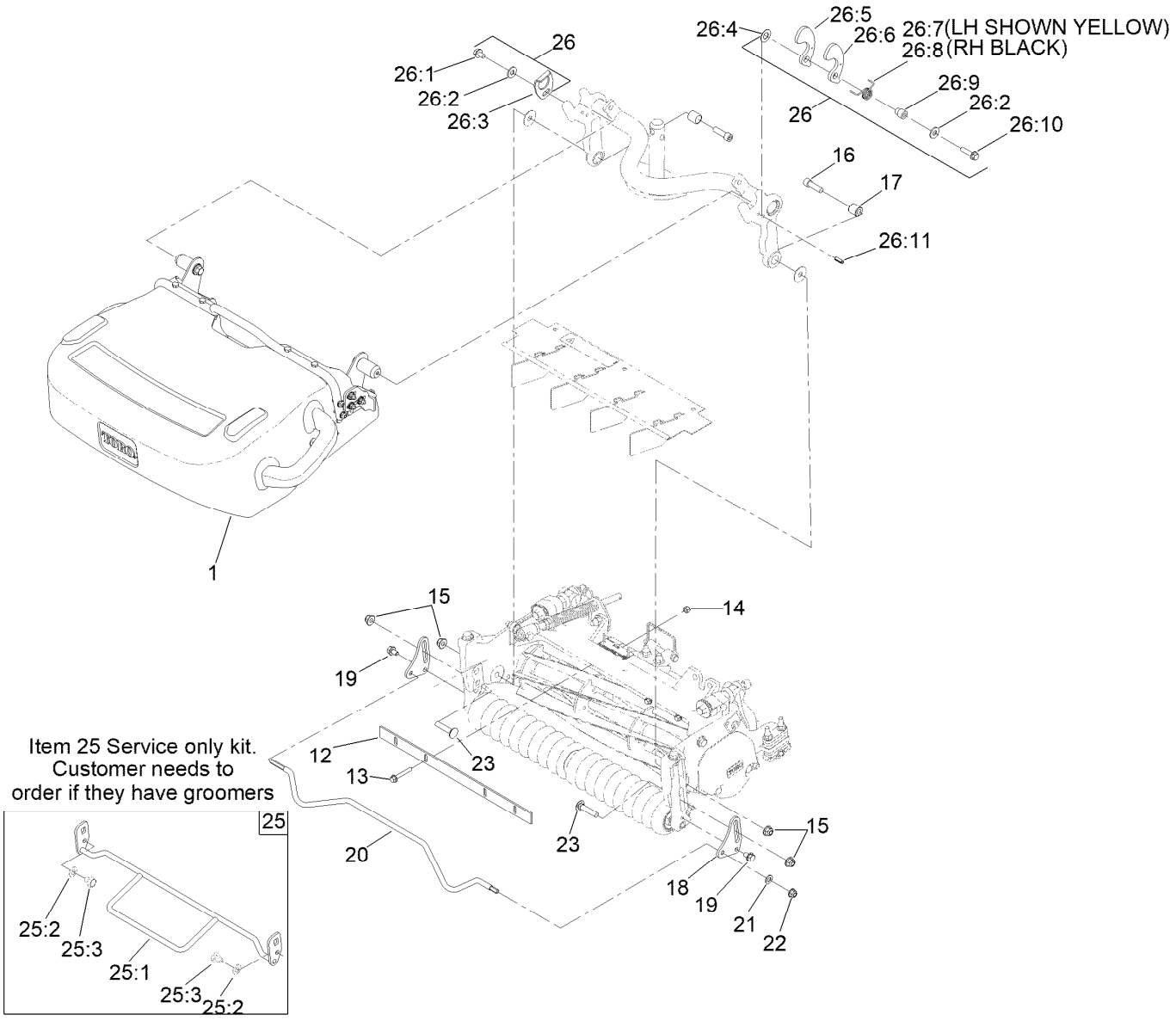

Extended Flexible Grass Basket Assembly

Ref.	Part Number	Qty.	Description
1	131-6820	1	18In Extended Flexible Grass Basket ASM
12	112-1742-03	1	Bar-Cutoff (18-Inch)
13	32105-18	4	Screw-HHF
14	3296-42	4	Nut-Lock, NI
15	104-8301	4	Nut-HF, NI
16	3274-1	2	Screw-HSH
17	125-2776	2	Spacer-Frame, Basket
18	125-2794	2	Plate-Basket
18	137-0824	2	Plate-Basket (2 Position) ●
19	100-1719	2	Screw-Flange
20	131-6827	1	Rod-Basket 18In
21	94-6936	1	Washer-Hardened
22	104-8300	1	Nut-HF, NI
23	3231-5	2	Screw-CARR
25	131-6823	1	Groomer Rod Kit (18In)

Ref.	Part Number	Qty.	Description
25:1	131-6824-03	1	Rod-Groomer (I8In)
25:2	33095-00	2	Washer-Flat
25:3	60-9920	2	Screw
26	147-1000	1	Kit - Rm Grass Basket Hardware
26:1	3234-30	1	Screw-HHF
26:2	3256-71	2	Washer-Flat
26:3	75-3920	1	Guide-Basket
26:4	110-4068	1	Washer-Plastic
26:5	127-0264-01	1	Bracket-Basket HD Lock ●
26:6	75-3950-03	1	Bracket-Basket Lock
26:7	75-3960	1	Spring-Torsion, LH (Yellow)
26:8	75-3970	1	Spring-Torsion, RH
26:9	108-9087	1	Collar-Basket
26:10	3234-36	1	Screw-HHF
26:11	32121-11	1	Pin-Roll

● Optional Equipment

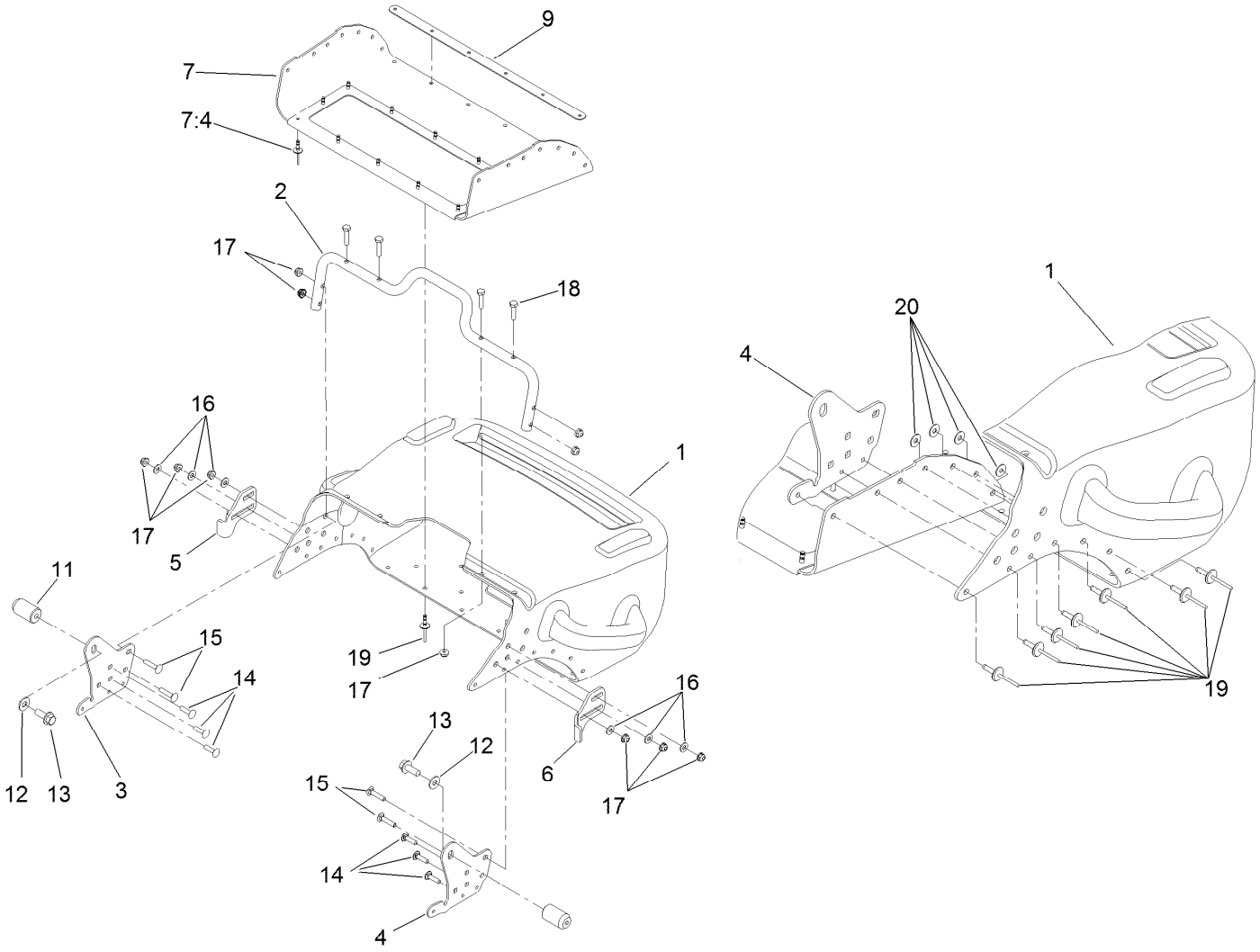

Grass Basket Assembly No. 131-6820

Ref.	Part Number	Qty.	Description
1		1	Basket-Grass 18In Flex EXT (Mach) ●
2	131-3216-03	1	Handle-Basket, 18In
3	130-8095-03	1	Bracket-Inner Basket, LH
4	130-8096-03	1	Bracket-Inner Basket, RH
5	132-7128-03	1	Bracket-Stop, LH
6	132-7129-03	1	Bracket-Stop, RH
7	131-4738	1	Basket Flap ASM (18In)
7:4	131-3208	12	Rivet-Pop
9	125-5617-03	1	Strip-18In Basket
11	110-9626	2	Pin-Basket
12	3256-3	2	Washer-Flat
13	3234-42	2	Screw-HHF
14	3229-30	6	Screw-CARR
15	3229-3	4	Screw-CARR
16	3256-22	6	Washer-Flat
17	104-7201	14	Nut-HF, NI
18	321-7	4	Screw-HH
19	131-3208	20	Rivet-Pop
20	3256-49	8	Washer-Plain

● Not serviced separately



Count on it.