Operator’s Manual

Reelmaster® 3100-D Traction Unit

Model—Serial Range

03170—415300000 and Up
03171—415400000 and Up

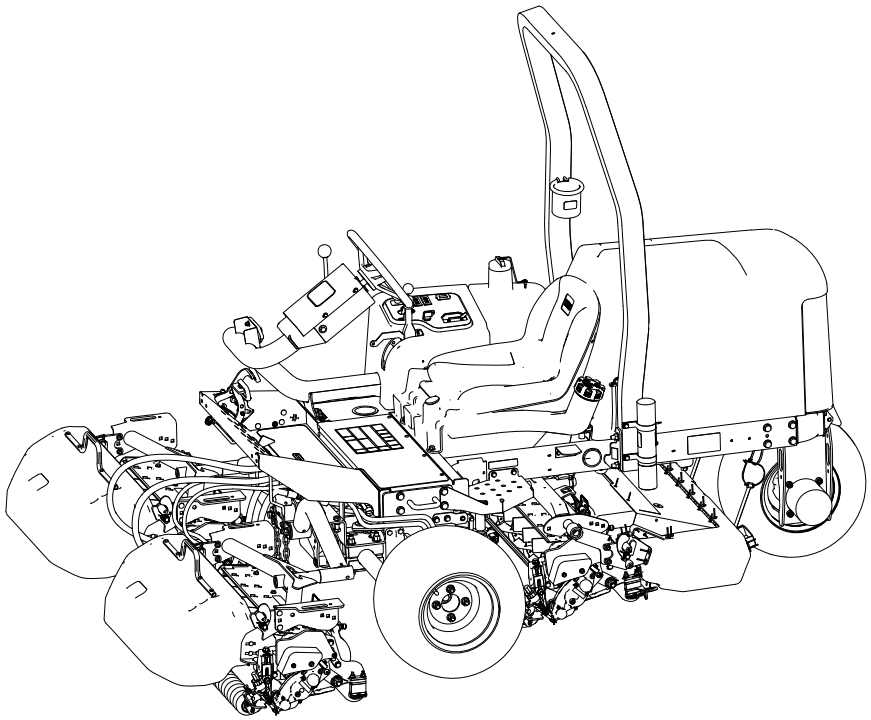

3466-297D

Original Instructions (EN)

3466-297 D

Disclaimers and Regulatory Information

This product complies with all relevant European directives; for details, please see the separate product specific Declaration of Conformity (DOC) sheet.

It is a violation of California Public Resource Code Section 4442 or 4443 to use or operate the engine on any forest-covered, brush-covered, or grass-covered land unless the engine is equipped with a spark arrester, as defined in Section 4442, maintained in effective working order, or the engine is constructed, equipped, and maintained for the prevention of fire.

The enclosed engine owner's manual is supplied for information regarding the US Environmental Protection Agency (EPA) and the California Emission Control Regulation of emission systems, maintenance, and warranty. Replacements may be ordered through the engine manufacturer.

⚠ WARNING

CALIFORNIA
Proposition 65

Diesel engine exhaust and some of its constituents are known to the State of California to cause cancer, birth defects, and other reproductive harm.

Battery posts, terminals, and related accessories contain lead and lead compounds, chemicals known to the State of California to cause cancer and reproductive harm. Wash hands after handling.

Use of this product may cause exposure to chemicals known to the State of California to cause cancer, birth defects, or other reproductive harm.

Table of Contents

Disclaimers and Regulatory Information 2
Chapter 1: Introduction 1–1
- Intended Use 1–1
- Getting Help 1–1
- Manual Conventions 1–2
  - Safety Alert Classifications 1–2

Chapter 2: Safety 2–1
- General Safety 2–1
- Before Operation Safety 2–1
  - Fuel Safety 2–2
- During Operation Safety 2–2
  - Rollover Protection System (ROPS) Safety 2–3
  - Slope Safety 2–3
- After Operation Safety 2–4
- Maintenance Safety 2–5
  - Engine Safety 2–5
  - Electrical System Safety 2–5

© 2024—The Toro® Company

8111 Lyndale Ave So
Bloomington, MN 55044

Contact us at www.Toro.com
Printed in the USA

All rights reserved

Cooling System Safety 2–5
Hydraulic System Safety 2–6
Blade Safety 2–6
Storage Safety 2–6
Safety and Instructional Decals 2–7
Chapter 3: Setup 3–1
1 Installing the Wheels 3–1
2 Installing the Steering Wheel 3–2
3 Charging and Connecting the Battery 3–3
4 Checking the Slope Indicator 3–4
5 Installing the Roll Bar 3–5
6 Installing the Front Lift Arms 3–6
Preparing to Install the Lift Arms 3–6
Assembling the Lift Arms to the Machine 3–6
Assembling the Lift Cylinder to the Left Lift Arm 3–7
Assembling the Lift Cylinder to the Right Lift Arm 3–7
7 Installing the Carrier Frames to the Cutting Units 3–8
Preparing the Cutting Units 3–8
Assembling the Carrier Frames for the Front Cutting Units 3–8
Assembling the Cutting Unit and Rear Carrier Frame 3–9
Assembling the Carrier Frames for the Front Cutting Units 3–9
Assembling the Cutting Unit and Rear Carrier Frame 3–10
8 Installing the Cutting Units 3–11
9 Installing the Cutting Unit Drive Motors 3–12
10 Adjusting the Lift Arms 3–12
Checking Lift Arm and Rear Cutting Unit Clearance 3–12
Adjusting the Lift-Arm Clearance 3–13
Adjusting the Lift-Arm Stop Bolts 3–14
Adjusting the Rear Cutting Unit Clearance 3–14
11 Preparing the Machine 3–15
12 Installing the Hood Latch 3–16
13 Installing the Exhaust Guard 3–17
14 Installing the CE Decals 3–17
Applying the Year of Production Decal and CE Decal 3–18
Applying the CE Tilt Danger Decal 3–18
15 Installing the Tipper Roller Kit (Optional) 3–18
Chapter 4: Product Overview 4–1
Controls 4–1
Key Switch 4–2
Traction Pedals 4–2
Mow/Transport Slide 4–2
Cutting Unit Shift Lever 4–3
Slope Indicator 4–3
Indicator Slot 4–4
Cutting-Unit Drive Switch 4–4
Throttle 4–4
Lift Lever Lock 4–4
Parking Brake 4–4
Oil Pressure Warning Light 4–5
Engine Coolant Temperature Warning Light 4–5
Alternator Light 4–5
Glow-Plug Indicator Light 4–5
Hour Meter 4–5
Mower Manifold 4–5

Fuel Gauge 4–6
Tilt-Steering Lever 4–7
Seat Adjustment Lever 4–7
Specifications 4–8
Attachments/Accessories 4–8
Chapter 5: Operation 5–1
Before Operation 5–1
Performing Daily Maintenance 5–1
Fuel 5–1
Checking the Interlock Switches 5–3
During Operation 5–4
Starting the Engine 5–4
Shutting Off the Engine 5–5
Cutting Grass with the Machine 5–5
Side-Shifting the Cutting Units 5–6
Driving the Machine in Transport Mode 5–7
Clip Rate (Reel Speed) 5–8
Adjusting the Reel Speed 5–9
Bleeding the Fuel System 5–9
Operating Tips 5–10
After Operation 5–11
After Mowing 5–11
Towing the Machine 5–11
Tie-Down Point Locations 5–12
Hauling the Machine 5–12
Chapter 6: Maintenance 6–1
Recommended Maintenance Schedule 6–1
Daily Maintenance Checklist 6–4
Pre-Maintenance Procedures 6–5
Preparing for Maintenance 6–5
Lifting the Front of the Machine 6–5
Lifting the Back of the Machine (Using a Hoist) 6–5
Lifting the Back of the Machine (Using a Jack) 6–6
Removing the Battery Cover 6–6
Opening the Hood 6–6
Lubrication 6–7
Greasing the Bearings and Bushings 6–7
Grease Fitting Locations 6–8
Checking the Sealed Bearings 6–12
Engine Maintenance 6–12
Engine Oil Specifications 6–12
Checking the Engine-Oil Level 6–13
Changing the Engine Oil and Filter 6–13
Servicing the Air Cleaner 6–15
Fuel System Maintenance 6–16
Fuel Storage 6–17
Servicing the Fuel Tank 6–17
Inspecting the Fuel Lines and Connections 6–17
Servicing the Fuel/Water Separator 6–18
Bleeding Air from the Injectors 6–19
Electrical System Maintenance 6–20
Servicing the Battery 6–20
Servicing the Fuses 6–22

Drive System Maintenance 6–22
Checking the Tire Pressure 6–22
Torquing the Wheel Lug Nuts 6–23
Torquing the Axle Hub Nuts 6–23
Adjusting the Traction Drive for Neutral 6–23
Cooling System Maintenance 6–24
Coolant Specifications 6–24
Checking the Coolant Level 6–26
Cleaning the Engine Cooling System 6–26
Brake Maintenance 6–27
Adjusting the Parking Brake 6–27
Belt Maintenance 6–27
Servicing the Engine Belts 6–27
Controls Maintenance 6–29
Adjusting Mow Ground Speed 6–29
Adjusting the Throttle 6–30
Hydraulic System Maintenance 6–30
Hydraulic Fluid Specifications 6–30
Checking the Hydraulic-Fluid Level 6–31
Inspecting the Hydraulic Lines and Hoses 6–32
Changing the Hydraulic Fluid 6–32
Changing the Hydraulic Filter 6–34
Cutting Unit Maintenance 6–34
Checking the Reel-to-Bedknife Contact 6–34
Backlapping the Cutting Units 6–35
Chassis Maintenance 6–37
Inspecting the Seat Belt 6–37
Cleaning 6–37
Washing the Machine 6–37
Chapter 7: Storage 7–1
Storing the Machine 7–1
Storing the Battery 7–1
Chapter 8: Troubleshooting 8–1
Using the Standard Control Module (SCM) 8–1
Troubleshooting the Standard Control Module (SCM) 8–2
The Toro Warranty
California Proposition 65 Warning Information

Intended Use

This machine is a ride-on, reel-blade lawn mower intended to be used by professional, hired operators in commercial applications. It is primarily designed for cutting grass on well-maintained turf. Using this product for purposes other than its intended use could prove dangerous to you and bystanders.

Read this information carefully to learn how to operate and maintain your product properly and to avoid injury and product damage. You are responsible for operating the product properly and safely.

Getting Help

Visit www.Toro.com for product safety and operation training materials, accessory information, help finding a dealer, or to register your product.

Whenever you need service, genuine Toro parts, or additional information, contact an Authorized Service Dealer or Toro Customer Service and have the model and serial numbers of your product ready. These numbers are located on the serial plate on your product (1). Write the numbers in the space provided.

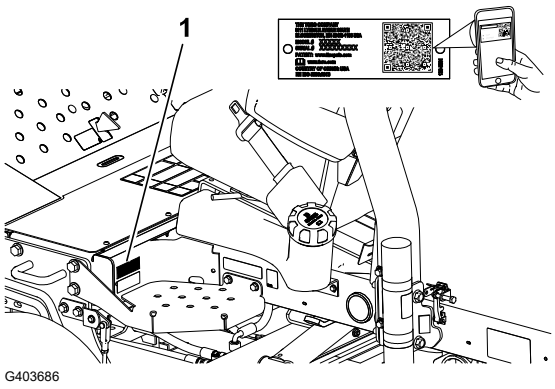

IMPORTANT

With your mobile device, you can scan the QR code on the serial number decal (if equipped) to access warranty, parts, and other product information.

Model Number:		**Serial Number:**	

Manual Conventions

This manual identifies potential hazards and has safety messages identified by the safety-alert symbol, which signals a hazard that may cause serious injury or death if you do not follow the recommended precautions.



G405934

This manual uses 2 words to highlight information. **Important** calls attention to special mechanical information and **Note** emphasizes general information worthy of special attention.

Safety Alert Classifications

The safety-alert symbol shown in this manual and on the machine identifies important safety messages that you must follow to prevent accidents.

Safety-alert symbol appears above information that alerts you to unsafe actions or situations and is followed by the word **DANGER**, **WARNING**, or **CAUTION**.

DANGER

Danger indicates an imminently hazardous situation which, if not avoided, *will* result in death or serious injury.

WARNING

Warning indicates a potentially hazardous situation which, if not avoided, *could* result in death or serious injury.

CAUTION

Caution indicates a potentially hazardous situation which, if not avoided, *may* result in minor or moderate injury.

General Safety

- This product is capable of amputating hands and feet and of throwing objects.
- Read and understand the contents of this *Operator's Manual* before starting the engine.
- Use your full attention while operating the machine. Do not engage in any activity that causes distractions; otherwise, injury or property damage may occur.
- Do not put your hands or feet near moving components of the machine.
- Do not operate the machine without all guards and other safety protective devices in place and functioning properly on the machine.
- Keep bystanders and children out of the operating area. Never allow children to operate the machine.
- Shut off the engine, remove the key, and wait for all movement to stop before you leave the operator's position. Allow the machine to cool before adjusting, servicing, cleaning, or storing it.

Improperly using or maintaining this machine can result in injury. To reduce the potential for injury, comply with these safety instructions and always pay attention to the safety-alert symbol ⚠, which means **Caution**, **Warning**, or **Danger**—personal safety instruction. Failure to comply with these instructions may result in personal injury or death.

Before Operation Safety

- Never allow children or untrained people to operate or service the machine. Local regulations may restrict the age of the operator. The owner is responsible for training all operators and mechanics.
- Become familiar with the safe operation of the machine, operator controls, and safety signs.
- Before you leave the operator's position, do the following:.
  - Park the machine on a level surface
  - Disengage and lower the cutting units.
  - Engage the parking brake.
  - Shut off the engine and remove the key.
  - Wait for all movement to stop.
  - Allow the machine to cool before adjusting, servicing, cleaning, or storing it.
- Know how to stop the machine and shut off the engine quickly.
- Do not operate the machine without all guards and other safety protective devices in place and functioning properly on the machine.

- Before mowing, always inspect the machine to ensure that the cutting units are in good working condition.
- Inspect the area where you will use the machine and remove all objects that the machine could throw.
- This product generates an electromagnetic field. If you wear an implantable electronic medical device, consult your health care professional before using this product.

Fuel Safety

- Use extreme care in handling fuel. It is flammable and its vapors are explosive.
- Extinguish all cigarettes, cigars, pipes, and other sources of ignition.
- Use only an approved fuel container.
- Do not remove the fuel cap or fill the fuel tank while the engine is running or hot.
- Do not add or drain fuel in an enclosed space.
- Do not store the machine or fuel container where there is an open flame, spark, or pilot light, such as on a water heater or other appliance.
- If you spill fuel, do not attempt to start the engine; avoid creating any source of ignition until the fuel vapors have dissipated.

During Operation Safety

- The owner/operator can prevent and is responsible for accidents that may cause personal injury or property damage.
- Wear appropriate clothing, including eye protection; long pants; substantial, slip-resistant footwear; and hearing protection. Tie back long hair and do not wear loose clothing or loose jewelry.
- Do not operate the machine while ill, tired, or under the influence of alcohol or drugs.
- Use your full attention while operating the machine. Do not engage in any activity that causes distractions; otherwise, injury or property damage may occur.
- Before you start the engine, ensure that all drives are in neutral, the parking brake is engaged, and you are in the operating position.
- Do not carry passengers on the machine and keep bystanders and children out of the operating area.
- Operate the machine only in good visibility to avoid holes or hidden hazards.
- Avoid mowing on wet grass. Reduced traction could cause the machine to slide.
- Keep your hands and feet away from the cutting units.
- Look behind and down before backing up to be sure of a clear path.
- Use care when approaching blind corners, shrubs, trees, or other objects that may obscure your vision.
- Stop the cutting units whenever you are not mowing.
- Slow down and use caution when making turns and crossing roads and sidewalks with the machine. Always yield the right-of-way.

- Operate the engine only in well-ventilated areas. Exhaust gasses contain carbon monoxide, which is lethal if inhaled.
- Do not leave a running machine unattended.
- Before you leave the operator's position, do the following:
  - Park the machine on a level surface.
  - Disengage and lower the cutting units.
  - Engage the parking brake.
  - Shut off the engine and remove the key.
  - Wait for all movement to stop.
  - Allow the machine to cool before adjusting, servicing, cleaning, or storing it.
- Operate the machine only in good visibility and appropriate weather conditions. Do not operate the machine when there is the risk of lightning.
- Use the cruise control (if equipped) only when you can operate the machine in an open, flat area that is free from obstacles and where the machine can move at a constant speed without interruption.

Rollover Protection System (ROPS) Safety

- Do not remove any of the ROPS components from the machine.
- Ensure that the seat belt is attached and that you can release it quickly in an emergency.
- Always wear your seat belt.
- Check carefully for overhead obstructions and do not contact them.
- Keep the ROPS in safe operating condition by thoroughly inspecting it periodically for damage and keeping all the mounting fasteners tight.
- Replace all damaged ROPS components. Do not repair or alter them.

Slope Safety

- Slopes are a major factor related to loss of control and rollover accidents, which can result in severe injury or death. You are responsible for safe slope operation. Operating the machine on any slope requires extra caution.
- Evaluate the site conditions to determine if the slope is safe for machine operation, including surveying the site. Always use common sense and good judgment when performing this survey.
- Review the slope instructions, listed below, for operating the machine on slopes. Before you operate the machine, review the site conditions to determine whether you can operate the machine in the conditions on that day and at that site. Changes in the terrain can result in a change in slope operation for the machine.
  - Avoid starting, stopping, or turning the machine on slopes. Avoid making sudden changes in speed or direction. Make turns slowly and gradually.
  - Do not operate a machine under any conditions where traction, steering, or stability is in question.

Slope Safety (continued)

- Remove or mark obstructions such as ditches, holes, ruts, bumps, rocks, or other hidden hazards. Tall grass can hide obstructions. Uneven terrain could overturn the machine.
- Be aware that operating the machine on wet grass, across slopes, or downhill may cause the machine to lose traction.
- Use extreme caution when operating the machine near drop-offs, ditches, embankments, water hazards, or other hazards. The machine could suddenly roll over if a wheel goes over the edge or the edge caves in. Establish a safety area between the machine and any hazard.
- Identify hazards at the base of the slope. If there are hazards, mow the slope with a pedestrian-controlled machine.
- If possible, keep the cutting units lowered to the ground while operating on slopes. Raising the cutting units while operating on slopes can cause the machine to become unstable.

This triplex mower has a unique drive system for superior traction on hills. The uphill wheel does not spin out and limit traction like conventional triplex mowers. If you operate the machine on a side hill that is too steep, rollover will occur before losing traction.

- When possible, mow up and down a hill rather than across it.
- On side hills, shift the cutting units uphill (if equipped).
- If the tires lose traction, disengage the blade(s) and proceed slowly straight down the slope.
- If you must turn, turn slowly and gradually downhill, if possible.

After Operation Safety

- Park the machine on a level surface.
- Disengage and lower the cutting units
- Engage the parking brake.
- Shut off the engine and remove the key.
- Wait for all movement to stop.
- Allow the machine to cool before adjusting, servicing, cleaning, or storing it.
- To help prevent fires, ensure that the cutting units, drives, mufflers, cooling screens, and engine compartment are free from grass and debris buildup. Clean up oil or fuel spills.
- Disengage the drive to the attachment whenever you are hauling or not using the machine.
- Maintain and clean the seat belt(s) as necessary.
- Do not store the machine or fuel container where there is an open flame, spark, or pilot light, such as on a water heater or on other appliances.

Maintenance Safety

- Before you leave the operator's position, do the following:
  - Park the machine on a level surface.
  - Disengage and lower the cutting units.
  - Engage the parking brake.
  - Shut off the engine and remove the key.
  - Wait for all movement to stop.
  - Allow the machine to cool before adjusting, servicing, cleaning, or storing it.
- Wear appropriate clothing, including eye-protection; long pants and substantial, slip-resistant footwear. Keep hands, feet, clothing, jewelry, and long hair away from moving parts.
- Allow machine components to cool before performing maintenance.
- If possible, do not perform maintenance while the engine is running. Keep away from moving parts.
- Operate the engine only in well-ventilated areas. Exhaust gases contain carbon monoxide, which is lethal if inhaled.
- Support the machine with jack stands whenever you work under the machine.
- Carefully release pressure from components with stored energy.
- Keep all parts of the machine in good working condition and all hardware tightened.
- Replace all worn or damaged decals.
- To ensure safe, optimal performance of the machine, use only genuine Toro replacement parts. Replacement parts made by other manufacturers could be dangerous, and such use could void the product warranty.

Engine Safety

- Shut off the engine before checking the oil or adding oil to the crankcase.
- Do not change the governor speed or overspeed the engine.

Electrical System Safety

- Disconnect the battery before repairing the machine. Disconnect the negative terminal first and the positive last. Connect the positive terminal first and the negative last.
- Charge the battery in an open, well-ventilated area, away from sparks and flames. Unplug the charger before connecting or disconnecting the battery. Wear protective clothing and use insulated tools.

Cooling System Safety

- Swallowing engine coolant can cause poisoning; keep out of reach from children and pets.

Cooling System Safety (continued)

- Discharge of hot, pressurized coolant or touching a hot radiator and surrounding parts can cause severe burns.
  - Always allow the engine to cool at least 15 minutes before removing the radiator cap.
  - Use a rag when opening the radiator cap, and open the cap slowly to allow steam to escape.

Hydraulic System Safety

- Seek immediate medical attention if fluid is injected into skin. Injected fluid must be surgically removed within a few hours by a doctor.
- Ensure that all hydraulic-fluid hoses and lines are in good condition and all hydraulic connections and fittings are tight before applying pressure to the hydraulic system.
- Keep your body and hands away from pinhole leaks or nozzles that eject high-pressure hydraulic fluid.
- Use cardboard or paper to find hydraulic leaks.
- Safely relieve all pressure in the hydraulic system before performing any work on the hydraulic system.

Blade Safety

- A worn or damaged blade or bedknife can break, and a piece could be thrown toward you or bystanders, resulting in serious personal injury or death.
- Inspect the blades and bedknives periodically for excessive wear or damage.
- Use care when checking the blades. Wear gloves and use caution when servicing them. Only replace or backlap the blades and bedknives; never straighten or weld them.
- On machines with multiple cutting units, take care when rotating a cutting unit; it can cause the reels in the other cutting units to rotate.

Storage Safety

- Before you leave the operator’s position, do the following:
  - Park the machine on a level surface.
  - Disengage and lower the cutting units.
  - Engage the parking brake.
  - Shut off the engine and remove the key.
  - Wait for all movement to stop.
  - Allow the machine to cool before adjusting, servicing, cleaning, or storing it.
- Do not store the machine or fuel container where there is an open flame, spark, or pilot light, such as on a water heater or other appliance.

Safety and Instructional Decals

Safety decals and instructions are easily visible to the operator and are located near any area of potential danger. Replace any decal that is damaged or missing.

Battery Symbols

Some or all of these symbols are on your battery.



s_batterysymbols2

1. Explosion hazard
2. No fire, open flame, or smoking
3. Caustic liquid/chemical burn hazard
4. Wear eye protection.
5. Read the *Operator's Manual*.
6. Keep bystanders away from the battery.
7. Wear eye protection; explosive gases can cause blindness and other injuries.
8. Battery acid can cause blindness or severe burns.
9. Flush eyes immediately with water and get medical help fast.
10. Contains lead; do not discard

Decal Part: 93-6681

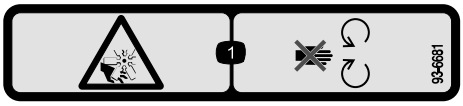

s_decal93-6681

1. Cutting/dismemberment hazard, fan—stay away from moving parts.

Decal Part: 93-7276

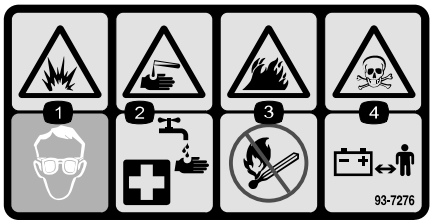

s_decal93-7276

1. Explosion hazard—wear eye protection.
2. Caustic liquid/chemical burn hazard—to perform first aid, flush with water.
3. Fire hazard—no fire, open flames, or smoking.
4. Poison hazard—keep children away from the battery.

Decal Part: 94-3353

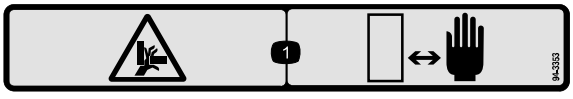

s_decal94-3353

1. Crushing hazard of hand—keep hands away.

Decal Part: 99-3444

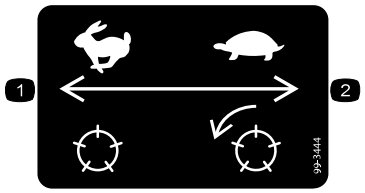

s_decal99-3444

1. Transport speed—fast
2. Mowing speed—slow

Decal Part: 106-9290

Model 03170

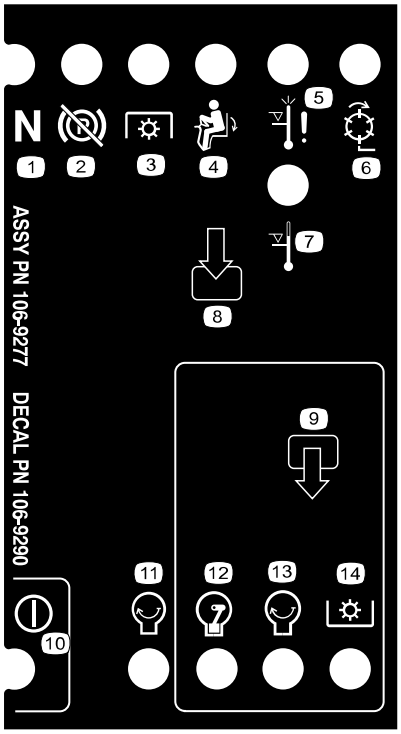

s_decal106-9290

1. Neutral
2. Parking brake—Off
3. PTO
4. In seat
5. High temperature shutdown
6. Reels—active
7. High temperature warning
8. Inputs
9. Outputs
10. Power
11. Engine—Start
12. Engine—Run
13. Engine—Start
14. PTO

Decal Part: 117-3270

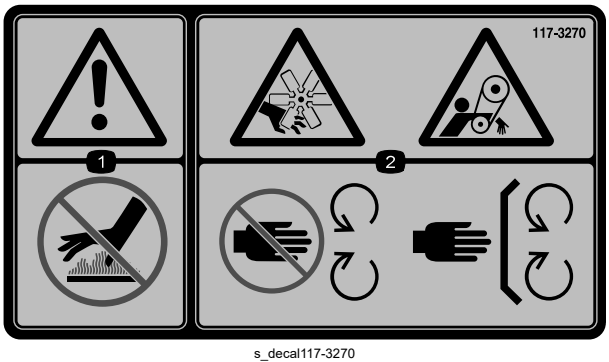

s_decal117-3270

1. Warning—do not touch the hot surface.
2. Cutting/dismemberment hazard, hand; entanglement hazard, belt—stay away from moving parts, keep all guards and shields in place.

Decal Part: 121-3598

CE Machines

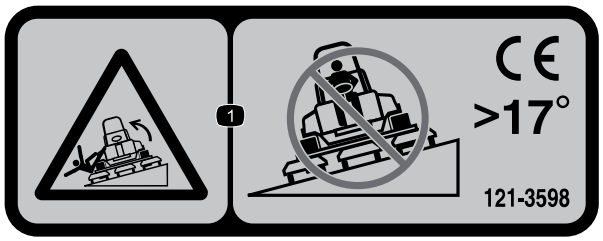

s_decal121-3598

1 Tipping hazard—do not drive across slopes greater than 17°.

Note: This machine complies with the industry standard stability test in the static lateral and longitudinal tests with the maximum recommended slope indicated on the decal. Review the instructions for operating the machine on slopes in the *Operator's Manual* as well as the conditions in which you would operate the machine to determine whether you can operate the machine in the conditions on that day and at that site. Changes in the terrain can result in a change in slope operation for the machine. If possible, keep the cutting units lowered to the ground while operating the machine on slopes. Raising the cutting units while operating on slopes can cause the machine to become unstable.

Decal Part: 121-3623

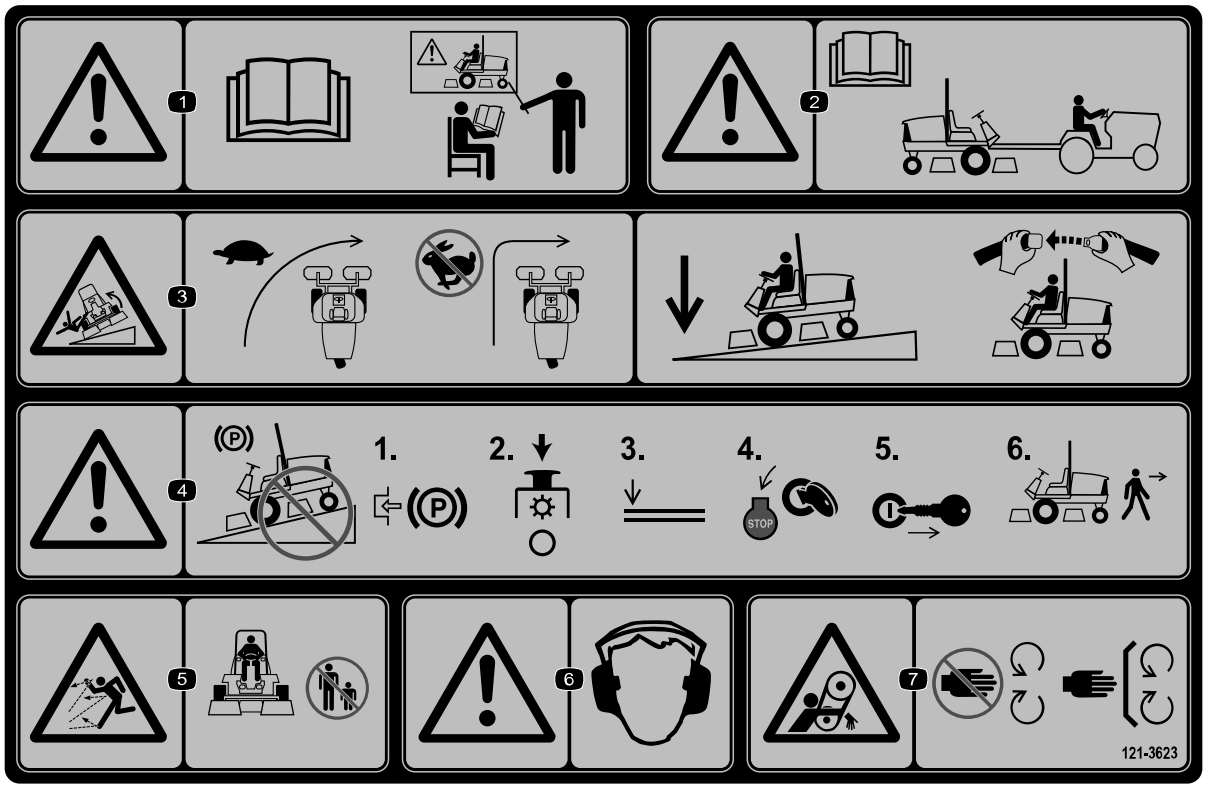

s_decal121-3623

1. Warning—read the *Operator's Manual*; do not operate the machine unless you have received training.
2. Warning—read the *Operator's Manual* before towing the machine.
3. Tipping hazard—slow the machine before turning; when driving on slopes, keep the cutting units lowered and your seatbelt fastened.
4. Warning—do not park on slopes; engage the parking brake, stop the cutting units, lower the attachments, shut off the engine, and remove the key from the ignition before leaving the machine.
5. Thrown object hazard—keep bystanders away.
6. Warning—wear hearing protection.
7. Entanglement hazard—keep away from moving parts; keep all guards and shields in place.

Decal Part: 121-3628

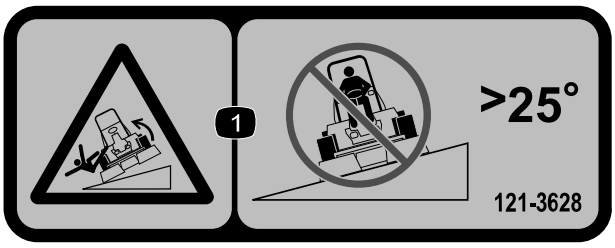

s_decal121-3628

1. Tipping hazard—do not drive across slopes greater than 25°.

Note: This machine complies with the industry standard stability test in the static lateral and longitudinal tests with the maximum recommended slope indicated on the decal. Review the instructions for operating the machine on slopes in the *Operator's Manual* as well as the conditions in which you would operate the machine to determine whether you can operate the machine in the conditions on that day and at that site. Changes in the terrain can result in a change in slope operation for the machine. If possible, keep the cutting units lowered to the ground while operating the machine on slopes. Raising the cutting units while operating on slopes can cause the machine to become unstable.

Decal Part: 125-6688

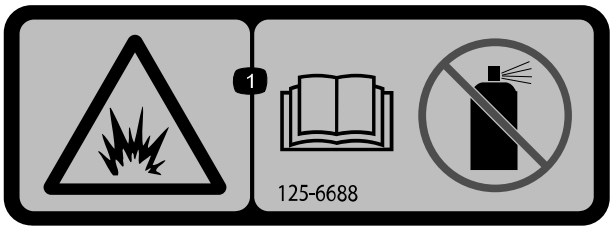

s_decal125-6688

1 Explosion hazard—Read the *Operator's Manual*; Do not use starting fluid.

Decal Part: 133-8062



s_decal133-8062

Decal Part: 136-3678

Model 03170

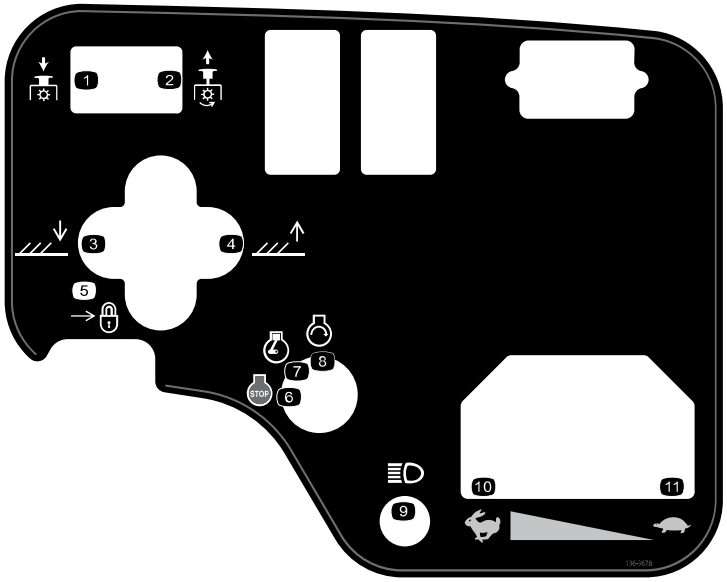

s_decal136-3678

1. PTO—Disengage
2. PTO—Engage
3. Lower the cutting units.
4. Raise the cutting units.
5. Lock
6. Engine—Shut off
7. Engine—Run
8. Engine—Start
9. Lights
10. Fast
11. Slow

Decal Part: 136-3679

Model 03171

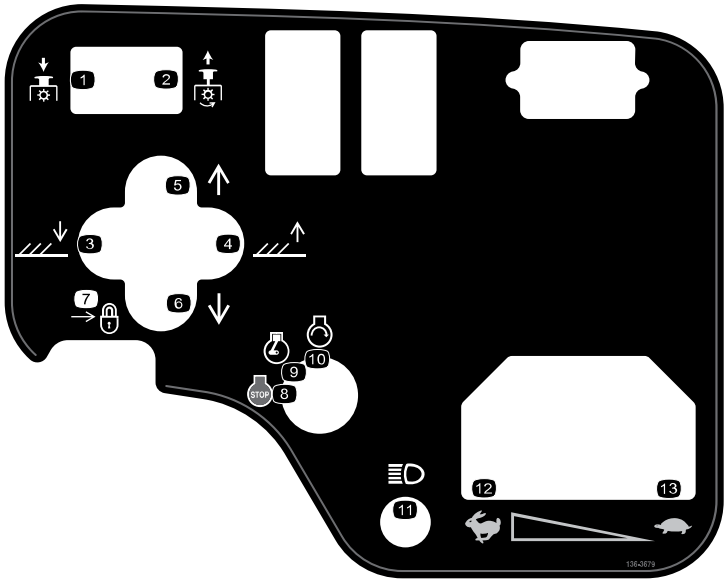

s_decal136-3679

1. PTO—Disengage
2. PTO—Engage
3. Lower the cutting units.
4. Raise the cutting units.
5. Shift the cutting units to the right.
6. Shift the cutting units to the left.
7. Lock
8. Engine—Shut off
9. Engine—Run
10. Engine—Start
11. Lights
12. Fast
13. Slow

Decal Part: 136-3702

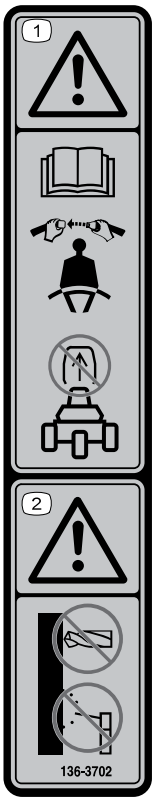

s_decal136-3702

1. Warning—Read the *Operator's Manual*; wear a seatbelt; do not remove the roll bar.
2. Warning—Do not modify the roll bar.

Decal Part: 136-3716

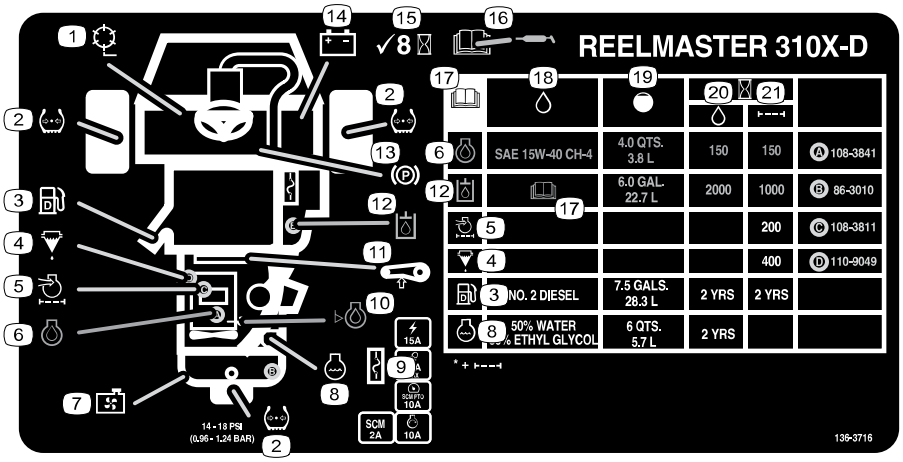

s_decal136-3716

1. Reel speed
2. Tire pressure
3. Diesel fuel
4. Fuel/water separator
5. Engine air filter
6. Engine oil
7. Radiator screen
8. Engine coolant
9. Fuses
10. Engine-oil level
11. Belt tension
12. Hydraulic fluid
13. Parking brake
14. Battery
15. Check every 8 hours.
16. Read the *Operator's Manual* for lubrication information.
17. Read the *Operator's Manual*.
18. Fluids
19. Capacity
20. Fluid interval (hours)
21. Filter interval (hours)

Decal Part: 147-6069

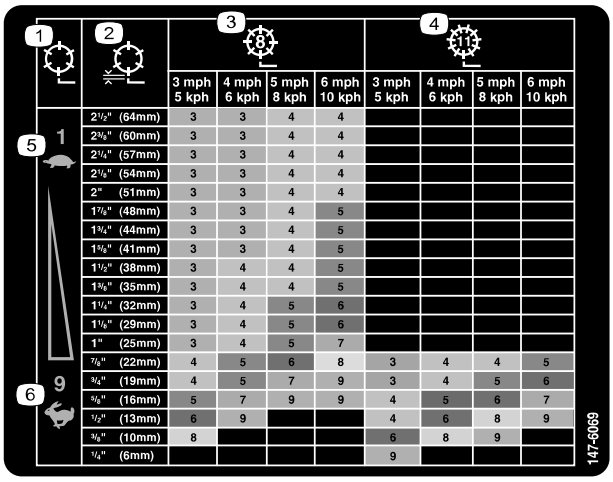

s_decal147-6069

1. Reel speed
2. Reel height of cut
3. 8-blade reel adjustment
4. 11-blade reel adjustment
5. Slow
6. Fast

1 Installing the Wheels

Parts Required

2	Front wheel assembly
1	Rear wheel assembly

1. Mount a wheel assembly onto the wheel hub with the valve stem aligned outward.

   Note: The rear wheel is narrower than the front wheels.



2. Secure the wheel to the hub with the lug nuts, and torque the nuts in a crossing pattern to **61 to 88 N·m (45 to 65 ft-lb)**.
3. Repeat the procedure for the other wheel assemblies.

2 Installing the Steering Wheel

Parts Required

1	Steering wheel
1	Steering-wheel cap
1	Large washer
1	Jam nut
1	Screw

1. Install the steering wheel as shown.

2. Torque the nut to **27 to 35 N·m (20 to 26 ft-lb)**.

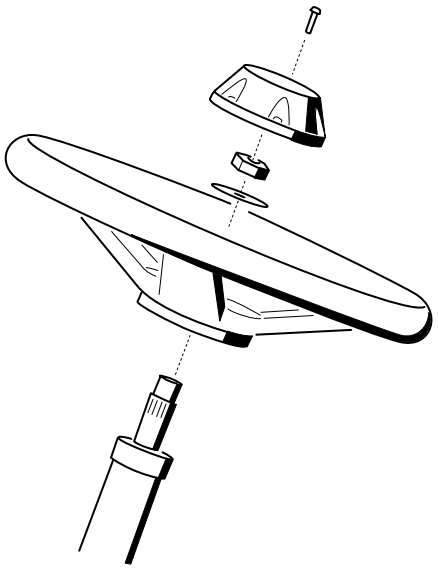

3 Charging and Connecting the Battery

DANGER

Battery electrolyte contains sulfuric acid, which is lethal if consumed and causes severe burns.

- **Do not drink electrolyte and avoid contact with skin, eyes, or clothing.**
- **Wear safety glasses and rubber gloves.**
- **Fill the battery where clean water is always available for flushing the skin.**

---

1. Remove the battery cover.
2. Measure the battery voltage.

   Note: If you measure 12.4 V or higher, the battery is charged.
3. If you measure 12.3 V or less, charge the battery at a rate of 3 to 4 A for 4 to 8 hours.

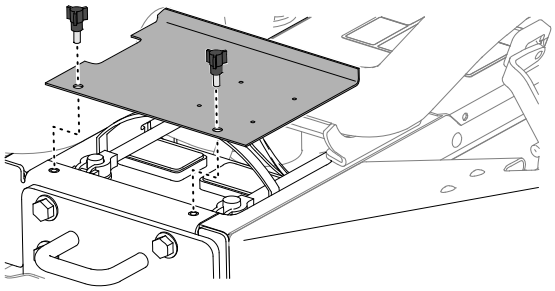

G402553.svg

WARNING

Charging the battery produces gasses that can explode, which could result in death or serious injury.

- **Keep sparks and flames away from the battery.**
- **Never smoke near the battery.**

---

4. When the battery is charged, disconnect the charger from the electrical outlet and battery posts.
5. Install the positive cable (red) ① to the positive (+) battery terminal, and secure them with T-bolt and nut.

   Note: Ensure that the positive (+) terminal is all the way onto the post and the cable is positioned snug to the battery.

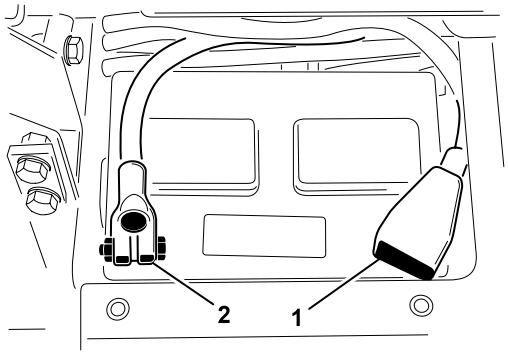

G402557

IMPORTANT

The cable must not contact the battery cover.

6. Install the negative cable (black) (2) to the negative (–) battery terminal of the battery, and secure them with T-bolt and nut.

WARNING

Incorrectly routing the battery cable could damage the machine and cables, causing sparks. Sparks can cause the battery gasses to explode, which could result in death or serious injury.

- **Always disconnect the negative (black) battery cable before disconnecting the positive (red) cable.**
- **Always connect the positive (red) battery cable before connecting the negative (black) cable.**

IMPORTANT

If you ever remove the battery, ensure that the battery clamp bolts are installed with the bolt heads positioned on the bottom side and the nuts on the top side. If the clamp bolts are reversed, they may interfere with the hydraulic tubes when you shift the cutting units.

7. Coat both battery connections with Grafo 112X skin-over grease (Toro Part No. 505-47) or light grease to prevent corrosion.
8. Slide the rubber boot over the positive terminal to prevent a possible short from occurring.
9. Install the battery cover.

4 Checking the Slope Indicator

Parts Required

1	Angle indicator (handheld)

1. Park the machine on a flat surface.
2. Verify that the machine is level by placing the handheld angle indicator (2) on the frame cross rail (1).
3. If the handheld angle indicator does not read 0°, move the machine to a location where you can attain a 0° reading.

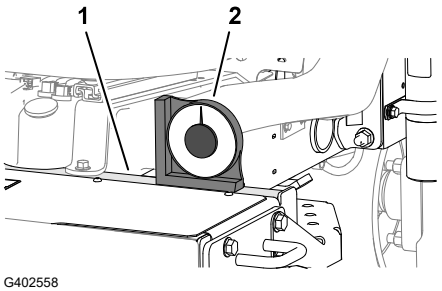

G402558

4. Check the slope indicator [1] mounted on the steering tube of the machine.

   Note: The slope indicator should read 0° when viewed from the operator's position.

5. If the slope indicator does not read 0°, loosen the hardware securing the angle indicator to the mounting bracket, adjust the indicator to attain a 0° reading, and tighten the hardware.

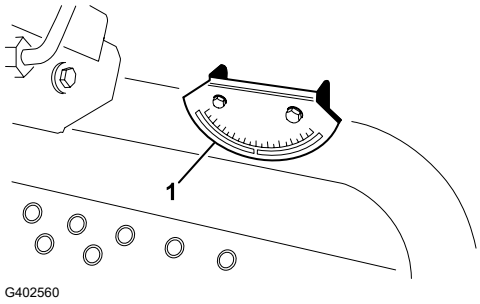

5 Installing the Roll Bar

Parts Required

1	Roll-bar assembly
4	Flange-head bolt
4	Locknut
1	Hose clamp

WARNING

Operating the machine with a modified or damaged roll bar may not adequately protect you in a rollover, which could result in death or serious injury.

- **Do not install a damaged or modified roll bar on the machine.**
- **Replace a damaged roll bar; do not repair or alter it.**

1. Lower the roll bar [1] onto the traction unit mounting brackets [2], aligning the mounting holes. Ensure that the vent tube [3] is on the left side of the machine.

2. Secure each side of the roll bar to the mounting brackets with 2 flange head bolts and 2 locknuts. Torque the hardware to **81 N·m (60 ft-lb)**.

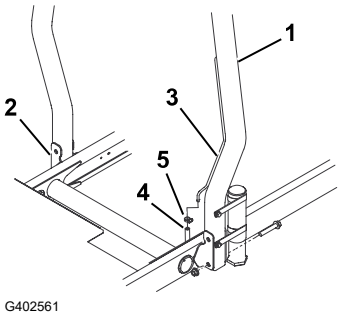

3. Secure the fuel-line-vent hose [4] to the vent tube with the hose clamp [5].

CAUTION

Starting the engine with the fuel-line-vent hose disconnected from the vent tube will cause fuel to flow from the hose, increasing the risk of fire or explosion. A fire or explosion from fuel could result in death or serious injury.

Connect the fuel-line-vent hose to the vent tube before starting the engine.

6 Installing the Front Lift Arms

Parts Required

1	Lift arm kit (optional kit—order separately)

Preparing to Install the Lift Arms

1. Insert a pivot rod ② into each lift arm ① and align the mounting holes.
2. Secure the pivot rods to the lift arms with 2 bolts (5/16 x 7/8 inch).



3. Torque the bolts to **37 to 45 N·m (27 to 33 ft-lb)**.
4. At the front of the machine, remove the 2 flange bolts (1/2 x 2 inches) that secure the pivot-shaft link ① to the lift arm pivot shafts ②, and remove the link.

   Note: Retain the pivot-shaft link and the flange bolts.

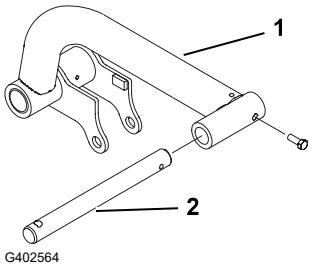

G402564

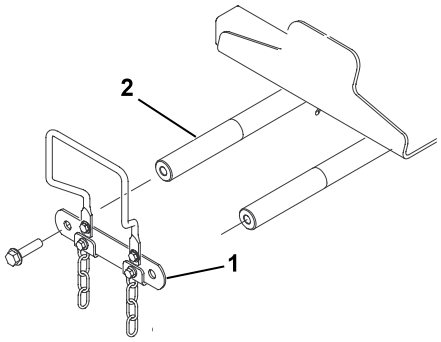

G402566

Assembling the Lift Arms to the Machine

1. Assemble the lift arms ③ onto the lift-arm-pivot shafts ④ as shown.
2. Assemble the previously-removed pivot-shaft link ② to the lift-arm-pivot shafts with the 2 flange bolts (1/2 x 2 inches) ①.



3. Torque the flange bolts (1/2 x 2 inches) to **95 N·m (70 ft-lb)**.

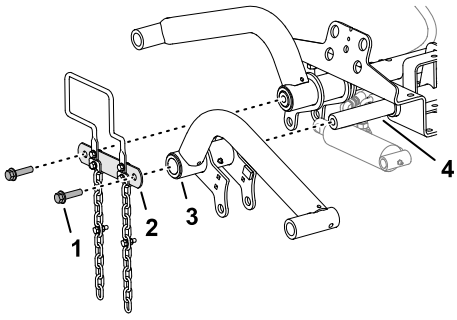

G402567

Assembling the Lift Cylinder to the Left Lift Arm

1. Assembly the lift cylinder to the left lift arm as shown.
2. Apply No. 2 lithium grease to the grease fittings ① of the lift arm and the hydraulic cylinder.

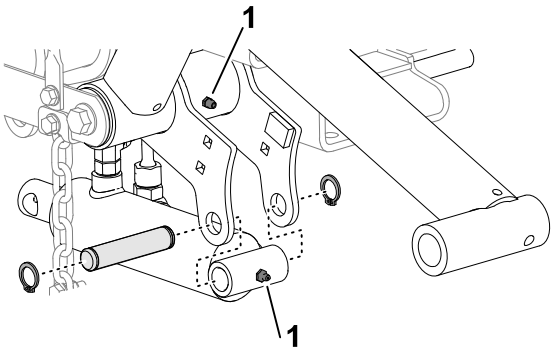

G402568

Assembling the Lift Cylinder to the Right Lift Arm

1. Align a drain pan below the hydraulic fittings of the lift cylinder.

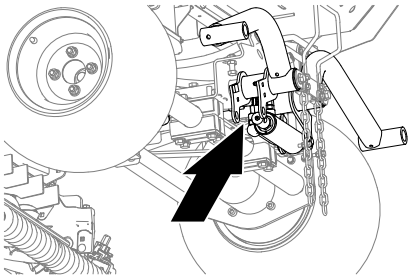
G402572

2. At the lift cylinder, loosen the straight swivel fitting ① of the return hose and the 90° swivel fitting ② of the lift hose.
3. Wrap a rag around the hose fittings.

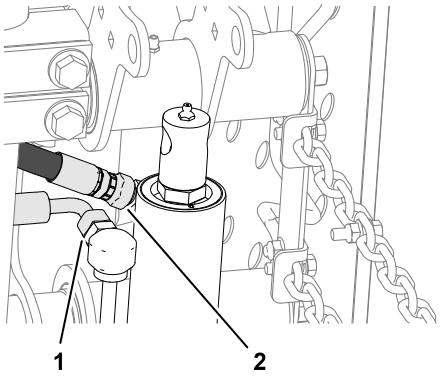

G402570

4. Slowly move the lift-cylinder rod ⑤ until it aligns with the holes in the right lift-arm flanges ②.

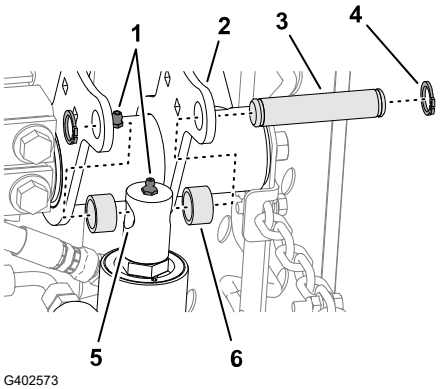

G402573

Assembling the Lift Cylinder to the Right Lift Arm (continued)

IMPORTANT

Some hydraulic fluid is forced out at the hose fittings when you move the lift-cylinder rod.

5. Assemble the rod to the flanges with the mounting pin (3), 2 spacers (6), and 2 snap rings (4).
6. Apply No. 2 lithium grease to the grease fittings (1) of the lift arm and the hydraulic cylinder.
7. Torque the swivel fittings of the return (1) and lift hoses (2) to **37 to 45 N·m (27 to 33 ft-lb)**.
8. Clean hydraulic fluid from the machine.

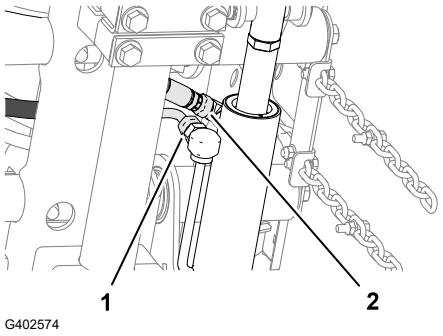

7 Installing the Carrier Frames to the Cutting Units

Parts Required

3	Cutting Unit (optional part—order separately)

Preparing the Cutting Units

1. Remove the cutting units from the cartons.
2. Adjust the cutting units as instructed in the *Operator's Manual* for the cutting units.

Assembling the Carrier Frames for the Front Cutting Units

Cutting Unit with Links

Note: The front carrier frames are part of the optional lift arm kit.

Assembling the Carrier Frames for the Front Cutting Units (continued)

1. Align the holes in the plates of the front-carrier frame with the holes in the cutting unit mounting plates.

   Note: If you are starting assembly at the back of the cutting unit, use the middle hole of the plate.

2. Assemble the cutting unit to the rear carrier frame as shown.

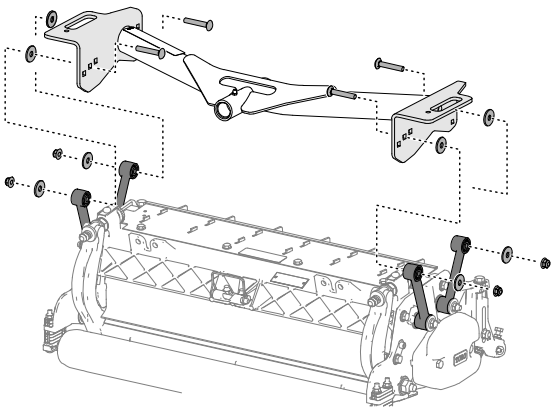

G402575

3. Torque the flange locknuts to **37 to 45 N·m (27 to 33 ft-lb)**.
4. Repeat this procedure for the other front cutting unit and carrier frame.

Assembling the Cutting Unit and Rear Carrier Frame

Cutting Unit with Links

Note: The rear carrier frame is part of the optional lift arm kit.

1. Align the hole in the plates of the rear-carrier frame with the hole in the cutting unit mounting plates.

   Note: If you are starting assembly at the back of the cutting unit, use the middle hole of the plate.

2. Assemble the cutting unit to the rear carrier frame as shown.

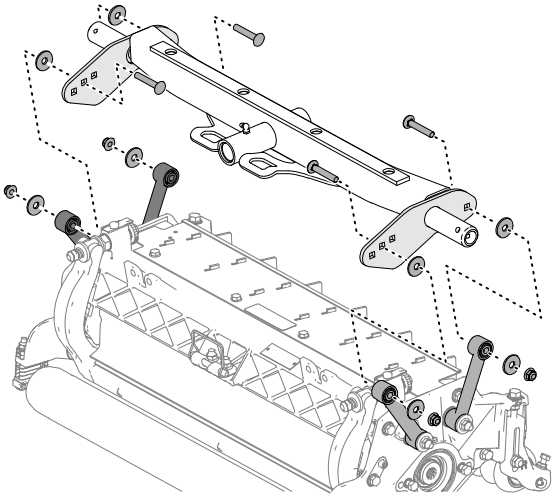

G402576

3. Torque the flange locknuts to **37 to 45 N·m (27 to 33 ft-lb)**.

Assembling the Carrier Frames for the Front Cutting Units

Cutting Unit with Mounting Plates

Note: The front carrier frames are part of the optional lift arm kit.

Assembling the Carrier Frames for the Front Cutting Units (continued)

1. Align the holes in the plates of the front-carrier frame with the holes in the cutting unit mounting plates.

   Note: If you are starting assembly at the back of the cutting unit, use the middle holes of each plate.

2. Assemble the cutting unit to the carrier frame as shown.

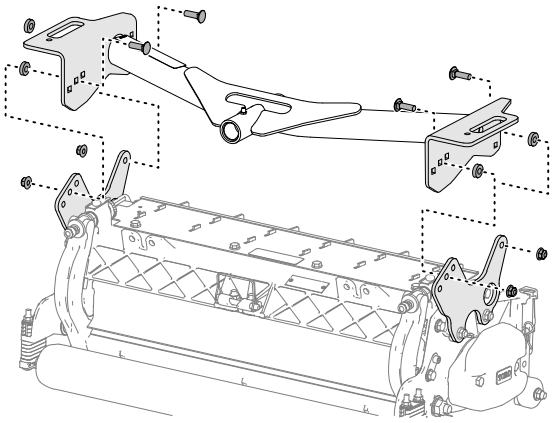

G402577

3. Torque the flange locknuts to **37 to 45 N·m (27 to 33 ft-lb)**.
4. Repeat this procedure for the other front cutting unit and carrier frame.

Assembling the Cutting Unit and Rear Carrier Frame

Cutting Unit with Mounting Plates

Note: The rear carrier frame is part of the optional lift arm kit.

1. Align the holes in the plates of the rear-carrier frame with the holes in the cutting unit mounting plates.

   Note: If you are starting assembly at the back of the cutting unit, use the middle holes of each plate.

2. Assemble the cutting unit to the carrier frame as shown.

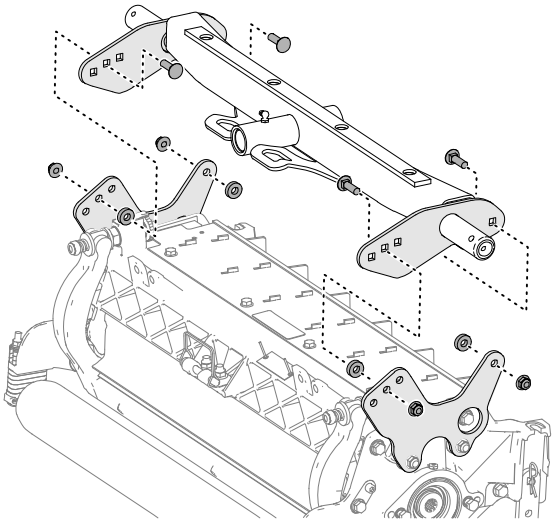

G402578

3. Torque the flange locknuts to **37 to 45 N·m (27 to 33 ft-lb)**.

8 Installing the Cutting Units

1. Slide a thrust washer ① onto each lift-arm pivot rod.
2. Slide the cutting-unit-carrier frame ② onto the pivot rod and secure it with a lynch pin ③.

   Note: On rear cutting units, position the thrust washer between the rear of the carrier frame and the lynch pin.
3. Grease all lift arm and carrier frame pivot points.

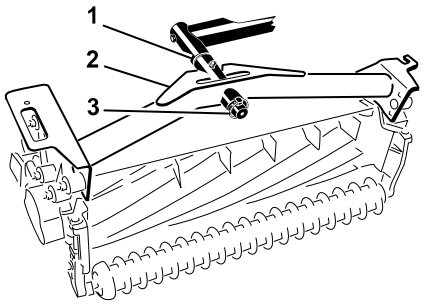

G402579

IMPORTANT

Ensure that the hoses are free of twists or sharp bends and that the rear cutting unit hoses are routed as shown. Raise the cutting units and shift them to the left (Model 03171). The rear cutting unit hoses must not contact the traction cable bracket. Reposition the fittings and/or hoses if necessary.

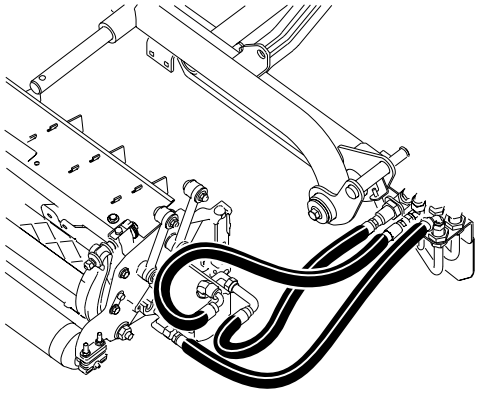
G402580

4. Route a tipper chain ① up through the slot on the end of each carrier frame. Secure the tipper chain to the top of the carrier frame with a bolt and a locknut.

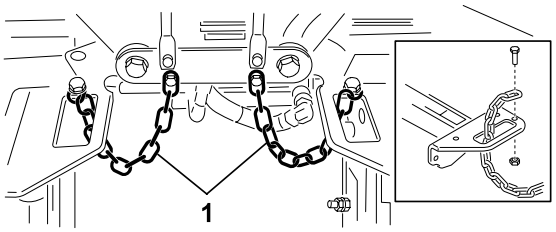

G530097

9 Installing the Cutting Unit Drive Motors

1. Position the cutting units in front of the lift-arm-pivot rods.
2. Remove the weight (2), O-ring (1), and 2 mounting bolts (3) from the end of the right cutting unit.
3. Remove the plug from the bearing housing and install the weight and O-ring.
4. Repeat steps 2 and 3 on the remaining cutting units.

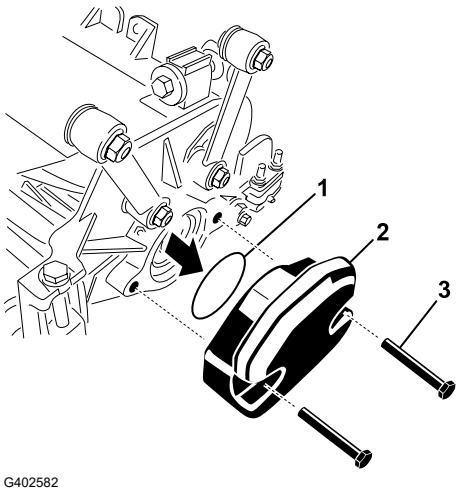

G402582

5. Insert the O-ring (1) on the flange of the drive motor (2).
6. Mount the motor to the drive end of the cutting unit, and secure it with 2 bolts.

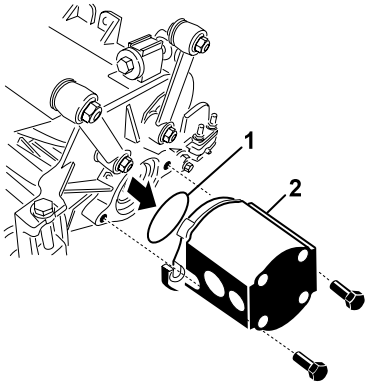

G402583

10 Adjusting the Lift Arms

Checking Lift Arm and Rear Cutting Unit Clearance

1. Start the engine, raise the cutting units, shut off the engine, remove the key, and wait for all moving parts to stop.
2. At the front cutting units, measure the distance between the left lift arm (1) and the floor plate bracket (2), and the right lift arm and the floor plate bracket.

   Note: The correct clearance is 5 to 8 mm (3/16 to 5/16 inch) (3). If the clearance is not in this range, adjust the cutting unit lift cylinder.

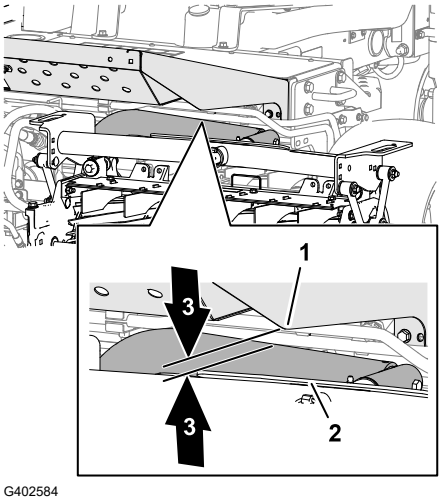

G402584

Checking Lift Arm and Rear Cutting Unit Clearance (continued)

IMPORTANT

A lack of clearance at the front plate bracket could damage the lift arms.

3. At the rear cutting unit, measure the clearance between the wear strap on the top of the rear cutting unit wear bar (2) and the bumper stop (1).

   Note: The correct clearance is 0.51 to 2.54 mm (0.02 to 0.10 inch) (3). If the clearance is not in this range, adjust the cutting unit lift cylinder.

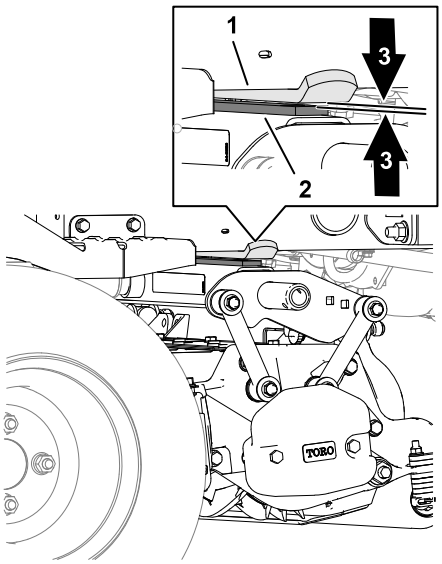

G402585

IMPORTANT

A lack of clearance at the rear wear bar could damage the cutting unit.

4. Start the engine, lower the cutting units, shut off the engine, remove the key, and wait for all moving parts to stop.

Adjusting the Lift-Arm Clearance

1. At each side of the machine, loosen the jam nuts (1) and back off the lift arm-stop bolts (2).

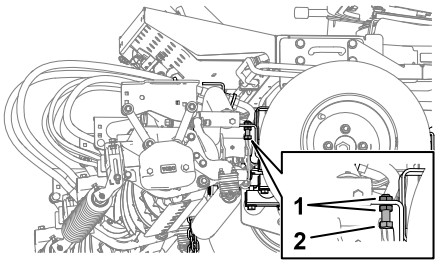

G402586

Adjusting the Lift-Arm Clearance (continued)

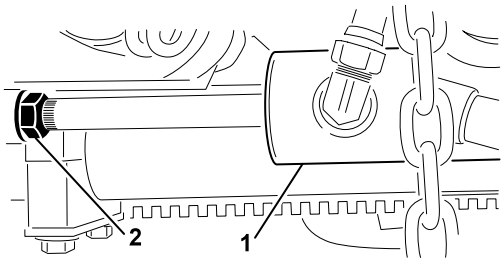

G402587

2. Loosen the jam nut ② on the lift-cylinder rod ①.
3. Remove the pin from the rod end and rotate the clevis jam nut.
4. Install the pin and check the clearance.
5. Repeat steps 1 through 4 if necessary.
6. Start the engine, raise the cutting units, shut off the engine, remove the key and wait for all moving parts to stop.
7. Measure the distance between the left and right lift arms and the floor plate brackets.

   Note: The correct clearance is 0.51 to 2.54 mm (0.02 to 0.10 inch).
8. Repeat steps 6 and 7 as needed.
9. Tighten the clevis jam nut.
10. Repeat steps 1 through 9 on the other side of the machine.

Adjusting the Lift-Arm Stop Bolts

IMPORTANT

A lack of clearance at the stop bolts could damage the lift arms.

Note: If the rear lift arm clunks during transport, reduce the clearance.

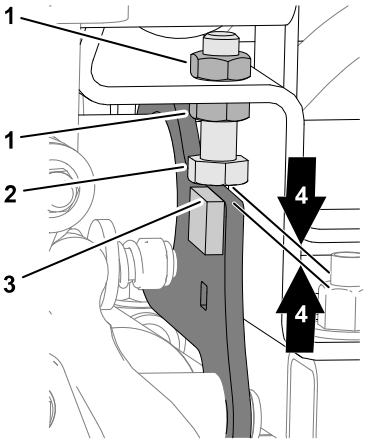

G402588

1. Start the engine, raise the cutting units, shut off the engine, remove the key, and wait for all moving parts to stop.
2. Adjust the jam nuts ① and stop bolt ② until you measure 0.13 to 1.02 mm (0.005 to 0.040 inches) ④ between the stop bolt and the lift-arm plate ③.
3. Repeat Step 2 for the other lift arm.
4. Start the engine, lower the cutting units, shut off the engine, remove the key, and wait for all moving parts to stop.

Adjusting the Rear Cutting Unit Clearance

1. Loosen the jam nut ② on the lift cylinder rod ①.

Adjusting the Rear Cutting Unit Clearance (continued)

2. Grasp the cylinder rod close to the jam nut with a pliers and rag, and rotate the rod.

   Note: Shortening the rod reduces wear strap and bumper stop clearance.

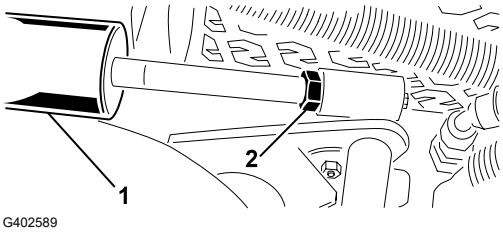

3. Start the engine, raise the cutting units, shut off the engine, remove the key, and wait for all moving parts to stop.
4. Measure the clearance between the wear strap on the top of the rear cutting unit wear bar and the bumper stop.

   Note: The correct clearance is 0.51 to 2.54 mm (0.02 to 0.10 inch).
5. Repeat steps 1 through 4 as needed.
6. Start the engine, lower the cutting units, shut off the engine, remove the key, and wait for all moving parts to stop.
7. Tighten the jam nut.

11 Preparing the Machine

1. Park the machine on a level surface, lower the cutting units, and engage the parking brake.
2. Shut off the engine, remove the key, and wait for all moving parts to stop.
3. Check the tire air pressure and adjust if needed.

   Note: The tires are overinflated for shipping.
4. Check the hydraulic-fluid level.
5. Grease the machine.

   Note: Failure to properly grease the machine will result in premature failure of critical parts.
6. Open the hood and check the coolant level.
7. Check the level of the engine-oil level, and close and latch the hood.

   Note: The engine ships with oil in the crankcase; however, check the oil level before and after the engine is first started.

12 Installing the Hood Latch

CE Machines

Parts Required

1	Hood-latch bracket
2	Rivet
1	Washer
1	Screw (1/4 x 2 inches)
1	Locknut (1/4 inch)

1. Unhook the hood latch from the hood-latch bracket.
2. Remove the 2 rivets (2) and the hood-latch bracket (1) from the hood.

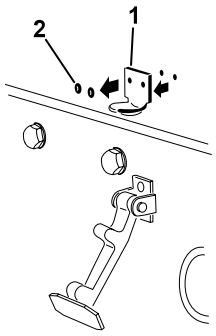

G402590

3. While aligning the mounting holes, position the CE latch bracket (1) and the hood-latch bracket onto the hood.

   Note: The latch bracket must be against the hood.

   Do not remove the bolt and nut assembly (2) from the latch-bracket arm.

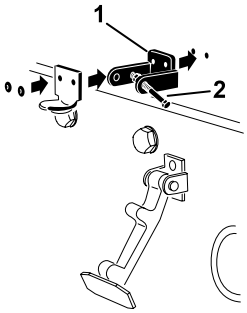

G402591

4. Align the washers with the holes on the inside of the hood.
5. Rivet the brackets and the washers to the hood.
6. Hook the latch (1) onto the hood-latch bracket

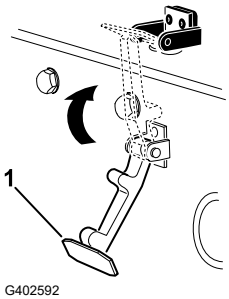

G402592

7. Screw the bolt 3 into the other arm of hood-latch bracket 2 to lock the latch in position.

   Note: Tighten the nut 1 and bolt until the bolt no longer moves forward and backward in the hood-latch bracket.

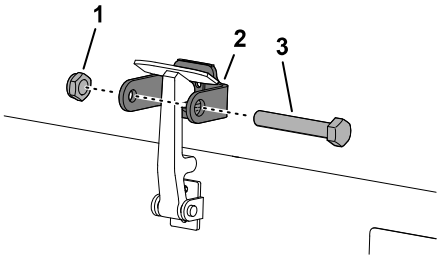

G402593

13 Installing the Exhaust Guard

CE Machines

Parts Required

1	Exhaust guard
4	Self-tapping screw

Position and secure the exhaust guard 1 to the frame with 4 self-tapping screws.

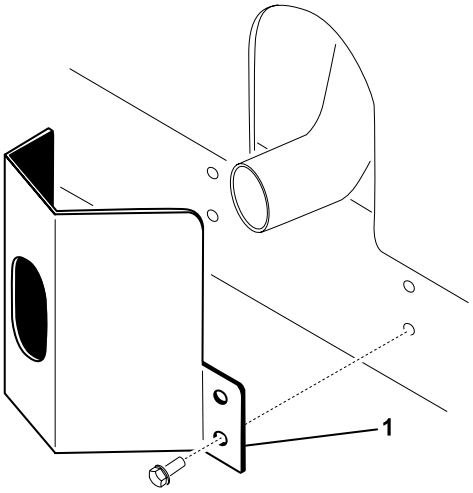

G402594

14 Installing the CE Decals

CE Machines

Parts Required

1	Year of production decal
1	CE decal
1	Tilt danger decal

Applying the Year of Production Decal and CE Decal

1. Wipe the left frame, near the model/serial plate ①, with alcohol and allow the frame to dry.
2. Remove the backing and apply the Year of Production decal ② to the frame near the serial plate.

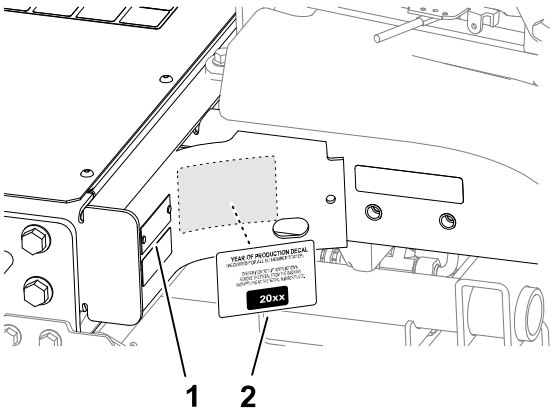

G411007

3. Wipe the left frame, near the hood lock ①, with alcohol and allow the frame to dry.
4. Remove the backing and apply the CE decal ② to the frame.

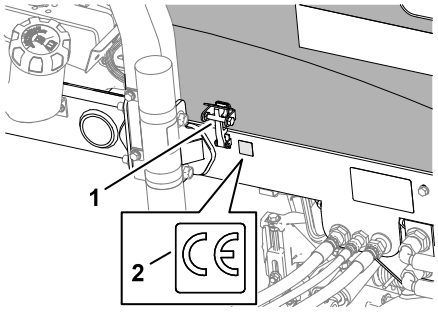

G402596

Applying the CE Tilt Danger Decal

1. Wipe the tilt decal on the slope indicator ② with alcohol and allow the decal to dry.
2. Remove the backing and apply the CE tilt danger decal ① as shown.

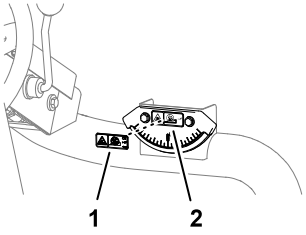

G402597

15 Installing the Tipper Roller Kit (Optional)

Parts Required

1	Tipper roller kit (not included)

When cutting in higher heights of cut, install the Tipper Roller Kit.

1. Raise the cutting units.

2. Locate the frame bracket ① above the center cutting unit.
3. Press down on the front roller of the center cutting unit and align the holes on the tipper bracket ② with the frame bracket holes to attain the same roller contact when the tipper bracket is installed.

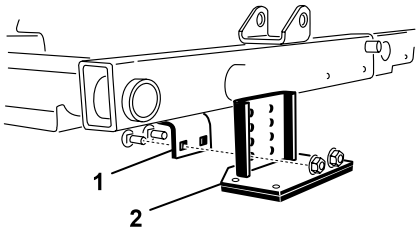

G402598

4. Lower the cutting units and mount the tipper bracket to the frame with the hardware supplied with the kit.

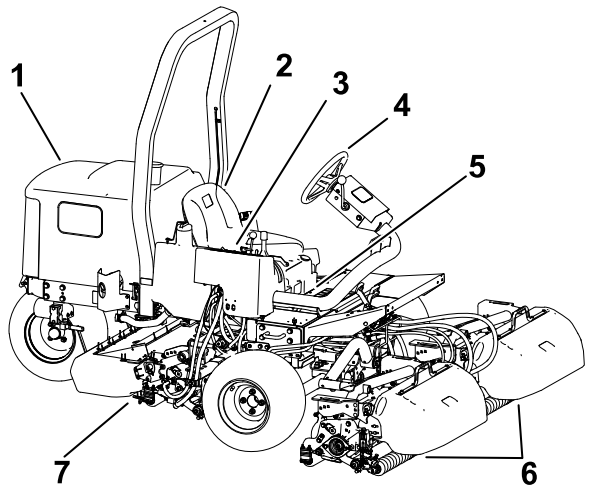

G403727

1. Engine hood
2. Operator's seat
3. Control arm
4. Steering wheel
5. Seat-adjustment lever
6. Front cutting units
7. Rear cutting unit

Controls

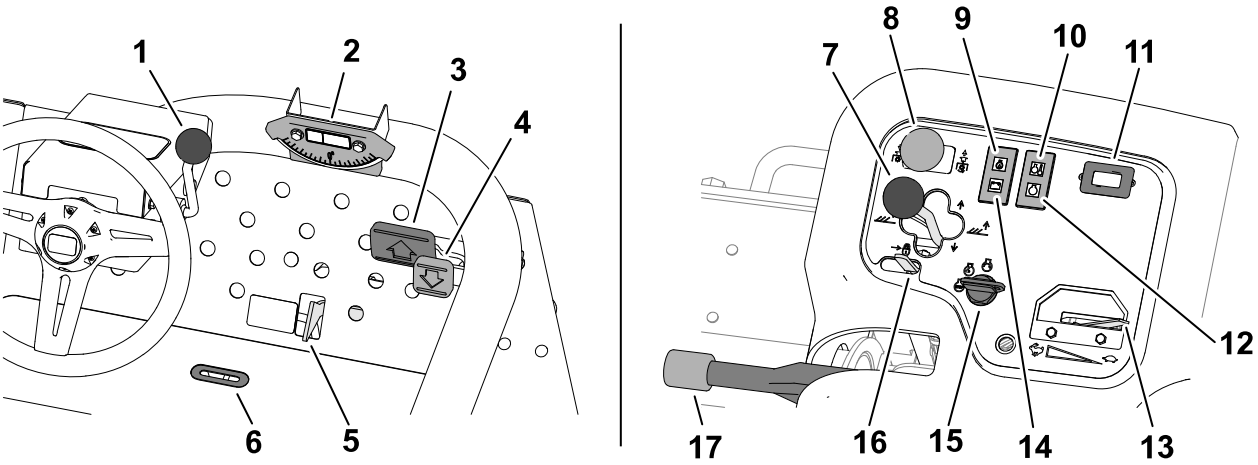

G450123

1. Tilt-steering lever
2. Slope indicator
3. Forward traction pedal
4. Reverse traction pedal
5. Mow/transport slide
6. Indicator slot
7. Cutting-unit shift lever
8. Cutting-unit drive switch
9. Oil-pressure light
10. Engine coolant temperature light
11. Hour meter
12. Glow-plug indicator light
13. Throttle
14. Alternator light
15. Key switch
16. Lift lever lock
17. Parking brake

Key Switch

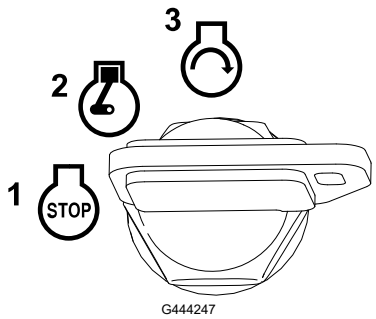

G444247

1 Off

2 Run/preheat the engine

Note: When the key is in the RUN/PREHEAT position, the glow plug energizes and the indicator light illuminates for approximately 7 seconds.

3 Start

Traction Pedals

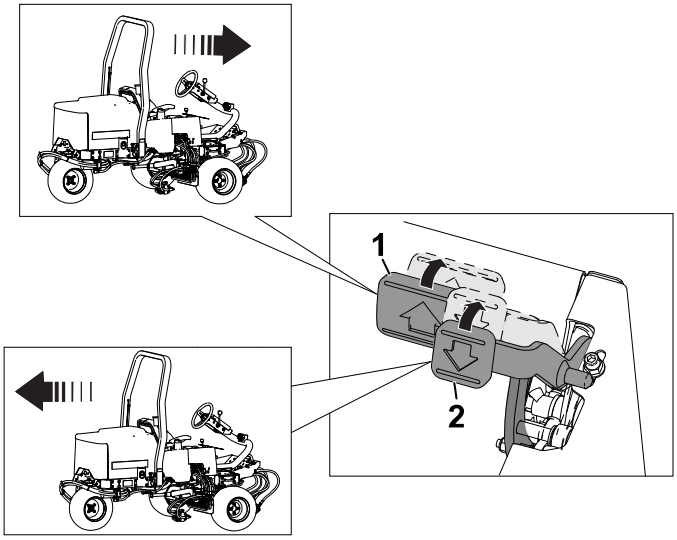

G450112

1 Move forward—press the forward traction pedal.

2 Move backward (or to assist in stopping when moving forward)—press the reverse traction pedal.

Allow the pedals to move or move them to the Neutral position to stop the machine.

Mow/Transport Slide

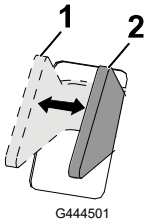

G444501

1 TRANSPORT—move the slide to this position when transporting the machine.

Note: The cutting units do not lower when the slide is in the TRANSPORT position.

2 MOW—move the slide to this position to operate the cutting units.

Cutting Unit Shift Lever

Raise/Lower

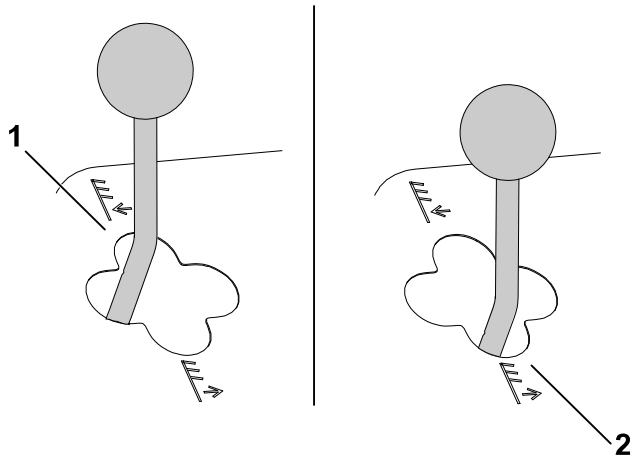

1 Lower

Note: The cutting units do not lower unless the engine is running. You do not need to hold the lever in the forward position while the cutting units are lowered.

2 Raise

Note: The reels do not run while the cutting units are raised.

Side Shift

Model 03171

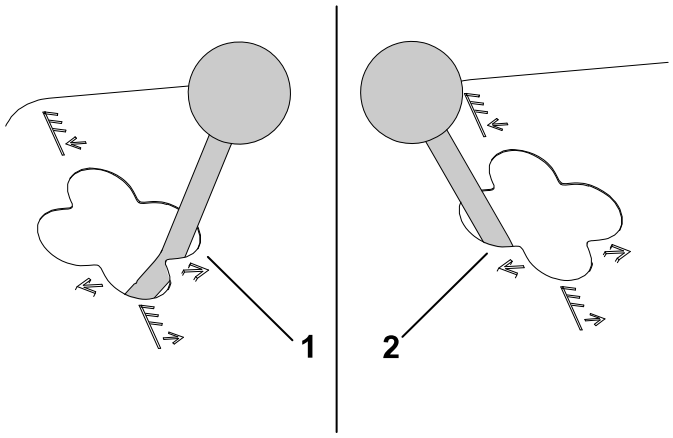

1 Shift right

2 Shift left

Note: Sideshift the cutting units only when they are raised or if they are on the ground and the machine is moving.

DANGER

Shifting the cutting units downhill decreases machine stability. This could cause a rollover, which may result in personal injury or death.

Shift the cutting units uphill while on a side hill.

Slope Indicator

The slope indicator indicates the side hill angle of the machine in degrees.

Indicator Slot

The slot in the operator platform indicates when the cutting units are in the center position.

Cutting-Unit Drive Switch

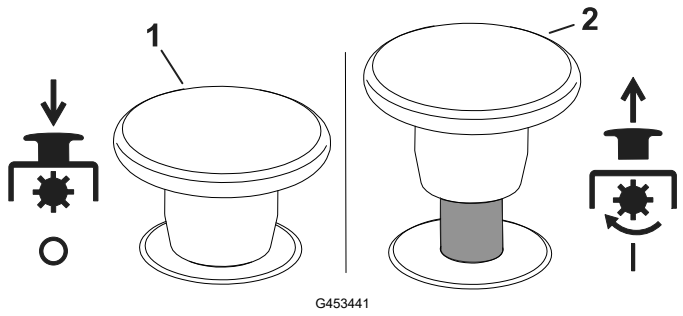

1 Disengage

2 Engage

Throttle

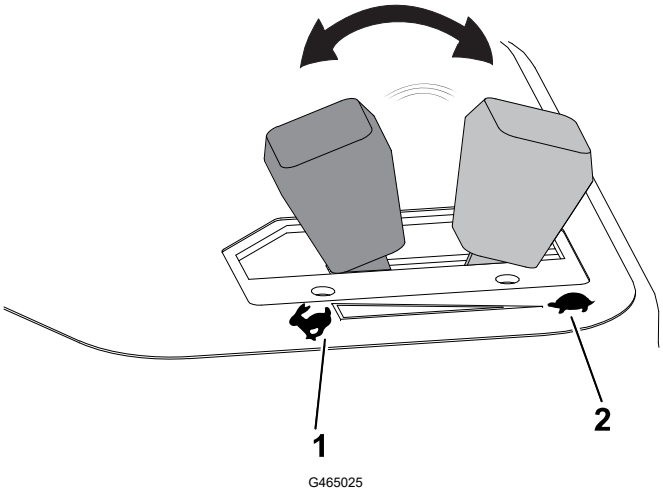

1 Increase engine speed

2 Decrease engine speed

Lift Lever Lock

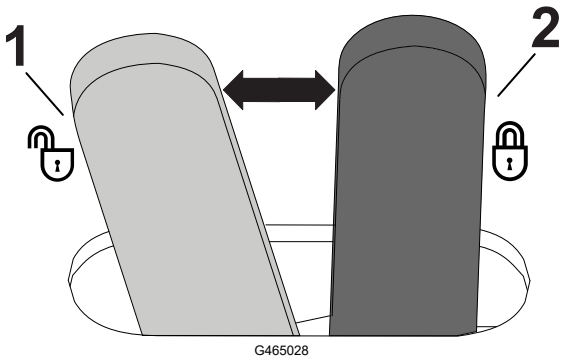

1 Unlock

2 Lock (prevents cutting units from dropping)

Parking Brake

Whenever the engine is shut off, engage the parking brake to prevent accidental movement of the machine.

Parking Brake (continued)

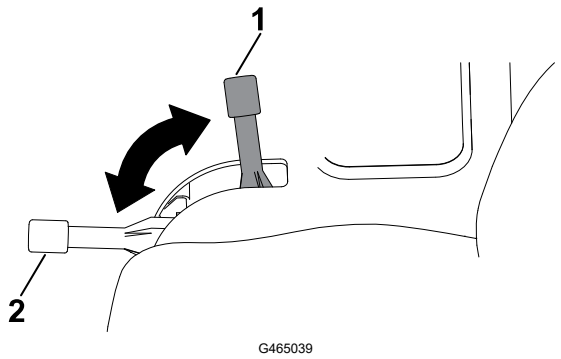

1 Engaged

2 Disengaged

Note: The engine shuts off if you press the traction pedal with the parking brake engaged.

Oil Pressure Warning Light

The oil pressure warning light glows if the engine oil pressure drops below a safe level.

Engine Coolant Temperature Warning Light

The temperature warning light illuminates if the engine coolant temperature is high. At this temperature, the cutting units shut off. If the coolant temperature rises another 5.5°C (10°F), the engine shuts off to prevent further damage.

Alternator Light

The alternator light shuts off when the engine runs. If the alternator light illuminates while the engine runs, check the charging system and repair it as necessary.

Glow-Plug Indicator Light

The glow-plug indicator light illuminates when the glow plugs are energized.

Hour Meter

The hour meter indicates the total hours of machine operation. The hour meter starts to function whenever the key switch is on.

Mower Manifold

The mower manifold is located under the control-console cover.

Mower Manifold (continued)

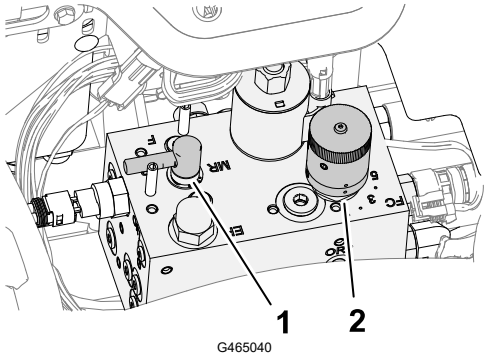

1 Backlap control

2 Reel speed control

Reel Speed Knob

Use the reel speed knob of the mower manifold to adjust the clip rate (reel speed) of the cutting units.

Turn the reel speed knob counterclockwise to increase the reel speed; turn the knob clockwise to slow the reel speed.

Refer to Clip Rate (Reel Speed), page 5–8 and Adjusting the Reel Speed, page 5–9 for information on how to adjust the reel speed control.

Backlap Control

The backlap lever controls the direction the cutting units rotate when you are mowing or when you backlap the reels and bedknives.

Rotate the backlap lever to the F position when mowing; rotate the lever to the R position when backlapping the cutting units.

Note: Do not change the backlap lever position while the reels are rotating.

Fuel Gauge

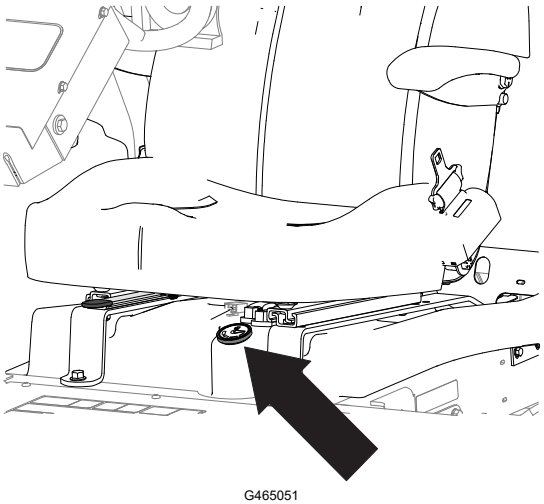

Tilt-Steering Lever

Unlock the tilt-steering lever, tilt the steering wheel to the desired position, and lock the lever to secure the position.

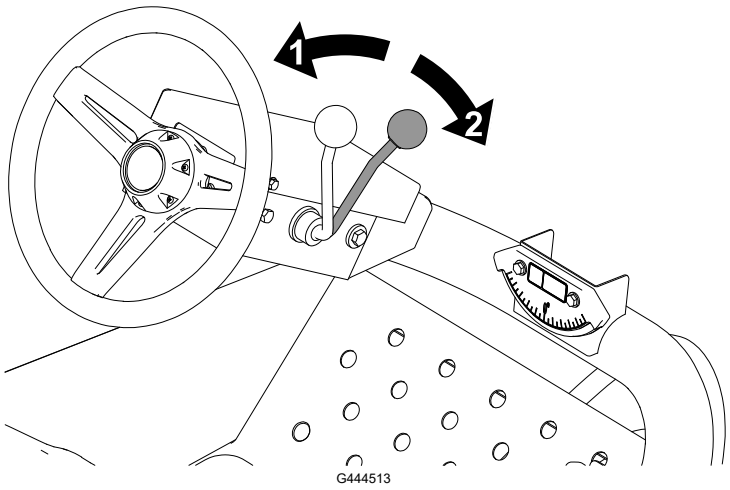

1 Unlock

2 Lock

Seat Adjustment Lever

Move the lever to the unlock position, adjust the seat to the desired position, and lock the lever to secure the seat position.

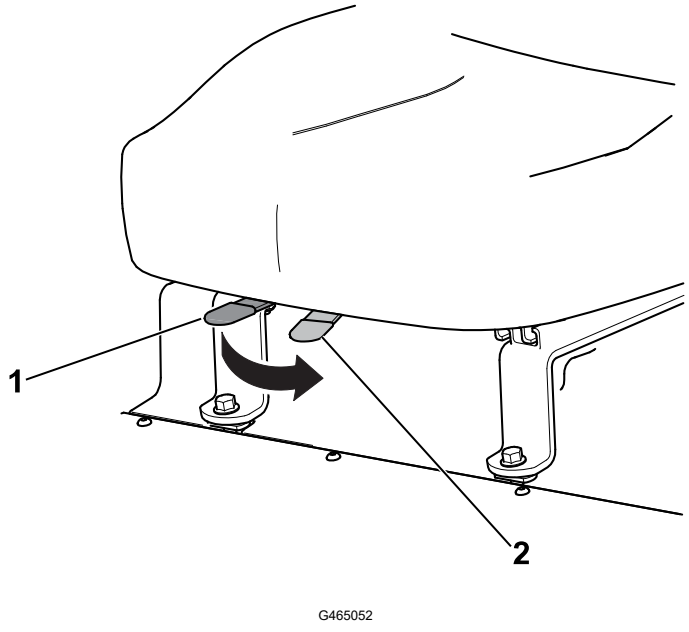

1 Lock

2 Unlock

Specifications

Note: Specifications and design are subject to change without notice.

Transport width	203 cm (80 inches) in 183 cm (72 inches) width of cut; 234 cm (92 inches) in 216 cm (85 inches) width of cut
Width of cut	183 cm (72 inches) or 216 cm (85 inches)
Length	248 cm (93 inches)
Height	193 cm (76 inches) with ROPS
Net weight*	844 kg (1,860 lb)
Fuel tank capacity	28 L (7.5 US gallons)
Transport speed	0 to 14 km/h (0 to 9 mph)
Mowing speed	0 to 10 km/h (0 to 6 mph)
Reverse speed	0 to 6 km/h (0 to 4 mph)

*With cutting units and fluids

Attachments/Accessories

A selection of Toro approved attachments and accessories is available for use with the machine to enhance and expand its capabilities. Contact your Authorized Service Dealer or authorized Toro distributor or go to www.Toro.com for a list of all approved attachments and accessories.

To ensure optimum performance and continued safety certification of the machine, use only genuine Toro replacement parts and accessories.

Before Operation

Performing Daily Maintenance

Before starting the machine each day, perform the Each Use/Daily procedures listed in the Maintenance Schedule.

Fuel

Fuel Specifications

IMPORTANT

Never use kerosene or gasoline instead of diesel fuel.

Petroleum Diesel

Type	Use summer grade diesel fuel (No. 2-D) at temperatures above -7°C (20°F) and winter grade (No. 1-D or No. 1-D/2-D blend) below that temperature. Use of winter grade fuel at lower temperatures provides lower flash point and cold flow characteristics which eases starting and reduces fuel filter plugging. Use of summer grade fuel above -7°C (20°F) contributes toward longer fuel pump life and increased power compared to winter grade fuel.
Sulfur content	Low (<500 ppm) or ultra low (<15 ppm)
Minimum Cetane Rating	40
Storage	Acquire only enough clean, fresh diesel fuel or biodiesel fuel that you will consume within 180 days. Do not use fuel that has been stored for more than 180 days.
Oil and additives	Do not add to the fuel

Fuel (continued)

Biodiesel

Type	This machine can also use a biodiesel-blended fuel of up to B20 (20% biodiesel, 80% petroleum diesel). The petroleum diesel portion should be low or ultra low sulfur. Use B5 (biodisel content of 5%) or lesser blends in cold weather
Minimum Cetane Rating	40
Biodiesel Precautions	Painted surfaces may be damaged by biodiesel blends. Monitor seals, hoses, gaskets in contact with fuel as they may degrade over time. Fuel filter plugging may be expected for a time after converting to biodiesel blended. For more information on biodiesel, contact your authorized Toro distributor.
Storage	Acquire only enough clean, fresh diesel fuel or biodiesel fuel that you will consume within 180 days. Do not use fuel that has been stored for more than 180 days.
Oil and additives	Do not add to the fuel

	Standard	**Location**
Biodiesel fuel must meet:	ASTM D6751	USA
	EN 14214	European Union
Blended fuel must meet:	ASTM D975	USA
	EN 590	European Union

Adding Fuel

1. Park the machine on a level surface, lower the cutting units, engage the parking brake, shut off the engine, and remove the key.
2. Clean the area around the fuel-tank cap (1).
3. Remove the fuel-tank cap.
4. Fill the tank with fuel up to the filler neck.
5. Install the cap and wipe up any spilled fuel.

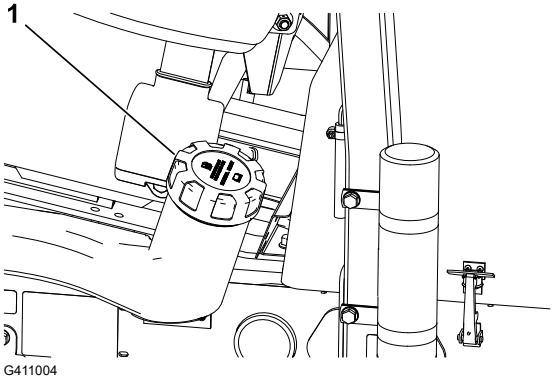

Checking the Interlock Switches

CAUTION

If safety interlock switches are disconnected or damaged, the machine could operate unexpectedly, resulting in minor or moderate injury.

- **Do not tamper with the interlock switches.**
- **Check the operation of the interlock switches daily and replace any damaged switches before operating the machine.**

IMPORTANT

If your machine fails any of the interlock switch checks, contact your authorized Toro distributor.

Preparing the Machine

1. Drive the machine slowly to an open area.
2. Lower the cutting units, shut off the engine, and engage the parking brake.

Checking the Traction Pedal Start-Interlock

1. Sit in the operator's seat and engage the parking brake.
2. Disengage the cutting-unit-drive switch.
3. Press the traction pedal and rotate the key to the START position.

Note: The starter should not crank the engine with the traction pedal pressed.

Checking the Cutting Unit Drive Switch Start-Interlock

1. Sit in the operator's seat and engage the parking brake.
2. Engage the cutting-unit-drive switch.
3. Ensure your foot is off the traction pedal and rotate the key to the START position.

Note: The starter should not crank the engine with the cutting-unit-drive switch in the ENGAGE position.

Checking the Parking Brake and Seat Run-Interlock

1. Sit in the operator's seat and engage the parking brake.
2. Disengage the cutting-unit-drive switch.
3. Ensure your foot is off the traction pedal and start the engine.
4. Disengage the parking brake.

Checking the Interlock Switches (continued)

5. Rise off the operator's seat.

Note: The engine should shut off if you are out of the operator's seat and the parking brake is disengaged.

Checking the Parking Brake and Traction Pedal Run-Interlock

1. Sit in the operator's seat and engage the parking brake.
2. Disengage the cutting-unit-drive switch.
3. Keep your foot off the traction pedal and start the engine.
4. Press the traction pedal.

Note: The engine should shut off if the parking brake is engaged and the traction pedal is pressed.

Checking the Seat and Traction Pedal Run-Interlock

1. Sit in the operator's seat and engage the parking brake.
2. Disengage the cutting-unit-drive switch.
3. Keep your foot off the traction pedal and start the engine.
4. Disengage the parking brake.
5. Rise off the operator's seat.
6. Press the traction pedal.

Note: The engine should shut off if you are out of the operator's seat and press the traction pedal.

During Operation

Starting the Engine

IMPORTANT

You must bleed the fuel system before starting the engine if you are starting the engine for the first time, the engine has shut off due to lack of fuel, or you have performed maintenance on the fuel system; refer to Bleeding the Fuel System, page 5–9.

1. Ensure that the parking brake is engaged, and the cutting-unit-drive switch is in the DISENGAGE position.
2. Remove your foot from the traction pedal and ensure that the pedal is in the neutral position.

Starting the Engine (continued)

3. Move the throttle lever to the 1/2 throttle position.
4. Insert the key into the switch and rotate it to the ON/PREHEAT position until the glow plug indicator light shuts off (approximately 7 seconds); then rotate the key to the START position to engage the starter motor. Release the key when the engine starts.

   Note: The key moves automatically to the ON/RUN position.

IMPORTANT

To prevent overheating of the starter motor, do not engage the starter longer than 15 seconds. After 10 seconds of continuous cranking, wait 60 seconds before engaging the starter motor again.

5. When the engine is started for the first time or after an overhaul of the engine, operate the machine in forward and reverse for 1 to 2 minutes. Also operate the lift lever and cutting-unit-drive switch to ensure proper operation of all parts.

   Note: Turn the steering wheel to the left and right to check the steering response, then shut the engine off and check for oil leaks, loose parts, and any other wear or damage.

CAUTION

Checking for oil leaks, loose parts, and other malfunctions could result in minor or moderate injury.

Shut off the engine and wait for all moving parts to stop before checking for oil leaks, loose parts, and other malfunctions.

Shutting Off the Engine

1. Move the throttle control to the IDLE position.
2. Engage the parking brake.
3. Move the cutting-unit-drive switch to the DISENGAGE position.
4. Lower the cutting units.
5. Shut off the engine, remove the key, and wait for all moving parts to stop.

Cutting Grass with the Machine

1. Drive the machine to the mowing area and align the machine outside the cutting area for the first cutting pass.
2. Press the cutting-unit-drive switch to the DISENGAGE position.
3. Move the throttle to the FAST position.
4. Lower the cutting units completely using the cutting-unit-shift lever.
5. Press the cutting-unit-drive switch to the ENGAGE position.

Cutting Grass with the Machine (continued)

6. Raise the cutting units off the ground using the cutting-unit-shift lever.
7. Once you reach the edge of the mowing area to start mowing, lower the cutting units using the cutting-unit-shift lever.

   Note: Practice to ensure the cutting units do not lower early or mow an unintended area.
8. Complete the mowing pass.
9. When nearing the opposite edge of the fairway (prior to reaching the edge of the mowing area), pull back the cutting-unit shift lever only long enough to raise the cutting units, and release the lever.

IMPORTANT

Do not hold the cutting-unit shift lever back while turning.

10. Perform a tear-shaped turn to quickly line up for your next pass.

Side-Shifting the Cutting Units

Model 03171

1. Use the cutting-unit-shift lever to raise the cutting units.
2. Move the cutting-unit-shift lever (1) left or right to move the cutting units left or right.
3. Use the cutting-unit-shift lever to lower the cutting units to the ground.

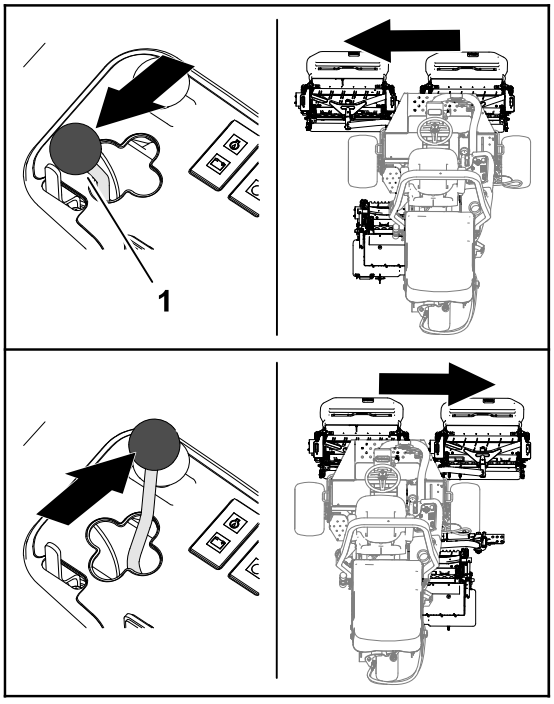

G402857

Driving the Machine in Transport Mode

1. Move the cutting-unit-drive switch to the DISENGAGE position.
2. Raise the cutting units to the transport position.
3. Move the mow/transport slide ② left to the TRANSPORT ① position.

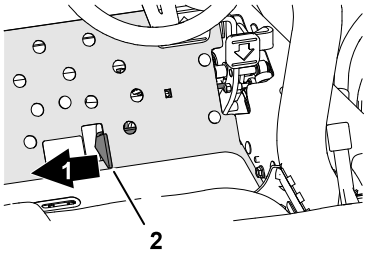

G402852

IMPORTANT

Be careful when driving between objects so that you do not accidentally damage the machine or the cutting units. Use extra care when operating the machine on slopes. Drive slowly and avoid sharp turns on slopes to prevent rollovers.

Note: You cannot lower the cutting units while operating the machine the transport mode.

Clip Rate (Reel Speed)

To achieve a consistent, high quality-of-cut and a uniform after-cut appearance, it is important that the reel speed be matched to the height-of-cut.

IMPORTANT

If the reel speed is too slow, you may notice visible clip marks. If the reel speed is too fast, the cut may have a fuzzy appearance.

Reel Speed Selection Chart

Height-of-Cut		8-Blade Reel				11-Blade Reel			
		5 km/h (3 mph)	6 km/h (4 mph)	8 km/h (5 mph)	9.6 km/h (6 mph)	5 km/h (3 mph)	6 km/h (4 mph)	8 km/h (5 mph)	9.6 km/h (6 mph)
63.5 mm	2-1/2 inches	3	3	4	4	–	–	–	–
60.3 mm	2-3/8 inches	3	3	4	4	–	–	–	–
57.2 mm	2-1/4 inches	3	3	4	4	–	–	–	–
54.0 mm	2-1/8 inches	3	3	4	4	–	–	–	–
50.8 mm	2 inches	3	3	4	4	–	–	–	–
47.6 mm	1-7/8 inches	3	3	4	5	–	–	–	–
44.5 mm	1-3/4 inches	3	3	4	5	–	–	–	–
41.3 mm	1-5/8 inches	3	3	4	5	–	–	–	–
38.1 mm	1-1/2 inches	3	4	4	5	–	–	–	–
34.9 mm	1-3/8 inches	3	4	4	5	–	–	–	–
31.8 mm	1-1/4 inches	3	4	5	6	–	–	–	–
28.8 mm	1-1/8 inches	3	4	5	6	–	–	–	–
25.4 mm	1 inch	3	4	5	7	–	–	–	–
22.2 mm	7/8 inch	4	5	6	8	3	4	4	5
19.1 mm	3/4 inch	4	5	7	9	3	4	5	6
15.9 mm	5/8 inch	5	7	9	9	4	5	6	7
12.7 mm	1/2 inch	6	9	–	–	4	6	8	9
9.5 mm	3/8 inch	8	–	–	–	6	8	9	–
6.4 mm	1/4 inch	–	–	–	–	9	–	–	–

Note: The higher the number, the higher the speed.

Adjusting the Reel Speed

1. Verify the height-of-cut setting on the cutting units. Use the column of the Reel Speed Selection Chart listing either 8-blade or 11-blade reels, and find the height-of-cut listing nearest the actual height-of-cut setting. Look across the chart to find the reel-speed number that corresponds to that height-of-cut.
2. Lift the cover (1) from the control arm.

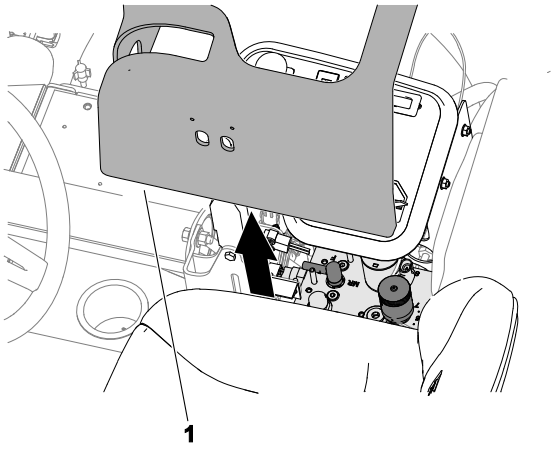

G411273

3. Turn the reel-speed-control knob (1) to the reel-speed number determined in Step 1.
4. Install the cover on the control arm.
5. Operate the machine for several days, then examine the cut to ensure the quality-of-cut. The reel speed knob may be set 1 position on either side of the reel-speed number indicated on the chart to account for differences in grass condition, grass length removed, and personal preference.

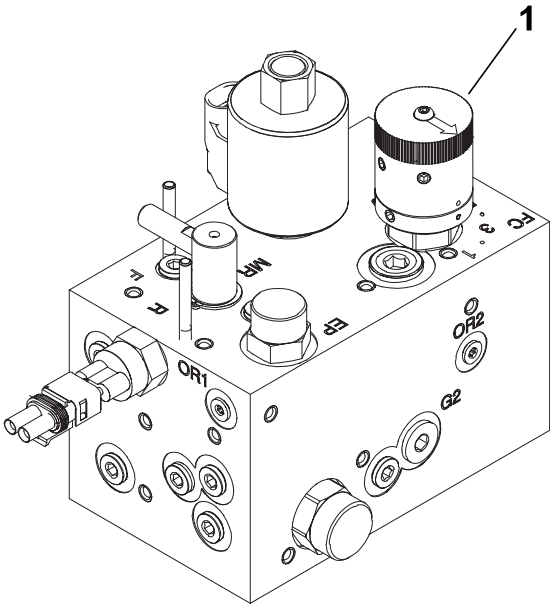

G411274

Bleeding the Fuel System

1. Park the machine on a level surface, lower the cutting units, engage the parking brake, shut off the engine, and remove the key.
2. Ensure that the fuel tank is at least half full.
3. Unlatch and raise the hood.
4. Open the air-bleed screw (1) on the fuel-injection pump.
5. Turn the ignition key to the On position.

   Note: The electric fuel pump runs, forcing air out around the air-bleed screw.

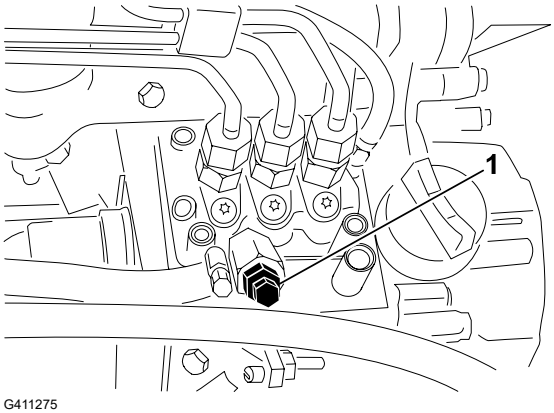

G411275

Bleeding the Fuel System (continued)

6. Tighten the screw and turn the ignition key to the OFF position.

Note: The engine should start after you follow this procedure. If the engine does not start, you may need to bleed air from the injectors.

Operating Tips

Mowing Techniques

- To begin cutting, engage the cutting units, then approach the mowing area slowly. Once the front cutting units are over the mowing area, lower the cutting units.
- To achieve the professional straight-line cut and striping that is desirable for some applications, find a tree or other object in the distance and drive straight toward it.
- As soon as the front cutting units reach the edge of the mowing area, lift the cutting units and perform a tear drop shaped turn to quickly line you up for your next pass.
- To mow around bunkers, ponds, or other contours easily, use the Sidewinder and move the control lever left or right, depending on your mowing application. You can also shift the cutting units to vary tire tracking.
- The cutting units tend to throw grass to the front or the rear of the machine. Front throw grass clippings when cutting smaller amounts of grass, which produces better after-cut appearance. To throw clippings to the front, simply close the rear shield on the cutting units.

⚠ CAUTION ⚠

Opening or closing the cutting unit shields while the engine is running could result in minor or moderate injury.

Shut off the engine and wait for all moving parts to stop before opening or closing the cutting unit shields.

- When cutting larger amounts of grass, position the shields to just below horizontal. **Do not open the shields too far or an excessive amount of clippings could build up on the frame, rear radiator screen, and engine area.**
- The cutting units are also equipped with balance weights on the non-motor end to give an even cut. You can add or remove weights if a mismatch occurs on your turf.

After Operation

After Mowing

Wash the machine and grease it.

Towing the Machine

In case of an emergency, you can tow the machine for a short distance; however, Toro does not recommend this as a standard procedure.

IMPORTANT

Do not tow the machine faster than 3 to 4 km/h (2 to 3 mph) because it may damage the drive system. If you must move the machine a considerable distance, transport it on a truck or trailer.

1. Open the hood.
2. Near the right hood latch, rotate the handle-bypass valve (1) on the pump 90° (1/4 turn).
3. Close and latch the hood.
4. Connect the tow vehicle to the machine at the tie-down points.
5. Sit in the operator's seat, and if needed, use the parking brake to control your machine while being towed.

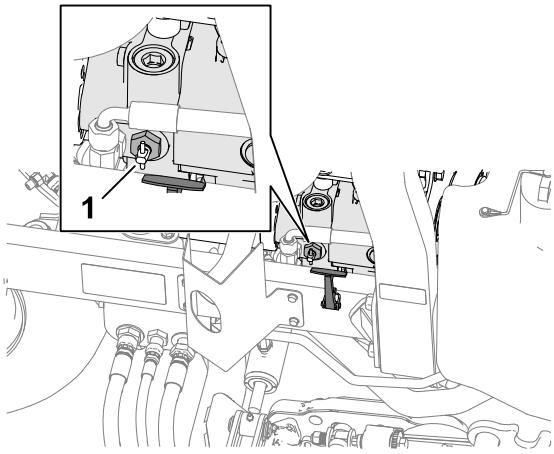

G413470

IMPORTANT

Do not start the engine while the bypass valve is open.

6. Before starting the engine, close the bypass valve by rotating it 90° (1/4 turn).

Tie-Down Point Locations

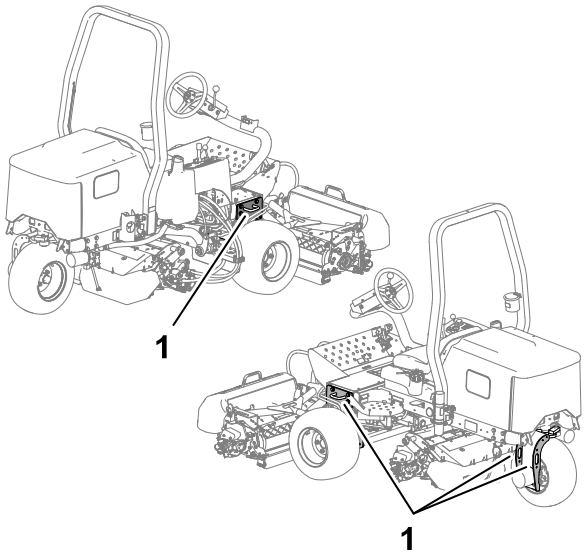

G413471

(1) Tie-down loops

Hauling the Machine

Follow the tips below when hauling the machine.

- Use full-width ramps for loading the machine onto a trailer or truck.
- Tie the machine down securely.

Note: Determine the left and right sides of the machine from the normal operating position.

Note: Download a free copy of the electrical or hydraulic schematic by visiting www.Toro.com and searching for your machine from the Manuals link on the home page.

IMPORTANT

Refer to your engine owner's manual and cutting unit *Operator's Manual* for additional maintenance procedures.

Recommended Maintenance Schedule

Maintenance Service Interval	Maintenance Procedure	Part No.	Qty	Description
After the first hour	Torque the wheel nuts to 61 to 88 N·m (45 to 65 ft-lb).	-	-	-
	Torque the left and right front-axle hub nuts to 339 to 373 N·m (250 to 275 ft-lb).	-	-	-
	Torque the rear-axle hub nuts to 339 to 373 N·m (250 to 275 ft-lb).	-	-	-
After the first 10 hours	Torque the wheel nuts to 61 to 88 N·m (45 to 65 ft-lb).	-	-	-
	Torque the left and right front-axle hub nuts to 339 to 373 N·m (250 to 275 ft-lb).	-	-	-
	Torque the rear-axle hub nuts to 339 to 373 N·m (250 to 275 ft-lb).	-	-	-
	Check the condition and tension of all belts.	130-1241	1	Alternator/fan belt
		95-8730	1	Hydrostat drive belt
After the first 50 hours	Change the engine oil and the engine-oil filter.	127-0511	1	Engine-oil filter
		121-6395	1	15W-40 Premium Engine Oil (5 gallons)
		121-6394	1	15W-40 Premium Engine Oil (55 gallons)

Maintenance Service Interval	Maintenance Procedure	Part No.	Qty	Description
Before each use or daily	Inspect the seat belt(s).	-	-	-
	Check the interlock switches.	-	-	-
	Check the engine-oil level.	121-6395	1	15W-40 Premium Engine Oil (5 gallons)
		121-6394	1	15W-40 Premium Engine Oil (55 gallons)
	Drain the water separator.	-	-	-
	Check the tire pressure.	-	-	-
	Check the engine-coolant level.	-	-	-
	Clean the engine cooling system.	-	-	-
	Check the hydraulic lines and hoses.	-	-	-
	Check the hydraulic-fluid level.	133-8086	1	PX Extended Life Hydraulic Fluid (5 gallons)
		133-8087	1	PX Extended Life Hydraulic Fluid (55 gallons)
	Check the reel-to-bedknife contact.	-	-	-
Every 25 hours	Check the electrolyte level (if machine is in storage, check every 30 days).	-	-	-
Every 50 hours	Lubricate all bearings and bushings (lubricate all bearings and bushings daily when conditions are dusty and dirty).	108-1190	1	Premium all-purpose grease (14 oz)
Every 100 hours	Check the condition and tension of all belts.	130-1241	1	Alternator/fan belt
		95-8730	1	Hydrostat drive belt
Every 150 hours	Change the engine oil and the engine-oil filter.	127-0511	1	Engine-oil filter
		121-6395	1	15W-40 Premium Engine Oil (5 gallons)
		121-6394	1	15W-40 Premium Engine Oil (55 gallons)
Every 200 hours	Service the air cleaner (more frequently in extreme dusty or dirty conditions).	108-3811	1	Air-cleaner filter
	Torque the wheel nuts to 61 to 88 N·m (45 to 65 ft-lb).	-	-	-

Maintenance Service Interval	Maintenance Procedure	Part No.	Qty	Description
	Torque the left and right front-axle hub nuts to 339 to 373 N·m (250 to 275 ft-lb).	-	-	-
	Torque the rear-axle hub nuts to 339 to 373 N·m (250 to 275 ft-lb).	-	-	-
	Check the adjustment of the parking brake.	-	-	-
Every 400 hours	Check the fuel lines and connections.	-	-	-
	Replace the fuel filter canister.	110-9049	1	Fuel filter canister
Every 500 hours	Grease the bearings in the rear axle.	108-1190	1	Premium all-purpose grease (14 oz)
Every 800 hours	Change the hydraulic fluid (if you are not using the recommended hydraulic fluid or have ever filled the reservoir with an alternative fluid).	133-8086	1	PX Extended Life Hydraulic Fluid (5 gallons)
		133-8087	1	PX Extended Life Hydraulic Fluid (55 gallons)
	Replace the hydraulic filter (if you are not using the recommended hydraulic fluid or have ever filled the reservoir with an alternative fluid).	86-3010	1	Hydraulic filter
Every 1,000 hours	Replace the hydraulic filter (if you are using the recommended hydraulic fluid).	86-3010	1	Hydraulic filter
Every 2,000 hours	Change the hydraulic fluid (if you are using the recommended hydraulic fluid).	133-8086	1	PX Extended Life Hydraulic Fluid (5 gallons)
		133-8087	1	PX Extended Life Hydraulic Fluid (55 gallons)
Every 2 years	Drain and clean the fuel tank.	-	-	-
	Flush and replace the cooling system fluid (take the machine to an Authorized Service Dealer or Distributor or refer to the *Service Manual*).	-	-	-

Daily Maintenance Checklist

Maintenance Check Item	For the week of:						
	Mon.	Tues.	Wed.	Thurs.	Fri.	Sat.	Sun.
Check the safety interlock operation.							
Check the brake operation.							
Check the levels of the engine oil and fuel.							
Check the cooling-system fluid level.							
Drain the water/fuel separator.							
Check the air-filter, dust cup, and burp valve.							
Check the radiator and screen for debris.							
Check for unusual engine noises.[1]							
Check for unusal operating noises.							
Check the fluid level of the hydraulic system.							
Check the hydraulic hoses for damage.							
Check for fluid leaks.							
Check the fuel level.							
Check the tire pressure.							
Check the instrument operation.							
Check the reel-to-bedknife contact adjustment.							
Check the height-of-cut adjustment.							
Lubricate all grease fittings.[2]							
Touch-up damaged paint.							
Wash the machine.							

1. Check the glow plug and injector nozzles if the engine starts hard, produces excess smoke, or runs rough.
2. Immediately after every washing, regardless of the interval listed

Notation for Areas of Concern

Inspection performed by:		
Item	**Date**	**Information**
1		
2		
3		
4		
5		

Pre-Maintenance Procedures

Preparing for Maintenance

1. Park the machine on a level surface, lower the cutting units, and engage the parking brake.
2. Shut off the engine, remove the key, wait for all moving parts to stop, and allow the engine to cool.

Lifting the Front of the Machine

1. Chock the tires.
2. Jack the front of the machine under the square tube (2) of the lower frame as closely to the side plate (1) as possible.
3. Support the machine with jack stands rated for the weight of the machine under the square tube or wheel motors.

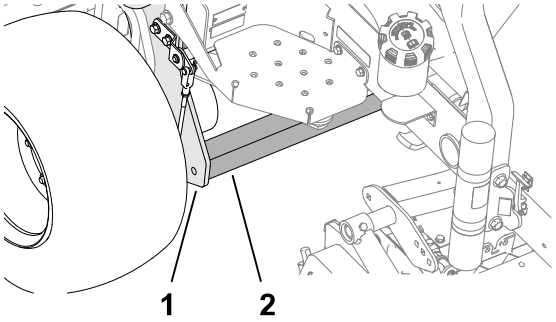

G414298

Lifting the Back of the Machine (Using a Hoist)

1. Chock the tires.
2. Secure the hoist to the tie-down loop (3) of the rear-wheel fork (2).
3. Carefully raise the machine.
4. Support the machine with jack stands rated for the weight of the machine under the frame (1).

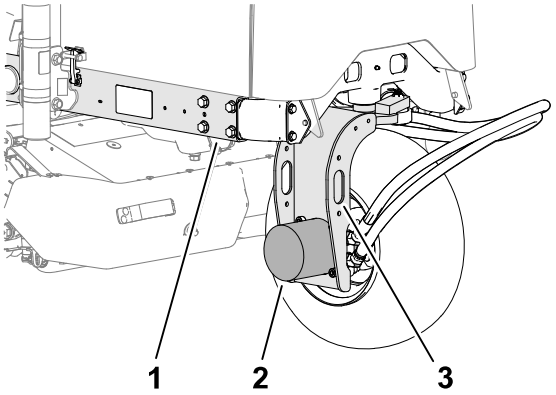

G414299

Lifting the Back of the Machine (Using a Jack)

1. Chock the tires.
2. Jack the back of the machine under the rear wheel motor (2).
3. Support the machine with jack stands rated for the weight of the machine under the frame (1).

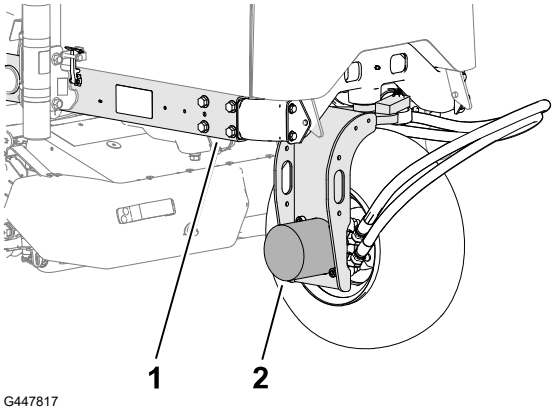

G447817

Removing the Battery Cover

Remove the battery cover as shown.

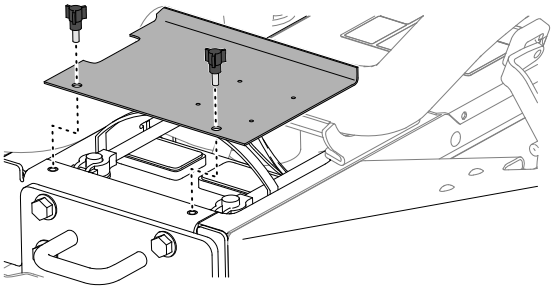
G448592

Opening the Hood

1. Release the latches (1) on both sides of the hood.

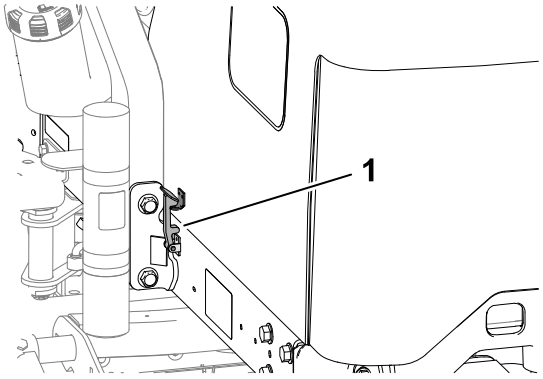

G414711

Opening the Hood (continued)

2. Rotate the hood open.

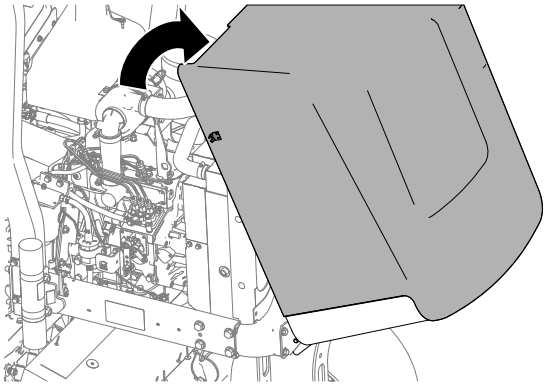

G414712

Lubrication

Greasing the Bearings and Bushings

The machine has grease fittings that must be lubricated regularly. Dusty and dirty operating conditions could cause dirt to get into the bearings and bushings, resulting in accelerated wear. Lubricate the grease fittings immediately after every washing, regardless of the interval specified.

1. Prepare the machine for maintenance.
2. Grease all machine fittings with No. 2 lithium grease.

Grease Fitting Locations

Grease Specification: No. 2 lithium grease

Rear cutting unit pivot	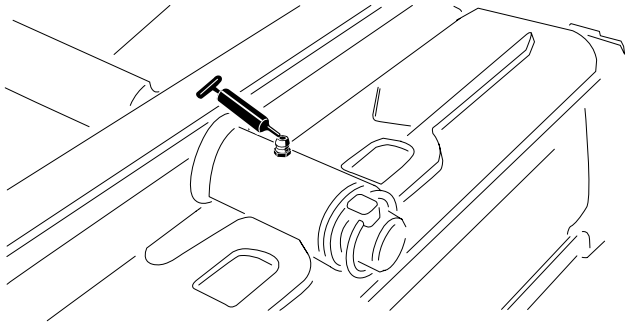 G450432
Front cutting unit pivot	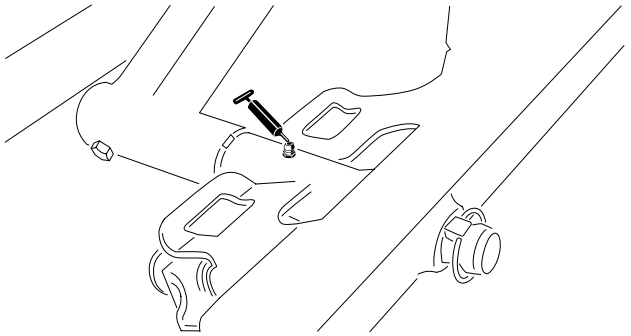 G450435
Sidewinder cylinder ends (2 fittings; Model 03171 only)	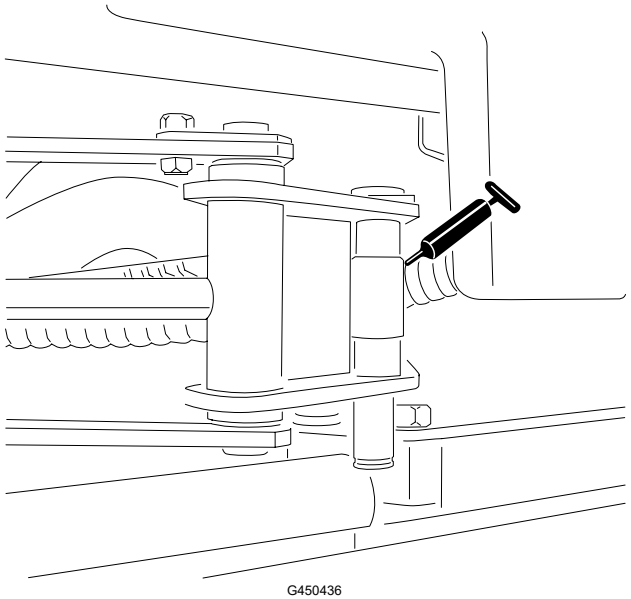 G450436

Greasing the Bearings and Bushings (continued)

Steering pivot	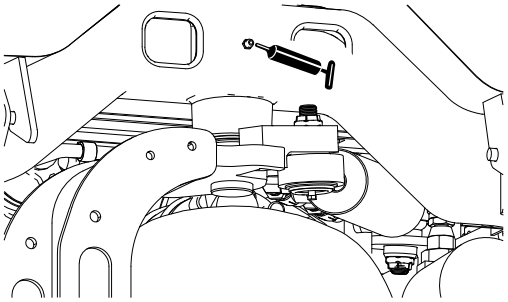 G450437
Rear lift arm pivot and lift cylinder (2 fittings)	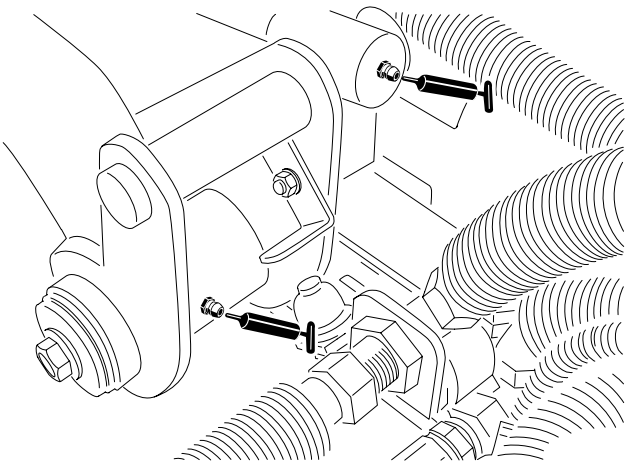 G450438
Left front lift arm pivot and lift cylinder (2 fittings)	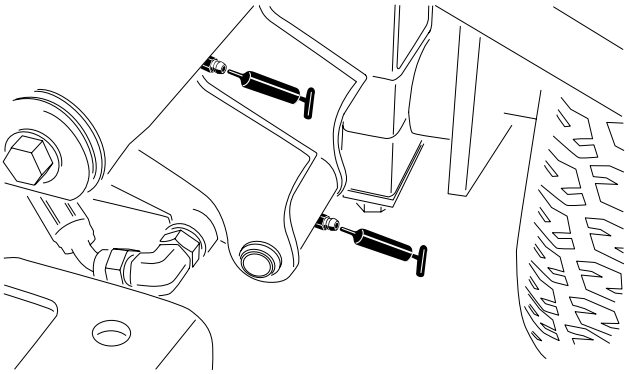 G450439
Right front lift arm pivot and lift cylinder (2 fittings)	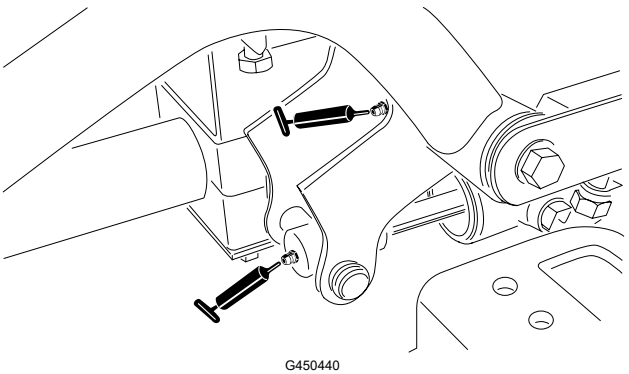 G450440

Greasing the Bearings and Bushings (continued)

Neutral adjust mechanism	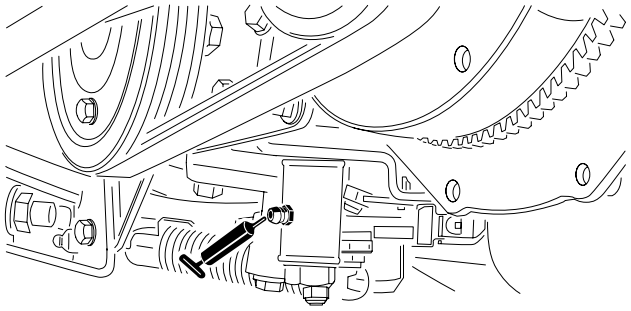 G450441
Mow/transport slide	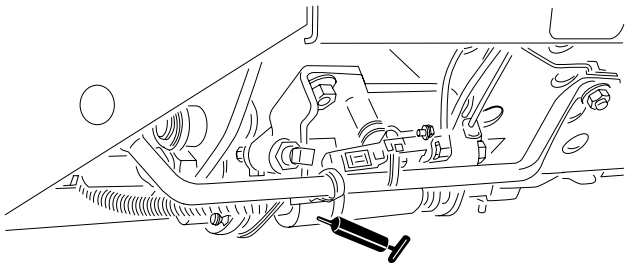 G450442
Belt tension pivot	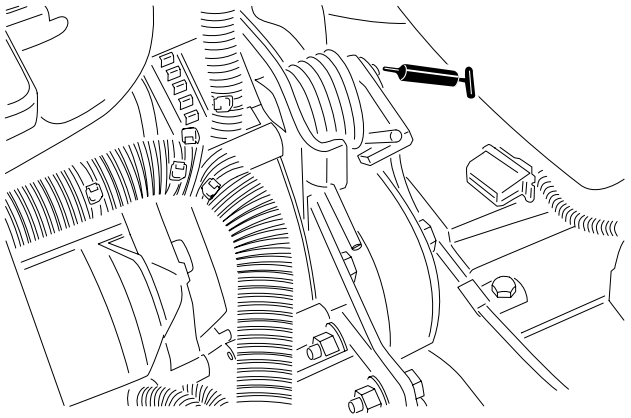 G450443

Greasing the Bearings and Bushings (continued)

Steering cylinder	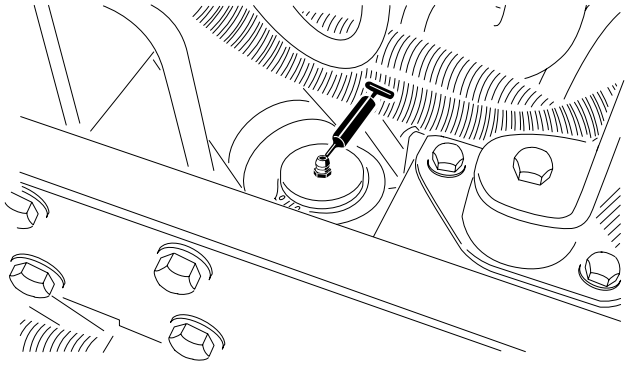 G450444
Note: If desired, install an additional grease fitting in the other end of the steering cylinder. Remove the tire, install the fitting, grease the fitting, remove the fitting, and install the plug.	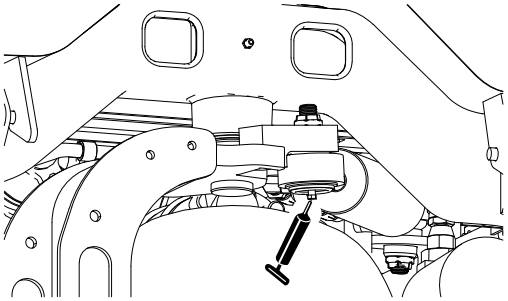 G450445

Checking the Sealed Bearings

Bearings rarely fail from defects in materials or workmanship. The most common reason for failure is moisture and contamination working its way past the protective seals. Bearings that are greased rely upon regular maintenance to purge harmful debris from the bearing area. **Sealed** bearings rely on an initial fill of special grease and a robust integral seal to keep contaminants and moisture out of the rolling elements.

The sealed bearings require no lubrication or short-term maintenance. This minimizes routine service required and reduces the potential of turf damage due to grease contamination. These sealed bearing packages will provide good performance and life under normal use, but you should periodically inspect the bearing condition and seal integrity to avoid downtime. Inspect the bearings seasonally and replace the them if they are damaged or worn. Bearings should operate smoothly with no detrimental characteristics such as high heat, noise, looseness, or indications of corrosion (rust).

Due to the operating conditions these bearing/seal packages are subject to (i.e., sand, turf chemicals, water, impacts, etc.) they are considered normal wear items. Bearings that fail due to causes other than defects in materials or workmanship are typically not covered under the warranty.

Note: Bearing life can be negatively affected by improper wash-down procedures. Do not wash down the machine when it is still hot and avoid directing high-pressure or high-volume spray at the bearings.

Engine Maintenance

Engine Oil Specifications

Oil Type

Use high-quality, low-ash engine oil that meets or exceeds API service category CH-4 or higher.

Use the following engine oil viscosity grade:

- Preferred oil: SAE 15W-40 [-17°C (above 0°F)]
- Alternate oil: SAE 10W-30 or 5W-30 (all temperatures)

Toro Premium Engine Oil is available from your authorized Toro distributor in either 15W-40 or 10W-30 viscosity grades.

Crankcase Capacity

Approximately 3.8 L (4.0 US qt) with the filter

Checking the Engine-Oil Level

Note: Check the oil when the engine is cool. If the engine is warm, wait 10 minutes before checking.

If the oil level is below the lower limit mark on the dipstick, add oil gradually until the level reaches the upper limit mark on the dipstick.

IMPORTANT

Keep the engine-oil level between the upper and lower limits on the dipstick. Overfilling or underfilling the engine oil may cause severe engine damage.

1. Prepare the machine for maintenance.
2. Open the hood.
3. Check the level of the engine oil.
4. Close and latch the hood.

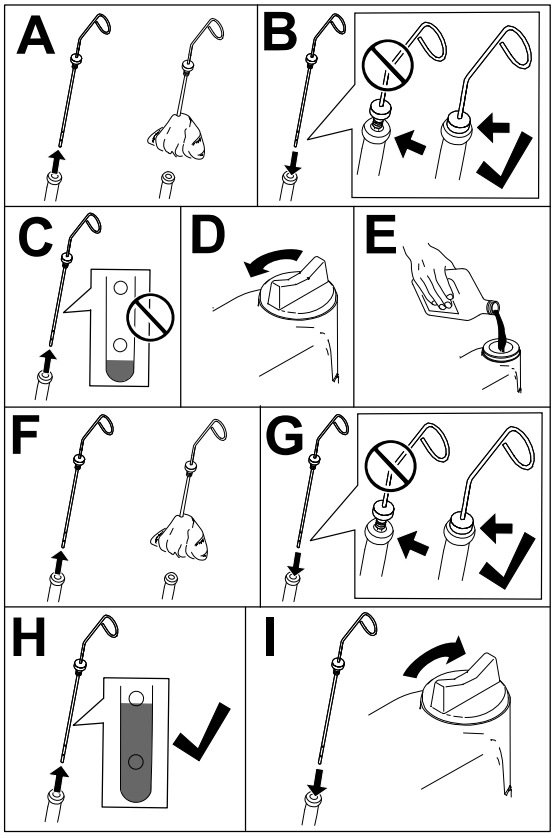

G453109

Changing the Engine Oil and Filter

1. Prepare the machine for maintenance.
2. Unlatch and open the hood.
3. Perform the following steps to change the engine oil:
   A. Remove either drain plug (1) and allow all of the existing oil to drain out of the engine.
   B. Install the drain plug.

Changing the Engine Oil and Filter (continued)

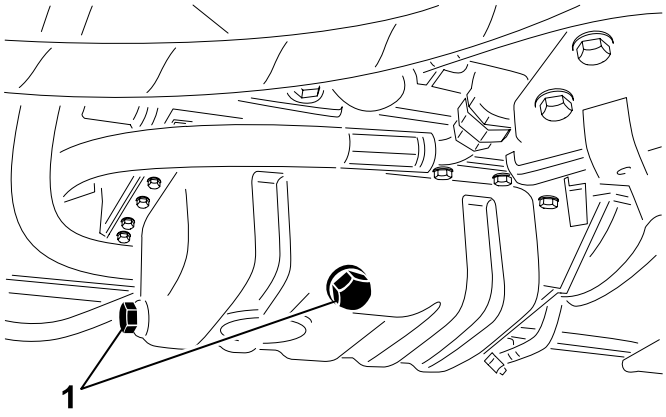

G414739

4. Change the engine-oil filter.

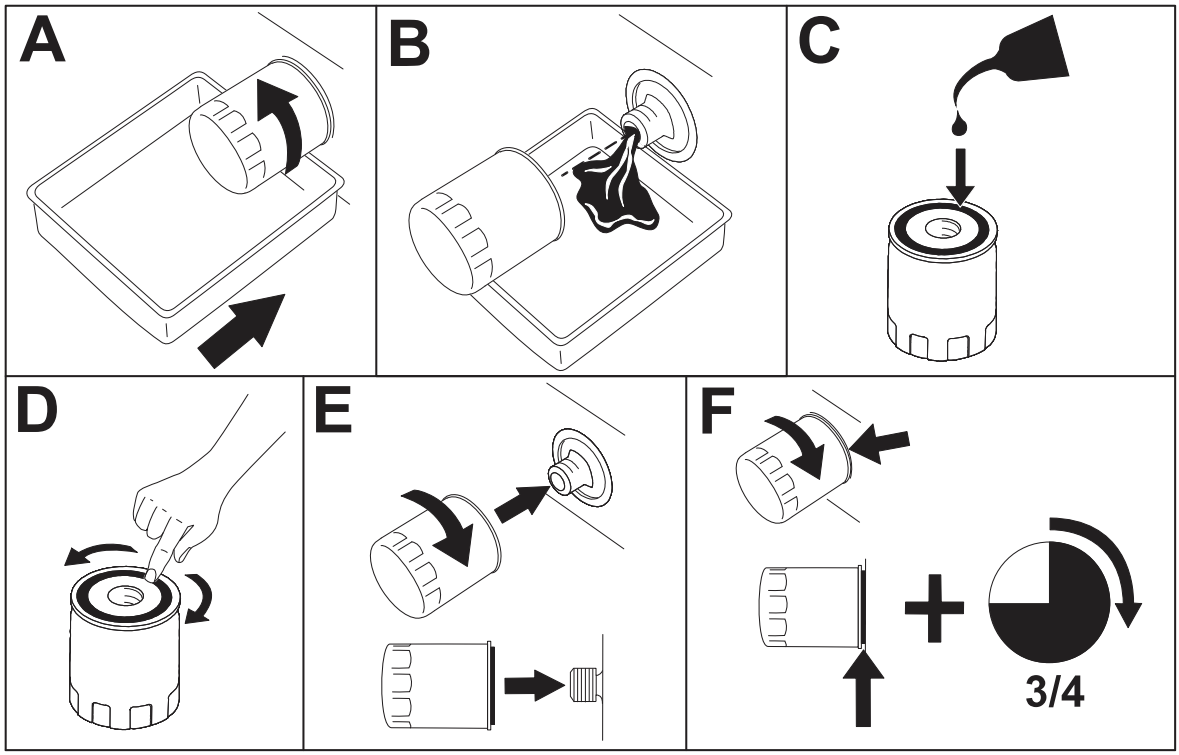

G414740

Note: Do not overtighten the filter.

5. Add oil to the crankcase.

Changing the Engine Oil and Filter (continued)

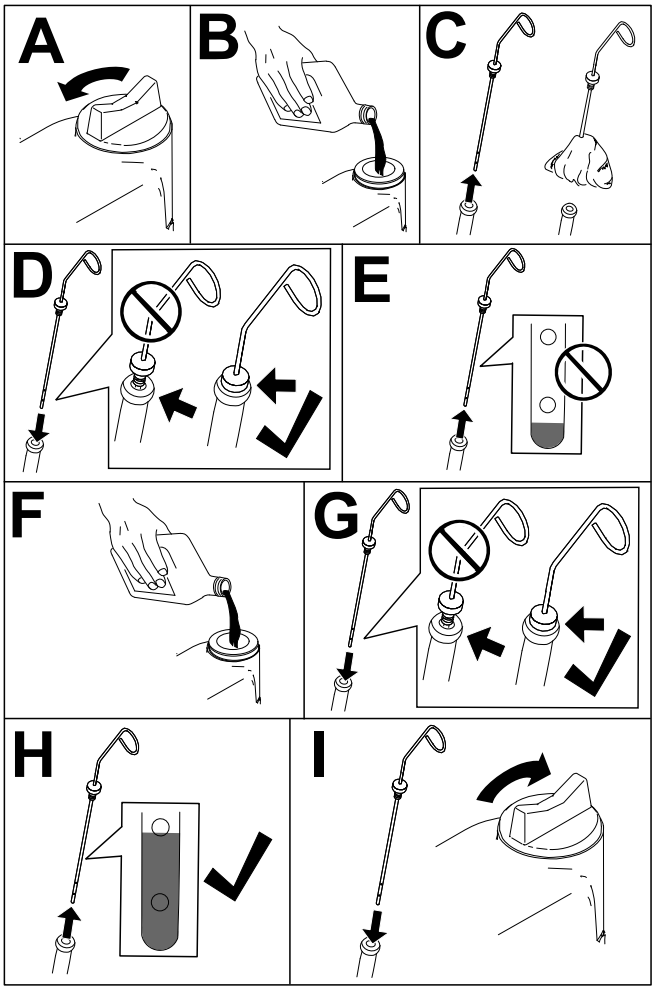

G453108

6. Close and latch the hood.

Servicing the Air Cleaner

- Check the whole intake system for leaks, damage, or loose hose clamps. Do not use a damaged air filter.
- Service the air-cleaner filter at the recommended service interval or earlier if engine performance declines due to extremely dusty, dirty conditions. Changing the air filter before it is necessary only increases the chance of dirt entering the engine when the filter is removed.

IMPORTANT

Ensure that the cover is seated correctly, seals with the air-cleaner body, and the rubber outlet valve is in a downward position—between the 5 o'clock and 7 o'clock positions when viewed from the end.

Servicing the Air Cleaner (continued)

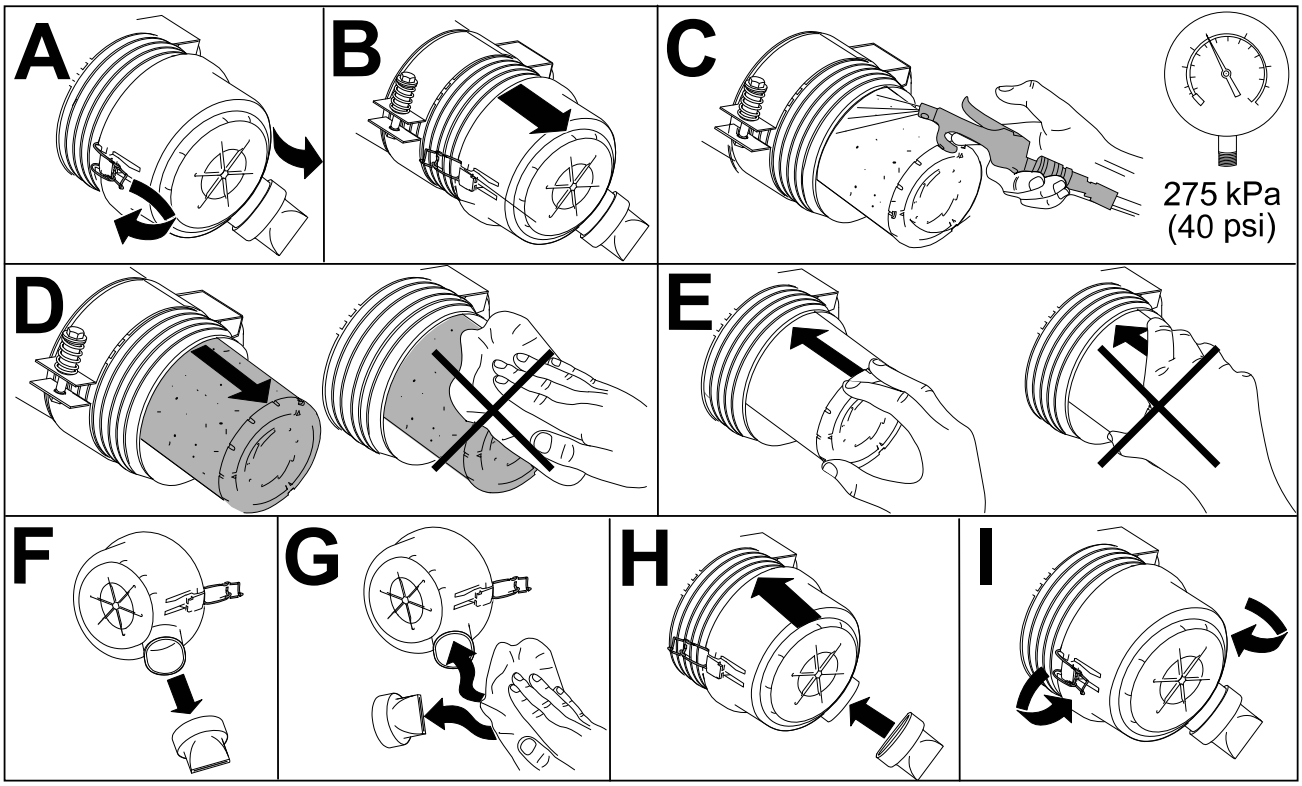

G448875

Fuel System Maintenance

This *Operator's Manual* contains more detailed fuel and fuel system maintenance information than the engine *Owner's Manual*, which is a general-purpose reference relating to fuel and fuel maintenance.

Ensure that you understand that the fuel system maintenance, fuel storage, and fuel quality require your attention to avoid downtime and extensive engine repairs.

The fuel system has extremely tight tolerances due to the emissions and control requirements. Diesel fuel quality and cleanliness is more important for the longevity of today's high-pressure common rail (HPCR) fuel-injection system used on diesel engines.

IMPORTANT

Water or air in the fuel system will damage your engine! Do not assume that new fuel is clean. Ensure that your fuel is from a quality supplier, store your fuel correctly, and use your fuel supply within 180 days.

IMPORTANT

If you do not follow the procedures for fuel filter replacement, fuel system maintenance, and fuel storage, the engine fuel system could fail prematurely. Perform all fuel system maintenance at the specified intervals or whenever the fuel is contaminated or its quality is poor.

Fuel Storage

Appropriate fuel storage is critical for your engine. Proper maintenance of fuel storage tanks is often overlooked and leads to the contamination of fuel delivered to the machine.

- Acquire only enough fuel that you will consume within 180 days. Do not use fuel that has been stored for more than 180 days. This helps eliminate water and other contaminates in the fuel.
- If you do not remove the water from the storage tank or machine fuel tank, it can lead to rust or contamination in the storage tank and fuel system components. Tank sludge developed by mold, bacteria, or fungus restricts flow and clogs the filter and fuel injectors.
- Inspect your fuel storage tank and machine fuel tank regularly to monitor the fuel quality in the tank.
- Ensure that your fuel comes from a quality supplier.
- If you find water or contaminants in your storage tank or machine fuel tank, work with your fuel provider to correct the problem and perform all fuel system maintenance.
- Do not store diesel fuel in tanks or canisters made with zinc-plated components.

Servicing the Fuel Tank

1. Prepare the machine for maintenance.
2. Drain and clean the tank if the fuel system becomes contaminated or if the machine will be stored for an extended period. Use clean fuel to flush out the tank.

Inspecting the Fuel Lines and Connections

1. Prepare the machine for maintenance.
2. Unlatch and open the hood.
3. Inspect the fuel lines and fittings for deterioration, damage, or loose connections.

   Note: Repair or replace any damaged or worn the fuel lines or fittings.
4. Close and latch the hood.

Servicing the Fuel/Water Separator

Draining the Fuel/Water Separator

1. Prepare the machine for maintenance.
2. Drain the water separator as shown.

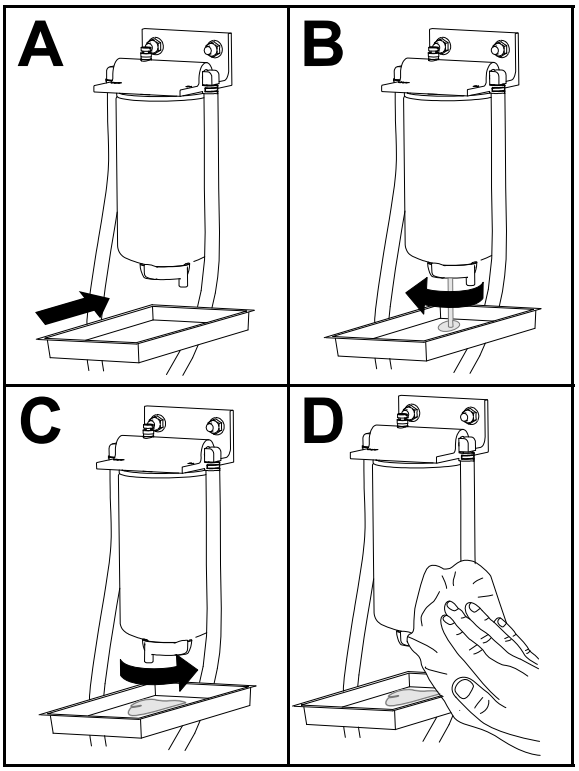

G452998

3. Start the engine, check for leaks, and shut off the engine.

   Note: Repair all fuel leaks.

Servicing the Fuel/Water Separator (continued)

Replacing the Fuel/Water Separator Filter

1. Replace the filter as shown.

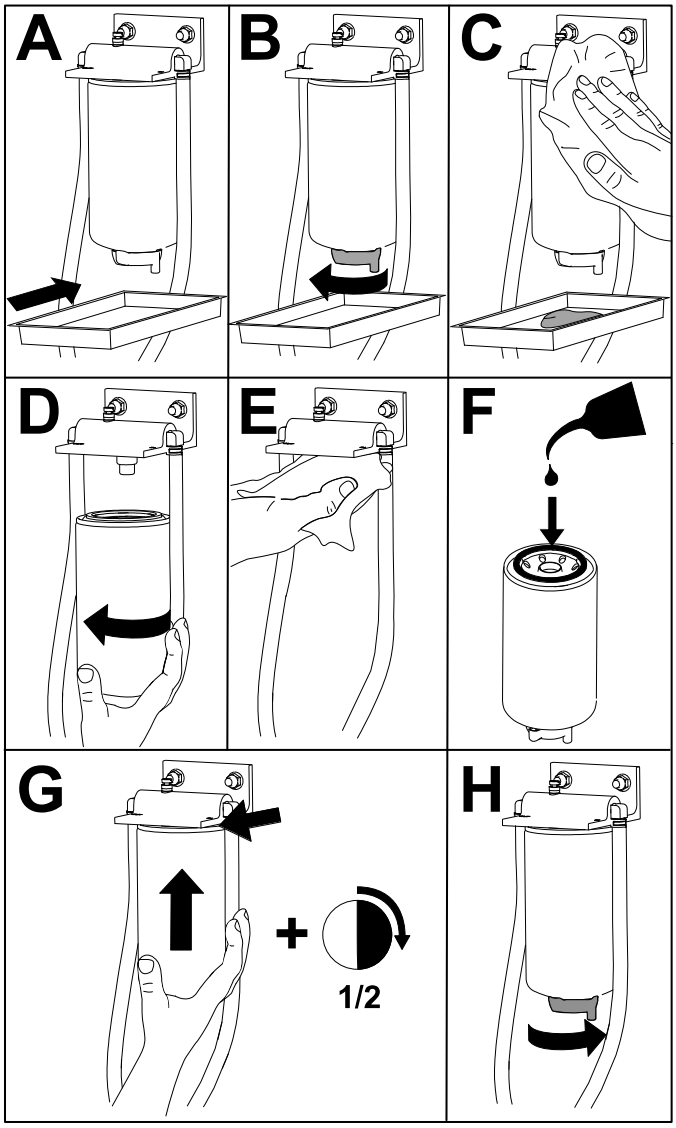

G452996

2. Start the engine, check for leaks, and shut off the engine.

   Note: Repair all fuel leaks.

Bleeding Air from the Injectors

Note: Use this procedure only if the fuel system has been purged of air through normal priming procedures and the engine does not start.

1. Prepare the machine for maintenance.
2. Unlatch and open the hood, and allow the engine to cool.
3. Loosen the tube nut for the fuel line to the No. 1 fuel-injector nozzle.

Bleeding Air from the Injectors (continued)

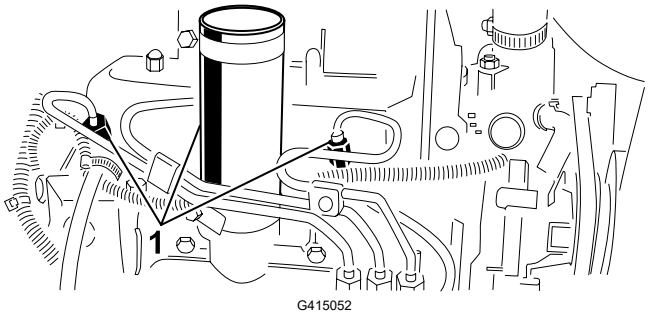

(1) Fuel injectors

4. Move the throttle to the FAST position.
5. Turn the key to the START position and watch the fuel flow around the connector. Turn the key to the OFF position when there is a continuous flow.

IMPORTANT

To prevent overheating of the starter motor, do not engage the starter for longer than 15 seconds. After 10 seconds of continuous cranking, wait 60 seconds before engaging the starter motor again.

6. Tighten the tube nut securely.
7. Clean any fuel from the engine.
8. Repeat steps 3 through 7 for the remaining fuel-injector nozzles.
9. Start the engine, check for leaks, and shut off the engine.

   Note: Repair all fuel leaks.
10. Close and latch the hood.

Electrical System Maintenance

Servicing the Battery

DANGER

Battery electrolyte contains sulfuric acid, which is lethal if consumed and causes severe burns.

- **Do not drink electrolyte and avoid contact with skin, eyes, or clothing.**
- **Wear safety glasses and rubber gloves.**
- **Fill the battery where clean water is always available for flushing the skin.**

Servicing the Battery (continued)

WARNING

Incorrectly routing the battery cable could damage the machine and cables, causing sparks. Sparks can cause the battery gasses to explode, which could result in death or serious injury.

- **Always disconnect the negative (black) battery cable before disconnecting the positive (red) cable.**
- **Always connect the positive (red) battery cable before connecting the negative (black) cable.**

1. Prepare the machine for maintenance.
2. Remove the battery cover.
3. Remove the filler caps of the battery.
4. Maintain the battery electrolyte level in the battery cells with distilled or demineralized water.

   Note: Do not fill the cells above the bottom of the split ring inside each cell.
5. Install the filler caps with the vents pointing to the rear (toward the fuel tank).
6. Clean the top of the battery by washing it periodically with a brush dipped in ammonia or bicarbonate of soda solution. Flush the top surface with water after cleaning.

IMPORTANT

Do not remove the filler caps while cleaning.

7. Check the battery cable clamps and battery posts for corrosion. If corrosion occurs, perform the following:
   A. Disconnect the negative (–) battery cable.
   B. Disconnect the positive (+) battery cable.
   C. Clean the clamps and posts separately.
   D. Connect the positive (+) battery cable.
   E. Connect the negative (–) battery cable.
   F. Coat the clamps and terminals with battery terminal protector.
8. Check that the battery cable clamps are tight on the battery posts.
9. Install the battery cover.

   Note: Store the machine where the temperature is cooler rather than warmer to prevent the battery from discharging more rapidly.

Servicing the Fuses

1. Prepare the machine for maintenance.
2. Lift the cover from the control arm.

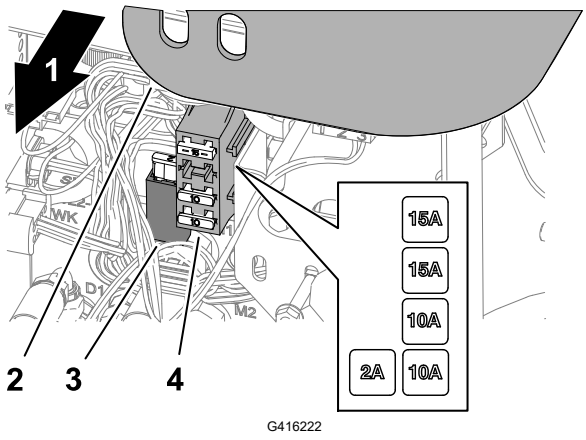

1. Right side of the machine
2. Control-arm cover
3. Fuse holder
4. Fuse block

3. Locate the open fuse in the fuse holder or fuse block.
4. Replace the fuse with the same type and amperage fuse.
5. Assemble the cover onto the control arm.

Drive System Maintenance

Checking the Tire Pressure

WARNING

Low tire pressure decreases machine side hill stability. This could cause a rollover, which could result in death or serious injury.

Do not under-inflate the tires.

Note: Maintain the recommended pressure in all tires to ensure a good quality of cut and proper machine performance.

1. Measure the air pressure in each tire. The correct air pressure in the tires is 97 to 110 kPa (14 to 16 psi).
2. If needed, add air to of remove air from the tires until you measure 97 to 110 kPa (14 to 16 psi).

Torquing the Wheel Lug Nuts



Torque the wheel lug nuts in a crossing pattern to **61 to 88 N·m (45 to 65 ft-lb)**.

WARNING

Failing to maintain proper torque of the wheel nuts could result in death or serious injury.

Maintain proper torque of the wheel nuts.

Torquing the Axle Hub Nuts



Torque the axle hub nuts to **339 to 373 N·m (250 to 275 ft-lb)**.

Adjusting the Traction Drive for Neutral

If the machine moves when the traction pedal is in the neutral position, adjust the traction cam.

1. Prepare the machine for maintenance.
2. Raise a front wheel and a rear wheel off the ground and place support blocks under the frame.

WARNING

If the machine is not supported adequately, it may accidentally fall, which could result in death or serious injury.

Raise a front wheel and the rear wheel off the ground to prevent the machine from moving during the adjustment.

Adjusting the Traction Drive for Neutral (continued)

3. Loosen the locknut ② on the traction adjustment cam ①.

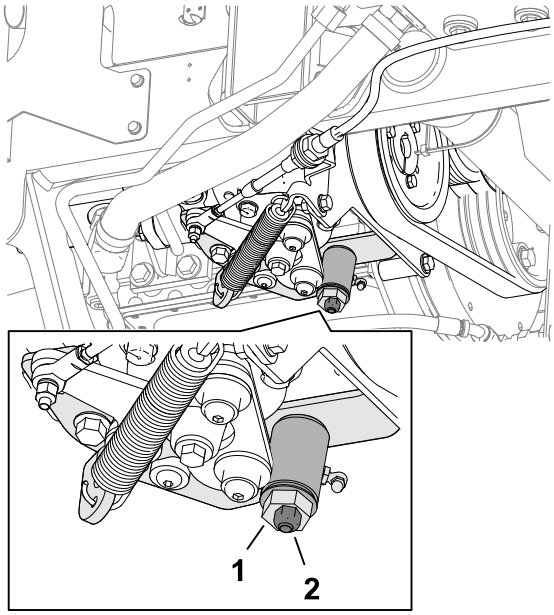

G416234

WARNING

The engine must be running to make a final adjustment of the traction adjustment cam. Contact with hot or moving parts could result in death or serious injury.

Keep your hands, feet, face, and other body parts away from the muffler, other hot parts of the engine, and rotating parts.

---

4. Start the engine and rotate the cam hex in both directions to determine the mid position of the neutral span.
5. Tighten the locknut securing the adjustment.
6. Shut off the engine.
7. Remove the support blocks and lower the machine to the ground. Test drive the machine to ensure that it does not move when the traction pedal is in neutral.

Cooling System Maintenance

Coolant Specifications

The coolant reservoir is filled at the factory with a 50/50 solution of water and ethylene glycol base extended-life coolant.

Coolant Specifications (continued)

IMPORTANT

Use only commercially available coolants that meet the specifications listed in the Extended Life Coolant Standards Table.

Do not use conventional (green) inorganic-acid technology (IAT) coolant in your machine. Do not mix conventional coolant with extended-life coolant.

Coolant Type Table

Ethylene-Glycol Coolant Type	Corrosion Inhibitor Type
Extended-life antifreeze	Organic-acid technology (OAT)

IMPORTANT

Do not rely on the color of the coolant to identify the difference between conventional (green) inorganic-acid technology (IAT) coolant and extended-life coolant.

Coolant manufacturers may dye extended-life coolant in one of the following colors: red, pink, orange, yellow, blue, teal, violet, and green. Use coolant that meets the specifications in the Extended Life Coolant Standards Table.

Extended Life Coolant Standards

ATSM International	SAE International
D3306 and D4985	J1034, J814, and 1941

IMPORTANT

Coolant concentration should be a 50/50 mixture of coolant to water.

- **Preferred:** When mixing coolant from a concentrate, mix it with distilled water.
- **Preferred option:** If distilled water is not available, use a pre-mix coolant instead of a concentrate.
- **Minimum requirement:** If distilled water and pre-mix coolant are not available, mix concentrated coolant with clean drinkable water.

Cooling system capacity

Approximately 5.7 L (6 US qt)

Checking the Coolant Level

CAUTION

If the engine has been running, the pressurized, hot coolant can escape, which could result in minor or moderate injury.

- **Do not open the radiator cap when the engine is running.**
- **Use a rag when opening the radiator cap, and open the cap slowly to allow steam to escape.**

1. Prepare the machine for maintenance.
2. Unlatch and open the hood.
3. Check the coolant level in the expansion tank (1).

   Note: With a cold engine, the coolant level should be approximately midway between the marks on the side of the tank.
4. If the coolant level is low remove the expansion tank cap, add the specified coolant to the tank until the coolant level is midway between the marks on the side of the tank, and assemble the cap to the tank.

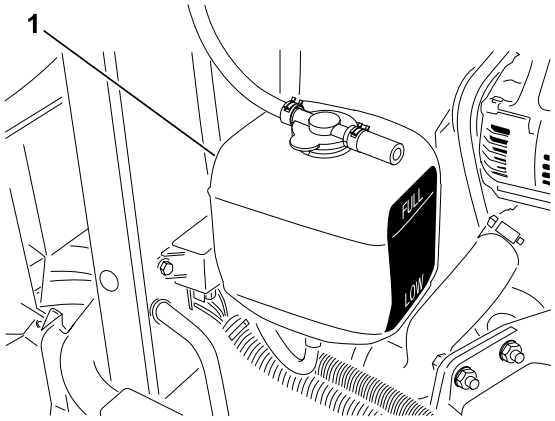

IMPORTANT

Do not overfill the expansion tank.

5. Close and latch the hood.

Cleaning the Engine Cooling System

1. Prepare the machine for maintenance.
2. Unlatch and open the hood.
3. Clean the engine area thoroughly of all debris.

Cleaning the Engine Cooling System (continued)

4. Remove the lower radiator shield (2).
5. Clean both sides of the radiator (1) area thoroughly with water or compressed air.
6. Install the lower radiator shield.
7. Close and latch the hood.

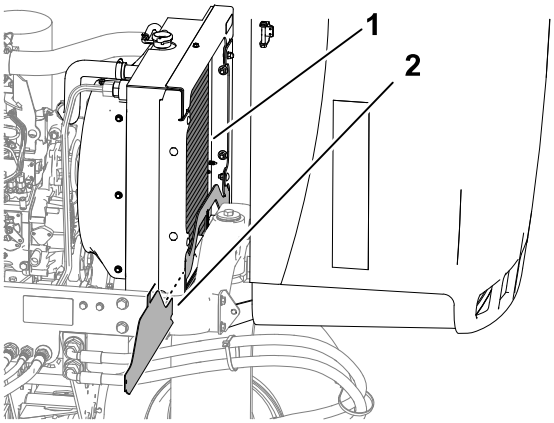

G416240

Brake Maintenance

Adjusting the Parking Brake

1. Prepare the machine for maintenance.
2. Loosen the setscrew (3) securing the knob (2) to the parking-brake lever (1).
3. Rotate the knob until a force of 133 to 178 N (30 to 40 lb) is required to actuate the lever.
4. Tighten the setscrew.

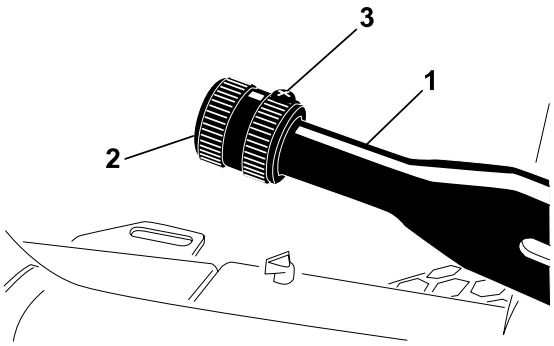

G416249

Belt Maintenance

Servicing the Engine Belts

Tensioning the Alternator/Fan Belt

1. Prepare the machine for maintenance.
2. Unlatch and open the hood.

Servicing the Engine Belts (continued)

3. Check the alternator/fan belt (1) tension by pressing the belt midway between the alternator and crankshaft pulleys.

   Note: With 98 N (22 lb) of force, the belt should deflect 11 mm (7/16 inch).

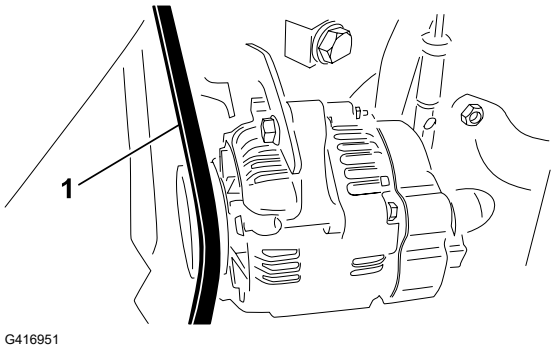

4. If the deflection is incorrect, complete the following procedure to tension the belt:
   A. Loosen the bolt securing the brace to the engine and the bolt securing the alternator to the brace.
   B. Insert a pry bar between the alternator and engine and pry the alternator outward.
   C. When you achieve proper belt tension, tighten the alternator and brace bolts to secure the adjustment.
5. Close and latch the hood.

Replacing the Hydrostat Drive Belt

1. Insert a nut driver or small piece of tubing onto the end of the belt tensioning spring.

⚠ WARNING ⚠

When you replace the hydrostat drive belt, you must release the tension on the spring, which is under a heavy load. Releasing the tension on the spring improperly could result in death or serious injury.

Be careful when releasing the tension on the spring.

---

2. Push down the end of the belt-tension spring down and out of the notch in the tab of the pump mount, and move the spring end forward.

Servicing the Engine Belts (continued)

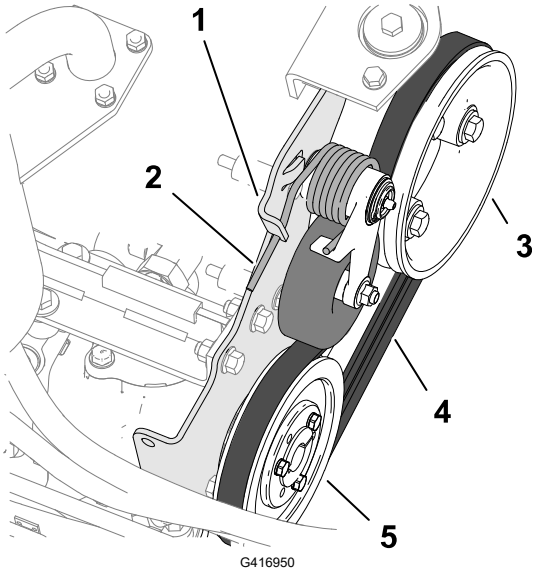

1. Pump mount tab
2. Belt-tension spring
3. Engine pulley
4. Drive belt
5. Hydrostat pulley

3. Replace the belt.
4. Push down the end of the belt-tension spring, and inward, and align it into the notch in the pump mount tab.

Controls Maintenance

Adjusting Mow Ground Speed

1. Prepare the machine for maintenance.
2. Loosen the jam nut (1) for the speed-stop bolt (2).
3. Adjust the speed-stop bolt as follows:

   Note: The mow speed is set at the factory to 9.7 km/h (6 mph).

   - To decrease the mow speed, rotate the speed-stop bolt clockwise.
   - To increase the mow speed, rotate the speed-stop bolt counterclockwise.

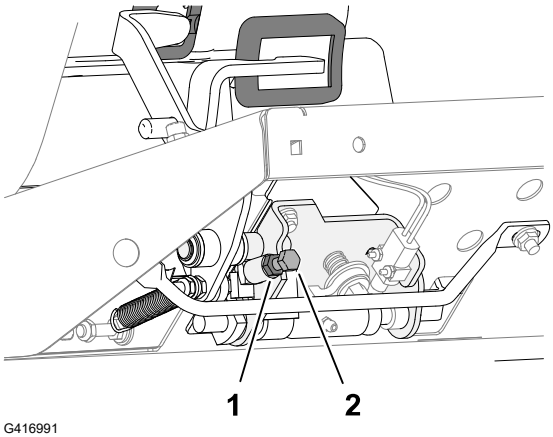

4. Hold the speed-stop bolt and tighten the jam nut.
5. Test drive the machine to confirm the maximum mow speed adjustment.

Adjusting the Throttle

1. Prepare the machine for maintenance.
2. Unlatch and open the hood.
3. Position the throttle lever rearward so that it stops against the control panel slot.
4. Loosen the throttle cable connector (1) on the injection pump lever arm.
5. Hold the injection pump lever arm against the low idle stop and tighten the cable connector.
6. Loosen the bolts securing the throttle control to the control panel.
7. Push the throttle control lever all the way forward.
8. Slide the stop plate until it contacts the throttle lever and tighten the bolts securing the throttle control to the control panel.

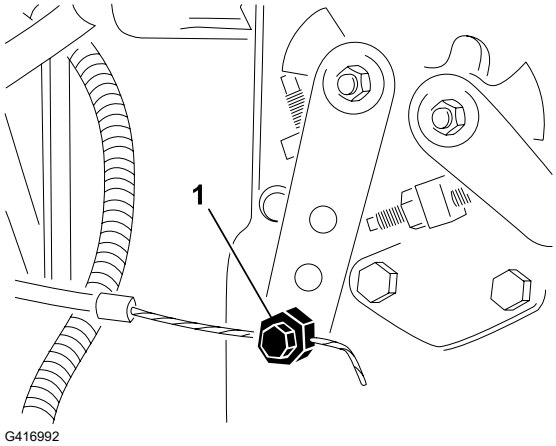

9. If the throttle does not stay in position during operation, torque the locknut used to set the friction device on the throttle lever to **5 to 6 N·m (44 to 53 in-lb)**.

   Note: The maximum force required to operate the throttle lever should be 89 N (20 lb).
10. Close and latch the hood.

Hydraulic System Maintenance

Hydraulic Fluid Specifications

The reservoir is filled at the factory with high-quality hydraulic fluid. Check the level of the hydraulic fluid before you first start the engine and daily thereafter.

Recommended hydraulic fluid: Toro PX Extended Life Hydraulic Fluid; available in 19 L (5 US gallon) pails or 208 L (55 US gallon) drums.

Note: A machine using the recommended replacement fluid requires less frequent fluid and filter changes.

Alternative hydraulic fluids: If Toro PX Extended Life Hydraulic Fluid is not available, you may use another conventional, petroleum-based hydraulic fluid having specifications that fall within the listed range for all the following material properties and that it meets industry standards. Do not use synthetic fluid. Consult with your lubricant distributor to identify a satisfactory product.

Note: Toro does not assume responsibility for damage caused by improper substitutions, so use products only from reputable manufacturers who will stand behind their recommendation.

Hydraulic Fluid Specifications (continued)

High Viscosity Index/Low Pour Point Anti-wear Hydraulic Fluid, ISO VG 46

Material Properties:	
Viscosity, ASTM D445	cSt @ 40°C (104°F) 44 to 48
Viscosity Index ASTM D2270	140 or higher
Pour Point, ASTM D97	-37°C to -45°C (-34°F to -49°F)
Industry Specifications:	Eaton Vickers 694 (I-286-S, M-2950-S/ 35VQ25 or M-2952-S)

Note: Many hydraulic fluids are almost colorless, making it difficult to spot leaks. A red dye additive for the hydraulic fluid is available in 20 ml (0.67 fl oz) bottles. A bottle is sufficient for 15 to 22 L (4 to 6 US gallons) of hydraulic fluid. Order Part No. 44-2500 from your authorized Toro distributor.

IMPORTANT

Toro Premium Synthetic Biodegradable Hydraulic Fluid is the only synthetic biodegradable fluid approved by Toro. This fluid is compatible with the elastomers used in Toro hydraulic systems and is suitable for a wide-range of temperature conditions. This fluid is compatible with conventional mineral oils, but for maximum biodegradability and performance, the hydraulic system should be thoroughly flushed of conventional fluid. The oil is available in 19 L (5 US gallon) pails or 208 L (55 US gallon) drums from your authorized Toro distributor.

Hydraulic tank capacity

13.2 L (3.5 US gallons)

Checking the Hydraulic-Fluid Level

The reservoir is filled at the factory with high-quality hydraulic fluid. The best time to check the hydraulic oil is when the fluid is cold. The machine should be in its transport configuration.

1. Prepare the machine for maintenance.
2. Clean the area around the filler neck (2) and cap (1) of the hydraulic-fluid tank and remove the cap.
3. Remove the dipstick (3) from the filler neck and wipe it with a clean rag.
4. Insert the dipstick into the filler neck; then remove it and check the fluid level.

   Note: The fluid level should be within 6 mm (1/4 inch) of the mark on the dipstick.

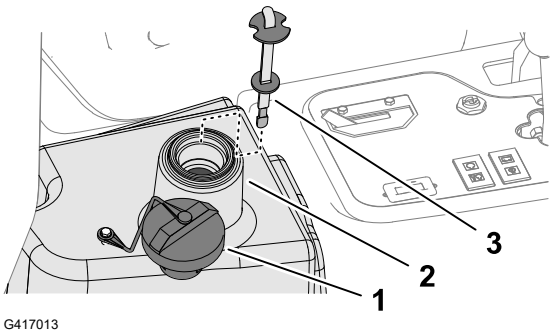

G417013

Checking the Hydraulic-Fluid Level (continued)

5. If the level is low, add the specified fluid to raise the level to the full mark.

IMPORTANT

Do not overfill the hydraulic reservoir.

6. Install the dipstick and cap onto the filler neck.

Inspecting the Hydraulic Lines and Hoses

Inspect the hydraulic lines and hoses for leaks, kinked lines, loose mounting supports, wear, loose fittings, weather deterioration, and chemical deterioration.

Note: Make all necessary repairs before operating.

Changing the Hydraulic Fluid

WARNING

Hot hydraulic fluid can cause severe burns, which could result in death or serious injury.

Allow the hydraulic fluid to cool before performing any maintenance to the hydraulic system.

If the fluid becomes contaminated, contact your authorized Toro distributor because the system must be flushed. Contaminated fluid looks milky or black when compared to clean oil.

1. Prepare the machine for maintenance.
2. Disconnect the hydraulic hose or remove the hydraulic filter and drain the hydraulic fluid into a drain pan.

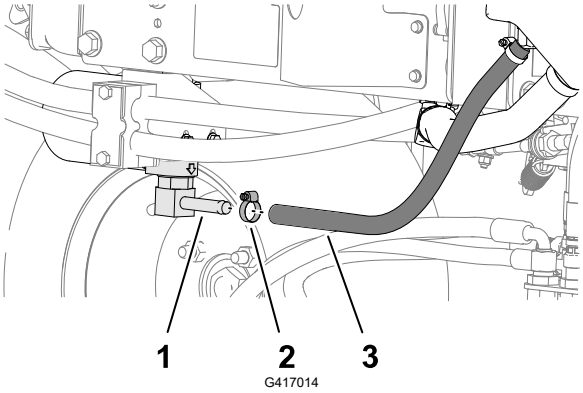

1. Filter head fitting
2. Hose clamp
3. Hydraulic hose

Changing the Hydraulic Fluid (continued)

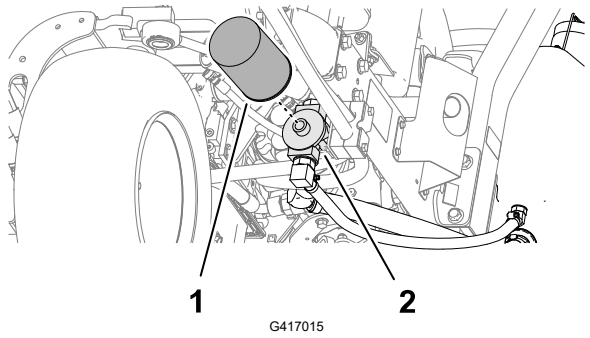

1. Hydraulic filter
2. Filter head

3. Install the hydraulic hose when hydraulic fluid stops draining.
4. Fill the tank with the specified hydraulic fluid.

IMPORTANT

Use only the hydraulic fluids specified. Other fluids could cause system damage.

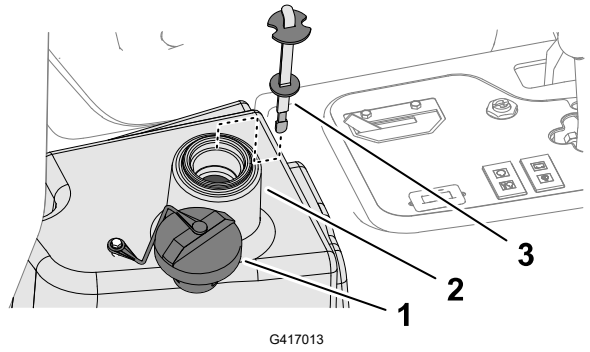

1. Cap
2. Filler neck (hydraulic-fluid reservoir)
3. Dipstick

5. Install the dipstick and cap onto the filler neck.
6. Start the engine and use all hydraulic controls to distribute the hydraulic fluid throughout the system.
7. Check for leaks and then shut off the engine.
8. Check the fluid level and add enough to raise the level to full mark on the dipstick.

IMPORTANT

Do not overfill the reservoir.

Changing the Hydraulic Filter

WARNING

Hot hydraulic fluid can cause severe burns, which could result in death or serious injury.

Allow the hydraulic fluid to cool before performing any maintenance to the hydraulic system.

Use a genuine Toro replacement filter (Part No. 86-3010).

IMPORTANT

Use of any other filter may void the warranty on some components.

1. Prepare the machine for maintenance.
2. Clean around the filter mounting area (2). Place a drain pan under the filter (1) and remove the filter.
3. Lubricate the new filter gasket and fill the filter with hydraulic fluid.
4. Ensure that the filter mounting area is clean. Screw the filter on until the gasket contacts the mounting plate; then tighten the filter 1/2 turn.
5. Start the engine and let it run for about 2 minutes to purge air from the system. Shut off the engine and check for leaks.

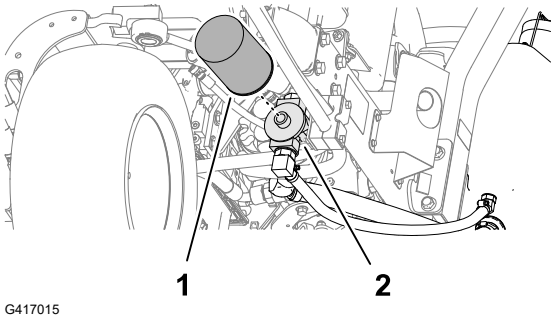

Cutting Unit Maintenance

Checking the Reel-to-Bedknife Contact

Check the reel-to-bedknife contact even if the quality of cut had been acceptable previously.

Note: There must be light contact across the full length of the reel and bedknife.

Backlapping the Cutting Units

WARNING

Contact with the cutting units or other moving parts could result in death or serious injury.

- **Keep your fingers, hands, and clothing away from the cutting units and other moving parts.**
- **Never attempt to turn the cutting units by hand or foot while the engine is running.**

Note: Additional instructions and procedures on backlapping are available in the Toro Reel Mower Basics (with sharpening guidelines), Form 09168SL.

Preparing the Machine

1. Prepare the machine for maintenance.
2. Make the initial reel-to-bedknife adjustments appropriate for backlapping; refer to the cutting unit *Operator's Manual*.
3. Lift the magnetically mounted console cover to expose the mower manifold.

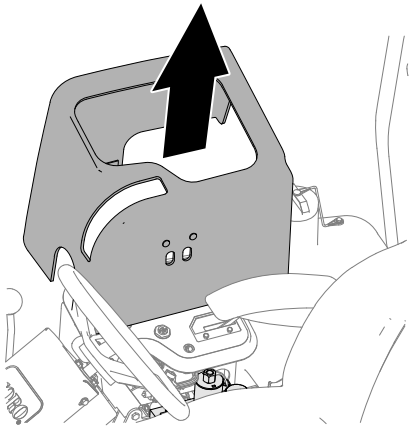

G353458s

4. Move the backlap lever to the R (backlap) position.

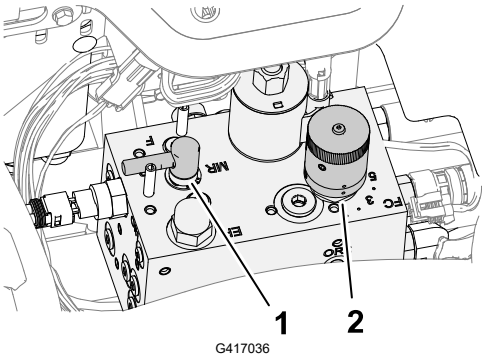

G417036

1. Backlap control
2. Reel speed control

Backlapping the Cutting Units (continued)

Lapping the Reels and Bedknife

WARNING

Changing the engine speed while backlapping may cause the cutting units to stall, which could result in death or serious injury.

- **Never change the engine speed while backlapping.**
- **Backlap only at idle engine speed.**

Note: The seat switch is bypassed when the backlap control is in the backlap position. You do not need to be in the seat, but the parking brake must be engaged for the engine to run.

1. Start the engine and allow it to run at low idle speed.
2. Press the cutting unit drive switch to the ENGAGE position.
3. Apply lapping compound to the reel with a long-handle brush.

DANGER

Contacting the cutting units when they are moving will result in death or serious injury.

To avoid personal injury, ensure that you are clear of the cutting units before proceeding.

IMPORTANT

Never use a short-handled brush.

---

4. If you need to make an adjustment to the cutting units while backlapping, perform the following steps:
   A. Press the cutting unit drive switch to the DISENGAGE position.
   B. Shut off the engine and remove the key.
   C. Adjust to the cutting units.
   D. Repeat steps 1 through 3.
5. Repeat Step 3 for the other cutting units that you want to backlap.

Finishing Backlapping

1. Press the cutting unit control switch to the DISENGAGE position.
2. Shut off the engine.
3. Move the backlap lever to the F (mow) position.

Backlapping the Cutting Units (continued)

IMPORTANT

If you do not change backlap lever to the F (mow) position after backlapping, the cutting units will not function properly.

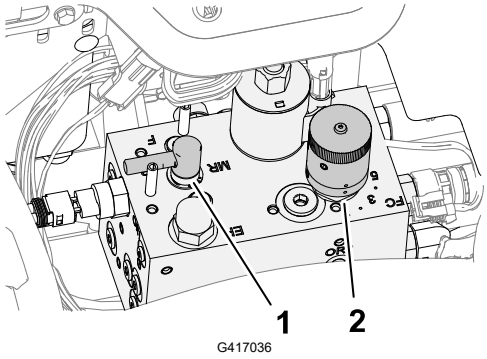

(1) Backlap lever

(2) Reel speed control knob

4. Install the console cover to the control console.
5. Wash all lapping compound off from the cutting units.
6. For a better cutting edge, run a file across the front face of the bedknife after lapping.

   Note: This removes any burrs or rough edges that may have built up on the cutting edge.

Chassis Maintenance

Inspecting the Seat Belt

1. Inspect the seat belt for wear, cuts, and other damage. Replace the seat belt(s) if any component does not operate properly.
2. Clean the seat belt as necessary.

Cleaning

Washing the Machine

Wash the machine as needed using water alone or with a mild detergent. You may use a rag when washing the machine.

Washing the Machine (continued)

IMPORTANT

- **Do not use brackish or reclaimed water to clean the machine.**
- **Do not use power-washing equipment to wash the machine. Power-washing equipment may damage the electrical system, loosen important decals, or wash away necessary grease at friction points. Avoid excessive use of water near the control panel, engine, and battery.**
- **Do not wash the machine with the engine running. Washing the machine with the engine running may result in internal engine damage.**

Storing the Machine

1. Park the machine on a level surface, lower the cutting units, engage the parking brake, shut off the engine, and remove the key.
2. Thoroughly clean the traction unit, cutting units, and the engine.
3. Check the tire pressure.
4. Check all fasteners for looseness; tighten them as necessary.
5. Grease or oil all grease fittings and pivot points. Wipe up any excess lubricant.
6. Lightly sand and use touch-up paint on painted areas that are scratched, chipped, or rusted. Repair any dents in the metal body.
7. Service the battery and cables as follows:
   A. Remove the battery terminals from the battery posts.
   B. Clean the battery, terminals, and posts with a wire brush and baking-soda solution.
   C. Coat the cable terminals and battery posts with Grafo 112X skin-over grease (Toro Part No. 505-47) or petroleum jelly to prevent corrosion.
   D. Slowly charge the battery every 60 days for 24 hours to prevent lead sulfation of the battery.
8. Prepare the engine as follows:
   A. Drain the engine oil from the oil pan and install the drain plug.
   B. Remove and discard the oil filter. Install a new oil filter.
   C. Fill the engine with specified motor oil.
   D. Start the engine and run it at idle speed for approximately 2 minutes.
   E. Shut off the engine and remove the key.
   F. Flush the fuel tank with fresh, clean fuel.
   G. Secure all the fuel-system fittings.
   H. Thoroughly clean and service the air-cleaner assembly.
   I. Seal the air-cleaner inlet and the exhaust outlet with weatherproof tape.
   J. Check the antifreeze protection and add a 50/50 solution of water and ethylene glycol antifreeze as needed for the expected minimum temperature in your area.

Storing the Battery

If you are storing the machine for more than 30 days, remove the battery and charge it fully. Either store it on the shelf or on the machine. Leave the cables disconnected if they are stored on the machine. Store the battery in a cool atmosphere to avoid quick deterioration of

the charge in the battery. To prevent the battery from freezing, ensure that it is fully charged. The specific gravity of a fully charged battery is 1.265 to 1.299.

Using the Standard Control Module (SCM)

The Standard Control Module is a potted electronic device produced in a one-size-fits-all configuration. The module uses solid state and mechanical components to monitor and control standard electrical features required for safe product operation.

The module monitors inputs including neutral, parking brake, PTO, start, backlap, and high temperature. The module energizes outputs including PTO, Starter, and ETR (energize to run) solenoid.

The module is divided into inputs and outputs. Inputs and outputs are identified by green LED indicators mounted on the printed circuit board.

The start circuit input is energized by 12 VDC. All other inputs are energized when the circuit is closed to ground. Each input has a LED that is illuminated when the specific circuit is energized. Use the input LEDs for switch and input circuit troubleshooting.

Output circuits are energized by an appropriate set of input conditions. The 3 outputs include PTO, ETR, and START. Output LEDs monitor relay condition indicating the presence of voltage at 1 of 3 specific output terminals.

Output circuits do not determine output device integrity, so electrical troubleshooting includes output LED inspection and conventional device and wire harness integrity testing. Measure the disconnected component impedance, the impedance through wire harness (disconnect at SCM), or by temporarily ”test energizing” the specific component.

The SCM does not connect to an external computer or handheld device, cannot be re-programmed, and does not record intermittent fault troubleshooting data.

The decal on the SCM only includes symbols. Three LED output symbols are shown in the output box. All other LEDs are inputs. The chart below identifies the symbols.

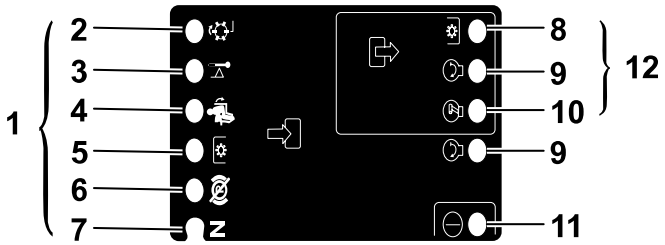

1. Inputs
2. Backlap
3. High temperature
4. In seat
5. PTO switch
6. Parking brake off
7. Neutral
8. PTO
9. Start
10. ETR
11. Power
12. Outputs

Troubleshooting the Standard Control Module (SCM)

1. Determine the output fault you are trying to resolve (PTO, START, or ETR).
2. Move the key switch to the ON position and ensure that the red power LED is illuminated.
3. Move all the input switches to ensure that all LEDs change state.
4. Position the input devices at the appropriate position to achieve the appropriate output. Use the following logic chart to determine the appropriate input condition.
5. If the specific output LED is illuminated without the appropriate output function, check the output harness, connections, and component. Repair as needed.
6. If the specific output LED is not illuminated, check both fuses.
7. If the specific output LED is not illuminated and the inputs are in the appropriate condition, install a new SCM and determine if the fault disappears.

   Note: Each row (across) in the logic chart that follows identifies input and output requirements for each specific product function. The product functions are listed in the left column. The symbols identify the specific circuit condition including energized to voltage, closed to ground, and open to ground.

Logic Chart

Function	INPUTS								OUTPUTS		
	Power ON	In Neu-tral	Start ON	Brake ON	PTO ON	In Seat	Hi Temp	Back-lap	Start	ETR	PTO
Start	—	—	+	O	O	—	O	O	+	+	O
Run (Off Unit)	—	—	O	O	O	O	O	O	O	+	O
Run (On Unit)	—	O	O	—	O	—	O	O	O	+	O
Mow	—	O	O	—	—	—	O	O	O	+	+
Backlap	—	—	O	O	—	O	O	—	O	+	+
Hi Temp	—		O				—		O	O	O

- (–) Indicates a circuit closed to ground—LED ON.
- (O) Indicates a circuit open to ground or de-energized—LED OFF.
- (+) Indicates an energized circuit (clutch coil, solenoid, or start input)—LED ON.
- A blank indicates a circuit that is not involved with the logic.

To troubleshoot, turn on the key without starting the engine. Identify the specific function that does not work and work across the logic chart. Inspect the condition of each input LEDs to ensure that it matches the logic chart.

If the input LEDs are correct, check the output LED. If the output LED is illuminated but the device is not energized, measure the available voltage at the output device, the

Troubleshooting the Standard Control Module (SCM) (continued)

continuity of the disconnected device, and the potential voltage on the ground circuit (floating ground). Repairs will vary depending on your findings.

The Toro Warranty

Two-Year or 1,500 Hours Limited Warranty

Conditions and Products Covered

The Toro Company warrants your Toro Commercial product (“Product”) to be free from defects in materials or workmanship for 2 years or 1,500 operational hours*, whichever occurs first. This warranty is applicable to all products with the exception of Aerators (refer to separate warranty statements for these products). Where a warrantable condition exists, we will repair the Product at no cost to you including diagnostics, labor, parts, and transportation. This warranty begins on the date the Product is delivered to the original retail purchaser. *Product equipped with an hour meter.

Instructions for Obtaining Warranty Service

You are responsible for notifying the Commercial Products Distributor or Authorized Commercial Products Dealer from whom you purchased the Product as soon as you believe a warrantable condition exists. If you need help locating a Commercial Products Distributor or Authorized Dealer, or if you have questions regarding your warranty rights or responsibilities, you may contact us at:

Toro Commercial Products Service Department
8111 Lyndale Avenue South
Bloomington, MN 55420-1196
952-888-8801 or 800-952-2740
E-mail: commercial.warranty@toro.com

Owner Responsibilities

As the product owner, you are responsible for required maintenance and adjustments stated in your *Operator's Manual*. Repairs for product issues caused by failure to perform required maintenance and adjustments are not covered under this warranty.

Items and Conditions Not Covered

Not all product failures or malfunctions that occur during the warranty period are defects in materials or workmanship. This warranty does not cover the following:

- Product failures which result from the use of non-Toro replacement parts, or from installation and use of add-on, or modified non-Toro branded accessories and products.
- Product failures which result from failure to perform recommended maintenance and/or adjustments.
- Product failures which result from operating the Product in an abusive, negligent, or reckless manner.
- Parts consumed through use that are not defective. Examples of parts which are consumed, or used up, during normal Product operation include, but are not limited to, brake pads and linings, clutch linings, blades, reels, rollers and bearings (sealed or greasable), bed knives, spark plugs, castor wheels and bearings, tires, filters, belts, and certain sprayer components such as diaphragms, nozzles, flow meters, and check valves.
- Failures caused by outside influence, including, but not limited to, weather, storage practices, contamination, use of unapproved fuels, coolants, lubricants, additives, fertilizers, water, or chemicals.
- Failure or performance issues due to the use of fuels (e.g. gasoline, diesel, or biodiesel) that do not conform to their respective industry standards.
- Normal noise, vibration, wear and tear, and deterioration. Normal “wear and tear” includes, but is not limited to, damage to seats due to wear or abrasion, worn painted surfaces, scratched decals or windows.

Parts

Parts scheduled for replacement as required maintenance are warranted for the period of time up to the scheduled replacement time for that part. Parts replaced under this warranty are covered for the duration of the original product warranty and become the property of Toro. Toro will make the final decision whether to repair any existing part or assembly or replace it. Toro may use remanufactured parts for warranty repairs.

Deep Cycle and Lithium-Ion Battery Warranty

Deep cycle and Lithium-Ion batteries have a specified total number of kilowatt-hours they can deliver during their lifetime. Operating, recharging, and maintenance techniques can extend or reduce total battery life. As the batteries in this product are consumed, the amount of useful work between charging intervals will slowly decrease until the battery is completely worn out. Replacement of worn out batteries, due to normal consumption, is the responsibility of the product owner.

Note: (Lithium-Ion battery only) Refer to the battery warranty for additional information.

Lifetime Crankshaft Warranty (ProStripe 02657 Model Only)

The Prostripe which is fitted with a genuine Toro Friction Disc and Crank-Safe Blade Brake Clutch (integrated Blade Brake Clutch (BBC) + Friction Disc assembly) as original equipment and used by the original purchaser in accordance with recommended operating and maintenance procedures, are covered by a Lifetime Warranty against engine crankshaft bending. Machines fitted with friction washers, Blade Brake Clutch (BBC) units and other such devices are not covered by the Lifetime Crankshaft Warranty.

Maintenance is at the Owner’s Expense

Engine tune-up, lubrication, cleaning and polishing, replacement of filters, coolant, and completing recommended maintenance are some of the normal services Toro products require that are at the owner’s expense.

General Conditions

Repair by an Authorized Toro Distributor or Dealer is your sole remedy under this warranty.

The Toro Company is not liable for indirect, incidental or consequential damages in connection with the use of the Toro Products covered by this warranty, including any cost or expense of providing substitute equipment or service during reasonable periods of malfunction or non-use pending completion of repairs under this warranty. Except for the Emissions warranty referenced below, if applicable, there is no other express warranty. All implied warranties of merchantability and fitness for use are limited to the duration of this express warranty.

Some states do not allow exclusions of incidental or consequential damages, or limitations on how long an implied warranty lasts, so the above exclusions and limitations may not apply to you. This warranty gives you specific legal rights, and you may also have other rights which vary from state to state.

Note Regarding Emissions Warranty

The Emissions Control System on your Product may be covered by a separate warranty meeting requirements established by the U.S. Environmental Protection Agency (EPA) and/or the California Air Resources Board (CARB). The hour limitations set forth above do not apply to the Emissions Control System Warranty. Refer to the Engine Emission Control Warranty Statement supplied with your product or contained in the engine manufacturer’s documentation.

Countries Other than the United States, Mexico, or Canada

Customers who have purchased Toro products exported from the United States, Mexico, or Canada should contact their Toro Distributor (Dealer) to obtain guarantee policies for your country, province, or state. If for any reason you are dissatisfied with your Distributor's service or have difficulty obtaining guarantee information, contact your Authorized Toro Service Center.

California Proposition 65 Warning Information

What is this warning?

You may see a product for sale that has a warning label like the following:

 **WARNING:** Cancer and Reproductive Harm—www.p65Warnings.ca.gov.

What is Prop 65?

Prop 65 applies to any company operating in California, selling products in California, or manufacturing products that may be sold in or brought into California. It mandates that the Governor of California maintain and publish a list of chemicals known to cause cancer, birth defects, and/or other reproductive harm. The list, which is updated annually, includes hundreds of chemicals found in many everyday items. The purpose of Prop 65 is to inform the public about exposure to these chemicals.

Prop 65 does not ban the sale of products containing these chemicals but instead requires warnings on any product, product packaging, or literature with the product. Moreover, a Prop 65 warning does not mean that a product is in violation of any product safety standards or requirements. In fact, the California government has clarified that a Prop 65 warning “is not the same as a regulatory decision that a product is ‘safe’ or ‘unsafe.’” Many of these chemicals have been used in everyday products for years without documented harm. For more information, go to https://oag.ca.gov/prop65/faqs-view-all.

A Prop 65 warning means that a company has either (1) evaluated the exposure and has concluded that it exceeds the “no significant risk level”; or (2) has chosen to provide a warning based on its understanding about the presence of a listed chemical without attempting to evaluate the exposure.

Does this law apply everywhere?

Prop 65 warnings are required under California law only. These warnings are seen throughout California in a wide range of settings, including but not limited to restaurants, grocery stores, hotels, schools, and hospitals, and on a wide variety of products. Additionally, some online and mail order retailers provide Prop 65 warnings on their websites or in catalogs.

How do the California warnings compare to federal limits?

Prop 65 standards are often more stringent than federal and international standards. There are various substances that require a Prop 65 warning at levels that are far lower than federal action limits. For example, the Prop 65 standard for warnings for lead is 0.5 µg/day, which is well below the federal and international standards.

Why don’t all similar products carry the warning?

- Products sold in California require Prop 65 labelling while similar products sold elsewhere do not.
- A company involved in a Prop 65 lawsuit reaching a settlement may be required to use Prop 65 warnings for its products, but other companies making similar products may have no such requirement.
- The enforcement of Prop 65 is inconsistent.
- Companies may elect not to provide warnings because they conclude that they are not required to do so under Prop 65; a lack of warnings for a product does not mean that the product is free of listed chemicals at similar levels.

Why does Toro include this warning?

Toro has chosen to provide consumers with as much information as possible so that they can make informed decisions about the products they buy and use. Toro provides warnings in certain cases based on its knowledge of the presence of one or more listed chemicals without evaluating the level of exposure, as not all the listed chemicals provide exposure limit requirements. While the exposure from Toro products may be negligible or well within the “no significant risk” range, out of an abundance of caution, Toro has elected to provide the Prop 65 warnings. Moreover, if Toro does not provide these warnings, it could be sued by the State of California or by private parties seeking to enforce Prop 65 and subject to substantial penalties.

Notes:

Notes:


TORO