Form No. 3406-735 Rev B

SnowMaster® 724 ZXR Snowthrower

Model No. 36001—Serial No. 400010798 and Up

Operator's Manual

Introduction

This machine is intended to be used by residential homeowners. It is designed for removing snow from paved surfaces, such as driveways and sidewalks, and other surfaces for traffic on residential or commercial properties. It is not designed for removing materials other than snow, nor is it designed for clearing off gravel surfaces.

Read this information carefully to learn how to operate and maintain your machine properly and to avoid injury and machine damage. You are responsible for operating the machine properly and safely.

You may contact Toro directly at www.Toro.com for machine and accessory information, help finding a dealer, or to register your machine.

Whenever you need service, genuine Toro parts, or additional information, contact an Authorized Service Dealer or Toro Customer Service and have the model and serial numbers of your machine ready. Figure 1 identifies the location of the model and serial numbers on the machine. Write the numbers in the space provided.

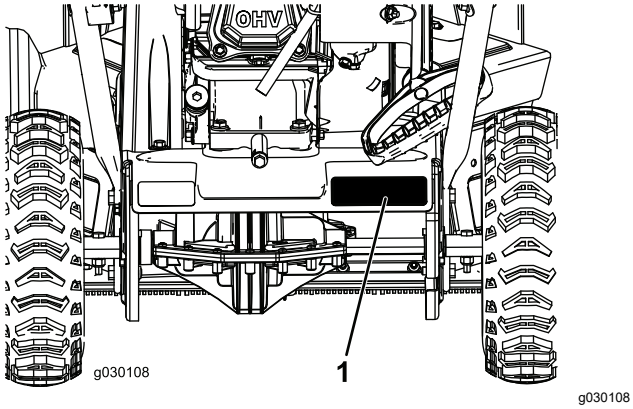

g030108

Figure 1

1. Model and serial number location

Model No. _____

Serial No. _____

This manual identifies potential hazards and has safety messages identified by the safety-alert symbol (Figure 2), which signals a hazard that may cause serious injury or death if you do not follow the recommended precautions.



g000502

Figure 2

1. Safety-alert symbol

This manual uses 2 words to highlight information. **Important** calls attention to special mechanical information and **Note** emphasizes general information worthy of special attention.

For models with stated power, the net power of the engine was laboratory rated by the engine manufacturer in accordance with SAE J1940. As configured to meet safety, emission, and operating requirements, the actual engine horsepower on this class of snow thrower will be significantly lower.

Important: **If you are using this machine above 1500 m (5,000 ft) for a continuous period, ensure that the High Altitude Kit has been installed so that the engine meets CARB/EPA emission regulations. The High Altitude Kit increases engine performance while preventing spark-plug fouling, hard starting, and increased emissions. Once you have installed the kit, attach the high-altitude label next to the serial decal on the machine. Contact any Authorized Toro Service Dealer to obtain the proper High Altitude Kit and high-altitude label for your machine. To locate a dealer convenient to you, access our website at www.Toro.com or contact our Toro Customer Care Department at the number(s) listed in your Emission Control Warranty Statement. Remove the kit from the engine and restore the engine to its original factory configuration when running the engine under 1500 m (5,000 ft). Do not operate an engine that has been converted for high-altitude use at lower altitudes; otherwise, you could overheat and damage the engine.**

If you are unsure whether or not your machine has been converted for high-altitude use, look for the following label (Figure 3).

© 2025—The Toro® Company
8111 Lyndale Avenue South
Bloomington, MN 55420

Register at www.Toro.com.

Original Instructions (EN)
Printed in the USA
All Rights Reserved

3406-735

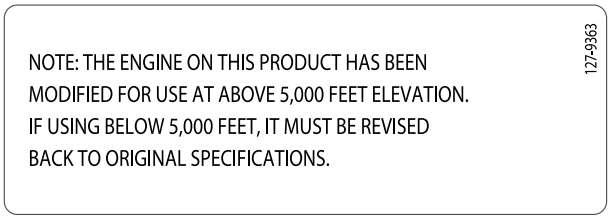

decal127-9363

Figure 3

⚠ WARNING

CALIFORNIA
Proposition 65 Warning

The engine exhaust from this product contains chemicals known to the State of California to cause cancer, birth defects, or other reproductive harm.

Use of this product may cause exposure to chemicals known to the State of California to cause cancer, birth defects, or other reproductive harm.

Contents

Introduction 1
Safety 3
Safety and Instructional Decals 4
Setup 5
1 Unfolding the Handle 5
2 Installing the Discharge Chute 6
3 Checking the Engine-Oil Level 6
4 Checking the Tire Pressure 6
Product Overview 7
Operation 7
Before Operation 7
Safety 7
Filling the Fuel Tank 7
Checking the Engine-Oil Level 8
During Operation 8
Safety 8
Starting the Engine 9
Engaging the Auger 9
Disengaging the Auger 9
Self-Propelling the Machine 9
Shutting Off the Engine 10
Adjusting the Discharge Chute and Chute Deflector 10
Unclogging the Discharge Chute 10
Operating Tips 10
After Operation 11
Safety 11
Preventing Freeze-up after Use 11
Maintenance 11
Recommended Maintenance Schedule(s) 11
Maintenance Safety 11
Checking the Engine-Oil Level 13
Checking and Adjusting the Skids 14
Inspecting the Throwing Edges 14
Changing the Engine Oil 15
Replacing the Spark Plug 16
Adjusting the Auger Cable 16
Adjusting the Transmission Cable 16
Checking the Tire Pressure 17
Storage 18
Storing the Snowthrower 18

Safety

- Read and understand the contents of the manual before you start the engine. Make sure that everyone using this product knows how to use the product and understands the warnings.
- Do not put your hands or feet near moving components on the machine.
- Do not operate the machine without all guards and other safety protective devices in place and working on the machine.
- Keep clear of any discharge opening. Keep bystanders a safe distance away from the machine.
- Keep children out of the operating area and under the watchful care of a responsible adult other than the operator. Never allow children to operate the machine.
- Shut the machine off before servicing, fueling, or unclogging.

You can find additional items of safety information in their respective sections throughout this manual.

Safety and Instructional Decals

Safety and instruction decals are located near areas of potential danger. Replace damaged or missing decals.

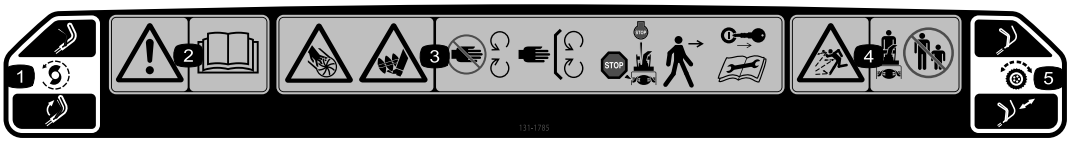

decal131-1785

131-1785

Order Part No. 131-5921

1. Auger drive—squeeze the lever to engage; release the lever to disengage.
2. Warning—read the *Operator's Manual*.
3. Cutting/dismemberment hazard of hand or foot, auger—keep away from moving parts; keep all guards and shields in place; shut off the engine and wait for the auger to stop before leaving the machine; remove the ignition key and read the instructions before servicing or performing maintenance.
4. Thrown object hazard—keep bystanders a safe distance away from the snowthrower.
5. Self-propel drive—push down on the handle to engage the self-propel drive.



decal131-5914

131-5914

Order Part No. 131-5916

1. Cutting/dismemberment hazard of hand or foot, auger—do not place your hand in the chute; remove the ignition key and read the instructions before servicing or performing maintenance.

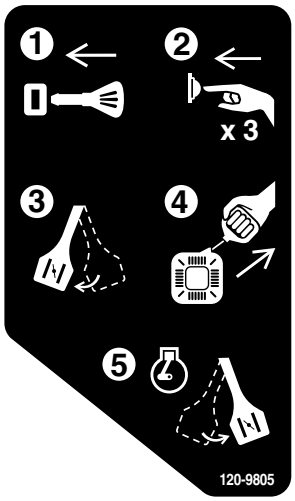

decal120-9805

120-9805

1. Insert the key.
2. Prime the engine 3 times.
3. Engage the choke.
4. Pull the starter cord.
5. Once the engine is running, disengage the choke.

Setup

Loose Parts

Use the chart below to verify that all parts have been shipped.

Procedure	Description	Qty.	Use
1	No parts required	–	Unfold the handle.
2	Bolt (1/4-20 X 1–1/2 inches) Washer-faced locknut (1/4-20 inch)	1 1	Install the discharge chute.
3	No parts required	–	Check the engine-oil level.
4	No parts required	–	Check the tire pressure.

1

Unfolding the Handle

No Parts Required

Procedure

Important: **Ensure the cables are not pinched when unfolding the handle.**

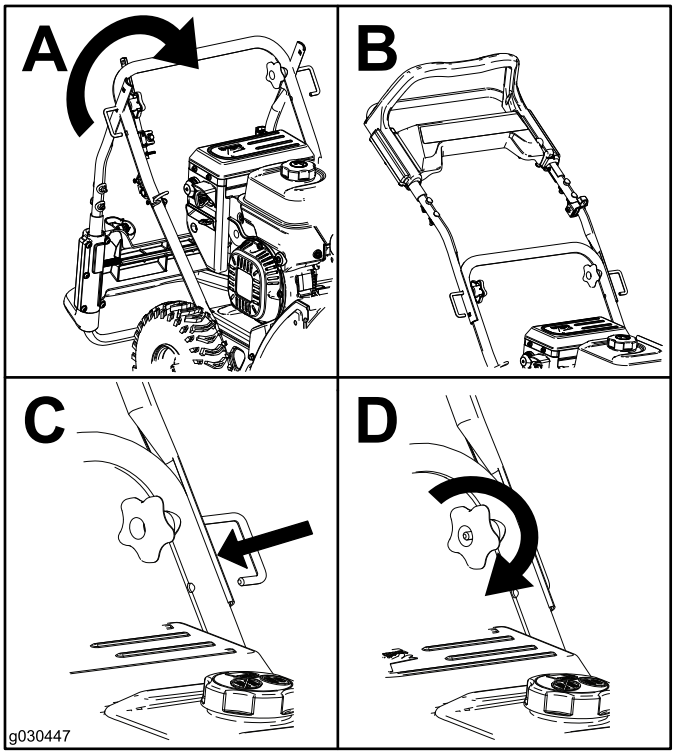

g030447

Figure 4

2

Installing the Discharge Chute

Parts needed for this procedure:

1	Bolt (1/4-20 X 1–1/2 inches)
1	Washer-faced locknut (1/4-20 inch)

Procedure

Insert the chute post through the bracket into the base of the machine and secure it using a bolt and a locknut (Figure 5).

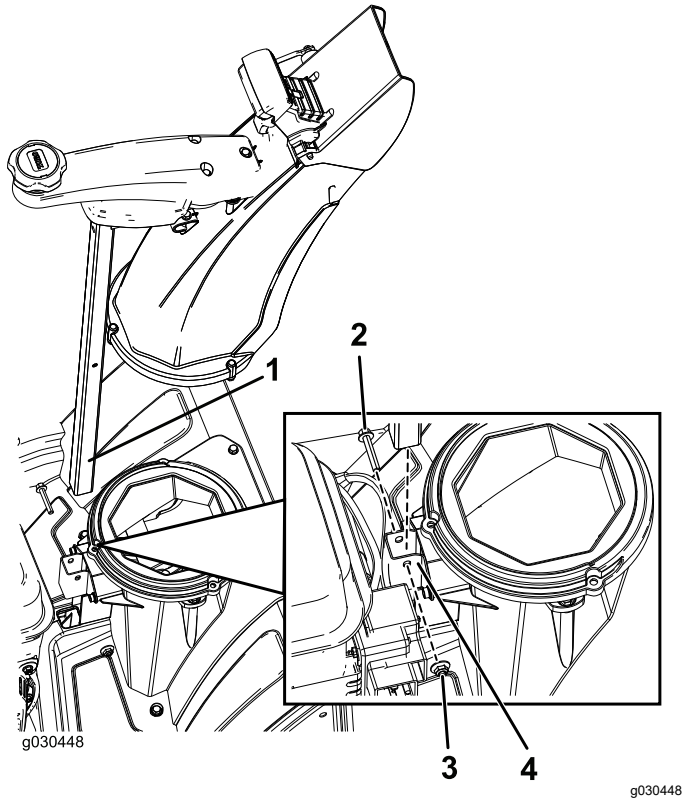

Figure 5

1. Chute post
2. Bolt (1/4-20 X 1–1/2 inches)
3. Washer-faced locknut (1/4-20 inch)
4. Bracket

3

Checking the Engine-Oil Level

No Parts Required

Procedure

Note: Your machine comes with oil in the engine crankcase. Before starting the engine, check the oil level and add oil if necessary.

Refer to Checking the Engine-Oil Level (page 13).

4

Checking the Tire Pressure

No Parts Required

Procedure

The tires are overinflated at the factory for shipping. Reduce the tire pressure equally in both tires to between 103 and 137 kPa (15 and 20 psi).

Product Overview

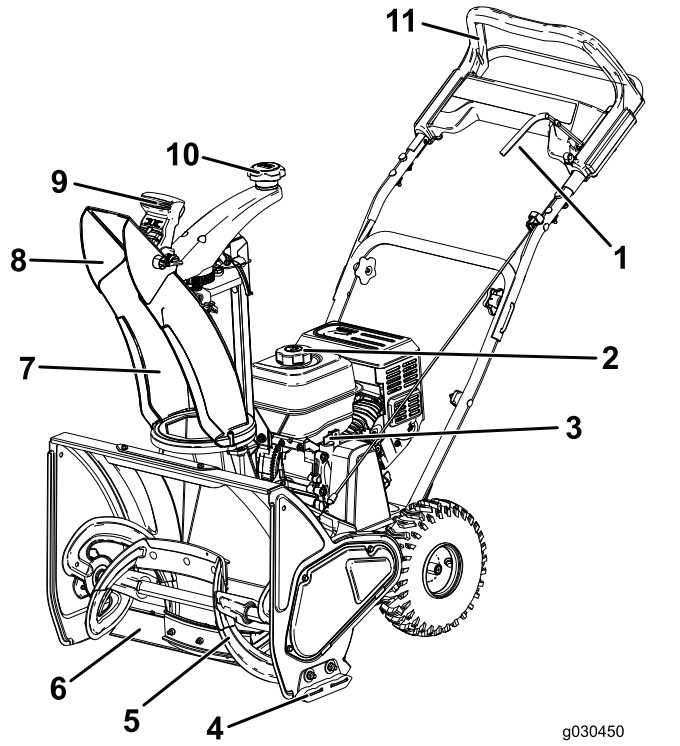

Figure 6

1. Auger lever
2. Fuel-tank cap
3. Dipstick
4. Skid
5. Auger
6. Scraper
7. Discharge chute
8. Chute deflector
9. Chute-deflector control
10. Discharge-chute control
11. Upper handle

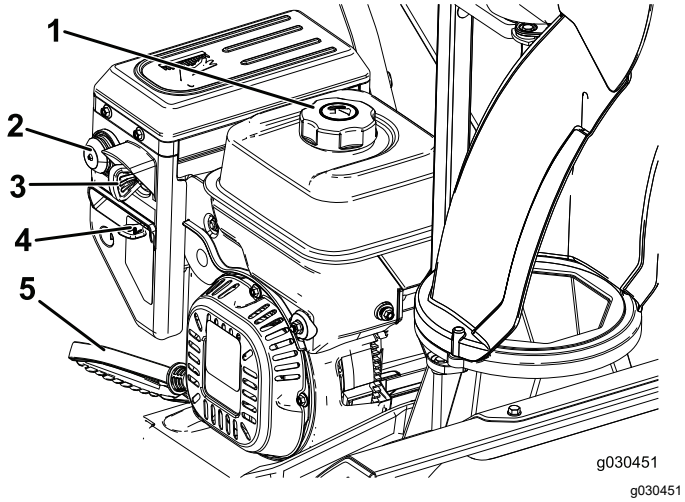

Figure 7

1. Fuel-tank cap
2. Primer
3. Ignition key
4. Choke
5. Recoil-start handle

Operation

Before Operation

Safety

- Do not operate the machine without wearing adequate winter garments. Avoid loose fitting clothing that can get caught in moving parts. Wear substantial, slip-resistant footwear that will improve footing on slippery surfaces.
- Always wear safety glasses or eye protection during operation or while performing an adjustment or repair to protect eyes from foreign objects that may be thrown from the machine.
- Thoroughly inspect the area where the machine is to be used and remove all doormats, sleds, boards, wires, and other foreign objects.
- If a shield, safety device, or decal is damaged, illegible, or lost, repair or replace it before beginning operation. Also, tighten any loose fasteners.

Filling the Fuel Tank

- For best results, use only clean, fresh (less than 30 days old), unleaded gasoline with an octane rating of 87 or higher ((R+M)/2 rating method).
- **Ethanol:** Gasoline with up to 10% ethanol (gasohol) or 15% MTBE (methyl tertiary butyl ether) by volume is acceptable. Ethanol and MTBE are not the same. Gasoline with 15% ethanol (E15) by volume is not approved for use. **Never** use gasoline that contains more than 10% ethanol by volume, such as E15 (contains 15% ethanol), E20 (contains 20% ethanol), or E85 (contains 85% ethanol). Using unapproved gasoline may cause performance problems and/or engine damage which may not be covered under warranty.
- **Do not** use gasoline containing methanol.
- **Do not** store fuel either in the fuel tank or fuel containers over the winter unless you use a fuel stabilizer.
- **Do not** add oil to gasoline.

Important: **To reduce starting problems, add fuel stabilizer to the fuel all season, mixing it with gasoline less than 30 days old.**

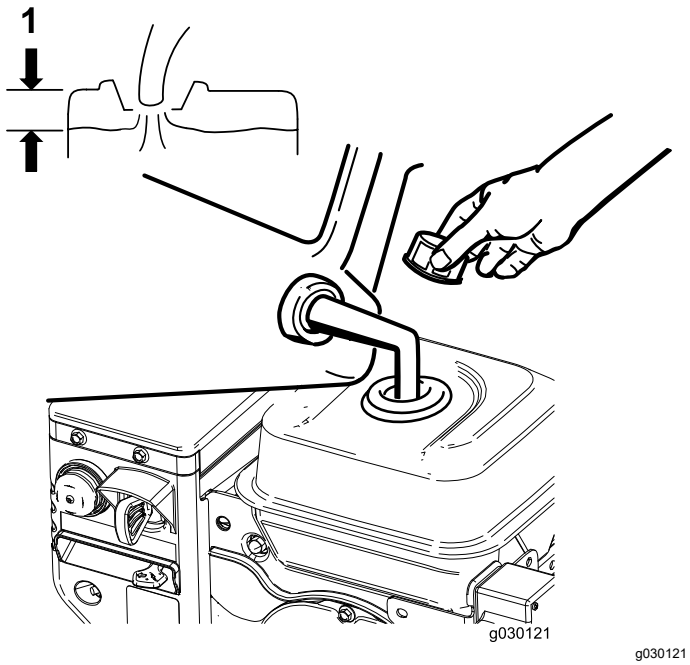

g030121

Figure 8

1. Do not fill above the bottom of the fuel-tank neck.

Checking the Engine-Oil Level

Refer to Checking the Engine-Oil Level (page 13).

During Operation

Safety

- **Rotating auger blades can injure fingers or hands.** Stay behind the handles and away from the discharge opening while operating the machine. **Keep your face, hands, feet, and any other part of your body or clothing away from moving or rotating parts.**
- Never direct the discharge toward people or areas where property damage can occur.
- Exercise caution to avoid slipping or falling. Always be sure of your footing, and keep a firm hold on the handles. Walk; never run.
- Exercise extreme caution when operating on slopes.
- Never operate the machine without good visibility or light.
- Do not operate the machine while ill, tired, or under the influence of alcohol or drugs.
- Look behind and use care when backing up with the machine.
- When not actively clearing snow, disengage power to the rotor blades.
- Do not attempt to clear snow from a gravel or crushed rock surface. This product is intended for use only on paved surfaces.
- Do not use the machine on a roof.
- Never attempt to make any adjustments while the engine is running (except when specifically recommended by manufacturer).
- Stay alert for hidden hazards or traffic.
- After striking a foreign object, stop the engine, remove the ignition key, thoroughly inspect the machine for any damage, and repair the damage before starting and operating the machine.
- If the machine should start to vibrate abnormally, stop the engine and check immediately for the cause.
- Do not run the engine indoors, except when starting the engine and for transporting the machine in or out of the building. Open the outside doors; exhaust fumes are dangerous.
- Do not overload the machine capacity by attempting to clear snow at too fast a rate.
- Never touch a hot engine or muffler.

Starting the Engine

Note: Fully insert the key to start the engine. Turning the key to the middle position does not start the engine.

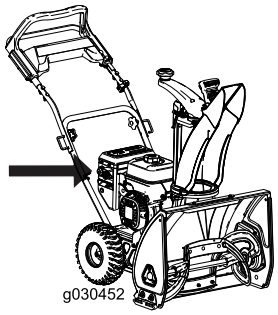

g030452

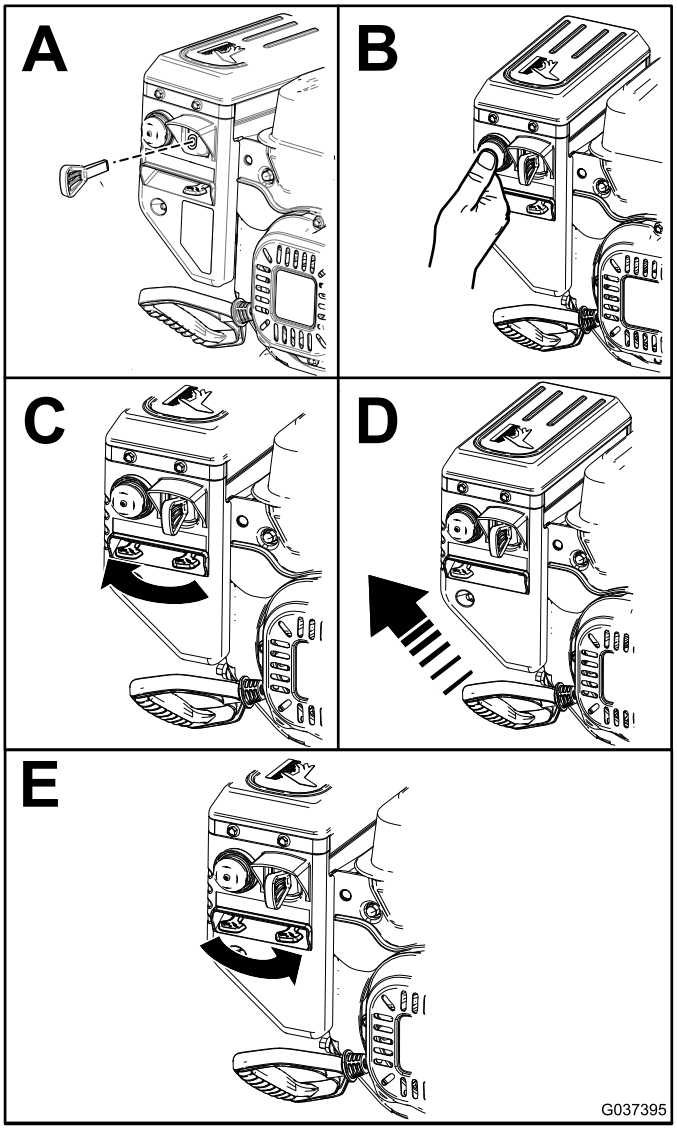

g037395

Figure 9

Note: Prime the engine in B of Figure 9 according to the following table:

Temperature	Suggested Number of Primes
-23°C (-10°F) and above	3
Below -23°C (-10°F)	6

Engaging the Auger

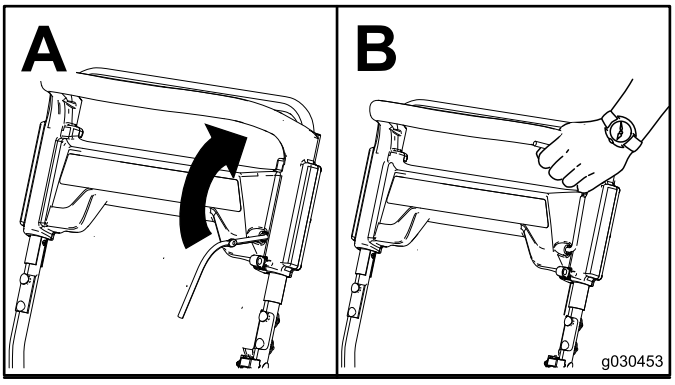

g030453

Figure 10

Disengaging the Auger

To disengage the auger, release the auger lever.

Self-Propelling the Machine

To operate the self-propel drive, simply walk with your hands on the upper handle and your elbows at your sides, and the machine automatically keeps pace with you (Figure 11).

Note: You can self-propel the machine with the auger engaged or disengaged.

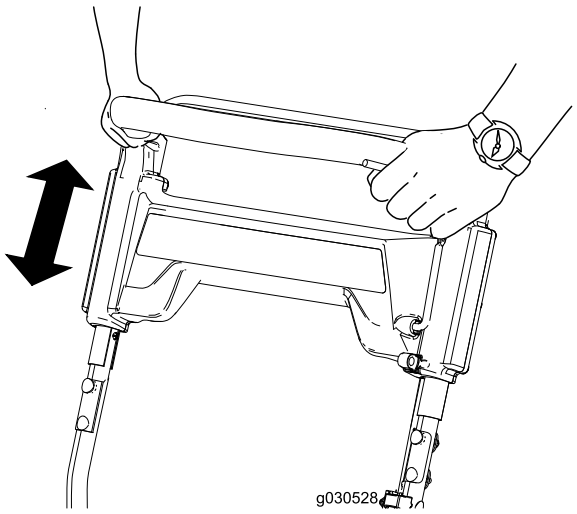

g030528

Figure 11

Shutting Off the Engine

To shut off the engine, remove the key from the ignition or move the key to the middle position.

Adjusting the Discharge Chute and Chute Deflector

To raise or lower the angle of the chute deflector, press the trigger on the chute deflector and move the chute deflector up or down.

To adjust the discharge chute, move the chute handle.

Note: Disengage the auger before adjusting the chute or chute deflector.

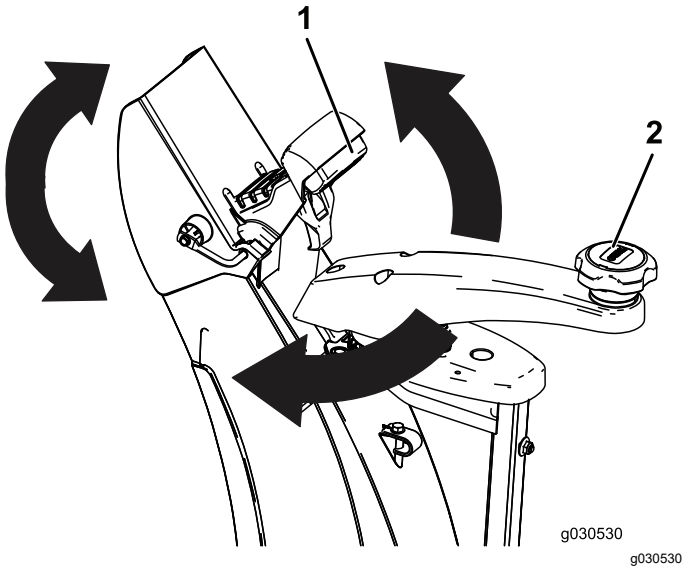

Figure 12

1. Trigger
2. Chute handle

Unclogging the Discharge Chute

⚠ WARNING

If the auger/impeller is running but there is no snow coming out of the discharge chute, the discharge chute may be clogged.

Never use your hands to clear a clogged discharge chute. This could result in personal injury.

1. While remaining in the operating position, release the self-propel handle.
2. Engage the auger.
3. Push down on the handle to raise the front of the machine a few centimeters (inches) off the pavement, then lift the handles quickly to bump the front of the machine onto the pavement.
4. Disengage the auger.
5. Repeat steps 1 through 4, if necessary, until a stream of snow comes out of the discharge chute.

Note: If you cannot unclog the discharge chute by bumping the front of the machine, **shut off the engine, wait for all moving parts to stop, and use a snow-cleanout tool (not included); never use your hand.**

Important: **Unclogging the discharge chute by bumping the front of the machine on the pavement may cause the skids to move. Adjust the skids and tighten the skid bolts securely; refer to Checking and Adjusting the Skids (page 14).**

Operating Tips

⚠ WARNING

The auger can throw stones, toys, and other foreign objects and cause serious personal injury to the operator or to bystanders.

- **Keep the area to be cleared free of all objects that the rotor blades could pick up and throw.**
- **Keep all children and pets away from the area of operation.**
- Remove the snow as soon as possible after it falls.
- If the machine does not propel itself forward on slippery surfaces or in heavy snow, push forward on the handle, but allow the machine to work at its own pace.
- Overlap each swath to ensure complete snow removal.
- Discharge the snow downwind whenever possible.

After Operation

Safety

- Never store the machine with fuel in the fuel tank inside a building where ignition sources are present, such as hot water heaters, space heaters, or clothes dryers. Allow the engine to cool before storing in any enclosure.
- When storing the machine for more than 30 days, refer to Storage (page 18) for important details.

Preventing Freeze-up after Use

- Let the engine run for a few minutes to prevent moving parts from freezing. Shut off the engine, wait for all moving parts to stop, and remove ice and snow from the machine.
- Clean off any snow and ice from the base of the chute.
- Rotate the discharge chute left and right to free it from any ice buildup.
- With the ignition key in the OFF position, pull the recoil-start handle several times to prevent the recoil starter from freezing up.
- In snowy and cold conditions, some controls and moving parts may freeze. Do not use excessive force when trying to operate frozen controls. If you have difficulty operating any control or part, start the engine and let it run for a few minutes.
- Do not use the chute control to attempt to move a frozen discharge chute. Hold down the blue knob and use your hands to rotate the chute.
- Transporting the machine in an open trailer or vehicle can cause the controls or discharge chute to freeze.

Maintenance

Note: Determine the left and right sides of the machine from the normal operating position.

Recommended Maintenance Schedule(s)

Maintenance Service Interval	Maintenance Procedure
After the first hour	• Check for loose fasteners and tighten them if necessary.
After the first 2 hours	• Change the engine oil. • Inspect the auger cable and adjust it if necessary. • Inspect the transmission cable and adjust it if necessary.
Before each use or daily	• Check the engine-oil level and add oil if necessary.
Every 100 hours	• Replace the spark plug.
Yearly	• Check the skids and adjust them if necessary. • Inspect the throwing edges and have an Authorized Service Dealer replace the throwing edges and scraper if necessary. • Change the engine oil. • Inspect the auger cable and adjust it if necessary. • Inspect the transmission cable and adjust it if necessary. • Check the tire pressure. • Check for loose fasteners and tighten them if necessary. • Have an Authorized Service Dealer inspect the drive belt and replace it if necessary.
Yearly or before storage	• Prepare the machine for storage.

Maintenance Safety

Read the following safety precautions before performing any maintenance on the machine:

- Before performing any maintenance, service, or adjustment, shut off the engine and remove the key. If major repairs are ever needed, contact an Authorized Service Dealer.
- Check all fasteners at frequent intervals for proper tightness to be sure the machine is in safe working condition.

- Maintain or replace safety and instruction labels, as necessary.
- Do not change the governor settings on the engine.
- Purchase only genuine Toro replacement parts and accessories.

Checking the Engine-Oil Level

Service Interval: Before each use or daily

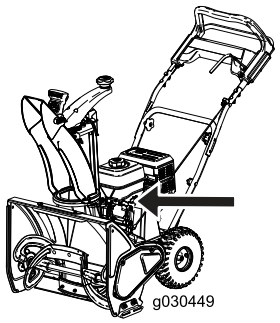

g030449

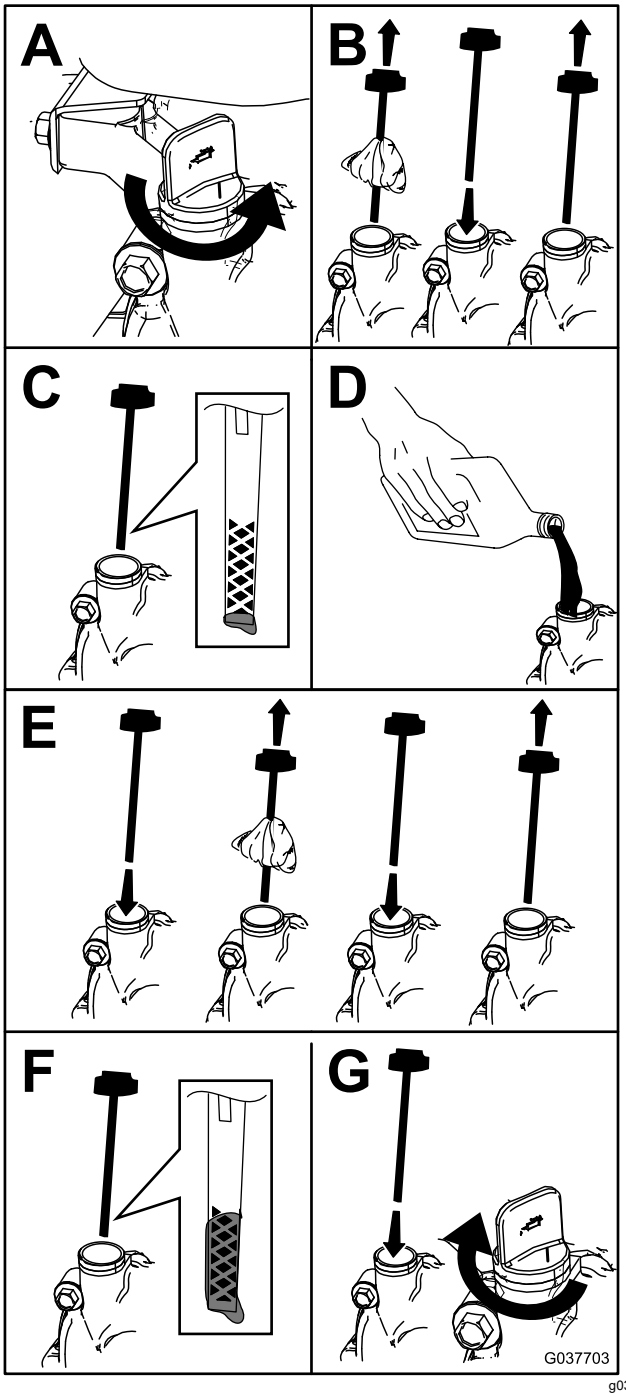

g037703

Figure 13

Checking and Adjusting the Skids

Service Interval: Yearly

Check the skids to ensure that the auger does not contact the paved surface. Adjust the skids as needed to compensate for wear (Figure 14).

1. Loosen the skid bolts.
2. Slide a 5 mm (3/16 inch) board underneath the scraper.

   Note: Using a thinner board will result in a more aggressive scraper. A thicker board will result in a less aggressive scraper.
3. Lower the skids to the ground.

   Note: Ensure that the skids are flat on the ground.
4. Tighten the skid bolts.

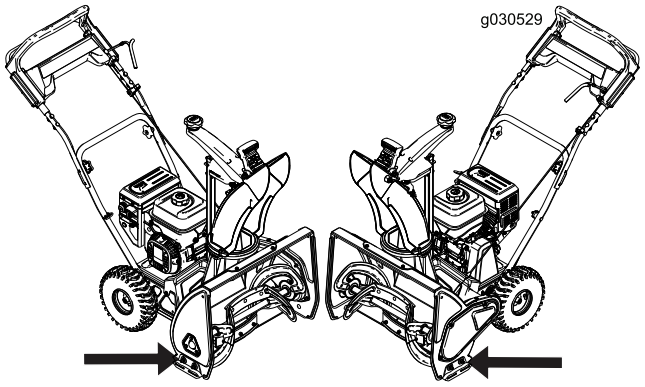

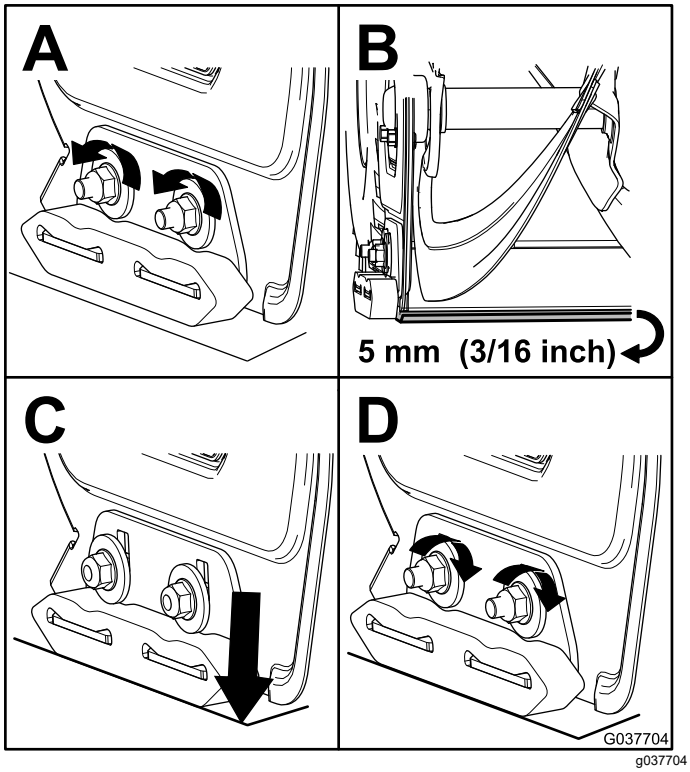

Figure 14

Inspecting the Throwing Edges

Service Interval: Yearly—Inspect the throwing edges and have an Authorized Service Dealer replace the throwing edges and scraper if necessary.

Before each session, inspect the throwing edges for wear. When a throwing edge has worn down to the wear-indicator hole, have an Authorized Service Dealer replace the throwing edges (Figure 15).

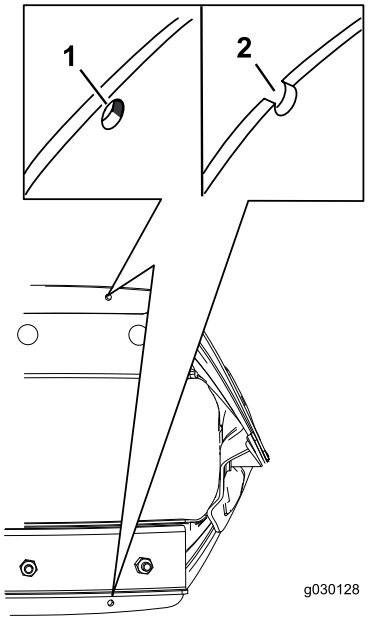

Figure 15

1. The wear-indicator hole is intact; you do not need to replace the throwing edges.
2. The wear-indicator hole is exposed; replace both throwing edges.

Changing the Engine Oil

Service Interval: After the first 2 hours

Yearly

If possible, run the engine for a few seconds before changing the oil because warm oil flows better and carries more contaminants.

Oil type: automotive detergent oil with an API service classification of SJ, SL, or higher.

Use Figure 16 to select the best oil viscosity for the outdoor temperature range expected:

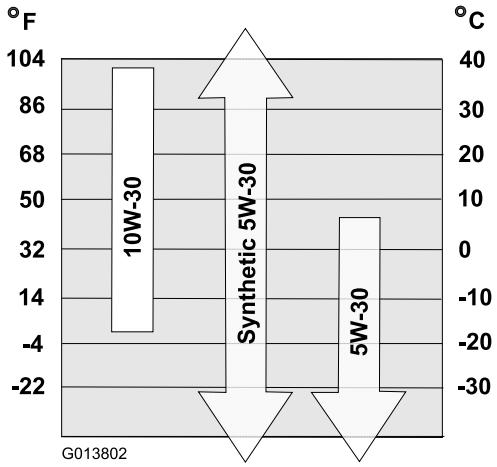

Figure 16

Engine Oil Capacities

Model	Max fill
36001	0.54 L (18 fl oz)

1. Move the machine to a level surface.
2. Place an oil-drain pan under the oil-drain plug, remove the oil-drain plug, and tip the machine backward and drain the used oil in the oil-drain pan (Figure 17).

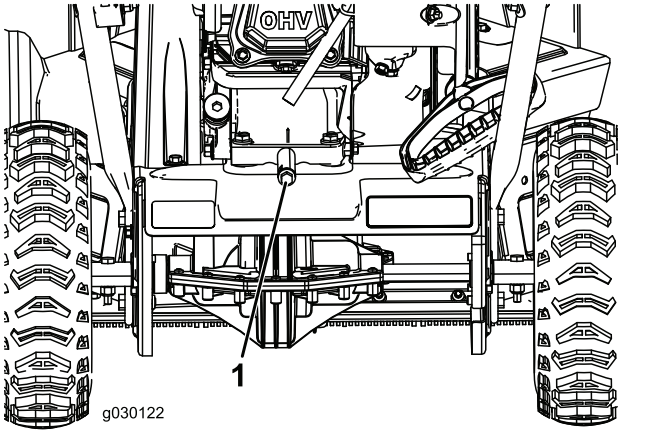

Figure 17

1. Oil-drain plug

3. After draining the used oil, return the machine to the operating position.
4. Install the oil-drain plug and tighten it securely.
5. Clean around the oil-fill cap.
6. Fill the crankcase with oil.
   A. Remove the dipstick and slowly pour oil into the oil-fill tube to raise the oil level to the Full mark on the dipstick (Figure 19). Do not overfill.

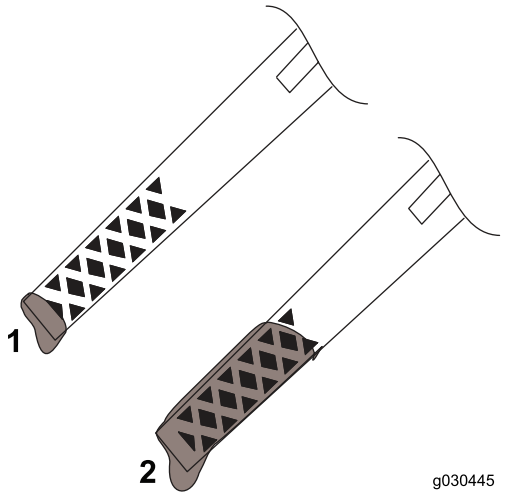

Figure 18

1. Low oil level—add oil
2. Correct oil level

B. Install the dipstick securely.

Replacing the Spark Plug

Service Interval: Every 100 hours—Replace the spark plug.

⚠ WARNING

Replacing the spark plug while the engine is hot can result in burns.

Wait until the engine is cool to replace the spark plug.

Use a Toro spark plug or equivalent (Champion® RN9YC or NGK BPR6ES).

1. Remove the boot (Figure 19).

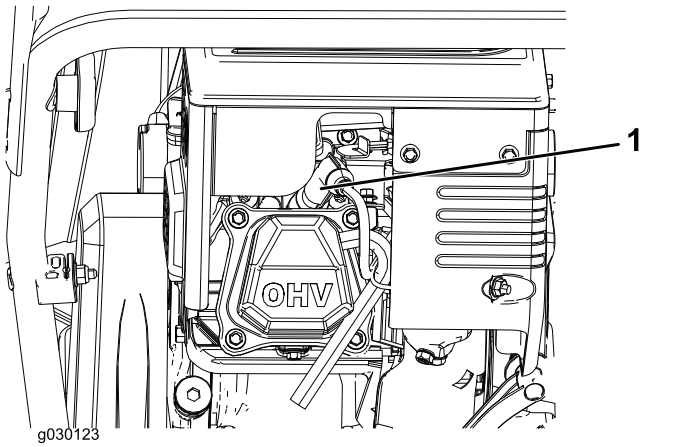

g030123

Figure 19

1. Spark-plug boot

2. Clean around the base of the spark plug.
3. Remove and discard the old spark plug.

   Note: You will need a ratchet wrench extension to remove the spark plug.
4. Set the gap between the electrodes on a new spark plug at 0.76 mm (0.030 inch) as shown in Figure 20.

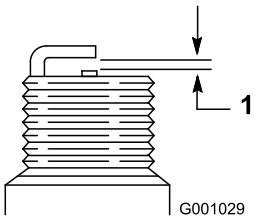

g001029

Figure 20

1. 0.76 mm (0.030 inch)

Adjusting the Auger Cable

Service Interval: After the first 2 hours

Yearly

If the drive belt slips or squeals under heavy load, adjust the auger cable.

1. Loosen the nut on the lower cable clamp, but do not remove it (Figure 21).

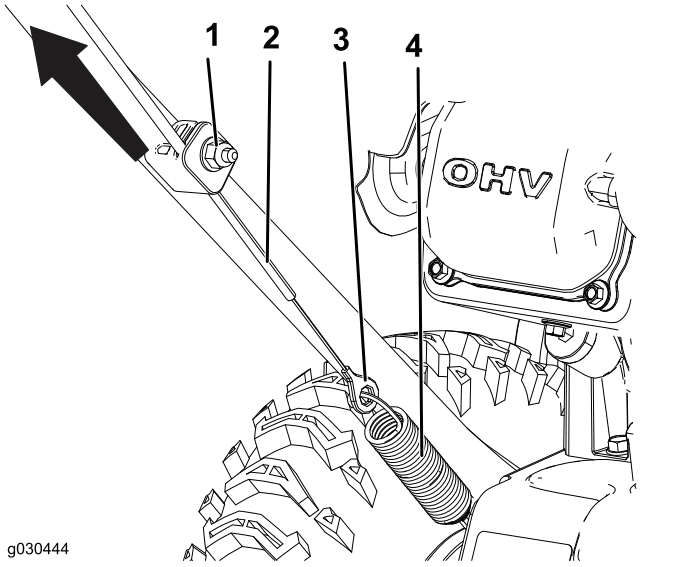

g030444

Figure 21

1. Nut
2. Cable
3. Connector
4. Spring

2. Pull the cable up to remove some slack (Figure 21).

   Important: **Do not remove all the slack from the cable. Removing all the slack from the cable prevents the auger from stopping properly.**
3. Hold the cable in place and tighten the nut (Figure 21).

Adjusting the Transmission Cable

Service Interval: After the first 2 hours

Yearly

If the wheels easily stall out, or if the wheels drive without engaging the self-propel handle, adjust the transmission cable.

1. Loosen the nut on the upper cable clamp, but do not remove it (Figure 22).

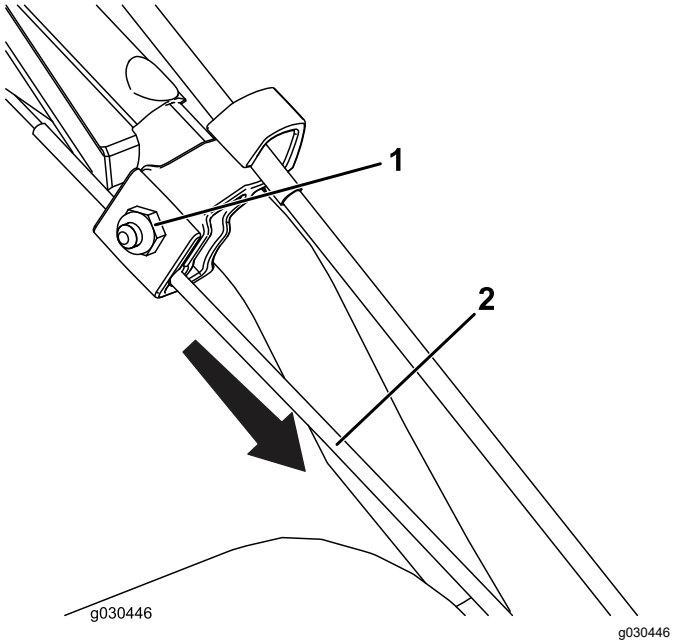

Figure 22

1. Nut
2. Cable

2. Pull the cable down to remove most of the slack in the cable (Figure 22).

   Important: **Do not remove all the slack from the cable. Removing all the slack from the cable may cause the wheels to engage without engaging the self-propel handle.**

3. Tighten the nut (Figure 22).

Checking the Tire Pressure

Service Interval: Yearly

Check the air pressure in the tires and inflate them to 103 to 137 kPa (15 to 20 psi).

Storage

Storing the Snowthrower

⚠ WARNING

- **Gasoline fumes are highly flammable, explosive, and dangerous if inhaled. If you store the machine in an area with an open flame, the gasoline fumes may ignite and cause an explosion.**
- **Do not store the machine in a house (living area), basement, or any other area where ignition sources may be present, such as hot water and space heaters, clothes dryers, furnaces, and other like appliances.**
- **Do not tip the machine backward with fuel in the fuel tank; otherwise, fuel may leak out of the machine.**

1. On the last refueling of the season, add fuel stabilizer to fresh fuel as directed by the engine manufacturer.
2. Run the engine for 10 minutes to distribute the conditioned fuel through the fuel system.
3. Shut off the engine, allow it to cool, and siphon the fuel tank or run the engine until it shuts off.
4. Start the engine and run it until it stops.
5. Choke or prime the engine, start it a third time, and run the engine until it does not start.
6. Drain the fuel in the carburetor through the carburetor-drain bolt into an approved gasoline container.
7. Dispose of unused fuel properly. Recycle it according to local codes, or use it in your automobile.
8. While the engine is still warm, change the engine oil. Refer to Changing the Engine Oil (page 15).
9. Remove the spark plug.
10. Squirt 2 teaspoons of oil into the spark-plug hole.
11. Install the spark plug by hand and then torque it to 27 to 30 N·m (20 to 22 ft-lb).
12. With the ignition key in the OFF position, pull the recoil-start handle slowly to distribute the oil on the inside of the cylinder.
13. Clean the machine.
14. Touch up chipped surfaces with paint available from an Authorized Service Dealer. Sand affected areas before painting, and use a rust preventative to prevent the metal parts from rusting.
15. Tighten any loose fasteners. Repair or replace any damaged parts.
16. Cover the machine and store it in a clean, dry place out of the reach of children. Allow the engine to cool before storing it in any enclosure.

Notes:



Count on it.