Form Number 3329-797

826LE Power Max Snowthrower

Model No. 38621 - 240000001 and up.

Parts Catalog

Ordering Replacement Parts

To order replacement parts, please supply: the part number, the quantity, and the description of each part desired.

Understanding Reference Numbers

Each identified part in an illustration has a reference number. The reference number for a part also appears in the parts list, along with other information about the part.

This catalog uses two special reference number formats, one to indicate parts in a service assembly and another to indicate the quantity of a given part in an illustration.

Service Assembly Reference Numbers

Parts in service assemblies have reference numbers in the form **a:b.** The **a** represents the reference number of the entire service assembly and the **b** represents a sequential number unique to each part within the service assembly.

For example, a wheel assembly might be identified by reference number 6, the tire by **6:**1, the valve by **6:**2, and the wheel by **6:**3. When you order the assembly identified by reference number 6, you receive all parts identified by reference numbers 6:1, 6:2, and 6:3. However, you may also order any part individually. Reference numbers of this type appear in illustrations and in part lists.

Reference Numbers Indicating Quantity

In an illustration, if a reference number indicates more than one part, the reference number has the form **nX y.** The **n** represents the quantity of the part, the **X** is the multiplication symbol, and the **y** represents the reference number.

For example, in an illustration, the reference number **2X 37** means that two of the parts identified by reference number 37 are indicated.

©The Toro Company - 2003
All Rights Reserved

Part Description Abbreviations

Part descriptions in this catalog may include the following abbreviations.

AR. . . . . as required
ASM. . . . . assembly
CARR. . . . . carriage
DEG. . . . . degrees
FH. . . . . flat head
GA. . . . . gauge
HF. . . . . hex flange
HH. . . . . hex head
HHF. . . . . hex head flange
HHFTF. . . . . hex head flange thread forming
HJ. . . . . hex jam
HLH. . . . . hex lag head
HOC. . . . . height-of-cut
HS. . . . . hex
HSBH. . . . . hex socket button head
HSFH. . . . . hex socket flat head
HSH. . . . . hex socket head
HWH. . . . . hex washer head
HWHTF. . . . . hex washer head thread forming
HYD. . . . . hydraulic
INC. . . . . incorporated
LH. . . . . left hand
NI. . . . . nylon insert
PPH. . . . . phillips pan head
PTH. . . . . phillips truss head
PTO. . . . . power take off
RH. . . . . right hand
SFH. . . . . slotted fillister head
SHH. . . . . slotted hex head
SHWH. . . . . slotted hex washer head
SPH. . . . . slotted pan head
SQH. . . . . square head
SRH. . . . . slotted round head
STD. . . . . standard
TAP. . . . . self tapping
TTH. . . . . torx truss head
WH. . . . . wing head

Footnotes

❶ Not illustrated
❷ Not serviced separately
❸ Obtain parts from your local Tecumseh dealer
❹ Included in Gasket Set 36450C

Contents

Description	Page
Auger and Housing Assembly	3
Auger Gearcase Assembly No. 106-4580	4
Chute Assembly	5
Chain Drive Assembly	6
Frame Assembly	7
Handle and Control Assembly	9
Handle and Control Assembly No. 2	10
Chute Control Assembly	11
Engine Assembly	12
Carburetor Assembly No. 640052 Tecumseh HMSK-80 155724X	13
Engine Assembly No. 1 Tecumseh HMSK-80 155724X	14
Engine Assembly No. 2 Tecumseh HMSK-80 155724X	16
Rewind Starter Assembly No. 590749 Tecumseh HMSK-80 155724X	18
Rewind Starter Assembly No. 590733 (Optional) Tecumseh HMSK-80 155724X	19
220 Volt Electric Starter Assembly No. 37102 Tecumseh HMSK-80 155724X	20

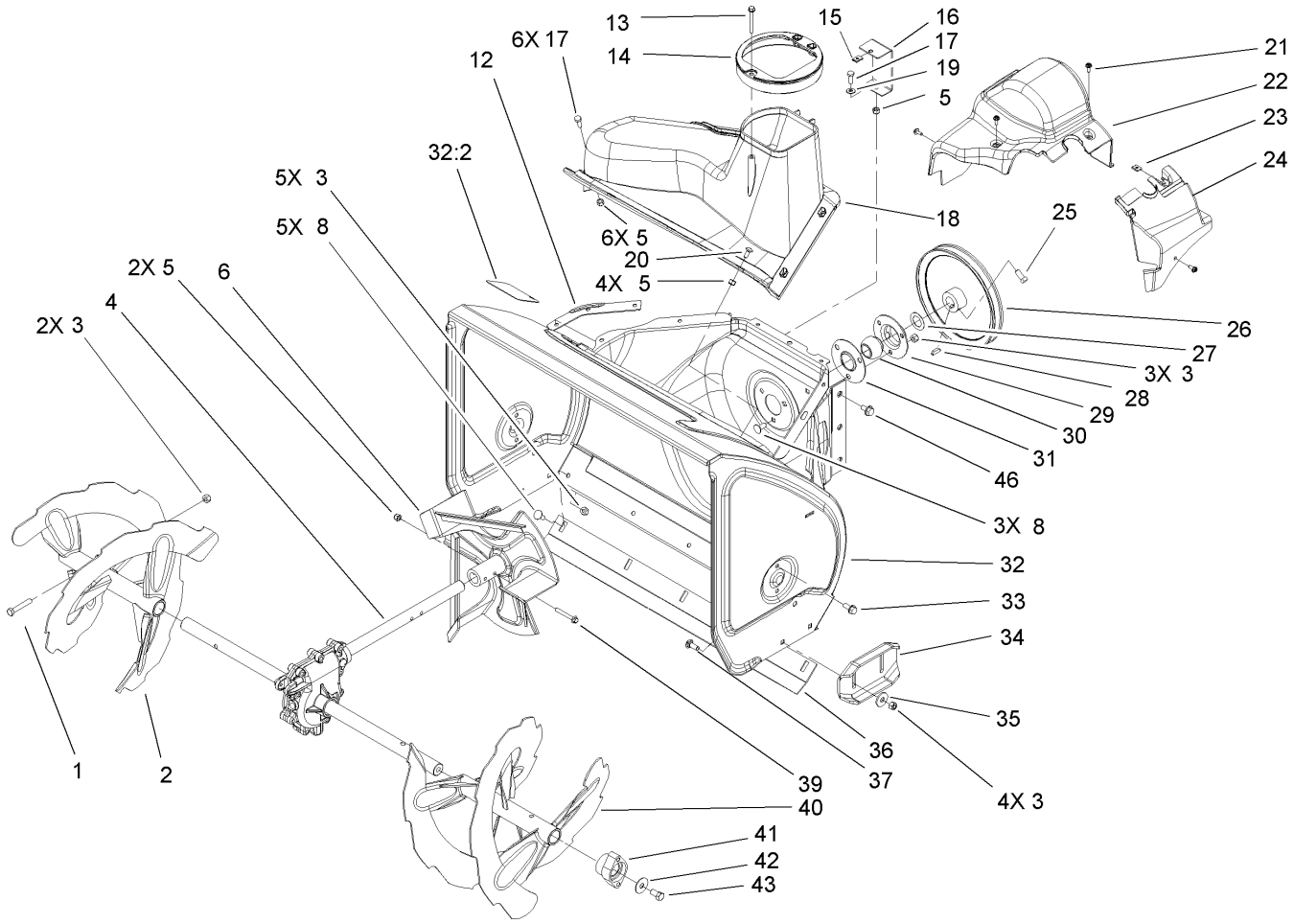

Auger and Housing Assembly

Ref	Part No.	Qty.	Description
1	322-10	2	Screw-HH
2	106-7289-03	1	Auger-Rh, 26in
3	3296-29	14	Nut-Lock, NI
4	106-4580	1	26in Auger Gearcase ASM
5	3296-42	13	Nut-Lock, NI
6	106-4576-03	1	Impeller ASM
8	3230-23	8	Screw-CARR
12	107-1017-03	1	Seal-Cover Flange
13	107-3003	1	Screw-Plastite
14	107-3006	1	Guide-Chute
15	107-1013	1	Nut-Speed, U-Type
16	107-1014-03	1	Bracket-Cover, Clip Nut
17	321-4	7	Screw-HH
18	107-3007	1	Cover
19	3256-22	1	Washer-Flat
20	3229-1	4	Screw-CARR
21	32144-112	4	Screw-HWHTF
22	107-1001	1	Cover-Belt
23	701493	1	Nut-Speed
24	107-1016	1	Cover-Belt Extension
25	3242-4	2	Screw-Set, SQH
26	62-1300	1	Pulley-Impeller
27	252-80	1	Washer-Thrust
28	3257-23	1	Key-Woodruff

Ref	Part No.	Qty.	Description
29	26-6110	1	Flange-Cup, Bearing
30	63-3450	1	Bearing-Ball
31	26-6120	1	Flange-Cup, Bearing
32	107-3822	1	26in Auger Housing ASM
32:2	107-3040	1	Decal-Auger Danger
33	32144-70	4	Screw-HH
34	106-4588-01	2	Skid
35	52-2861	4	Washer
36	105-9976-01	1	Scraper-Fixed
37	3230-16	4	Screw-CARR
39	321-44	2	Screw-HHF
40	106-7299-03	1	26in LH Auger ASM
41	106-4570	2	Auger-Bearing
42	3-0750	2	Washer
43	323-4	2	Screw-HH
46	32144-14	6	Screw-HWH

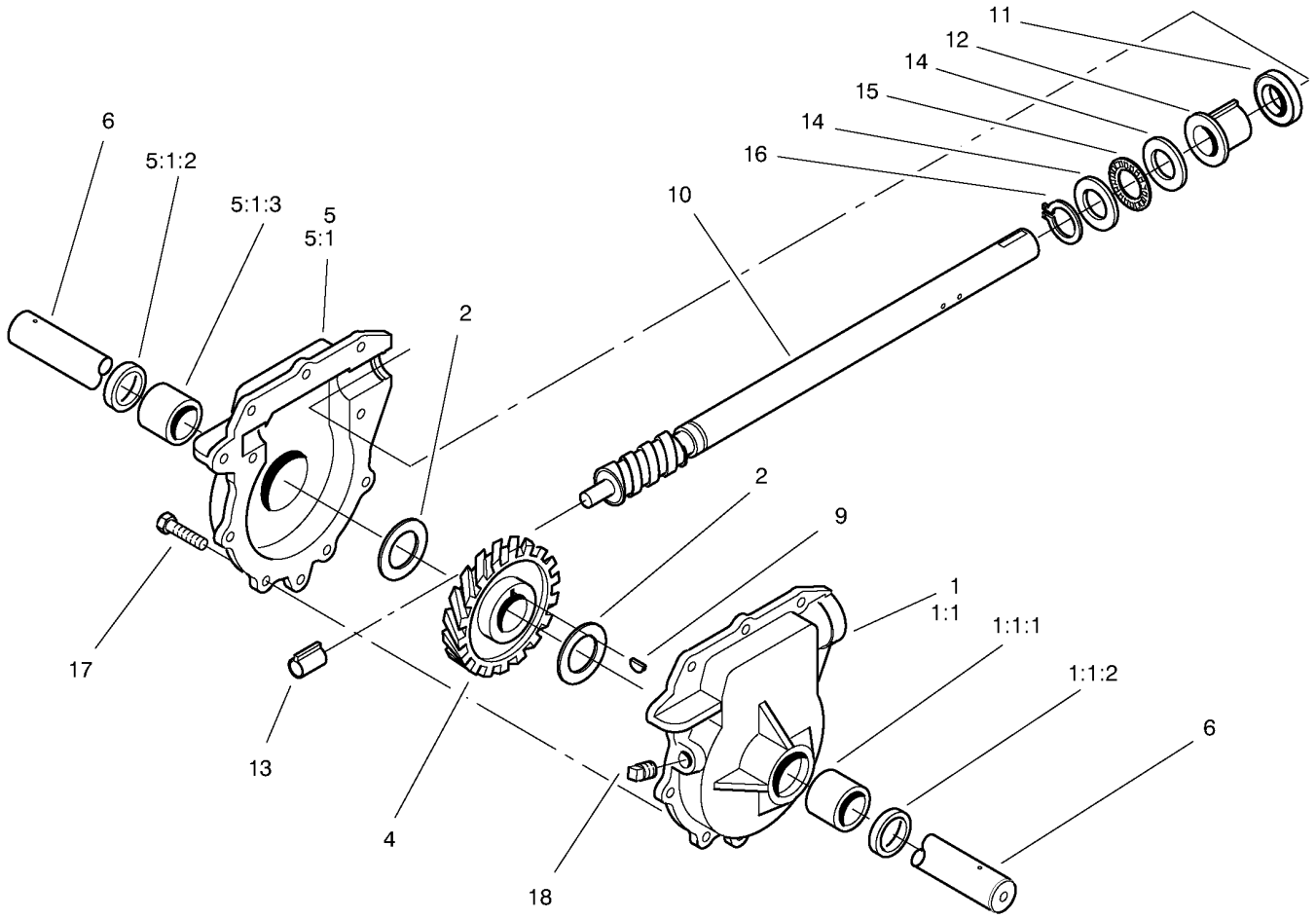

Auger Gearcase Assembly No. 106-4580

Ref	Part No.	Qty.	Description
1	74-1570	1	LH Auger Gearcase ASM
❷1:1		1	LH Auger Gearcase ASM
1:1:1	256-237	1	Bushing
1:1:2	7-0045	1	Seal-Oil
2	252-71	2	Washer-Thrust
4	62-0120	1	Gear-Helical
5	74-1580	1	RH Auger Gearcase ASM
❷5:1		1	RH Auger Gearcase ASM
5:1:2	7-0045	1	Seal-Oil
5:1:3	256-237	1	Bushing
6	106-4579	1	Shaft-Auger
9	3257-10	1	Key-Woodruff
10	66-7811	1	Shaft-Impeller
11	253-149	1	Seal-Oil
12	37-6560	1	Bushing-Input
13	62-1150	1	Bushing-Worm
14	252-78	2	Bearing-Thrust
15	252-76	1	Bearing-Thrust
16	32151-33	1	Ring-Retaining, Ext
17	32144-110	9	Screw-HWH
18	281-1	1	Plug-Pipe, SQH

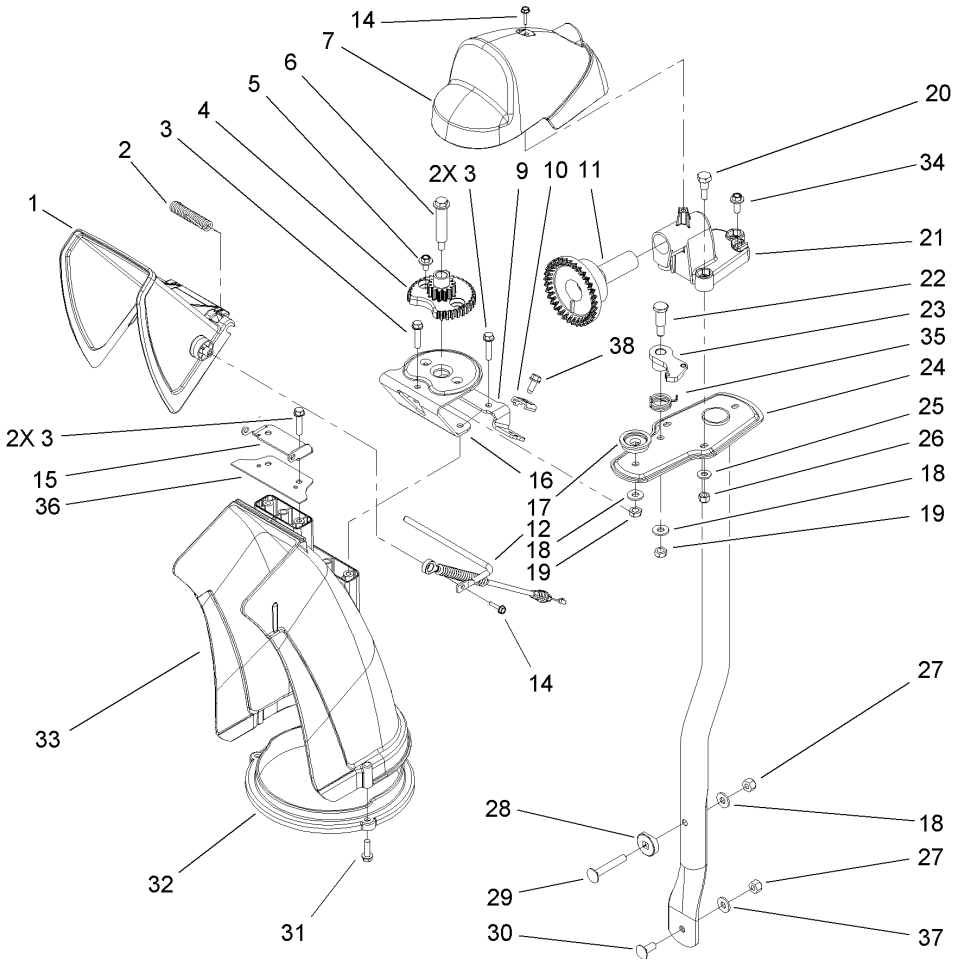

Chute Assembly

Ref	Part No.	Qty.	Description
1	106-7309	1	Deflector-Chute, Ce
2	106-4594	1	Spring-Torsion
3	46-8092	5	Screw-Plastite
4	106-4472	1	Gear-Chute
5	46-6810	2	Screw And Washer ASM
6	100-9880	1	Bolt-Shoulder
7	106-4585	1	Cover-Gear, Chute
9	106-7296	1	Bracket-Cable, Clamp
10	106-7297	1	Clamp-Cable
11	106-4471	1	Gear-Face
12	107-1021	1	Rod-Deflector
14	98-1375	2	Screw-HWH
15	106-7266	1	Bracket-Deflector
16	106-4582-03	1	Bracket-Support, Chute
17	106-4422	1	Spacer-Chute
18	3256-2	3	Washer-Flat
19	3296-47	2	Nut-Lock, NI
20	106-7276	3	Screw-Shoulder
21	106-7257	1	Mount-Gear, Face
22	63-2650	1	Screw-Shoulder
23	106-4476	1	Latch-Chute
24	106-7253-03	1	Tube-Support
25	3256-22	3	Washer-Flat
26	3296-42	3	Nut-Lock, NI

Ref	Part No.	Qty.	Description
27	3296-29	2	Nut-Lock, NI
28	106-7260	1	Washer-Curved
29	3230-5	1	Screw-CARR
30	3230-23	1	Screw-CARR
31	46-8091	3	Screw-HWH
32	105-9991	1	Ring-Chute
33	106-4440	1	Chute-Discharge
34	46-6811	1	Screw-HWH
35	106-4475	1	Spring-Torsion
36	107-1019	1	Seal-Chute
37	3290-456	1	Washer-Belleville
38	32144-10	1	Screw-HWH

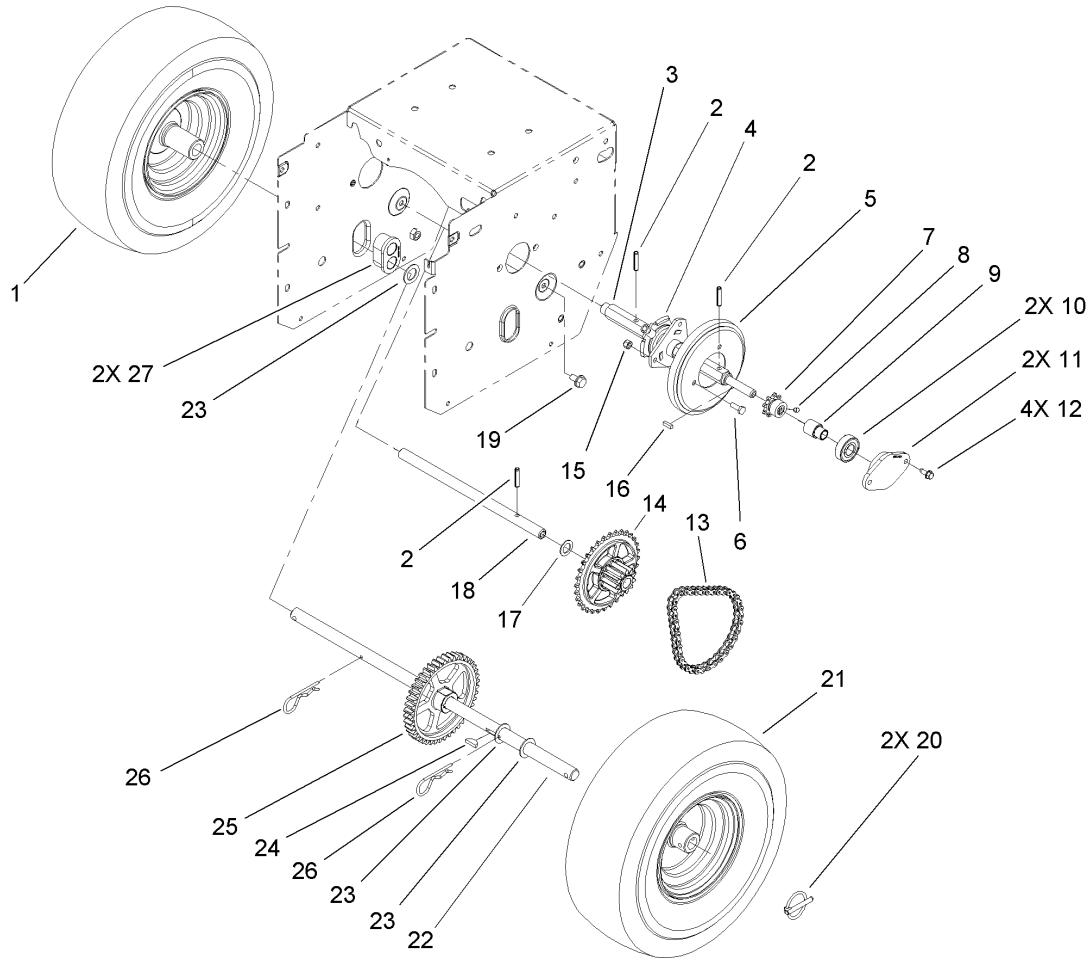

Chain Drive Assembly

Ref	Part No.	Qty.	Description
1	107-3042	1	Tire
1	107-3043	1	Rim-Tire
2	32121-9	3	Pin-Spring
3	106-4593	1	Shaft-Hex, Chain
4	106-4434	1	Trunion-Hex
5	106-4480	1	Wheel-Friction
6	321-4	3	Screw-HH
7	106-7317	1	Sprocket-8 Tooth
8	3245-32	2	Screw-HS
9	106-7250	1	Spacer-Bearing, Sleeve
10	100-1048	2	Bearing-Ball
11	106-7308	2	Retainer-Bearing
12	32144-10	4	Screw-HWH
13	106-7293	1	Chain-Roller
13	2710-6	1	Link-Connecting
14	106-7261	1	Sprocket ASM
15	3296-42	3	Nut-Lock, NI
16	94-8850	1	Key-Square
17	107-3041	1	Washer-Flat
18	106-4592	1	Shaft-Intermediate
19	32144-14	2	Screw-HWH
20	107-3039	2	Klik Pin ASM
21	107-3042	1	Tire
21	107-3043	1	Rim-Tire

Ref	Part No.	Qty.	Description
22	106-4449	1	Shaft-Axle
23	3-8664	3	Washer-Thrust
24	3257-7	1	Key-Woodruff
25	106-4572	1	Gear-Axle, 44 Tooth
26	3290-343	2	Pin-Hair
27	106-4558	2	Bearing-Axle

3329-797

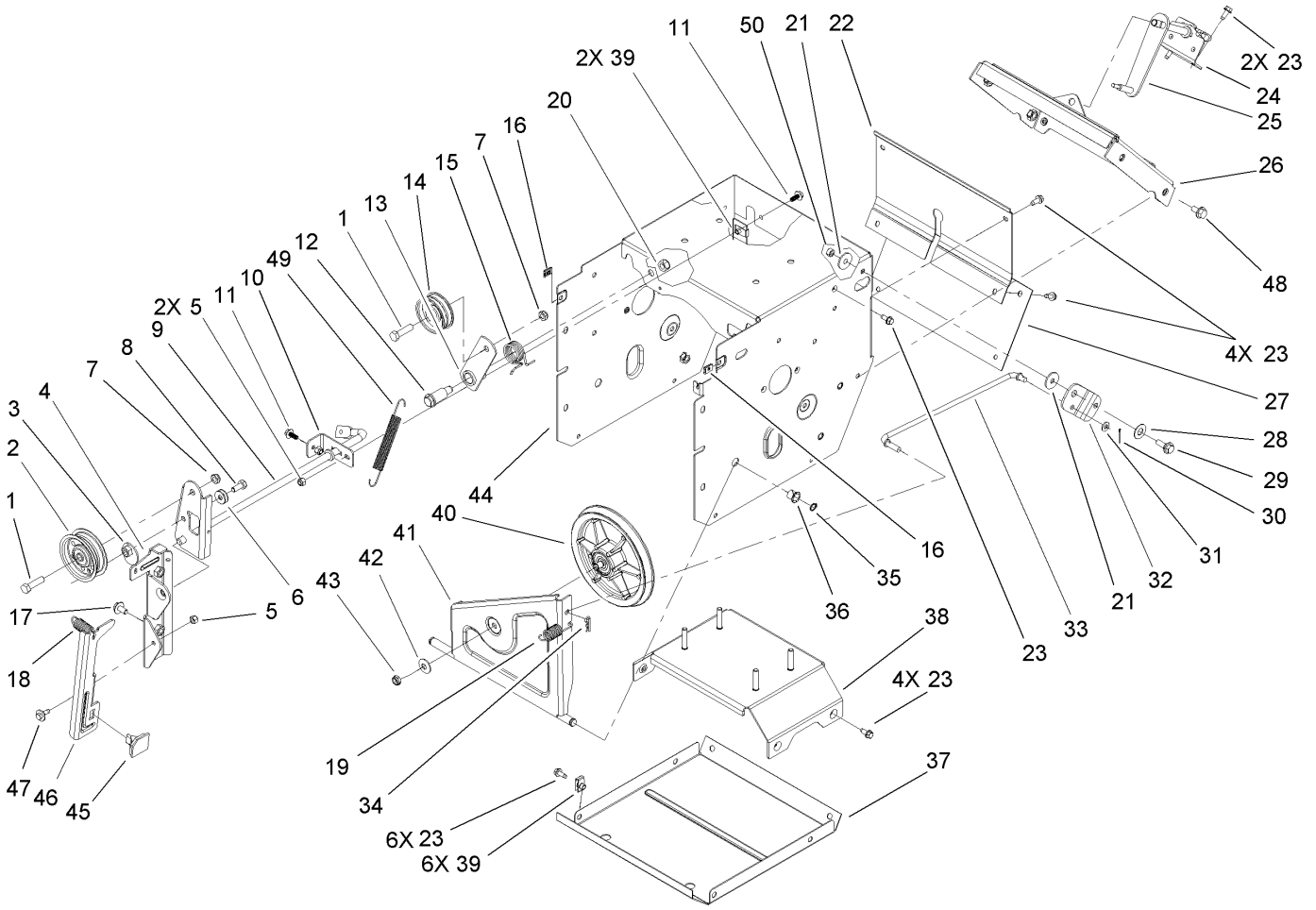

Frame Assembly

Ref	Part No.	Qty.	Description
1	323-8	2	Screw-HH
2	92-7104	1	Pulley-Idler
3	107-1047	1	Nut ASM
4	107-1039	1	Bracket-Idler, Impeller
5	3296-42	3	Nut-Lock, NI
6	3290-456	1	Washer-Belleville
7	3296-59	2	Nut-Lock, NI
8	322-3	1	Screw-HH
9	106-7339-03	1	Auger Clutch ASM
10	106-7341	1	Bracket-Clutch Rear
11	99-6810	2	Screw-HH
12	107-1022	1	Bolt-Shoulder
13	106-7312	1	Arm-Idler, Traction
14	3-4244	1	Pulley-Idler
15	93-4816	1	Spring-Torsion, RH
16	107-1013	2	Nut-Speed, U-Type
17	3234-7	2	Screw-HHF
18	107-1045	1	Spring-Extension
19	107-1003	1	Spring-Extension
20	3296-76	1	Nut-Lock, NI
21	5-4460	2	Washer-Pivot
22	106-4556-01	1	Cover-Upper
23	32144-10	17	Screw-HWH
24	106-7325	1	Bracket-Shift Rod

Ref	Part No.	Qty.	Description
25	106-7268	1	Lever-Control, Traction
26	106-7342-01	1	Shift Plate ASM
27	106-7345-01	1	Cover-Lower
28	25-5640	1	Washer
29	27-0410	1	Screw-Shoulder
30	3272-4	1	Pin-Cotter
31	3256-23	1	Washer-Flat
32	107-1011	1	Bellcrank-Drive
33	106-4467	1	Link-Control, Speed
34	3290-307	1	Pin-Hair
35	32151-61	2	Ring-Retaining
36	256-257	2	Bushing-Nyliner
37	106-7330-01	1	Pan-Bottom
38	106-7315	1	Brace Frame ASM
39	107069	8	Clip
40	106-4500	1	Pulley-Traction
41	106-7274	1	Pulley Pivot ASM
42	3290-340	1	Washer-Belleville
43	3296-5	1	Nut-Lock, NI
44	106-4495-01	1	Frame-Traction
45	66-8060	1	Pad-Brake
46	107-1000	1	Arm-Brake
47	92-9698	1	Screw-Shoulder
48	32144-14	4	Screw-HWH

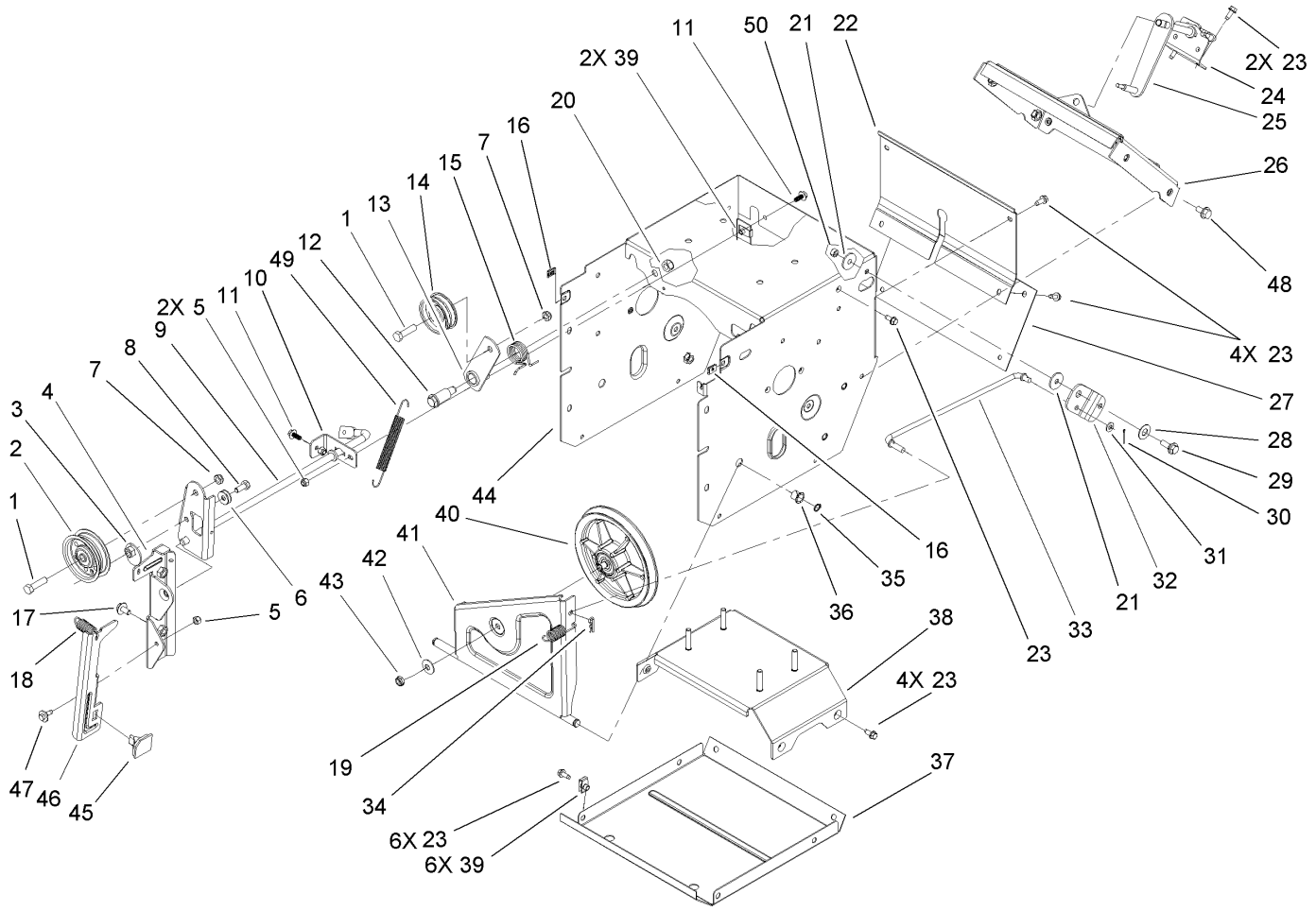

Frame Assembly (continued)

Ref	Part No.	Qty.	Description
49	107-3828	1	Spring-Extension
50	3296-29	1	Nut-Lock, NI

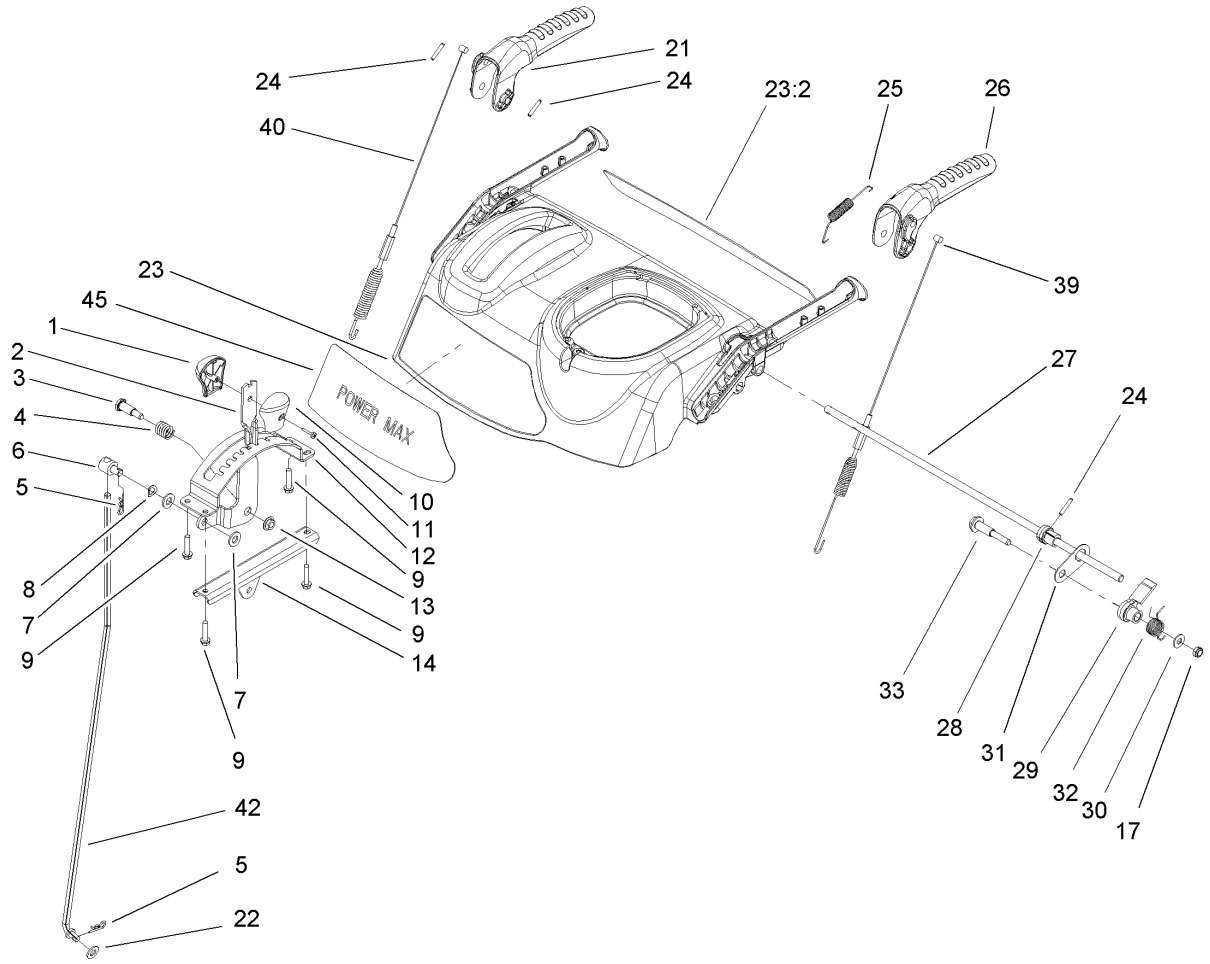

Handle and Control Assembly

Ref	Part No.	Qty.	Description
1	106-4423	1	Knob-Shift, RH
2	106-7278-03	1	Selector-Speed
3	63-2650	1	Screw-Shoulder
4	107-3017	1	Spring-Compression
5	3290-307	2	Pin-Hair
6	101161	1	Trunnion
7	3256-24	2	Washer-Flat
8	612586	1	Washer-Spring
9	46-8092	4	Screw-Plastite
10	105-9999	1	Knob-Shift, LH
11	94-4496	1	Screw-PPH
12	106-7277-03	1	Guide-Selector, Speed
13	32128-13	1	Nut-HF
14	106-7279-03	1	Mount-Selector, Speed
17	3296-72	1	Nut-Lock, NI
21	106-4413	1	Lever-Auger
22	3256-38	1	Washer-Flat
23	107-3826	1	Control Panel ASM
23:2	106-4523	1	Decal-Control Panel Back
24	32121-125	3	Pin-Spring
25	107-3001	1	Spring-Tension
26	106-4410	1	Lever-Traction
27	105-9996	1	Rod-Lockout
28	107-1043	1	Cam-Lockout

Ref	Part No.	Qty.	Description
29	107-1044	1	Latch-Lockout
30	98-3499	1	Washer-Flat
31	107-3000	1	Link-Lockout
32	105-9998	1	Spring-Torsion
33	106-4412	1	Screw-Shoulder
39	106-4563	1	Cable-Traction
40	106-4599	1	Cable-Auger
42	107-1005	1	Rod-Shift
45	106-4518	1	Decal

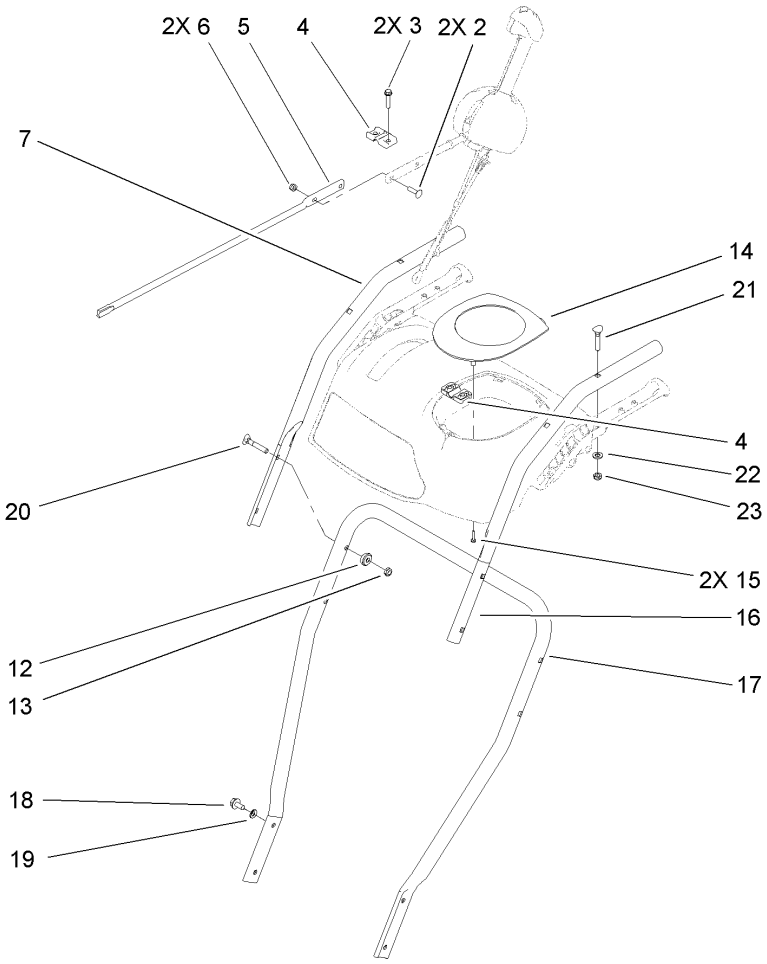

Handle and Control Assembly No. 2

Ref	Part No.	Qty.	Description
2	3229-30	2	Screw-CARR
3	46-8092	2	Screw-Plastite
4	105-9987	2	Support-Rod
5	106-7283	1	Rod-Chute, Front
6	3296-73	2	Nut-Lock, NI
7	105-9994-03	1	Handle-Upper, RH
12	107-3844	4	Washer
13	3296-72	4	Nut-Lock, NI
14	106-4586	1	Cover-Panel, Control
15	94-4496	2	Screw-PPH
16	105-9993-03	1	Handle-Upper, LH
17	105-9981-03	1	Handle-Lower
18	32144-14	4	Screw-HWH
19	3290-475	4	Washer-Belleville
20	92-2260	4	Screw-Handle
21	107-3018	4	Screw-Handle
22	3256-70	4	Washer-Flat
23	3296-72	4	Nut-Lock, NI

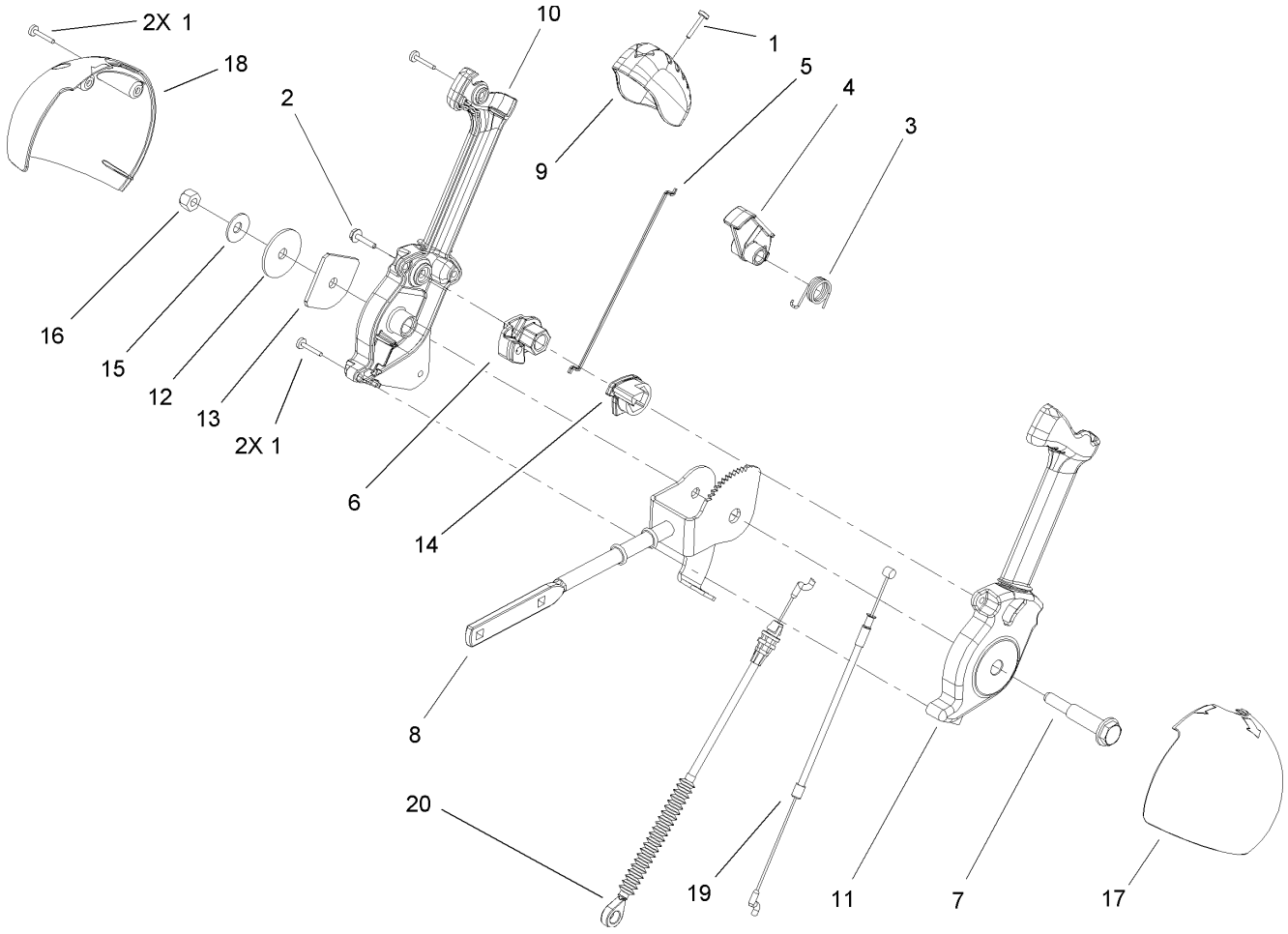

Chute Control Assembly

Ref	Part No.	Qty.	Description
1	94-4496	5	Screw-PPH
2	98-1375	1	Screw-HWH
3	105-9982	1	Spring-Torsion
4	105-9984	1	Trigger-Latch
5	105-9985	1	Link-Latch
6	105-9988	1	Lever-Cable, Deflector
7	105-9995	1	Screw-Shoulder
8	106-4479	1	Rod-Control, Chute
9	106-7280	1	Cap-Lever
10	106-7281	1	Lever-Chute Control, RH
11	106-7282	1	Lever-Chute Control, LH
12	107-3002	1	Washer-Nylon
13	106-7295	1	Plate-Friction
14	106-7310	1	Pawl-Latch
15	3290-456	1	Washer-Belleville
16	3296-29	1	Nut-Lock, NI
17	105-9986	1	Cover-Chute Lever, LH
18	106-7292	1	Cover-Chute Lever, RH
19	105-9989	1	Cable-Chute Release
20	105-9990	1	Cable-Control, Deflector

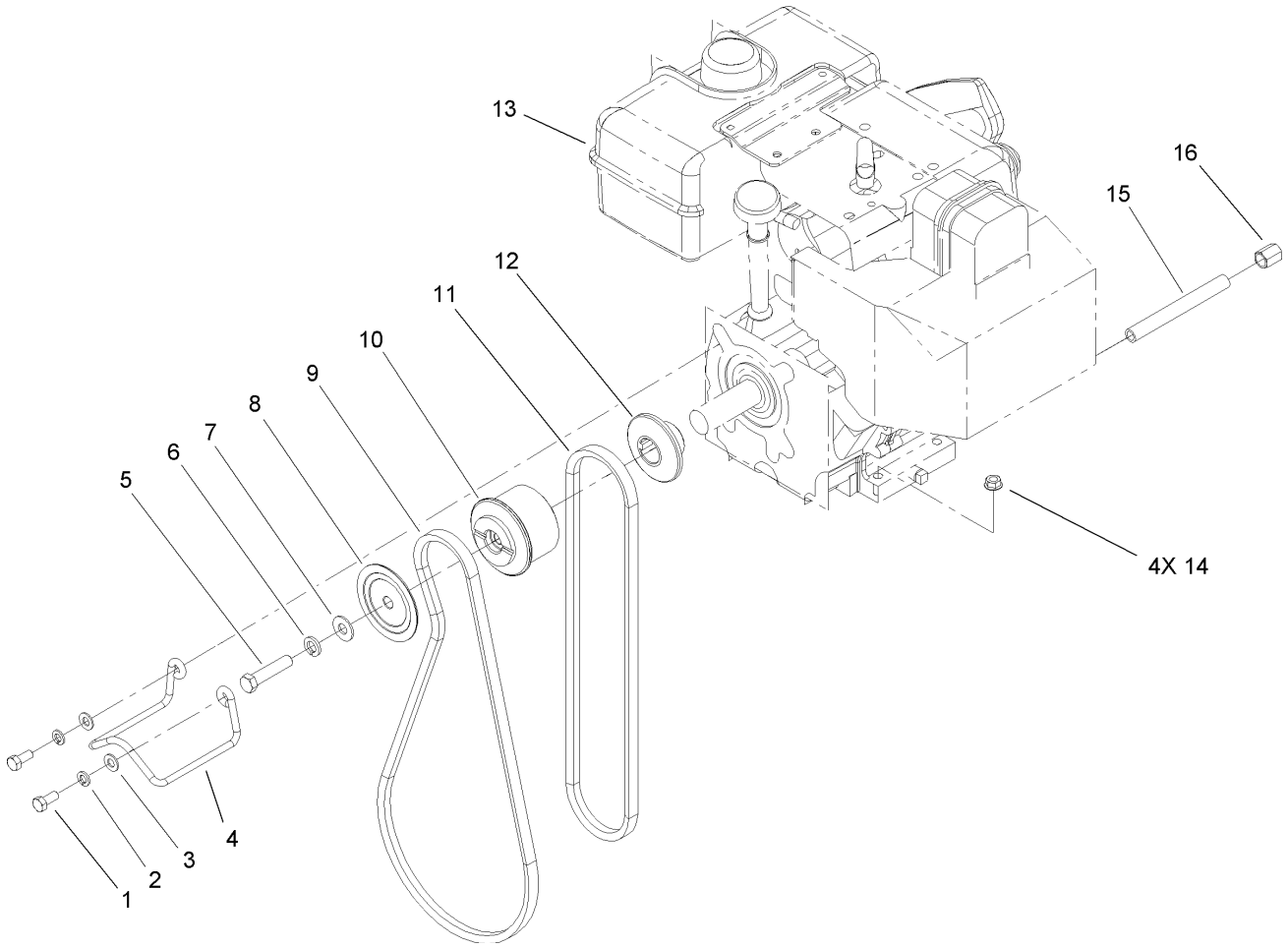

Engine Assembly

Ref	Part No.	Qty.	Description
1	3210-3	2	Screw-HH
2	3253-4	2	Washer-Lock
3	3256-23	2	Washer-Flat
4	107-3835	1	Guide-Belt
5	3212-8	1	Screw-HH
6	3253-6	1	Washer-Lock
7	3256-4	1	Washer-Flat
8	62-0940	1	Sheave-Half, Impeller
9	106-4498	1	Belt-V
10	106-7333	1	Pulley-Engine, Center
11	94-8812	1	V-Belt, Traction
12	106-7334	1	Sheave-Half, Traction
❷13		1	Engine-Tecumseh, Hmsk-80 155724
14	32128-20	4	Nut-HF
15	289-34	1	Nipple-Pipe
16	288-2	1	Cap-Pipe

Obtain Parts From Tecumseh

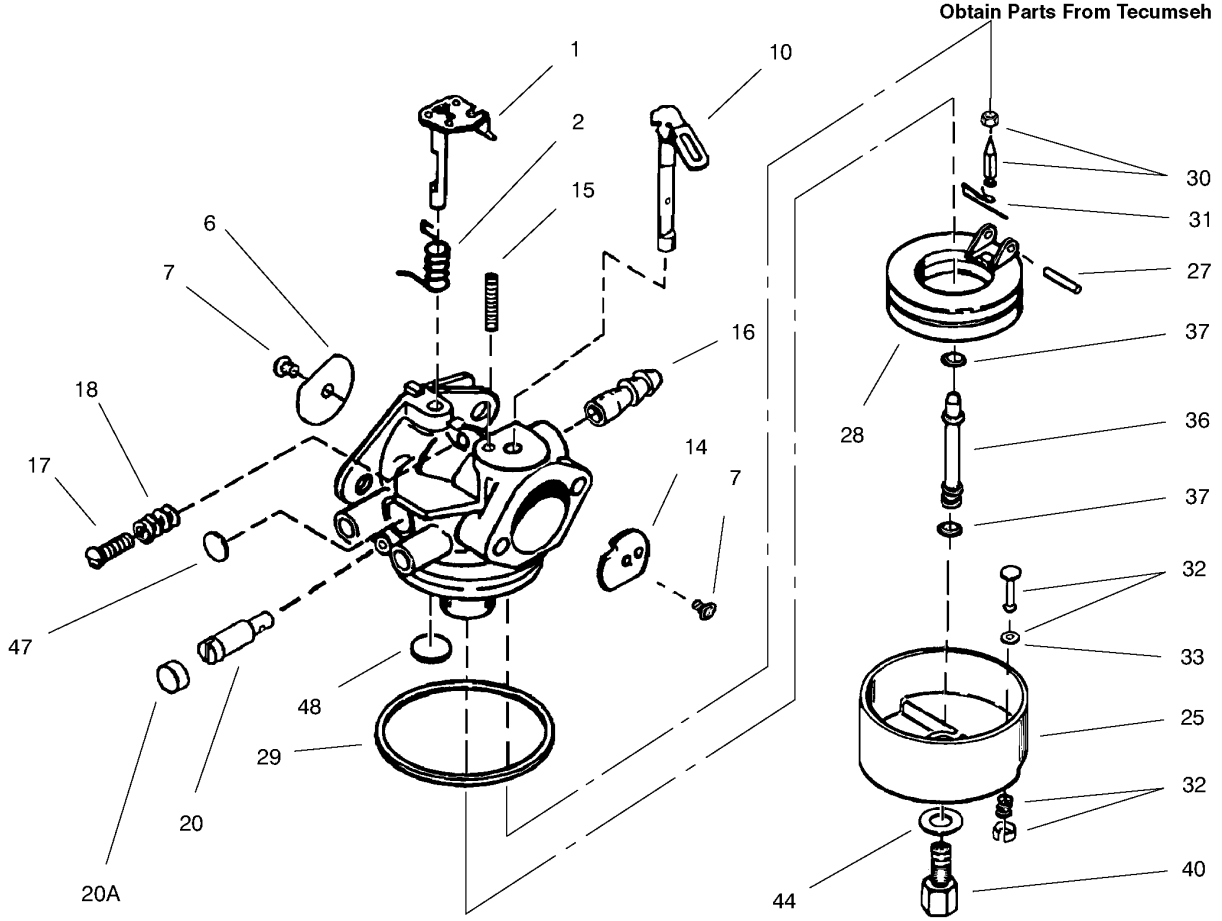

Carburetor Assembly No. 640052
Tecumseh HMSK-80 155724X

Ref	Part No.	Qty.	Description
❸1	631776A	1	Throttle Shaft And Lever ASM
❸2	631970	1	Spring-Throttle Return
❸6	631778	1	Shutter-Throttle
❸7	650506	2	Screw-Shutter
❸10	632112	1	Choke Shaft And Lever ASM
❸14	632174	1	Shutter-Choke
❸15	630735	1	Spring-Choke Positioning
❸16	632164	1	Fitting-Fuel
❸17	650417	1	Screw-Idle Speed
❸18	630766	1	Spring-Tension
❸20	640016	1	Screw-Idle Restrictor
❸20A	640053	1	Cap-Idle Restrictor Screw
❸25	631951	1	Float Bowl ASM
❸27	631024	1	Shaft-Float
❸28	632019	1	Float
❸29	631028	1	O-Ring, Float Bowl
❸30	631021	1	Inlet Needle, Seat And Clip ASM
❸31	631022	1	Clip-Spring
❸32	27136A	1	Bowl Drain ASM
❸33	27554	1	Gasket-Drain Plunger
❸36	640005	1	Tube-Main Nozzle
❸37	632547	2	O-Ring, Main Nozzle Tube
❸40	640055	1	Nut-High Speed, Bowl
❸44	27110	1	Gasket

Ref	Part No.	Qty.	Description
❸47	630748	1	Plug-Welch, Idle Mixture Well
❸48	631027	1	Plug-Welch, Vent

Engine Assembly No. 1
Tecumseh HMSK-80 155724X

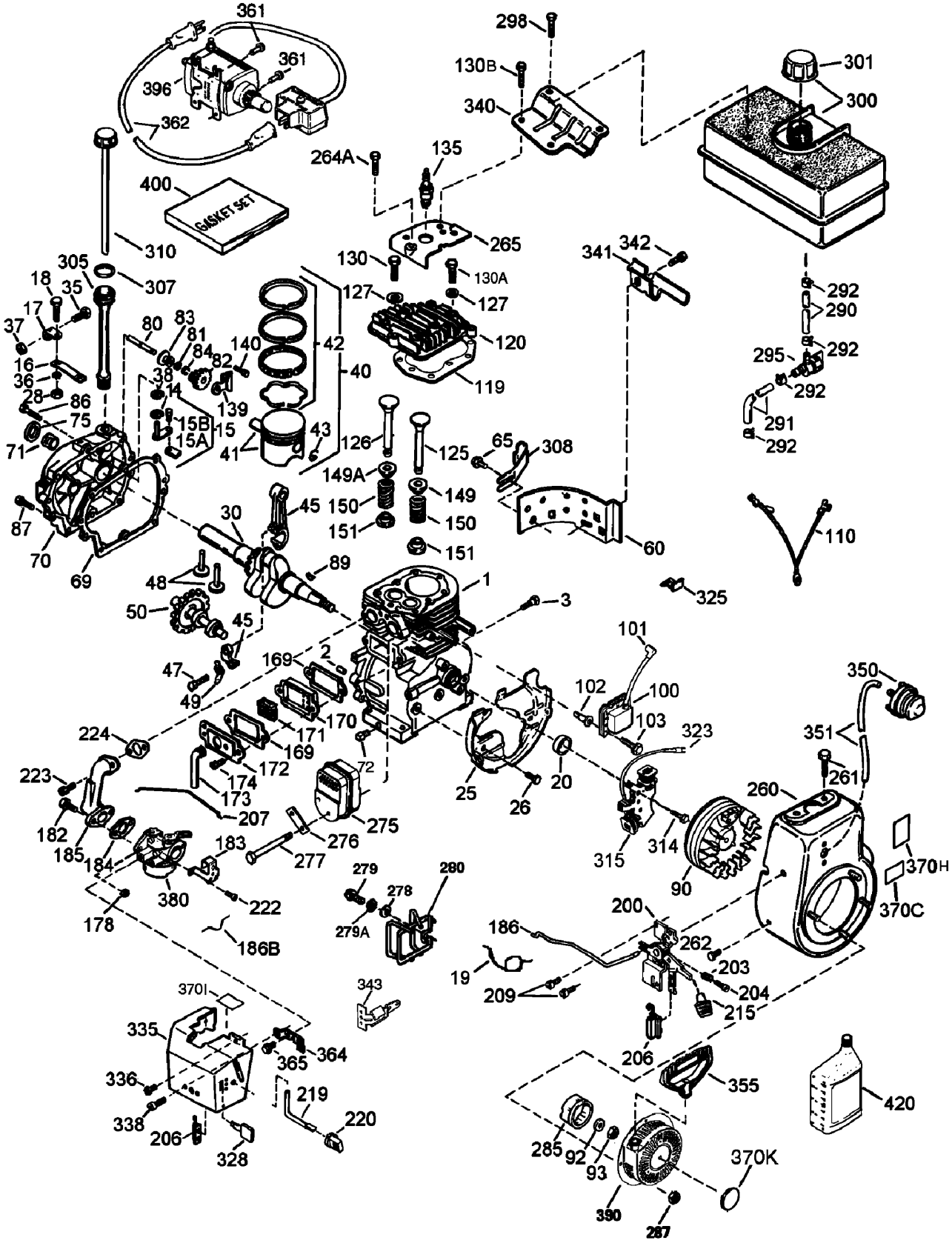

Engine Assembly No. 1
Tecumseh HMSK-80 155724X

Ref	Part No.	Qty.	Description
❸1	35385	1	Cylinder Asm. (Incl. Ref. # 2, 20 And 72)
❸2	27652	2	Pin-Dowel
❸3	650820	2	Screw, 1/4-20 X 1/2"
❸14	28277	1	Washer
❸15	30699C	1	Governor Rod (Incl. Ref. # 15a And 15b)
❸15A	30700	1	Yoke-Governor
❸15B	650494	1	Screw, 6-40 X 5/16"
❸16	33454A	1	Lever-Governor
❸17	29916	1	Clamp-Lever, Governor
❸18	651028	1	Screw-Torx, T-15 (8-32 X 3/8")
❸19	34663	1	Spring-Throttle
❸20	35319	1	Seal-Oil
❸25	36460	1	Baffle-Blower Housing
❸26	650561	2	Screw, 1/4-20 X 5/8"
❸28	30322	1	Nut-Lock, 10-32
❸30	35571A	1	Crankshaft
❸35	29826	1	Screw, 10-32 X 3/4"
❸36	29918	1	Washer-Lock
❸37	29216	1	Nut-Lock, 10-32
❸38	29642	1	Ring-Retaining
❸40	40011	1	Piston, Pin And Ring Set (Std.)
❸40	40012	1	Piston, Pin And Ring Set (.010" Os)
❸41	40009	1	Piston And Pin Asm. (Std.) (Incl. Ref. #43)
❸41	40010	1	Piston And Pin Asm. (.010" Os) (Incl. Ref. #43)
❸42	40013	1	Ring Set (Std.)
❸42	40014	1	Ring Set (.010" Os)
❸43	27888	2	Ring-Retaining, Piston Pin
❸45	36897	1	Connecting Rod Asm. (Incl. Ref. # 47 And 49)
❸47	651033	2	Bolt-Rod, Connecting
❸48	34034	2	Lifter-Valve
❸49	36896	1	Dipper-Oil
❸50	35375	1	Camshaft (Mcr)
❸60	33273A	1	Extension-Blower Housing
❸65	650128	1	Screw, 10-24 X 1/2"
❸69	37342	1	Gasket-Cover, Cylinder
❸70	35376A	1	Cylinder Cover (Incl. Ref. # 71,75,80-84)
❸71	35377	1	Bushing-Crankshaft
❸72	27642	1	Plug-Oil Drain
❸75	35319	1	Seal-Oil
❸80	37587	1	Shaft-Governor
❸81	651080	1	Washer
❸82	37588	1	Governor Gear Asm. (Incl. Ref. # 81)
❸83	30588A	1	Spool-Governor

Ref	Part No.	Qty.	Description
❸84	29193	1	Ring-Retaining
❸86	650833	7	Screw, 1/4-20 X 1-3/16"
❸87	650832	1	Screw, 1/4-20 X 1-11/16"
❸89	32589	1	Key-Flywheel
❸90	611093	1	Flywheel ASM (W/ring Gear)
❸92	650880	1	Washer-Lock
❸93	650881	1	Nut-Flywheel
❸100	35135A	1	Solid State Ignition (Incl. Ref. # 101)
❸101	610118	1	Cover-Spark Plug
❸102	651024	2	Stud-Mounting, Solid State
❸103	651007	2	Screw-Torx, T-15 (10-24 X 15/16")
❸110	35187	1	Wire-Ground
❶❸110A	37047	1	Wire-Ground
❸119	36448	1	Gasket-Head, Cylinder
❸120	36449	1	Cylinder Head ASM
❸125	27878A	1	Exhaust Valve (Std.) (Incl. Ref. # 151)
❸125	27880A	1	Exhaust Valve (1/32" Os) (Incl. Ref. #151)
❸126	34035	1	Intake Valve (Std.) (Incl. Ref. # 151)
❸127	650691	2	Washer
❸130	6021A	7	Screw, 5/16-18 X 1-7/16"
❸130A	650727	2	Screw, 5/16-18 X 1-25/32"
❸130B	651055	2	Screw, 5/16-18 X 39/64"
❸135	35395	1	Spark Plug (Rn4c)
❸139	33369	1	Bracket-Gear, Governor
❸140	650836	2	Screw, 10-24 X 1/2"
❸149	27882	1	Cap-Valve Spring
❸149A	35862	1	Cap-Valve Spring
❸150	27881	2	Spring-Valve
❸151	32581	2	Keeper-Spring, Valve
❸❹169	27896A	2	Gasket-Cover, Valve
❸170	28423	1	Body-Breather
❸171	28424	1	Element-Breather
❸172	28425	1	Cover-Valve
❸173	35350	1	Tube-Breather
❸174	650128	2	Screw, 10-24 X 1/2"
❸178	29752	2	Nut And Lockwasher ASM
❸182	30088A	2	Screw-Torx, T-30 (1/4-20 X 27/32")
❸183	34587A	1	Bracket-Choke
❸❹184	33263	1	Gasket-Carburetor To Intake Pipe
❸185	33877	1	Pipe-Intake
❸186	34667	1	Link-Governor
❸186B	36652	1	Spring-Choke
❸200	34677	1	Control Bracket (Incl. Ref. # 19, 203, 204 And 206)

Engine Assembly No. 2
Tecumseh HMSK-80 155724X

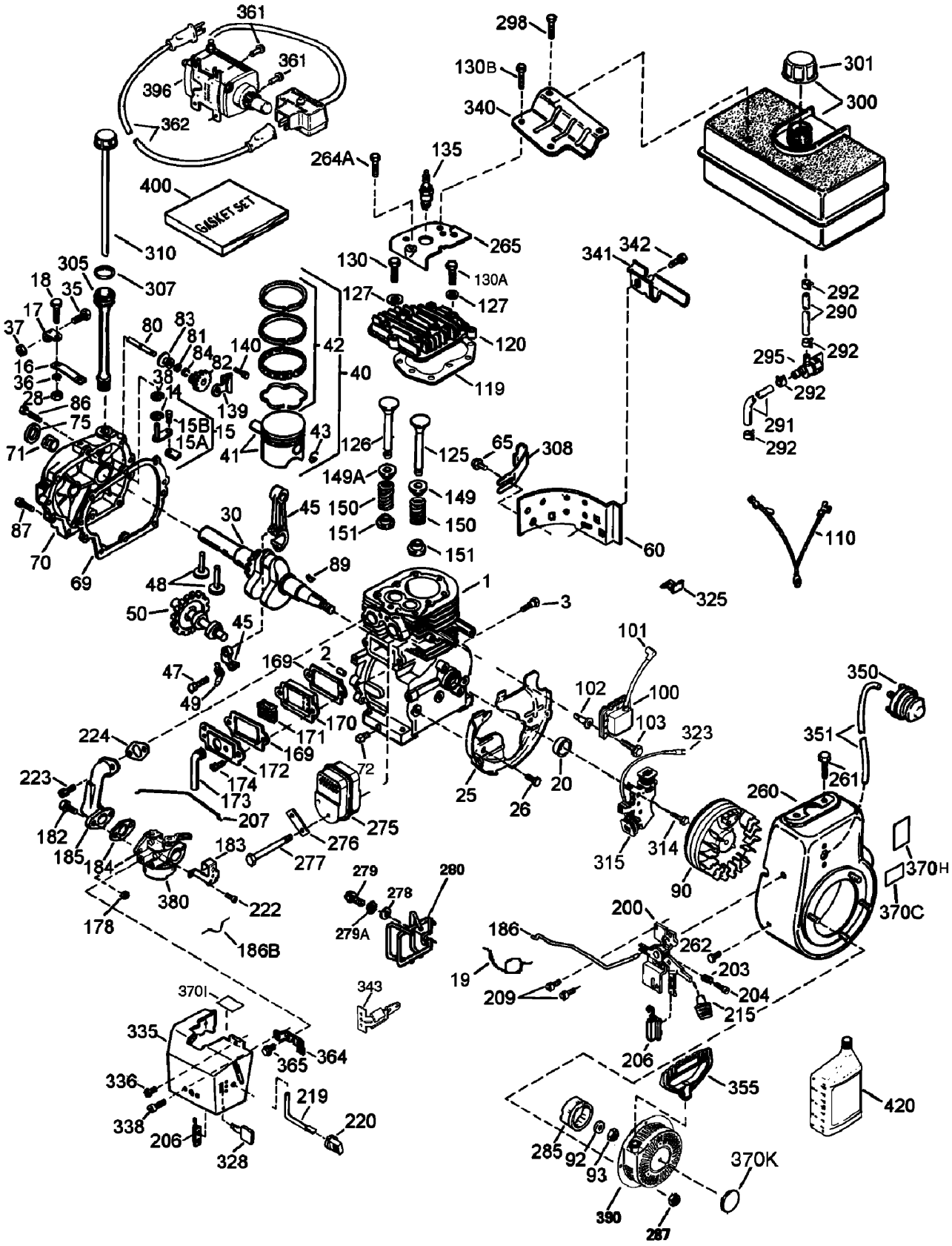

Engine Assembly No. 2
Tecumseh HMSK-80 155724X

Ref	Part No.	Qty.	Description
❸203	31342	1	Spring-Compression
❸204	651029	1	Screw-Torx, 5-40 X 7/16"
❸206	610973	1	Terminal
❸207	33878	1	Link-Throttle
❸209	650821	2	Screw
❸215	35440	1	Knob-Control
❸219	34586	1	Rod-Choke
❸220	35438	1	Knob-Choke
❸222	28820	2	Screw, 10-32 X 1/2"
❸223	650378	2	Screw-Torx, T-30 (5/16-18 X 1-1'8")
❸224	27915A	1	Gasket-Intake Pipe
❸260	35447A	1	Housing-Blower
❸261	650788	2	Screw, 1/4-20 X 3/4"
❸262	29747B	2	Screw
❸264A	650802	1	Screw-Torx, T-30 (1/4-20 X 1/2")
❸265	33272D	1	Cover-Cylinder Head
❸275	35056	1	Muffler
❸276	31588	1	Plate-Locking
❸277	651002	2	Screw, 5/16-18 X 4-3/16"
❸278	650147	2	Washer-Flat
❸279	650980	2	Screw, 10-16 X 47/64"
❸279A	650979	2	Lockwasher
❸280	36294	1	Muffler Heat Shield ASM
❸285	35985B	1	Cup-Starter
❸287	29752	4	Nut And Lockwasher ASM
❸290	29774	1	Line-Fuel
❸291	30962	1	Line-Fuel
❸292	26460	4	Clamp-Fuel Line
❸295	35857	1	Fuel Shut-Off Valve ASM (Incl. Ref. # 292)
❸298	650665	2	Screw, 1/4-15 X 3/4"
❸300	34156A	1	Fuel Tank (Incl. Ref. # 292 And 301)
❸301	36246	1	Cap-Fuel
❸305	35554	1	Tube-Oil Fill
❸307	35499	1	O-Ring
❸308	35540	1	Clip-Fill Tube
❸310	36205	1	Gage Oil ASM
❸314	650873	1	Screw, 1/4-20 X 3/4"
❸315	611111	1	Alternator Coil ASM (18 Watt)(Incl. Ref. #322)
❸323	611118	1	Terminal
❸325	29443	1	Clip-Wire
❸328	35062	2	Keys-Ignition
❶❸329	610973	1	Terminal
❸335	36547	1	Cover-Carburetor
❸336	650765	1	Screw, 10-32 X 1/2"
❸338	28942	2	Screw, 10-32 X 3/8"
❸340	34154	1	Bracket-Fuel Tank

Ref	Part No.	Qty.	Description
❸341	34155	1	Bracket-Fuel Tank
❸342	650561	1	Screw, 1/4-20 X 5/8"
❸343	35079A	1	Key Switch Bracket (Incl. Ref. #343a)
❶❸343A	651060	1	Screw, 10-32 X 23/64"
❸350	570682A	1	Primer ASM
❸351	32180C	1	Line-Primer
❸355	590574	1	Handle-Grip, Mitten
❸361	650990	2	Screw-Torx, T-30 (1/4-20 X 15/32")
❸364	33377	1	Bracket-Carburetor
❸365	650767	2	Screw, 8-32 X 27/64"
❸370C	36501	1	Decal-Primer
❸370H	35077	1	Decal-Instruction
❸370I	37119	1	Decal-Warning
❸370K	36695	1	Decal-Starter
❶❸371D	36534	1	Decal-Caution
❸380	640052	1	Carburetor (Incl. Ref. #184)
❸390	590749	1	Rewind Starter ASM
❸396	37102	1	Electric Motor ASM (220 Volt)
❸400	36450C	1	Gasket Set
❸420	730226A	1	Sae 5w30 4-Cycle Engine Oil (Quart)

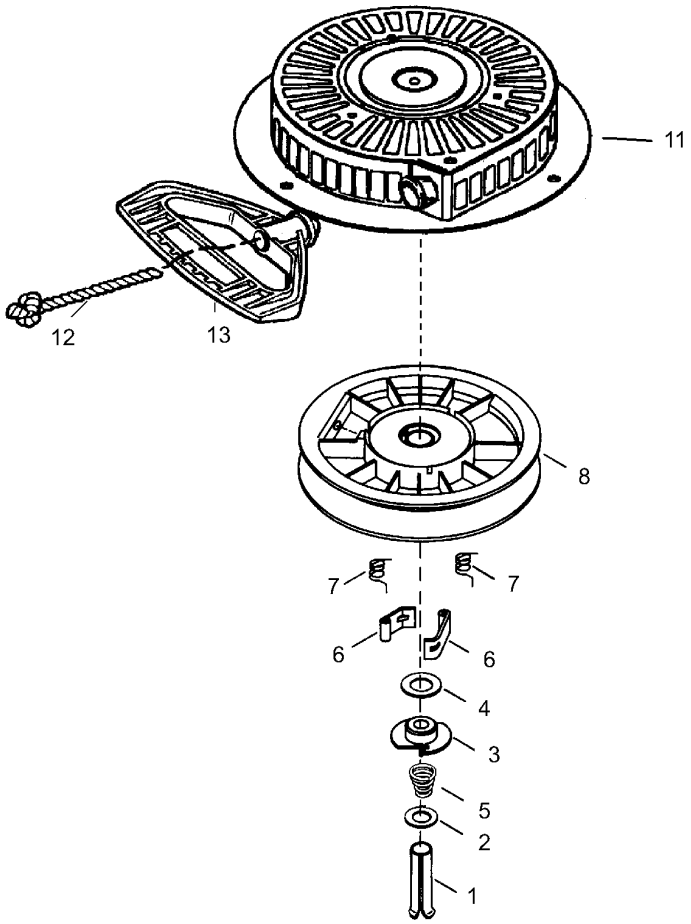

Rewind Starter Assembly No. 590749
Tecumseh HMSK-80 155724X

Ref	Part No.	Qty.	Description
❸1	590599A	1	Pin-Spring
❸2	590600	1	Washer
❸3	590679	1	Retainer
❸4	590601	1	Washer
❸5	590678	1	Spring-Brake
❸6	590680	2	Dog-Starter
❸7	590412	2	Spring-Dog
❸8	590682	1	Pulley And Rewind Spring ASM
❸11	590750A	1	Starter Housing ASM
❸12	590535	1	Rope-Starter (Length 98" X 9/64" Dia)
❸13	590574	1	Handle-Grip, Mitten

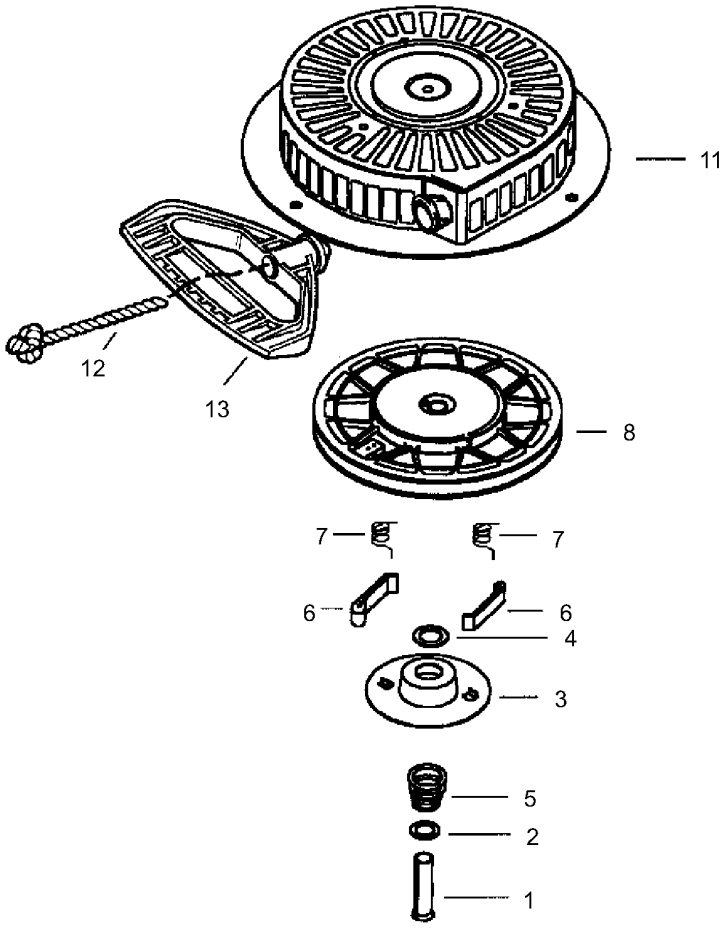

Rewind Starter Assembly No. 590733 (Optional)
Tecumseh HMSK-80 155724X

Ref	Part No.	Qty.	Description
❸1	590599A	1	Pin-Spring
❸2	590600	1	Washer
❸3	590696	1	Retainer
❸4	590601	1	Washer
❸5	590697	1	Spring-Brake
❸6	590698	2	Dog-Starter
❸7	590699	2	Spring-Dog
❸8	590709	1	Pulley And Rewind Spring ASM
❸11	590734A	1	Starter Housing ASM
❸12	590535	1	Rope-Starter (Length 98" X 9/64" Dia)
❸13	590574	1	Handle-Grip, Mitten

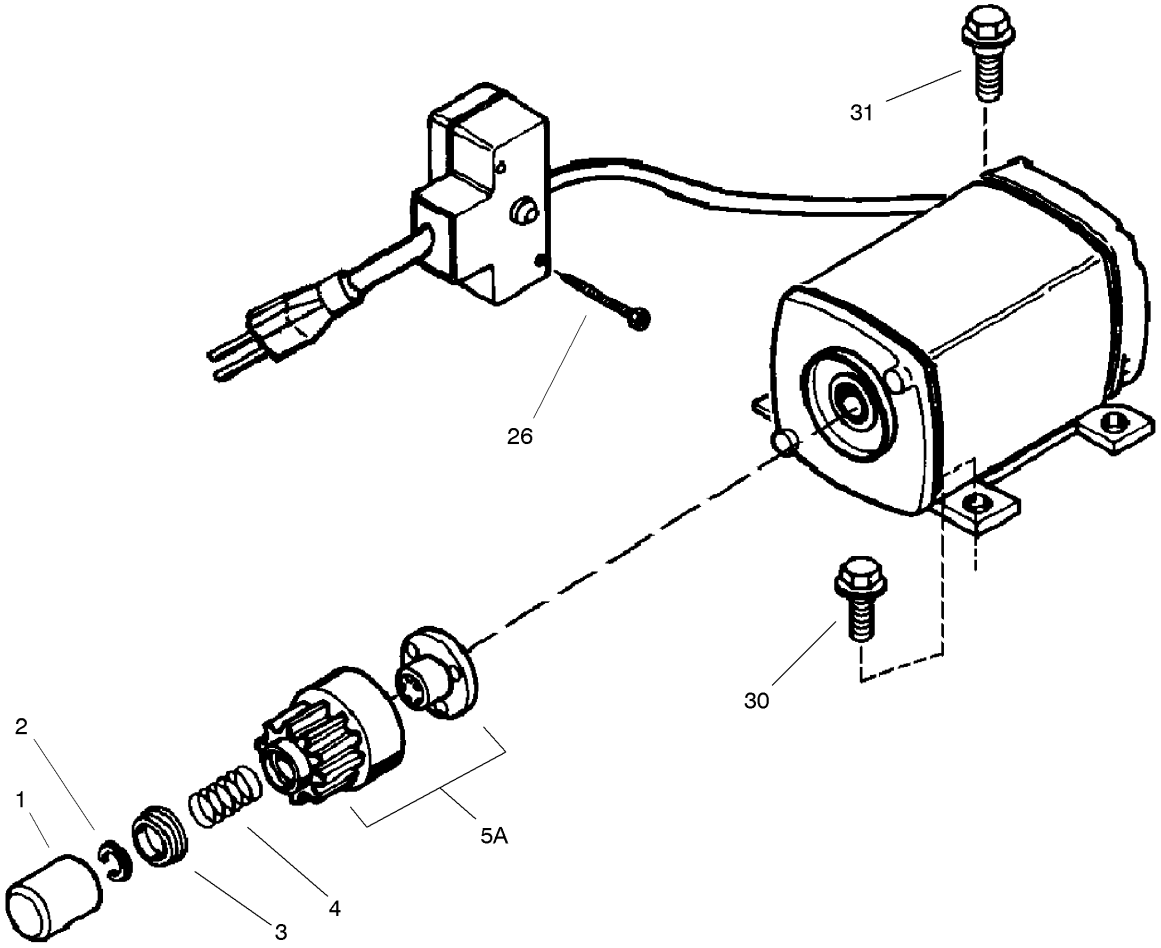

220 Volt Electric Starter Assembly No. 37102
Tecumseh HMSK-80 155724X

Ref	Part No.	Qty.	Description
1	33451	1	Cover-Dust
2	33842	1	Ring-Retainer
3	33430	1	Retainer-Spring
4	33431	1	Spring-Anti-Drift
5A	37050	1	Gear & Nut (Incl. 2)
26	650819	2	Screw
26	651032	2	Screw, 12-16 X 5/8"
30	30063	2	Screw-Torx, T-30 (1/4-20 X 1/2")
31	650820	2	Screw, 1/4-20 X 1/2"

NOTES

NOTES

NOTES


TORO®