FORM NO. 3312-242

TORO®

MODEL NO. 38120 — 4000001 & UP

**PARTS CATALOG**

# TORO S-200

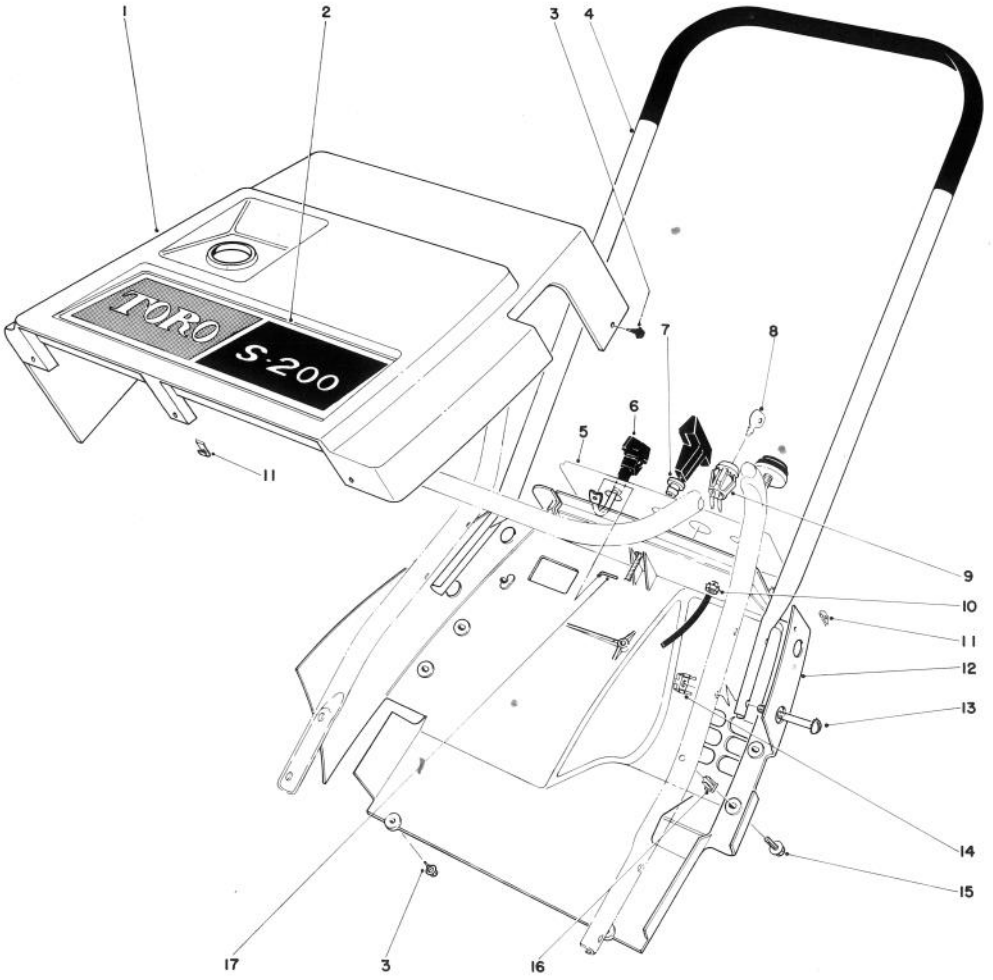


## SHROUD & HANDLE ASSEMBLY

| Ref. No. | Part No. | Description | No. Used |
|---|---|---|---|
| 1 | 39-0890 | Upper Shroud | 1 |
| 2 | 39-3290 | Decal — Toro | 1 |
| 3 | 32104-76 | Self Tapping Screw | 4 |
| 4 | 23-4260 | Upper Handle | 1 |
| 5 | 42-2180 | Decal — Control Panel | 1 |
| 6 | 39-0560 | Control Assembly — Choke | 1 |
| 7 | 23-7470 | Guide — Starter Rope | 1 |
| 8 | 33-2010 | Key | 2 |
| 9 | 40-5940 | Switch | 1 |

| Ref. No. | Part No. | Description | No. Used |
|---|---|---|---|
| 10 | 32149-2 | Locknut | 1 |
| 11 | 49-1490 | Nut | 5 |
| 12 | 40-6630 | Lower Shroud | 1 |
| 13 | 32140-100 | Round Head Machine Screw | 4 |
| 14 | 3290-225 | Nut — Retained | 4 |
| 15 | 32144-34 | Self Tapping Screw | 3 |
| 16 | 3290-428 | Push Nut | 3 |
| 17 | 39-8180 | Control Wire | 1 |

COPYRIGHT © ALL RIGHTS RESERVED
The Toro Company — 1983
MINNEAPOLIS, MN 55420 — U.S.A.

PRICE $1.00

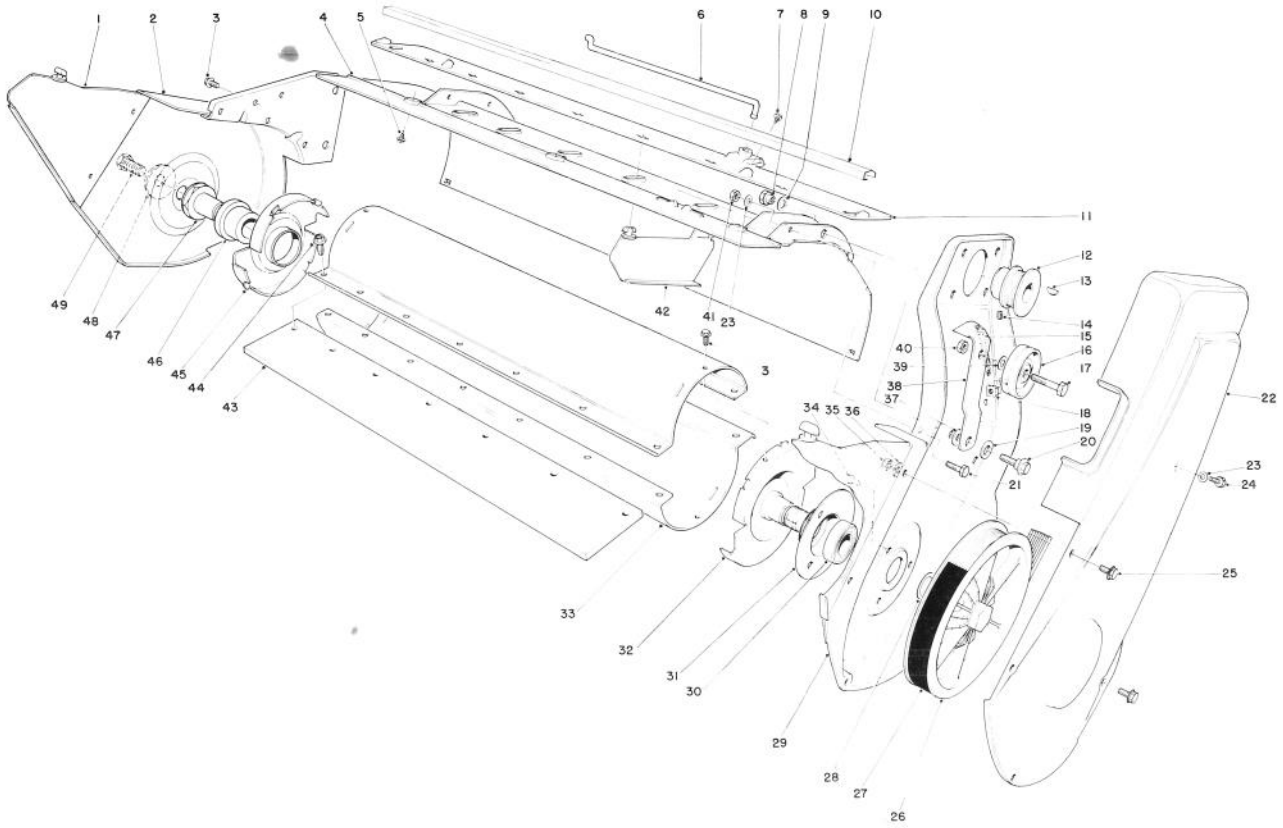

# LOWER MAIN FRAME ASSEMBLY

| Ref. No. | Part No. | Description | No. Used |
|---|---|---|---|
| 1 | 41-8130 | Vane – Outside | 2 |
| 2 | 39-1060 | Side Plate – Right | 1 |
| 3 | 12-3270 | Screw – Special | 6 |
| 4 | 41-8510 | Housing | 1 |
| 5 | 32144-34 | Self Tapping Screw | 3 |
| 6 | 25-5630 | Linkage – Vane Adjustment | 1 |
| 7 | 32104-77 | Self Tapping Screw | 2 |
| 8 | 17-7010 | Pivot Nut | 1 |
| 9 | 41-8440 | Washer | 1 |
| 10 | 42-1680 | Moulding – Warning | 1 |
| 11 | 41-8480 | Vane Mount | 1 |
| 12 | 25-6400 | Engine Pulley | 1 |
| 13 | 3257-3 | Woodruff Key | 1 |
| 14 | 3245-32 | Set Screw | 2 |
| 15 | 26-9730 | Idler Spring | 1 |
| 16 | 25-5880 | Idler Pulley | 1 |
| 17 | 323-9 | Capscrew | 1 |
| 18 | 3290-225 | Nut Retained | 1 |
| 19 | 25-5640 | Washer | 1 |
| 20 | 27-0410 | Shoulder Screw | 1 |
| 21 | 321-3 | Capscrew | 5 |

| Ref. No. | Part No. | Description | No. Used |
|---|---|---|---|
| 22 | 41-8180 | Drive Cover | 1 |
| 23 | 3256-22 | Washer | 6 |
| 24 | 3235-18 | Capscrew | 1 |
| 25 | 32105-2 | Machine Screw | 6 |
| 26 | 49-1530 | Rotor Pulley | 1 |
| 27 | 25-6430 | Belt | 1 |
| 28 | 26-0970 | Washer | 1 |
| 29 | 33-2130 | Side Plate – Left | 1 |
| 30 | 38-7820 | Ball Bearing | 1 |
| 31 | 38-8620 | Bearing Flange | 1 |
| 32 | 41-8150 | Drive Shaft & End Cap | 1 |
| 33 | 23-3190 | Shell – Rotor | 2 |
| 34 | 3292-8 | Rivet | 3 |
| 35 | 3296-2 | Locknut | 6 |
| 36 | 5-0774 | Washer Control Pivot | 4 |
| 37 | 5-4460 | Washer | 1 |
| 38 | 26-8990 | Idler Arm | 1 |
| 39 | 3256-24 | Washer | 1 |
| 40 | 3296-39 | Locknut | 1 |
| 41 | 32152-4 | Locknut | 5 |
| 42 | 39-1540 | Vane | 7 |

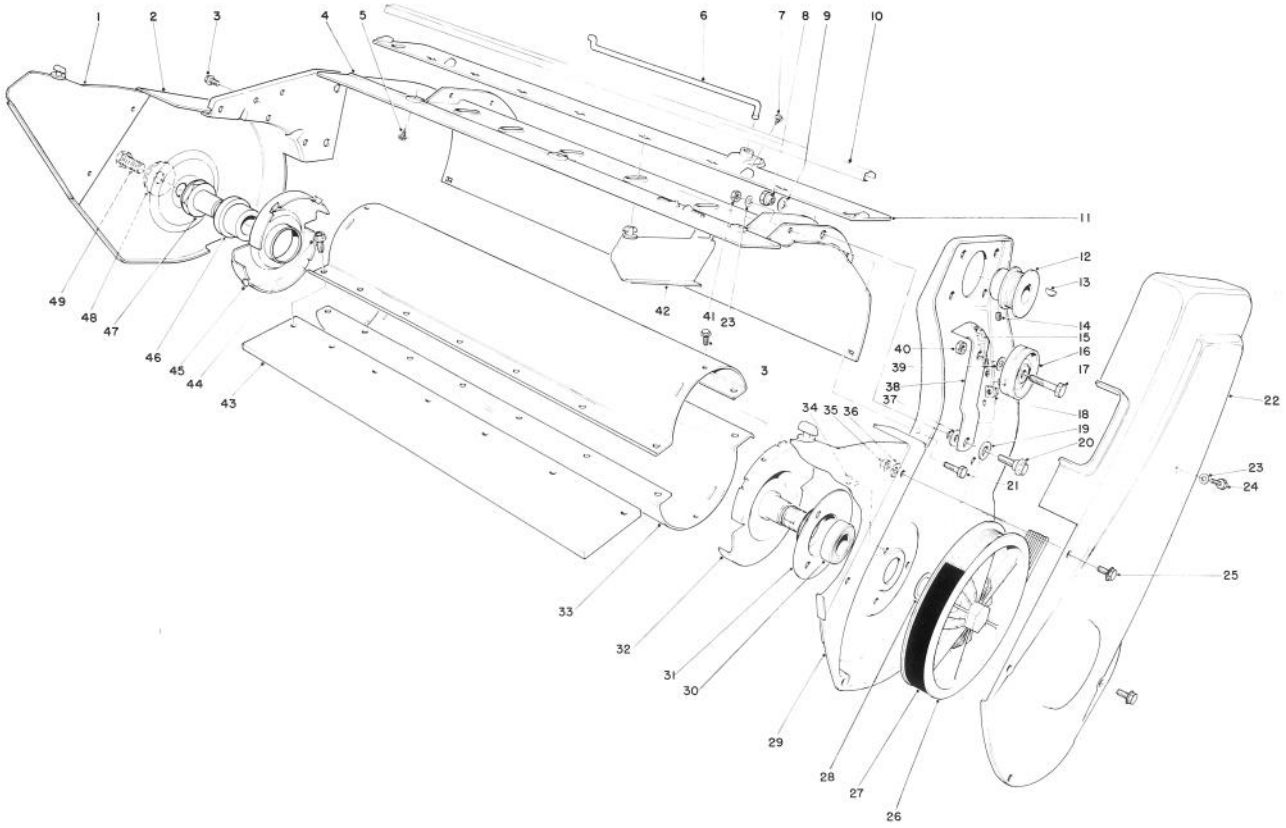

# LOWER MAIN FRAME ASSEMBLY (Continued)

| Ref. No. | Part No. | Description | No. Used |
|---|---|---|---|
| 43 | 23-3730 | Rotor Blade | 2 |
| 44 | 37-0370 | Screw | 14 |
| 45 | 39-1070 | End Cap Assembly – R.H. (Incl. Ref. #46) | 1 |

| Ref. No. | Part No. | Description | No. Used |
|---|---|---|---|
| 46 | 39-0790 | Bushing – Rotor | 1 |
| 47 | 39-0830 | Rotor Shaft | 1 |
| 48 | 3290-340 | Washer | 1 |
| 49 | 323-41 | Capscrew – Patch Lock | 1 |

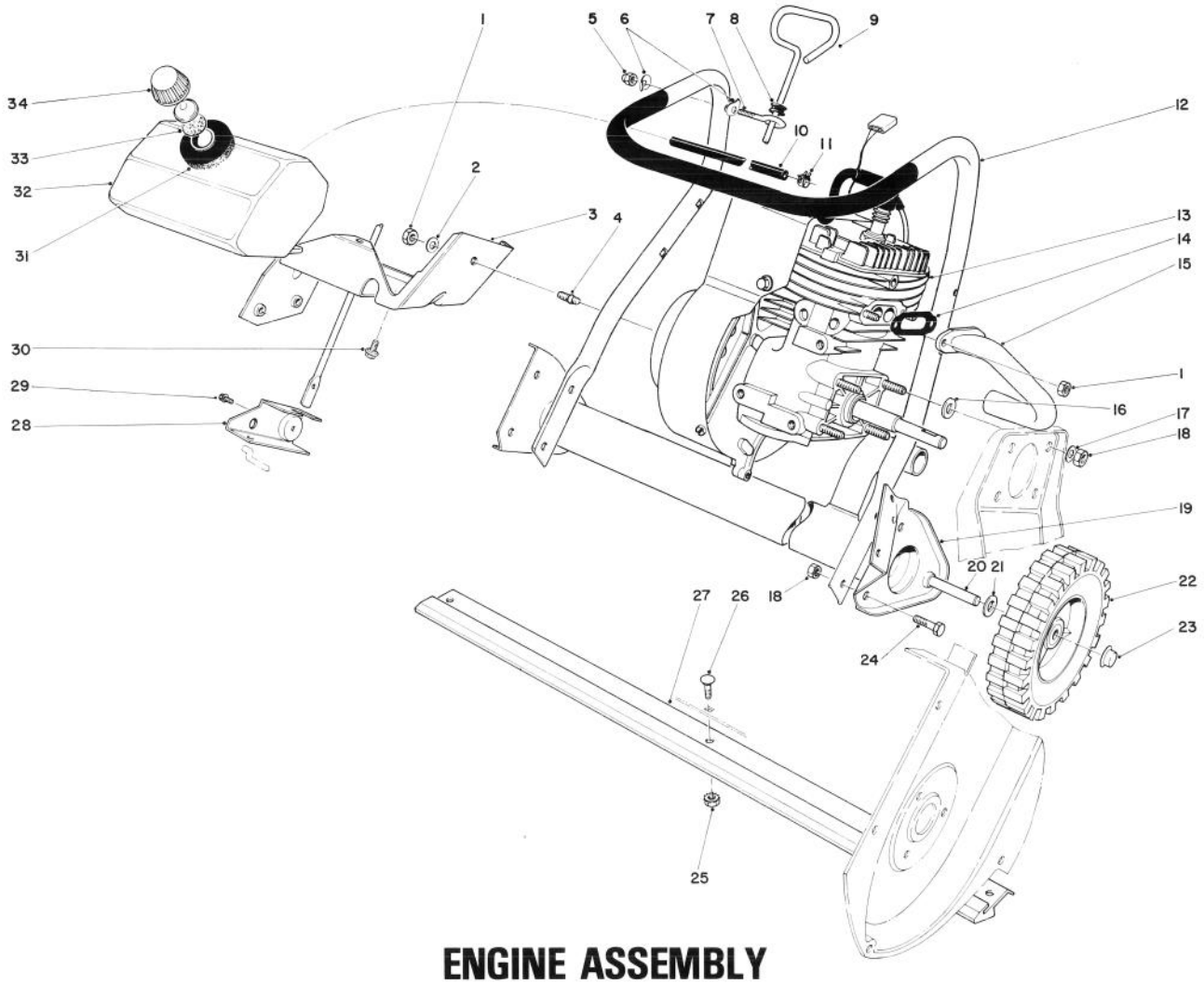


# ENGINE ASSEMBLY

| Ref. No. | Part No. | Description | No. Used |
|---|---|---|---|
| 1 | 32152-4 | Locknut | 3 |
| 2 | 7-3315 | Washer | 1 |
| 3 | 39-8890 | Rear Support – Engine | 1 |
| 4 | 38-8710 | Stud | 1 |
| 5 | 32111-7 | Cap Nut | 1 |
| 6 | 3-7501 | Washer | 2 |
| 7 | 3-9278 | Eye Bolt | 1 |
| 8 | 237-73 | Grommet | 1 |
| 9 | 39-0850 | Rod – Vane Adjustment | 1 |
| 10 | 49-2480 | Gas Line | 1 |
| 11 | 2412-86 | Clamp | 2 |
| 12 | 33-2120 | Lower Handle | 1 |
| 13 | 221-675 | Engine | 1 |
| * | 221-670 | Engine | 1 |
| 14 | 23-3810 | Gasket – Exhaust Pipe | 1 |
| 15 | 41-8240 | Exhaust Pipe | 1 |
| 16 | 4-2390 | Spacer | 4 |
| 17 | 3256-23 | Washer | 4 |
| 18 | 3296-29 | Locknut | 10 |

| Ref. No. | Part No. | Description | No. Used |
|---|---|---|---|
| 19 | 26-6550 | Muffler | 1 |
| 20 | 27-0060 | Axle | 1 |
| 21 | 3256-24 | Washer | 2 |
| 22 | 23-3250 | Wheel | 2 |
| 23 | 3290-320 | Retainer – Push On | 2 |
| 24 | 322-3 | Capscrew | 6 |
| 25 | 32149-2 | Locknut | 3 |
| 26 | 3229-1 | Carriage Bolt | 3 |
| 27 | 23-3170 | Scraper | 1 |
| 28 | 39-0840 | Bracket – Vane Adjustment | 1 |
| 29 | 12-5450 | Screw – Special | 1 |
| 30 | 12-3270 | Screw – Special | 3 |
| 31 | 25-1610 | Foam Pad | 1 |
| 32 | 39-8670 | Gas Tank | 1 |
| 33 | 20-4620 | Gasket | 1 |
| 34 | 42-0680 | Gas Cap (Incl. Ref. #33) | 1 |
| * | 8-7279 | Loose Parts | 1 |
| * | 25-9150 | Decal Replacement Serial Plate | 1 |

*Not Illustrated

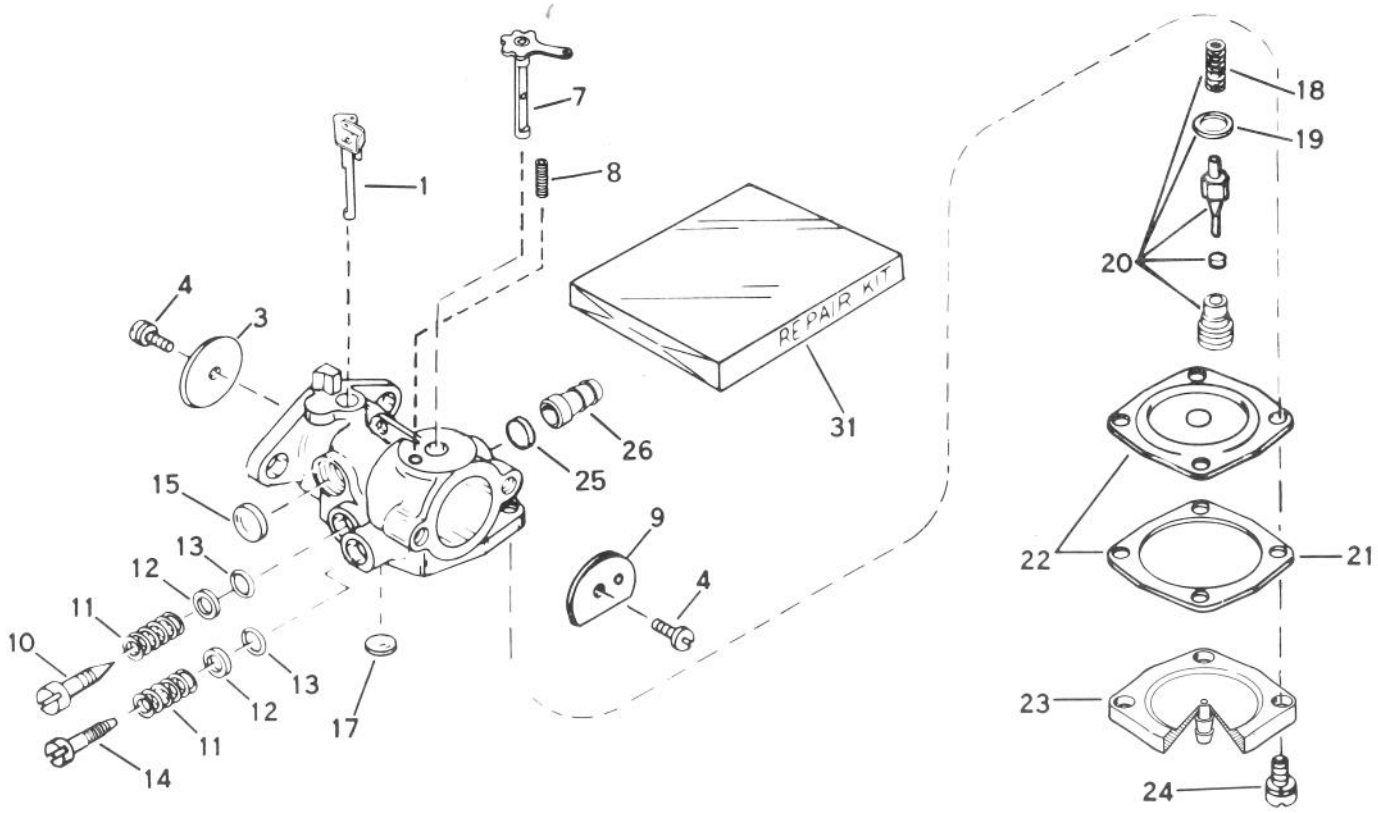


# CARBURETOR NO. 632142

**Engine Model No. AH520 Type 1602A**

# CARBURETOR NO. 632142A

**Engine Model No. AH520 Type 1603B**

| Ref. No. | Part No. | Description | No. Used |
|---|---|---|---|
| 1 | 632130 | Shaft & Lever Assy., Throttle | 1 |
| 3 | 631036 | Shutter, Throttle | 1 |
| 4 | 650506 | Screw, Throttle & Choke Shutter | 2 |
| 7 | 631888 | Shaft & Lever Assy., Choke | 1 |
| 8 | 630735 | Spring, Choke Positioning | 1 |
| 9 | 31837 | Shutter, Choke | 1 |
| 10 | 631562 | Screw, Idle Adjustment | 1 |
| 11 | 630738 | Spring, Adjustment Screw | 2 |
| 12 | 630739 | Washer, Adjustment Screw | 2 |
| 13 | †630740 | "O" Ring, Adjustment Screw | 2 |
| 14 | 630898 | Screw, Main Adjustment | 1 |
| 15 | †630748 | Plug, Welch | 1 |
| 17 | †630746 | Plug, Welch (used on type 1603B) | 1 |
| * | †640746 | Plug, Welch (used on type 1602A) | 1 |
| 18 | 631049 | Spring, Valve | 1 |
| 19 | 630742 | Gasket, Valve Seat | 1 |

| Ref. No. | Part No. | Description | No. Used |
|---|---|---|---|
| 20 | †630932A | Inlet Needle, Seat, Spring & Gasket Assy. (Incl. Ref. #18 & 19) | 1 |
| 21 | 630750 | Gasket, Diaphragm | 1 |
| 22 | †630978 | Diaphragm Assembly (Incl. Ref. #21) | 1 |
| 23 | 632127 | Cover, Diaphragm (used on type 1603B) | 1 |
| * | 631653 | Cover Assy., Diaphragm (used on type 1602A) | 1 |
| 24 | 650817 | Screw, Diaphragm Cover | 4 |
| 25 | 632163 | Disk (used on type 1603B) | 1 |
| * | 631201 | Valve Check (used on type 1602A) | 1 |
| 26 | 632164 | Fitting, Fuel Inlet (used on type 1603B) | 1 |
| * | 631803 | Fitting, Fuel Inlet (used on type 1602A) | 1 |
| 31 | 631893 | Repair Kit (Incl. items marked †) | 1 |

*Not Illustrated

# ENGINE ASSEMBLY

**Engine Tecumseh Model No. AH520 Type 1602A & 1603B**

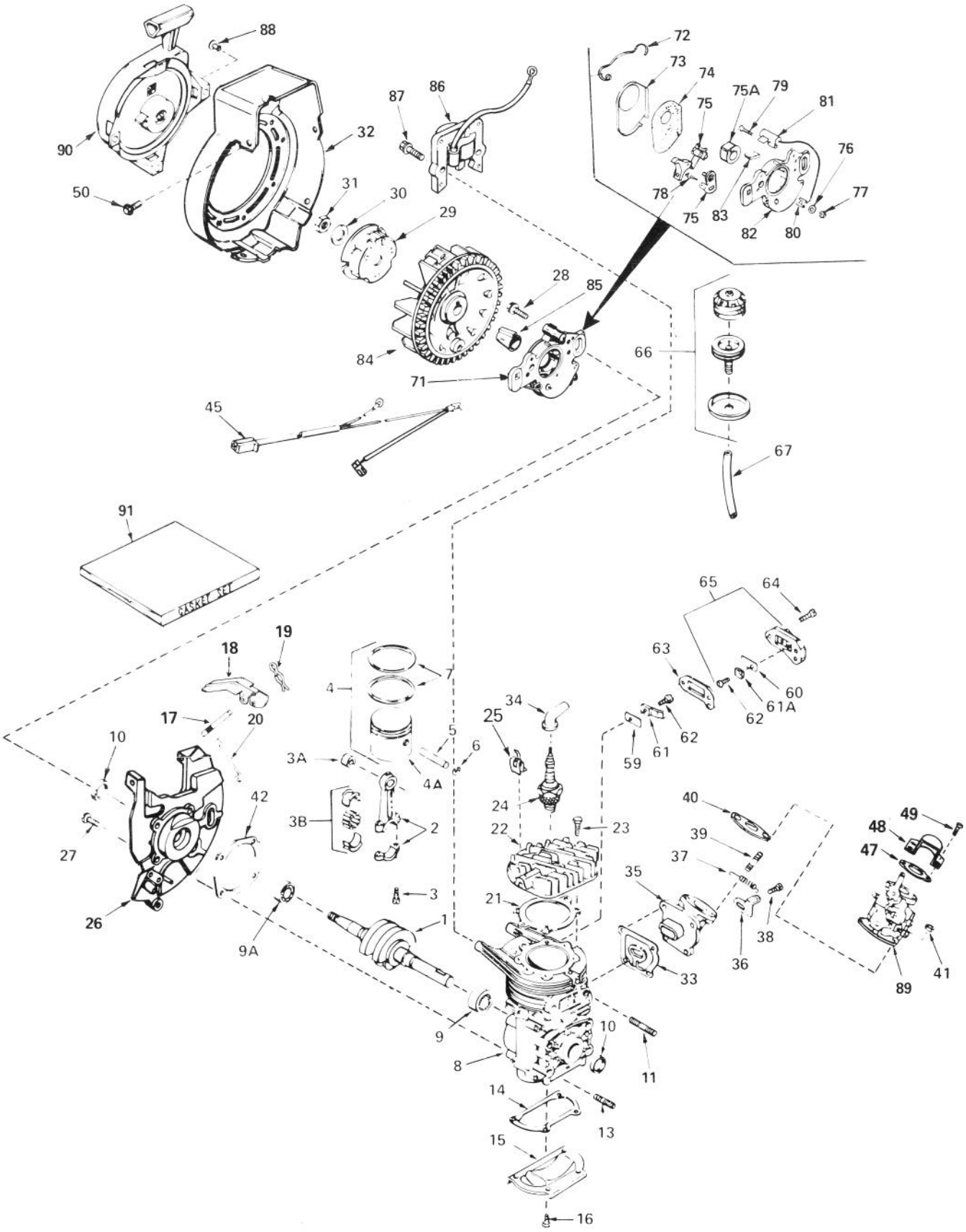

# ENGINE ASSEMBLY

## Engine Tecumseh Model No. AH520 Type 1602A & 1603B

| Ref. No. | Part No. | Description | No. Used |
|---|---|---|---|
| 1 | 290497 | Crankshaft | 1 |
| 2 | 310244 | Rod Assy., Connecting (Incl. Ref. #3, 3A & 3B) | 1 |
| 3 | 650633 | Screw, Connecting Rod | 2 |
| 3A | 530104A | Bearing, Cartridge | 1 |
| 3B | 530149 | Bearing & Liner Set, Needle | 1 |
| 4 | 310259 | Piston Assy. (Incl. Ref. #4A thru 7) | 1 |
| 4A | 310230B | Piston | 1 |
| 5 | 310178 | Pin, Piston | 1 |
| 6 | 310167 | Ring, Piston Pin Retaining | 2 |
| 7 | 310190 | Ring Set, Piston | 1 |
| 8 | | Block Assy., Cylinder (Order short block if replacement is required) | 1 |
| 9 | 530105 | Bearing, Needle | 1 |
| 9A | 530110 | Bearing, Ball | 1 |
| 10 | 510319 | Seal, Crankshaft | 2 |
| 11 | 650801 | Stud, Exhaust | 2 |
| 13 | 650796 | Stud | 4 |
| 14 | *510270 | Gasket, Cover | 1 |
| 15 | 570370A | Plate, Cover | 1 |
| 16 | 650579 | Screw, Pan Flex Hd. | 4 |
| 17 | 490295 | Shaft, Air Vane | 1 |
| 18 | 490296 | Vane Assy., Air | 1 |
| 19 | 490278 | Clip, Retainer | 1 |
| 20 | 490294 | Link, Governor | 1 |
| 21 | *510274 | Gasket, Cylinder Head | 1 |
| 22 | 250240A | Head, Cylinder | 1 |
| 23 | 650477 | Screw, Pan Flex Hd. | 4 |
| 24 | 611005 | Plug, Spark (RJ-18Y or equivalent) | 1 |
| 25 | 611021 | Clip (used on type 1602A, & 1603B) | 1 |
| 26 | 350402 | Base Assy., Blower Housing (Incl. Ref. #10 & 17) (used on type 1602A) | 1 |
| 26 | 350398 | Base Assy., Blower Housing (Incl. Ref. #10 & 17) (used on type 1603B) | 1 |
| 27 | 650497 | Screw, Pan Flex Hd. | 4 |
| 28 | 650747 | Screw, Hex Washer Hd. | 2 |
| 29 | 590551 | Cup, Starter | 1 |
| 30 | 650763 | Washer, Spring | 1 |
| 31 | 650390 | Nut, Flywheel | 1 |
| 32 | 350397 | Housing, Blower (used on type 1602A) | 1 |
| 32 | 350399 | Housing, Blower (used on type 1603B) | 1 |
| 33 | *510312 | Gasket, Port | 1 |
| 34 | 610118 | Cover, Spark Plug | 1 |
| 35 | 570627 | Elbow Assy., Adapter (Incl. Ref. #39) | 1 |
| 36 | 570626 | Lever, Adjusting | 1 |
| 37 | 490293 | Spring, Adjusting Lever | 1 |
| 38 | 650576 | Screw, Pan Flex Hd. | 4 |
| 39 | 650700 | Stud, Carburetor | 2 |
| 40 | *510213 | Gasket, Carburetor | 1 |
| 41 | 650457 | Nut, Hex | 2 |
| 42 | *510292 | Gasket, Housing Base | 1 |
| 45 | 611022 | Harness, Wire | 1 |
| 47 | 510206 | Gasket | 1 |
| 48 | 570434 | Baffle, Air | 1 |
| 49 | 650229 | Screw, Rd. Hd. | 2 |
| 50 | 650356 | Screw, Hex Washer w/locking Thread | 6 |
| 59 | 470136 | Reed, Compression Release (used on type 1602A) | 1 |
| 60 | 470135 | Reed, Compression Release (used on type 1602A) | 1 |
| 61 | 470151 | Plate, Reed Hold Down (used on type 1602A) | 1 |
| 61A | 470137 | Plate, Reed Hold Down (used on type 1602A) | 1 |
| 62 | 650654 | Screw, Pan Hd. (used on type 1602A) | 2 |
| 63 | *510263 | Gasket, Compression Release (used on type 1602A) | 1 |
| 64 | 650576 | Screw, Pan Flex Hd. (used on type 1602A) | 2 |
| 65 | 570437A | Cover Assy., Compression Release (Incl. Ref. #60, 61A & 62) (used on type no. 1602A) | 1 |
| 66 | 570629A | Primer Assy. (Incl. Ref. #68, 69 & 70) | 1 |
| 67 | 32180B | Line, Primer | 1 |
| 71 | 611006 | Stator Plate Assy. (Incl. Ref. #72 & 75 thru 83) | 1 |
| 72 | 30551 | Spring, Breaker Box Cover | 1 |
| 73 | 610947 | Cover, Dust | 1 |
| 74 | 30883 | Gasket, Dust Cover | 1 |
| 75 | 30547A | Contact Assy., Breaker (used on type 1602A & 1603B) | 1 |
| 75A | 30552 | Cam, Breaker | 1 |
| 76 | 610385 | Washer | 1 |
| 77 | 610408 | Nut | 1 |
| 78 | 29181 | Breaker Fastening Screw & Washer | 1 |
| 79 | 610593 | Condenser Fastening Screw | 1 |
| 80 | 33356 | Terminal, Ground | 1 |
| 81 | 30548B | Condenser | 1 |
| 82 | 611008 | Plate, Stator | 1 |
| 83 | 30549 | Felt, Cam Wiper | 1 |
| 84 | 611007 | Flywheel (used on type 1602A) | 1 |
| 84 | 611010 | Flywheel (used on type 1603B) | 1 |
| 85 | 611014 | Sleeve, Flywheel | 1 |

# ENGINE ASSEMBLY (Continued)

Engine Tecumseh Model No. AH520 Type 1602A & 1603B

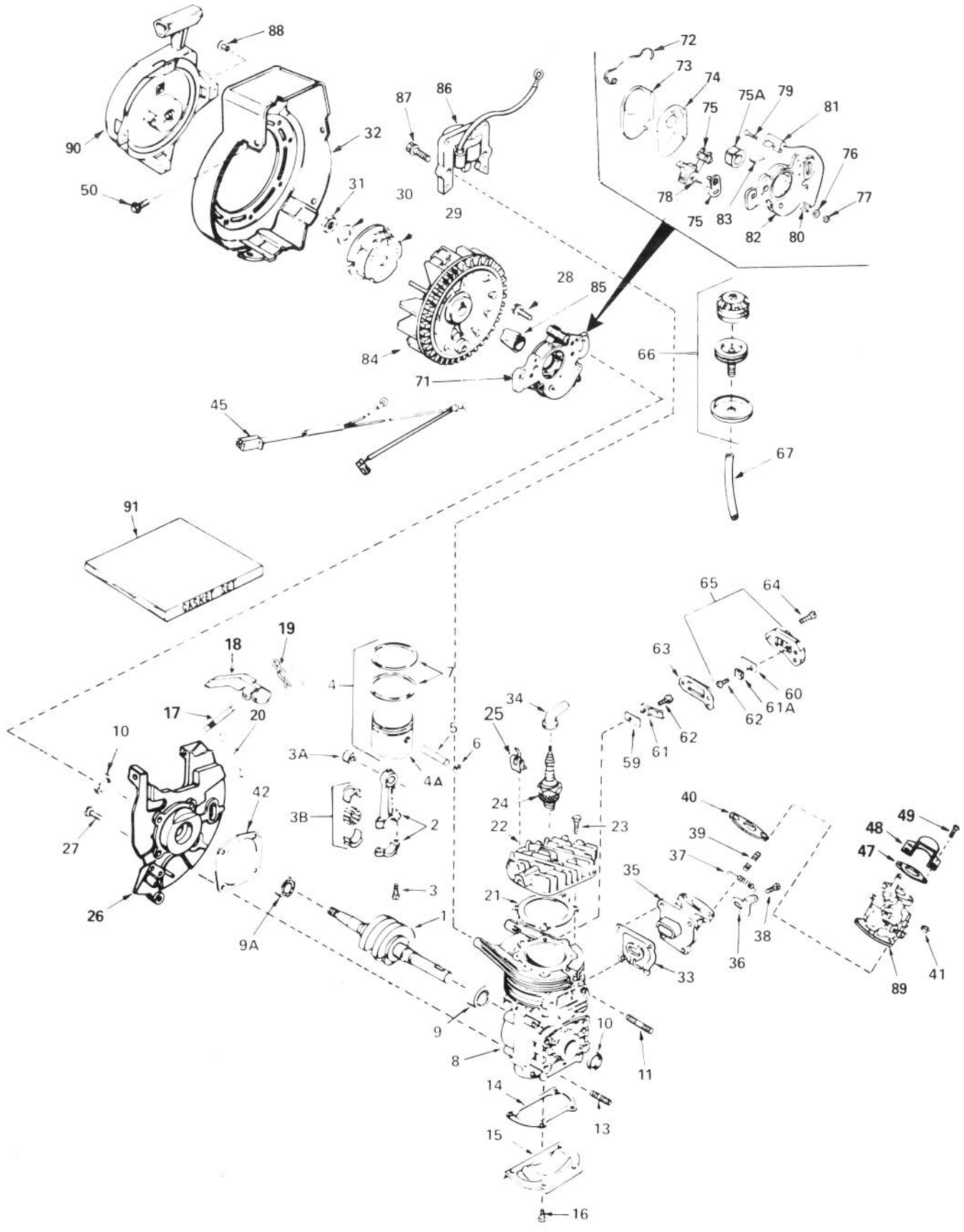

# ENGINE ASSEMBLY (Continued)

## Engine Tecumseh Model No. AH520 Type 1602A & 1603B

| Ref. No. | Part No. | Description | No. Used |
|---|---|---|---|
| 86 | 34431 | Lamination & Coil Assy. (Incl. Ref. #34) | 1 |
| 87 | 650814 | Screw, Hex Hd. | 2 |
| 88 | | Rivet, Pop (3/16" dia.) (Can be purchased locally) | 4 |

| Ref. No. | Part No. | Description | No. Used |
|---|---|---|---|
| 89 | 632142 | Carburetor (Incl. Ref. #40) (used on type 1602A) | 1 |
| 89 | 632142A | Carburetor (Incl. Ref. #40) (used on type 1603B) | 1 |
| 90 | 590537 | Starter Assy., Rewind | 1 |
| 91 | 510264D | Gasket Set (Incl. items marked*) | 1 |

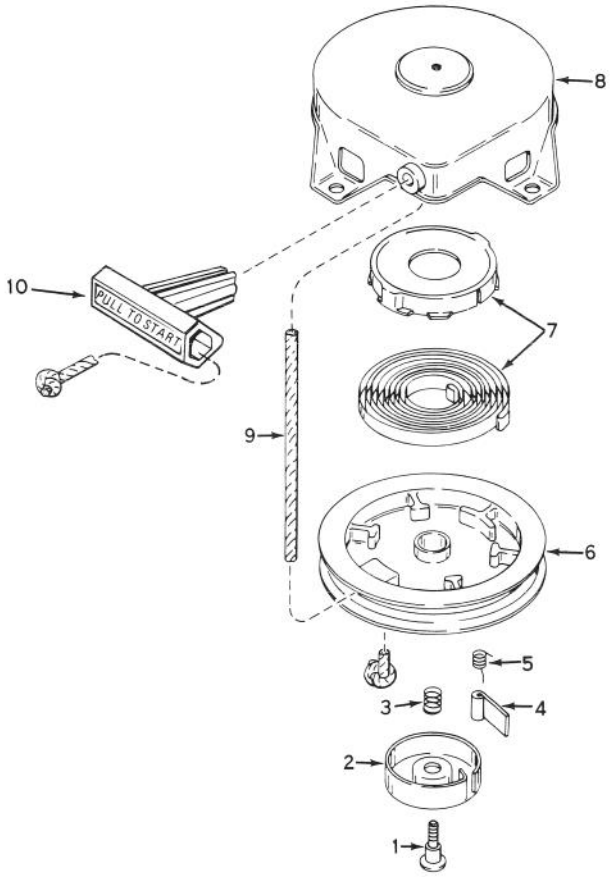


# SHROUD & REWIND STARTER NO. 590537

**Engine Tecumseh Model No. AH520 Type 1602A & 1603B**

| Ref. No. | Part No. | Description | No. Used |
|---|---|---|---|
| 1 | 590409A | Screw, Retainer | 1 |
| 2 | 590410 | Retainer, R.H. | 1 |
| 3 | 590411 | Spring, Brake | 1 |
| 4 | 590148 | Dog, Starter | 1 |
| 5 | 590412 | Spring, R.H. Dog | 1 |

| Ref. No. | Part No. | Description | No. Used |
|---|---|---|---|
| 6 | 590413A | Pulley | 1 |
| 7 | 590414 | Spring & Keeper Assy. | 1 |
| 8 | 590536 | Housing Assy., Starter | 1 |
| 9 | 590535 | Rope, Starter | 1 |
| 10 | 590452 | Handle Assy., Starter | 1 |

# IDENTIFICATION AND ORDERING

### MODEL AND SERIAL NUMBERS

The S-200 has two identification numbers. A model number and a serial number. The two numbers are stamped on a decal which is located on right side of rotor housing, just ahead of the right wheel. In any correspondence concerning the S-200, supply model and serial numbers to assure that correct information and replacement parts are obtained.

To order replacement parts from an Authorized TORO Service Dealer, supply the following information:

1. Model and serial numbers of the S-200.
2. Part number, description, and quantity of part(s) desired.

**Note:** Do not order by reference number if a parts catalog is being used; use the PART NUMBER.

## The Toro Promise

*A ONE YEAR LIMITED WARRANTY*

*The Toro Company promises to repair your TORO Product if defective in materials or workmanship. The following time periods from the date of purchase apply:*

Residential Product . . . . . 1 Year
Residential Products Used Commercially . . . 45 Days

*The costs of parts and labor are included, but the customer pays the transportation costs. Just return any residential product to an Authorized TORO Service Dealer or TORO Distributor.*

Should you feel your TORO Product is defective and wish to rely on The Toro Promise, the following procedure is recommended:

1. Contact any Authorized TORO Service Dealer, TORO Master Service Dealer, or TORO Distributor (the Yellow Pages of your telephone directory is a good reference source).
2. He will either instruct you to return the product to him or recommend another Authorized TORO Service outlet which might be more convenient.
3. Bring the product along with your original sales slip, or other evidence of purchase date, to the service dealer.
4. The servicing dealer will inspect the unit, advise you whether the product is defective and, if so, make all repairs necessary to correct the defect without extra charge to you.

If for any reason you are dissatisfied with the dealer's analysis of the defect or the service performed, you may contact us.

Write:

TORO Consumer Service Department
8111 Lyndale Avenue South
Minneapolis, Minnesota 55420

The above remedy of product defects through repair by an Authorized TORO Service Dealer is the purchaser's sole remedy for any defect.

THERE IS NO OTHER EXPRESS WARRANTY. ALL IMPLIED WARRANTIES OF MERCHANTABILITY AND FITNESS FOR USE ARE LIMITED TO THE DURATION OF THE EXPRESS WARRANTY.

Some states do not allow limitations on how long an implied warranty lasts, so the above limitation may not apply to you.

This warranty applies only to parts or components which are defective and does not cover repairs necessary due to normal wear, misuse, accidents, or lack of proper maintenance. Regular, routine maintenance of the unit to keep it in proper operating condition is the responsibility of the owner.

All warranty repairs reimbursable under The Toro Promise must be performed by an Authorized TORO Service Dealer using Toro approved replacement parts.

Repairs or attemped repairs by anyone other than an Authorized TORO Service Account are not reimbursable under The Toro Promise. In addition, these unauthorized repair attempts may result in additional malfunctions, the correction of which is not covered by warranty.

THE TORO COMPANY IS NOT LIABLE FOR INDIRECT, INCIDENTAL OR CONSEQUENTIAL DAMAGES IN CONNECTION WITH THE USE OF THE PRODUCT INCLUDING ANY COST OR EXPENSE OF PROVIDING SUBSTITUTE EQUIPMENT OR SERVICE DURING PERIODS OF MALFUNCTION OR NON-USE.

Some states do not allow the exclusion or limitation of incidental or consequential damages, so the above limitation or exclusion may not apply to you.

This warranty gives you specific legal rights, and you may also have other rights which vary from state to state.

### COUNTRIES OTHER THAN THE UNITED STATES OR CANADA

Customers who have purchased TORO products exported from the United States or Canada should contact their TORO Distributor (Dealer) to obtain guarantee policies for your country, province or state. If for any reason you are dissatisfied with your Distributor's service or have difficulty obtaining guarantee information, contact the TORO importer. If all other remedies fail, you may contact us at The Toro Company.

Compliance with Radio Interference Regulations Certified.
Certifie Conforme au Reglement sur le Brouillage Radioelectrique.
V26-059

# MAINTENANCE RECORD

| Date | Hours Used | Check Scraper | Check Belt | Check *Spark Plug | Preparing For Storage | Comments |
|---|---|---|---|---|---|---|
| | | | | | | |
| | | | | | | |
| | | | | | | |