Form No. 3473-365 Rev A

TORO®

Count on it.

Parts Catalog

Flex-Force Power System™ 60V MAX 36cm

Lawn Mower

Model No. 21836T—Serial No. 326000000 and Up

Register at www.Toro.com.
Original Instructions (EN)

CE

3473-365 A

Ordering Replacement Parts

To order replacement parts, please supply the part number, the quantity, and the description of each part desired.

Understanding Reference Numbers

Each identified part in an illustration has a reference number. The reference number for a part also appears in the parts list, along with other information about the part.

This catalog uses two special reference number formats, one to indicate parts in a service assembly and another to indicate the quantity of a given part in an illustration.

Service Assembly Reference Numbers

Parts in service assemblies have reference numbers in the form a:b. The a represents the reference number of the entire service assembly and the b represents a sequential number unique to each part within the service assembly.

For example, a wheel assembly might be identified by reference number 6, the tire by 6:1, the valve by 6:2, and the wheel by 6:3. When you order the assembly identified by reference number 6, you receive all parts identified by reference numbers 6:1,6:2, and 6:3. However, you may also order any part individually. Reference numbers of this type appear in illustration and in parts lists.

Reference Numbers Indicating Quantity

In an illustration, if a reference number indicates more than one part, the reference number has the form nX y. The n represents the quantity of the part, the X is the multiplication symbol, and the y represents the reference number.

For example, in an illustration, the reference number 2X 37 means that two of the parts identified by reference number 37 are indicated.

Contents

Frame Assembly 4
Grass Box Assembly No. 134-6957 6
Battery Interface Assembly No. 134-4105 8
Motor, Battery and Blade Assembly 10
Traction and Height-of-Cut Assembly 12
Handle Assembly 14
Control Arm Assembly No. 134-5240 16
Attachments and Accessories 18

© 2025—The Toro® Company
8111 Lyndale Avenue South
Bloomington, MN 55420

Contact us at www.Toro.com.
Printed in the USA.
All Rights Reserved

Frame Assembly

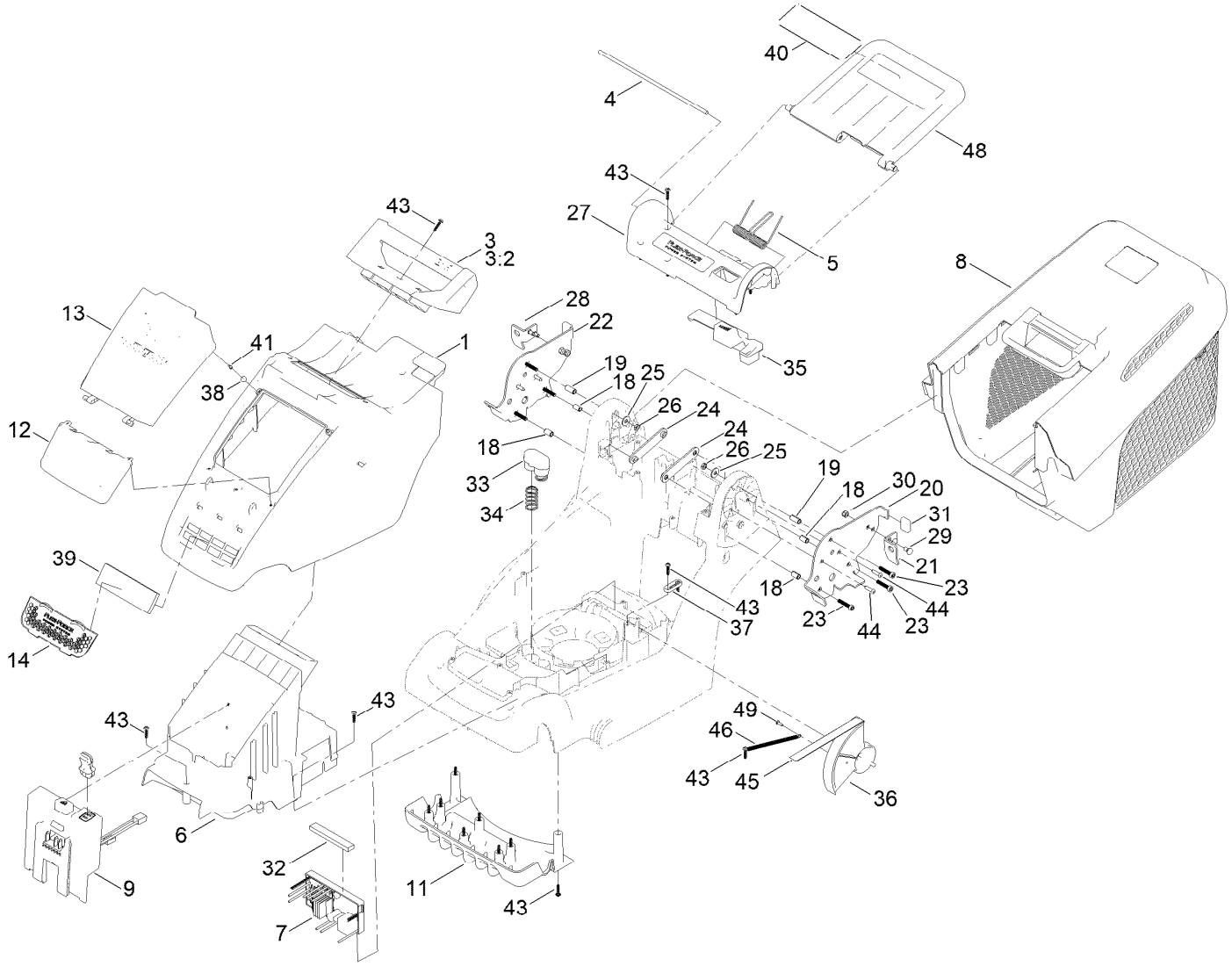

Frame Assembly (continued)

Ref.	Part Number	Qty.	Description
1	134-5434	1	Top Cover
3	134-5311	1	Carry Handle
3:2	134-5410	1	Artwork - 36CM
4	134-5288	1	Rod, Rear Flap
5	134-4037	1	Spring, Rear Deflector
6	134-4120	1	Battery Holder
7	134-6381	1	Driver-Motor, 36CM
8	134-6957	1	Grass Box ASM
9	134-4105	1	Battery Interface Assembly
11	134-4137	1	Front Fins
12	134-5316	1	Battery Door Lower, Printed
13	134-5313	1	Battery Door, Printed
14	134-4322	1	Air Inlet Grill-Toro
18	134-6369	4	Bush
19	134-6374	2	Bush
20	134-4396	1	Mount Plate, Handlebar, Left
21	134-5175	1	Bracket, V-Stow, Left
22	134-4398	1	Mount Plate, Handlebar, Right
23	134-6371	6	Screw-Tsh
24	134-6370	2	Brace-Bar
25	134-5439	2	Washer-Plain
26	134-6376	1	Nut-Hex
27	134-4113	1	HOC Cover
28	134-5177	1	Bracket, V-Stow, Right
29	134-5235	4	Bolt-Carriage
30	134-5234	4	Nut-Hex
31	134-4434	2	Rubber Foot-V-Stow
32	134-5432	1	Filter, Air-Control Board
33	134-5282	1	Battery Spring Cover
34	134-4371	2	Spring, Battery Eject
35	134-6378	1	HOC Button, 36CM
36	134-4099	1	HOC Dial
37	134-6367	1	Tab
38	114-5896	2	Magnet
39	134-4341	1	Inner Filter-Foam
40	162-1005	1	Decal - Safety 60V
41	134-4375	1	Screw-Txph
43	134-7001	24	Screw-T
44	134-5431	4	Screw-T
45	134-5436	1	Decal - HOC
46	134-6356	1	Spring
48	134-5433	1	Rear Deflector, Toro
49	134-5361	1	Screw-T

Grass Box Assembly No. 134-6957

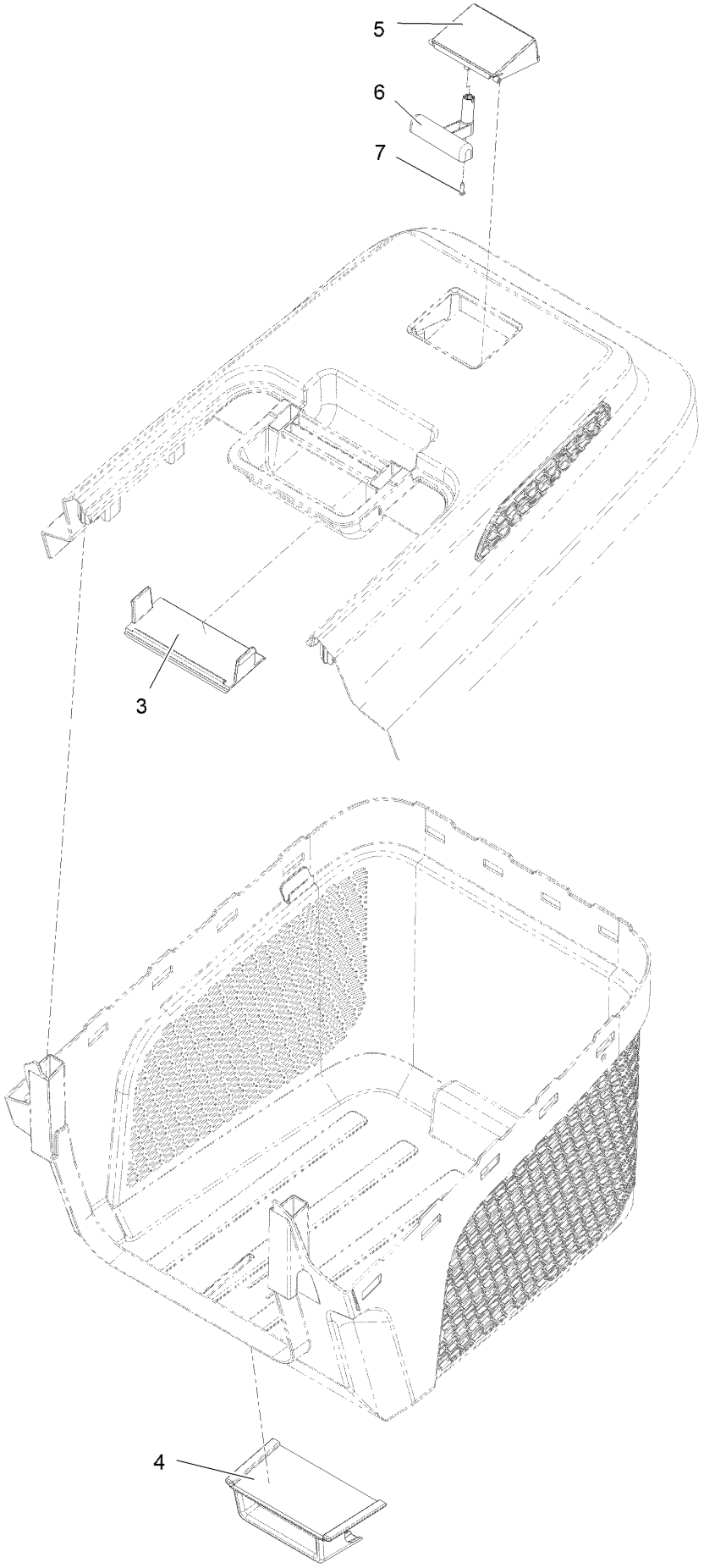

Grass Box Assembly No. 134-6957 (continued)

Ref.	Part Number	Qty.	Description
3	134-4141	1	Grass Box Handle Infill
4	134-4388	1	Grass Box Hook
5	134-4143	1	Grass Box Full Indicator
6	134-5430	1	Counter Weight
7	134-5435	1	Screw-T

Battery Interface Assembly No. 134-4105

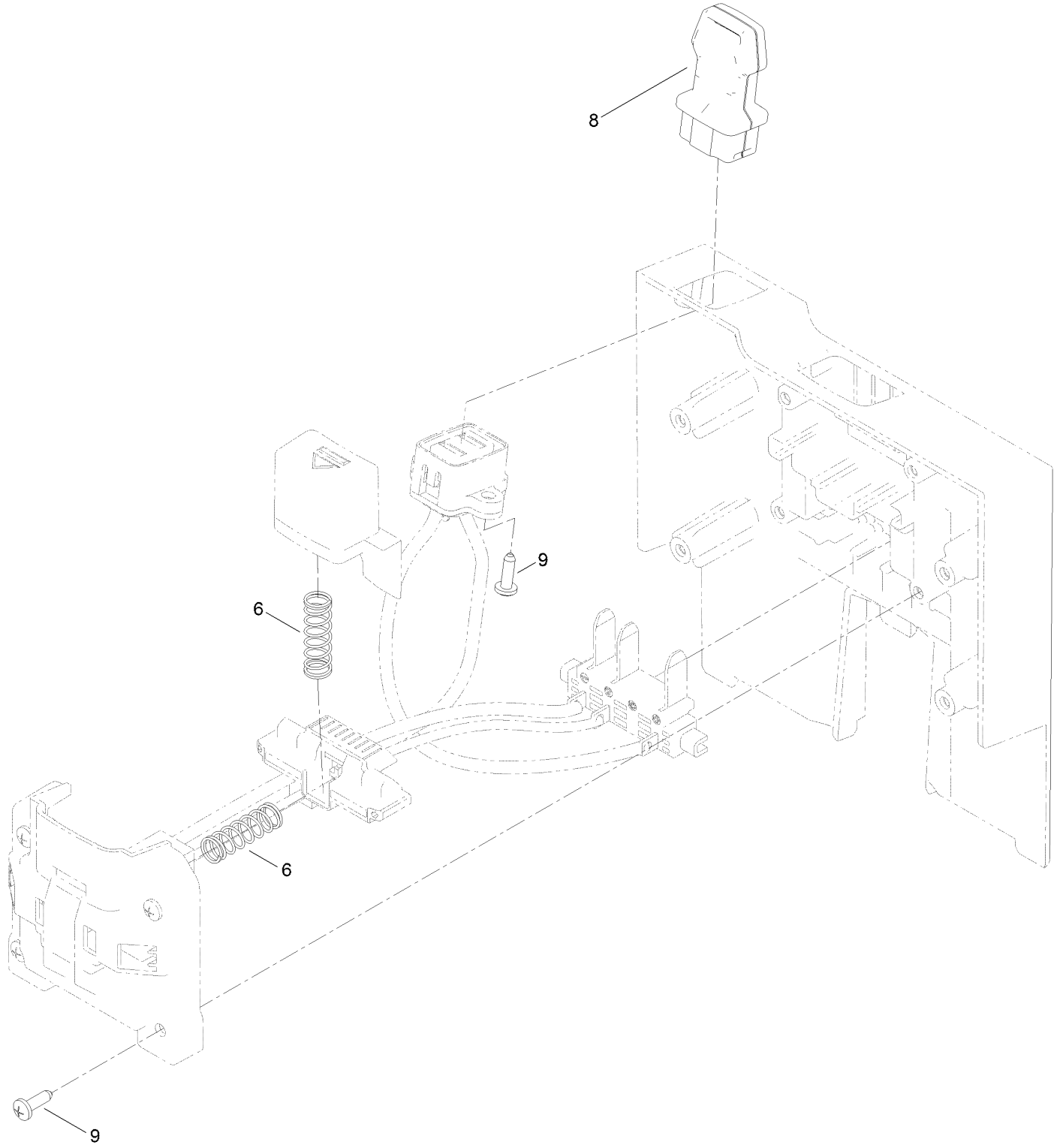

Battery Interface Assembly No. 134-4105 (continued)

Ref.	*Part Number*	*Qty.*	*Description*
6	134-5362	2	Spring, Battery Latch
8	134-4385	1	Power Key
9	134-5361	6	Screw-T

Motor, Battery and Blade Assembly

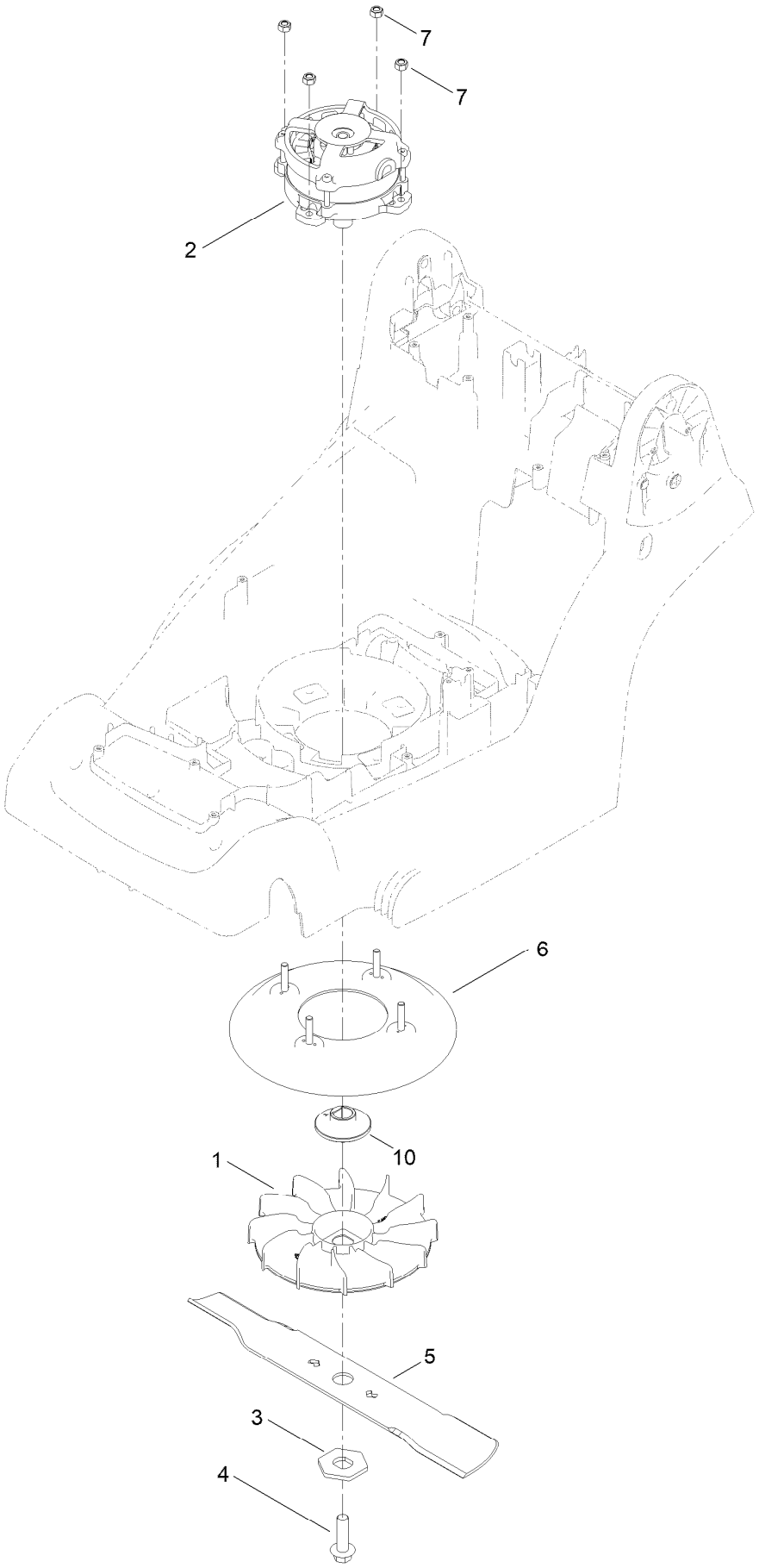

Motor, Battery and Blade Assembly (continued)

Ref.	Part Number	Qty.	Description
1	134-8648	1	Fan, Square Hole
2	134-4106	1	Motor, Brushless, 60V, 600W
3	134-8649	1	Washer, Hex
4	134-4383	1	Blade Bolt
5	134-5212	1	Blade, Mulch, 36CM
6	134-4133	1	Blade Cover
7	134-4467	4	Nut-Hex
10	134-8647	1	Boss, Blade Sintered

Traction and Height-of-Cut Assembly

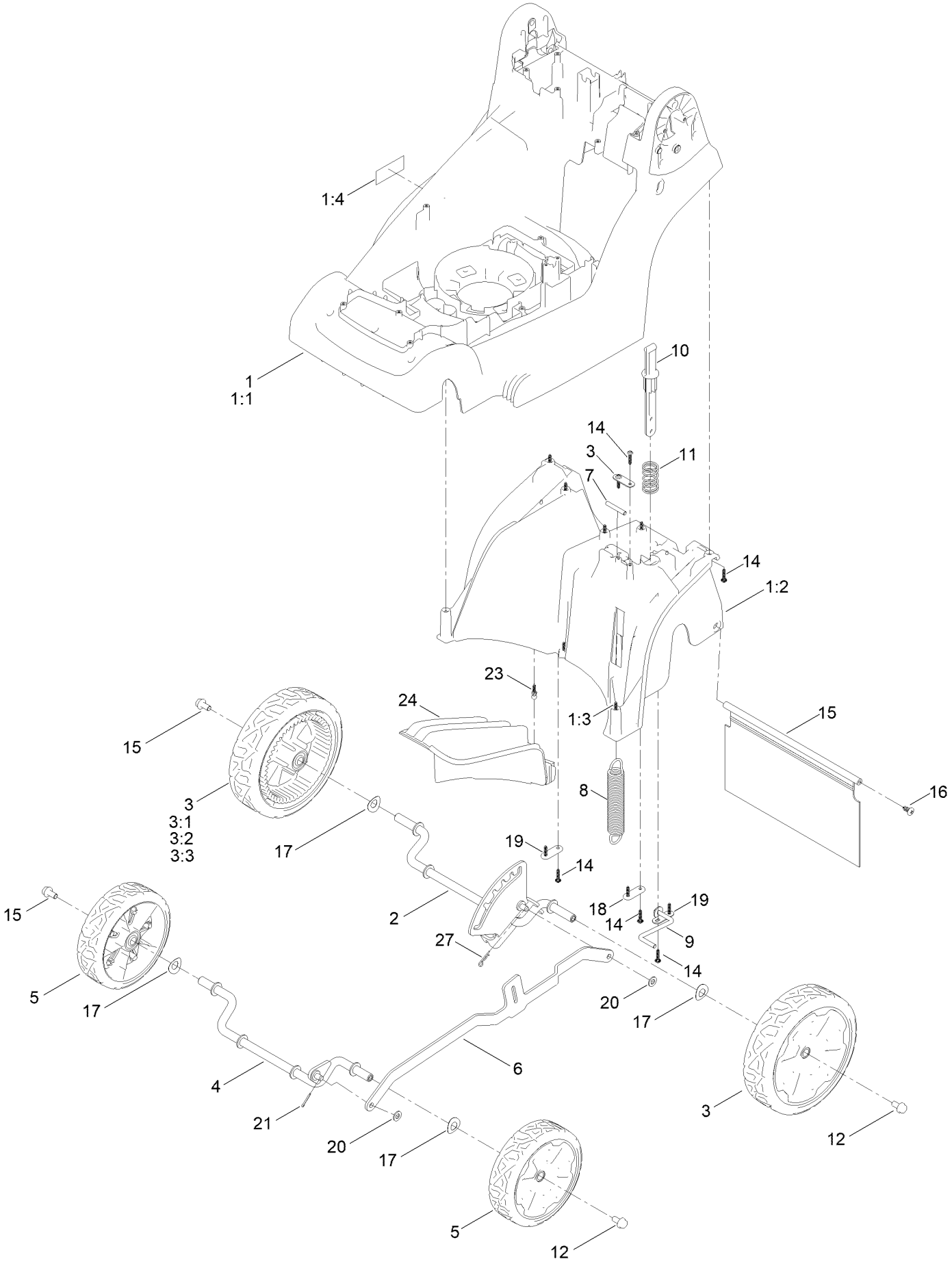

Traction and Height-of-Cut Assembly (continued)

Ref.	Part Number	Qty.	Description
1	134-6912	1	Deck, Glued (36)
1:1	134-4111	1	Deck-36CM
1:2	134-4117	1	36CM 4 Wheel Rear Chassis Moulding
1:3	134-7001	8	Screw-T
1:4	134-5099	1	Decal - Safety
2	134-4418	1	Rear Axle Frame, Assy, Wheel
3	134-4363	2	Wheel-Rear Assembly
3:1	134-4404	1	Wheel-Toro Rear
3:2	134-4377	2	Bearing
3:3	134-4366	1	Rear Wheel Trim - Toro
4	134-4130	1	Front Axle, Assembly
5	134-4307	2	Wheel-Toro Front Assembly
6	134-4129	1	Con-Rod, 4 Wheel
7	134-4096	1	Bar, Spring Mount
8	134-4092	1	HOC Spring, 4 Wheel
9	134-7568	1	HOC Wire ASM
10	134-4319	1	HOC Button Plunger
11	134-4088	1	Spring, HOC Button
12	134-4358	4	Bolt-HF
14	134-7001	9	Screw-T
15	134-4138	1	Shield-Trailing, 36CM
16	117-1092	2	Screw-PTH
17	134-4457	4	Washer-Wave
18	134-4411	2	Axle Plate
19	134-4394	2	Axle Plate, Small
20	106-4756	1	Washer-Plain
21	134-4454	1	Cotter Pin
23	134-5294	2	Pin, Retaining, Mulch Plug
24	134-5293	1	Mulch Plug
27	134-6827	1	Cotter Pin

Handle Assembly

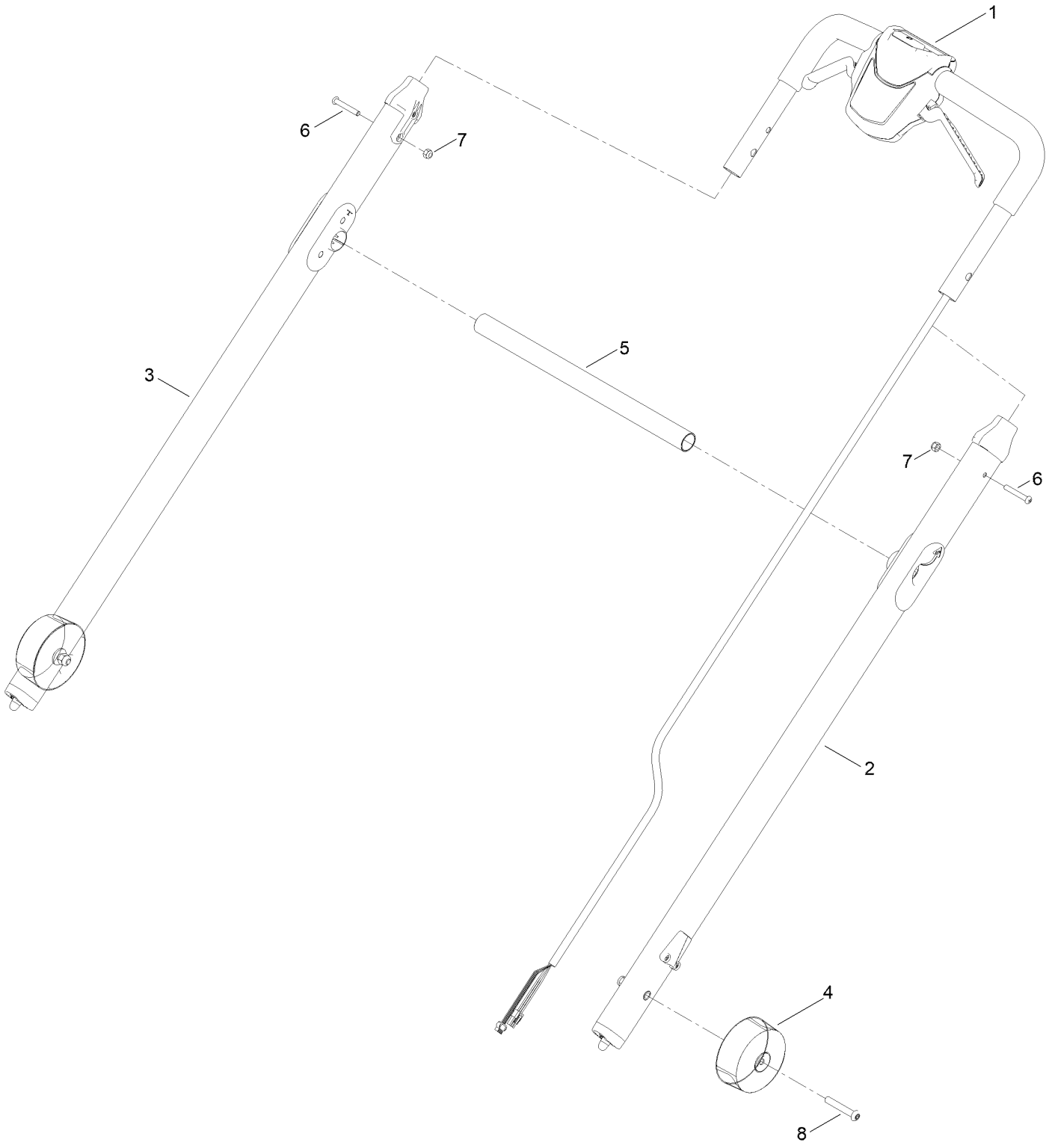

Handle Assembly (continued)

Ref.	Part Number	Qty.	Description
1	134-5240	1	Handlebar Control ASM, 36CM
2	134-6353	1	Handlebar ASM, LH
3	134-6354	1	Handlebar ASM, RH
4	134-4416	2	Handlebar End Cap
5	134-5239	1	Brace, Handlebar Release
6	134-5206	2	Bolt-P
7	134-5234	2	Nut-Hex
8	134-4492	2	Bolt, M8X50

Control Arm Assembly No. 134-5240

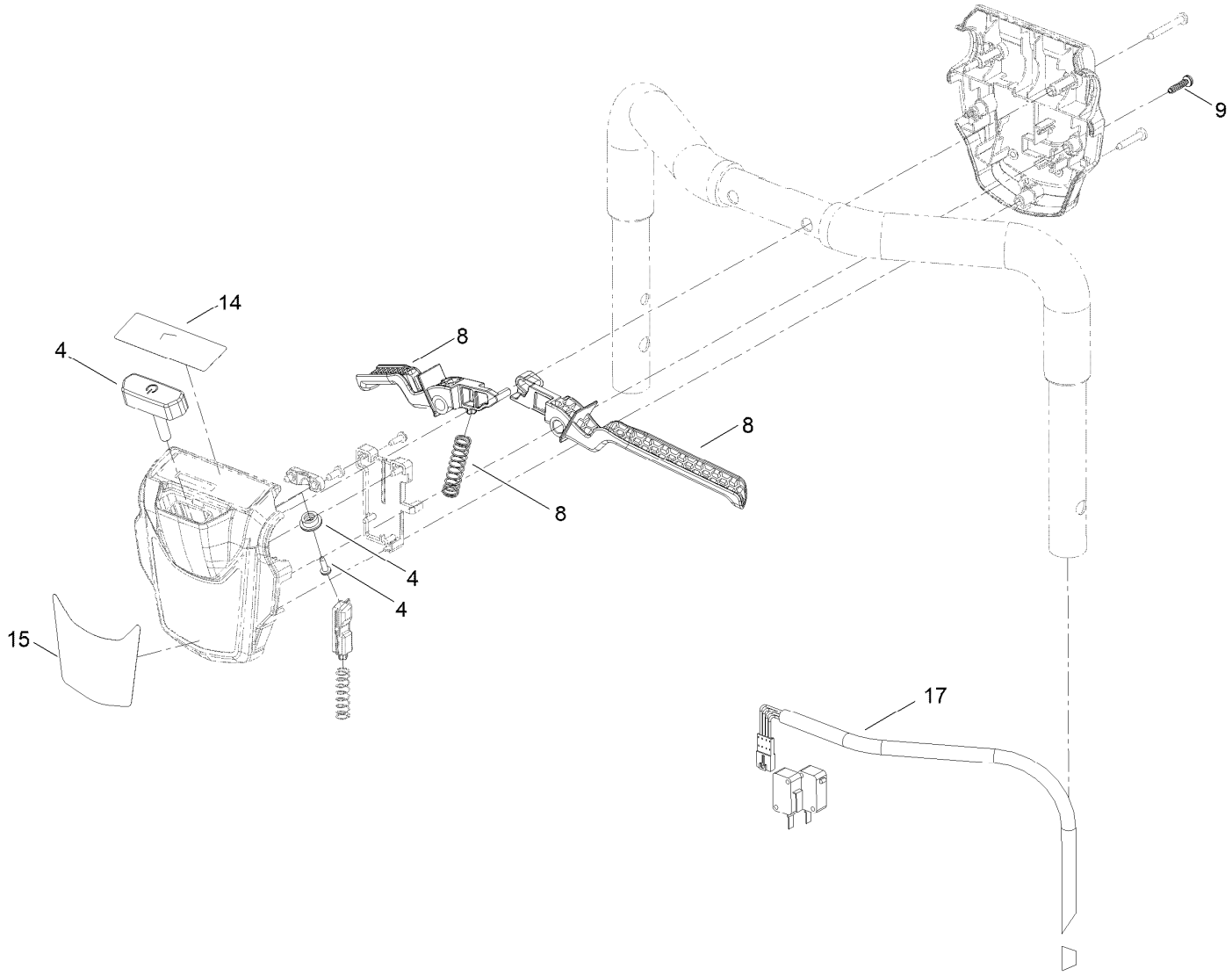

Control Arm Assembly No. 134-5240 (continued)

Ref.	Part Number	Qty.	Description
4	134-6903	1	Top Button Kit
8	134-6905	1	Upper Lever Kit (36)
9	134-5205	2	Screw-T
14	134-5297	1	Decal - Boost Key Mat
15	134-2697	1	Decal - Volta Handle
17	134-5455	1	Wiring Loom, Push

Attachments and Accessories

For 21836T — Flex-Force Power System 60V MAX 36cm Lawn Mower

Product Name	Model/Part
60V 2.5 AH Battery CE	81825
60V 4.0 AH Battery CE	81850
60V 6.0 AH Battery CE	81860
60V 7.5 AH Battery CE	81875
60V Battery Charger 2 Amp CE	81802
60v Battery Charger 5 Amp International	81805
Battery-LI-ION, 60V 2.5AH, 135WH	88925
Battery-LI-ION, 60V 4.0AH, 216WH	88941
Battery-LI-ION, 60V 6.0AH, 324WH	88960
Battery Charger, 60V 2.0 Amp CE	86902
Battery Charger, 60V 5.4 Amp CE	86905
Battery Charger, 60V 2-Pod 4A CE	86924

Notes:



Count on it.