FORM NO. 3312-252

TORO®

MODEL NO. 59160-4000001 & UP

PARTS CATALOG

36″ SNOWTHROWER ATTACHMENT (FRONT ENGINE RIDERS)

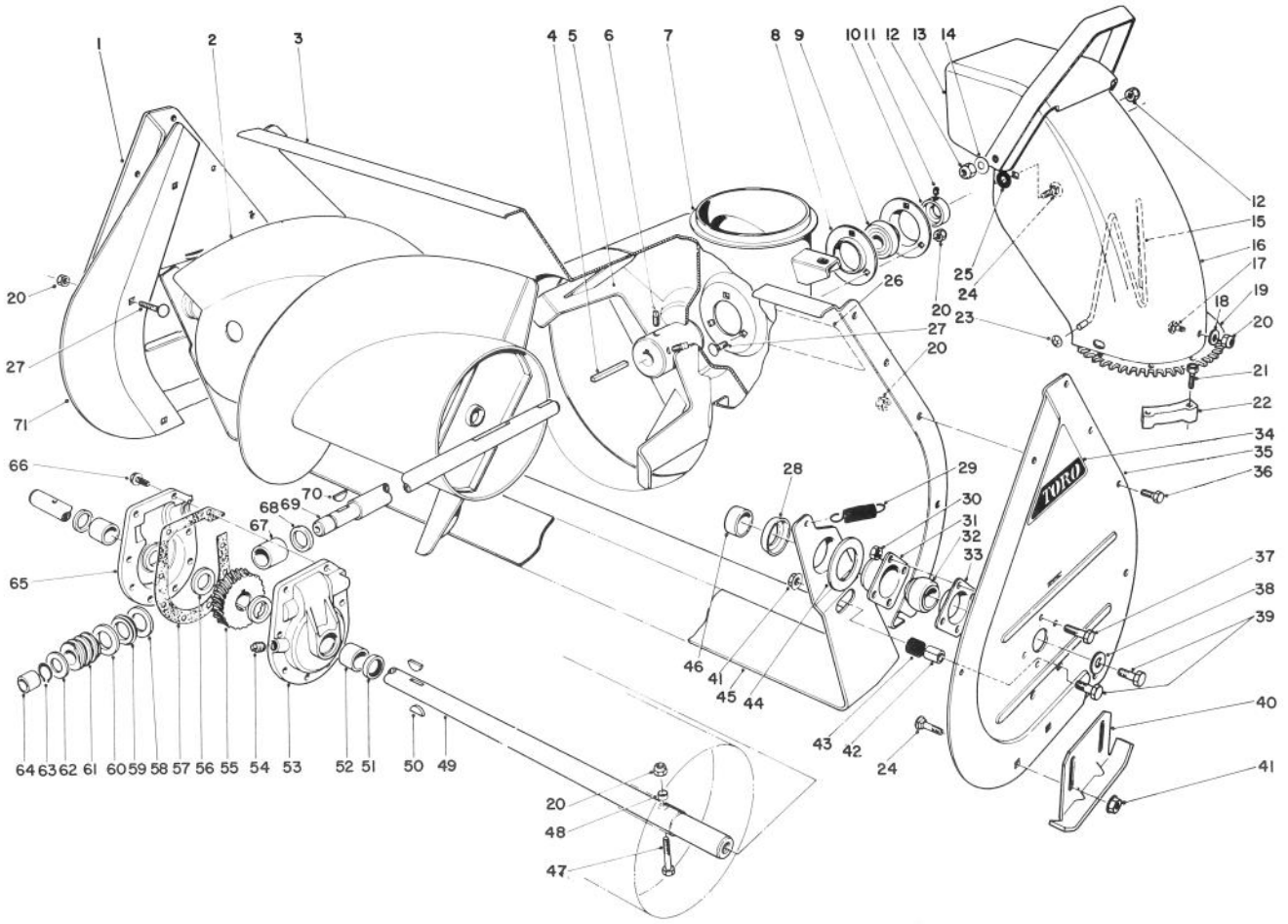

AUGER ASSEMBLY

Ref. No.	Part No.	Description	No. Used
1	39-6120	Sideplate Auger — R.H.	1
2	26-6180	Auger — R.H.	1
*	26-6190	Auger — L.H.	1
3	49-6960	Auger Housing	1
4	6-8590	Key-Impeller	1
5	19-8890	Impeller	1
6	3242-4	Set Screw	2
7	25-5170	Chute Ring	1
8	251-229	Bearing Flange	2
9	251-224	Bearing-Impeller	1
10	251-231	Locking Collar	1
11	3245-32	Set Screw	2
12	32152-2	Conelock Nut	2
13	11-7120	Deflector	1
14	3290-340	Belleville Washer	2
15	12-2040	Chute Wire	1
16	25-5440	Upper Chute	1
17	3230-18	Carriage Bolt	3

Ref. No.	Part No.	Description	No. Used
18	3256-23	Flat Washer	3
19	25-5290	Swivel Plate	1
20	3296-29	Locknut	24
21	27-0220	Screw-Special	6
22	25-5450	Swivel Block	3
23	3290-326	Push Nut	2
24	3231-27	Carriage Bolt	6
25	20-4320	Rubber Washer	2
26	29-6350	Decal-Auger Warning	1
27	3230-1	Carriage Bolt	9
28	26-6400	Positioner-Scraper Blade	2
29	5-7290	Spring-Scraper	2
30	32152-4	Locknut	8
31	20-0990	Flange-Bearing Front	2
32	20-0980	Bearing	2
33	20-1000	Flange-Bearing Rear	2
34	17-6500	Decal-Auger Sideplate	2

*Not Illustrated

COPYRIGHT® ALL RIGHTS RESERVED

The Toro Company — 1984
MINNEAPOLIS, MN 55420 — U.S.A.

PRICE $1.00

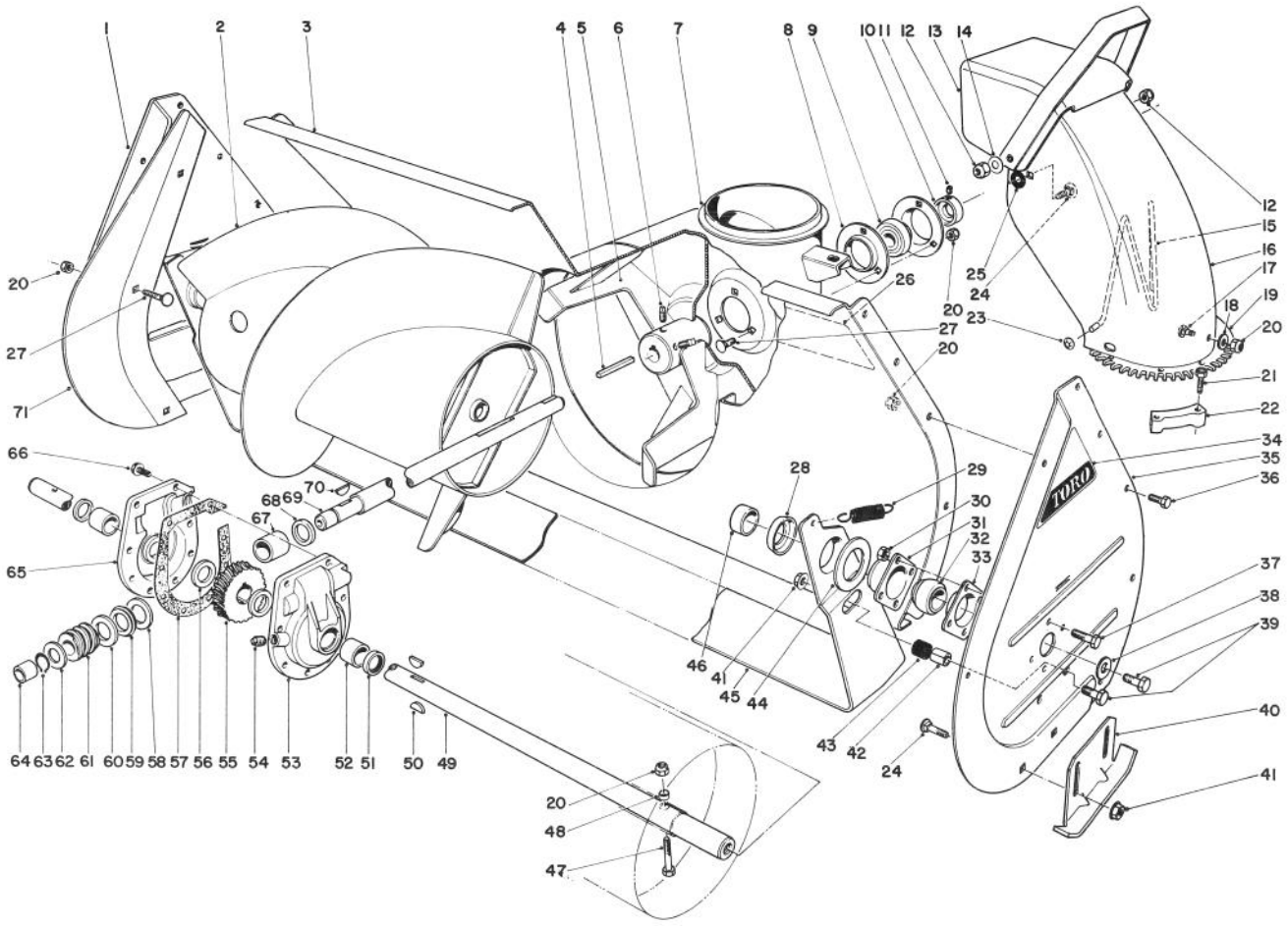

AUGER ASSEMBLY

Ref. No.	Part No.	Description	No. Used
35	39-6130	Sideplate Auger—L.H.	1
36	322-2	Capscrew	10
37	321-3	Capscrew	8
38	3-0750	Flat Washer	2
39	323-6	Capscrew	4
40	20-2840	Auger Skid	2
41	32128-21	Flange Locknut	6
42	25-5140	Standoff-Scraper Stop	2
43	25-5150	Bumper-Scraper Stop	2
44	20-0300	Spacer-Scraper Blade	2
45	19-9160	Scraper Blade	1
46	26-6390	Spacer-Auger	2
47	17-7030	Bolt-Auger	2
48	25-5090	Spacer-Auger Hub	2
49	11-7010	Auger Shaft	1
50	3257-33	Woodruff Key	2
51	7-0045	Oil Seal	2
52	256-237	Bushing	2
53	37-8860	Gear Case Bushing Assy.—L.H. (Incl. Ref. # 51, 52)	1
54	281-1	Pipe Plug	1

Ref. No.	Part No.	Description	No. Used
55	5-7180	Worm Gear	1
56	252-71	Thrust Bearing	2
57	40-8330	Gasket	1
58	252-78	Thrust Washer	1
59	252-76	Thrust Bearing	1
60	252-77	Thrust Washer	1
61	5-7170	Worm	1
62	3-8664	Thrust Washer	1
63	32120-72	Retaining Ring	1
64	256-32	Bushing	1
65	37-8850	Gear Case Bushing Assy.—R.H. (Incl. Ref. # 51, 52	1
66	32144-41	Thread Forming Screw	8
67	20-3210	Bushing	1
68	237-87	Seal	1
69	19-8540	Shaft-Impeller	1
70	3257-23	Woodruff Key	1
71	49-6620	Auger Housing Extension R.H.	1
*	49-6630	Auger Housing Extension L.H.	1
*	25-5280	Gear Case Assembly Complete	1

*Not Illustrated

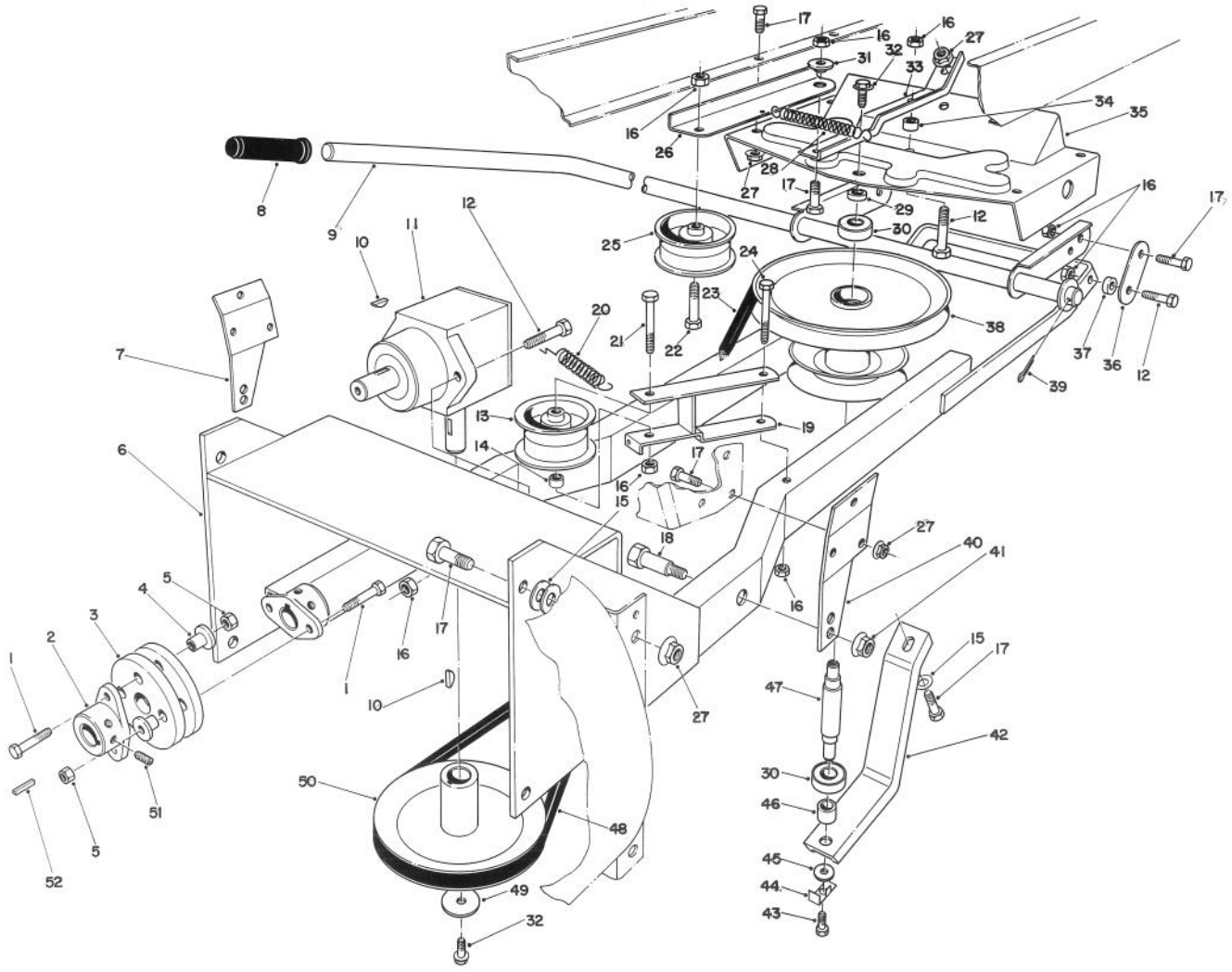

FRAME & PULLEY ASSEMBLY

Ref. No.	Part No.	Description	No. Used
1	322-7	Capscrew	4
2	49-6710	Hub-Coupling	2
3	49-6880	Rubber Coupling	2
4	49-6890	Spacer-Rubber Coupling	4
5	3296-29	Locknut	4
6	49-6520	Carrier Frame	1
7	49-6590	Bracket Front Mount—R.H.	1
8	31-4960	Handle Grip	1
9	49-6540	Handle-Lift	1
10	3257-5	Woodruff Key	2
11	49-6490	Gear Case Assembly	1
12	323-7	Capscrew	5
13	49-6980	Idler Pulley	1
14	20-7530	Spacer	1
15	3256-3	Flatwasher	9
16	3296-26	Locknut	10
17	323-6	Capscrew	18
18	49-6850	Shoulder Bolt	2
19	49-6910	Idler Arm-Front	1
20	49-6930	Spring-Extension	1
21	323-13	Capscrew	1
22	323-9	Capscrew	1
23	49-6940	V-Belt	1
24	323-15	Capscrew	1
25	49-6970	Idler Pulley	1
26	49-6610	Idler Arm-Rear	1

Ref. No.	Part No.	Description	No. Used
27	3290-357	Flange Locknut	15
28	49-6920	Spring-Extension	1
29	49-6680	Spacer-Upper	1
30	38-7820	Bearing	2
31	49-4040	Spacer-Idler Arm	1
32	3234-5	Flange Head Capscrew	2
33	49-6800	Support-Frame	1
34	36-5640	Spacer	1
35	49-6770	Frame-Rear	1
36	49-6550	Lift Linkage-Lower	2
37	23-5250	Spacer	2
38	49-6650	Spindle Housing Assembly	1
39	3272-17	Cotter Pin	1
40	49-6600	Bracket Front Mount—L.H.	1
41	32128-24	Flange Locknut	2
42	49-6790	Support-Shaft	1
43	322-3	Capscrew	1
44	49-6860	Locking Tab	1
45	3256-56	Flat Washer	1
46	49-6570	Spacer-Lower	1
47	49-6560	Shaft-Spindle	1
48	49-6950	V-Belt	1
49	2-1590	Flat Washer	1
50	49-6660	Pulley	1
51	3245-2	Set Screw	4
52	3-6857	Key	1

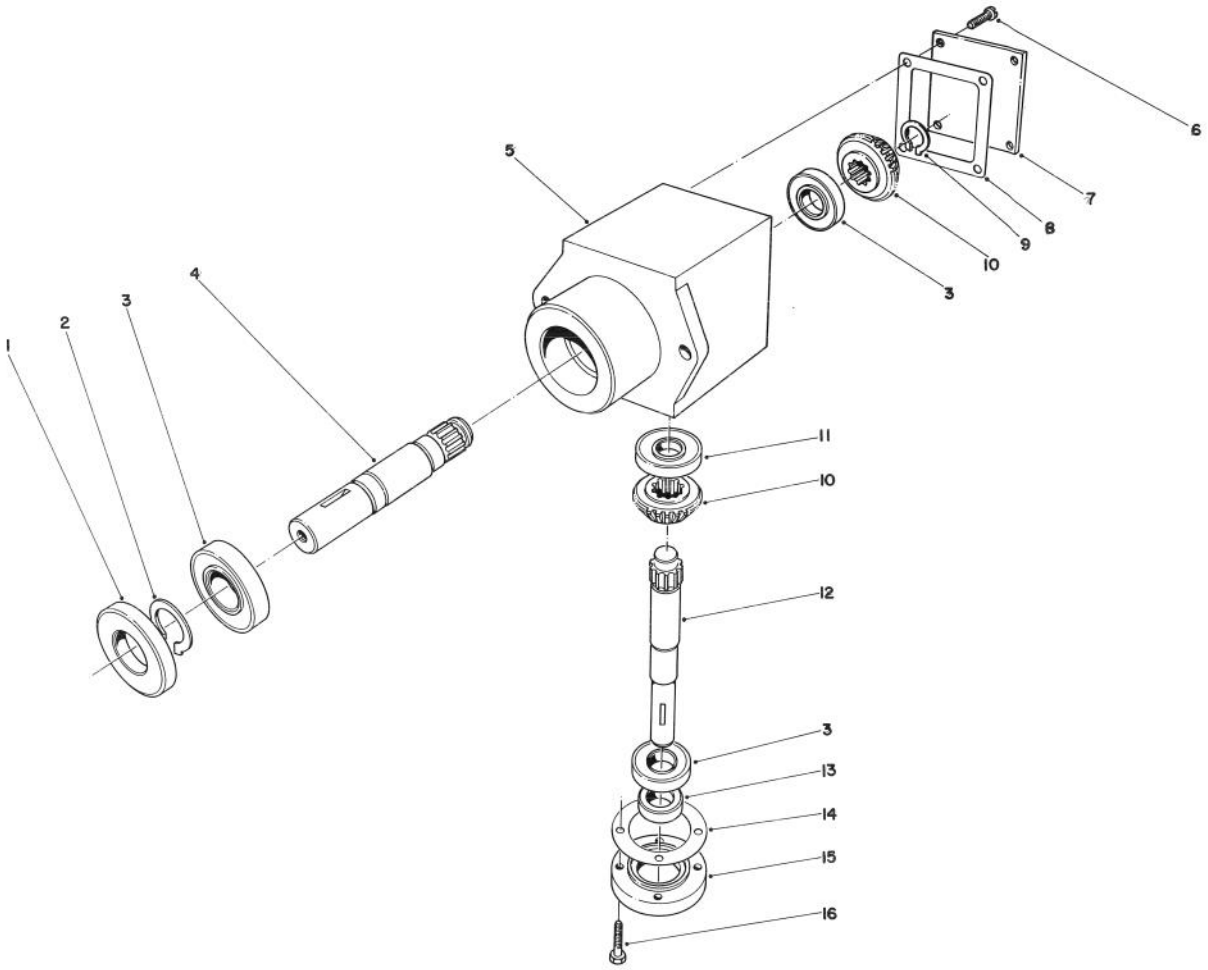

GEAR CASE ASSEMBLY

Ref. No.	Part No.	Description	No. Used
1	788029	Seal	1
2	788019	Retaining Ring	1
3	780034	Bearing	3
4	776113	Shaft-Output	1
5	770026A	Gear Case	1
6	792025	Pan Head Screw	4
7	772035	Cover	1
8	788028	Gasket	1
9	788018	Retaining Ring	1

Ref. No.	Part No.	Description	No. Used
10	778046	Bevel Gear	2
11	780024	Bearing	1
12	776227	Shaft-Input	1
13	788031	Oil Seal	1
14	788030	Gasket	1
15	786029	Bearing Cap Assembly (Incl. Ref. # 13 & 16)	1
16	792026	Capscrew	4
	794340	Gear Case Assembly Complete	1

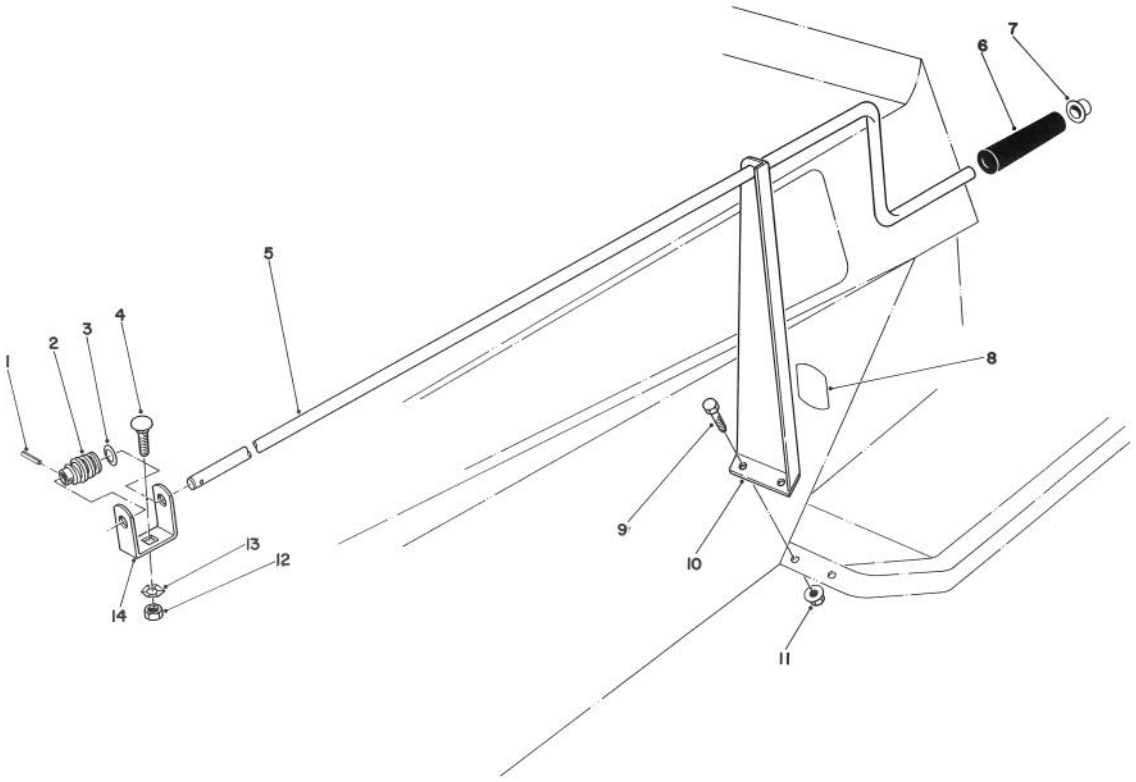

CHUTE CONTROL ASSEMBLY

Ref. No.	Part No.	Description	No. Used
1	32121-50	Roll Pin	1
2	8-8600	Worm Gear	1
3	3290-212	Washer-Spring	1
4	3230-2	Carriage Bolt	1
5	41-8640	Rod-Chute Control	1
6	40-8230	Grip-Chute Control	1
7	3290-320	Push-On Speed Nut	1

Ref. No.	Part No.	Description	No. Used
8	29-6370	Decal-Chute Direction	1
9	322-3	Capscrew	2
10	49-6730	Bracket-Chute Control	1
11	32128-20	Flange Locknut	2
12	3296-29	Locknut	1
13	3290-238	Pyramidal Washer	1
14	49-6720	Bracket-Worm	1

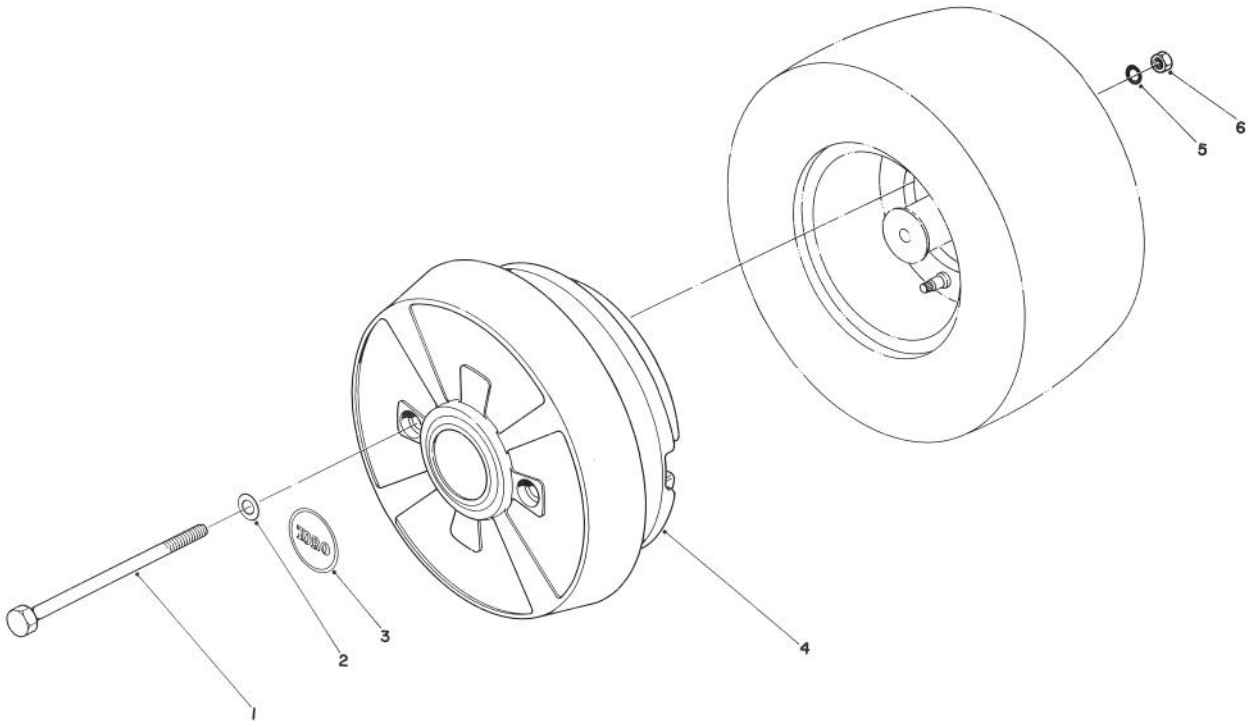

WHEEL WEIGHT KIT

Ref. No.	Part No.	Description	No. Used
1		Capscrew	4
2		Flatwasher	4
3	33-8340	Decal-Toro	2

Ref. No.	Part No.	Description	No. Used
4		Wheel Weight	2
5		Lockwasher	4
6		Hex Nut	4
*	49-7010	Wheel Kit (Incl. Ref. # 1-6)	1

*Not Illustrated

The Toro Promise

A ONE YEAR LIMITED WARRANTY

The Toro Company promises to repair your TORO Product if defective in materials or workmanship. The following time periods from the date of purchase apply:

Residential Product	1 Year
Residential Products Used Commercially . . .	45 Days

The costs of parts and labor are included, but the customer pays the transportation costs. Just return any residential product to an Authorized TORO Service Dealer or TORO Distributor.

Should you feel your TORO Product is defective and wish to rely on The Toro Promise, the following procedure is recommended:

1. Contact any Authorized TORO Service Dealer, TORO Master Service Dealer, or TORO Distributor (the Yellow Pages of your telephone directory is a good reference source).

2. He will either instruct you to return the product to him or recommend another Authorized TORO Service outlet which might be more convenient.

3. Bring the product along with your original sales slip, or other evidence of purchase date, to the service dealer.

4. The servicing dealer will inspect the unit, advise you whether the product is defective and, if so, make all repairs necessary to correct the defect without extra charge to you.

If for any reason you are dissatisfied with the dealer's analysis of the defect or the service performed, you may contact us.

Write:

TORO Consumer Service Department
8111 Lyndale Avenue South
Minneapolis, Minnesota 55420

The above remedy of product defects through repair by an Authorized TORO Service Dealer is the purchaser's sole remedy for any defect.

THERE IS NO OTHER EXPRESS WARRANTY. ALL IMPLIED WARRANTIES OF MERCHANTABILITY AND FITNESS FOR USE ARE LIMITED TO THE DURATION OF THE EXPRESS WARRANTY.

Some states do not allow limitations on how long an implied warranty lasts, so the above limitation may not apply to you.

This warranty applies only to parts or components which are defective and does not cover repairs necessary due to normal wear, misuse, accidents, or lack of proper maintenance. Regular, routine maintenance of the unit to keep it in proper operating condition is the responsibility of the owner.

All warranty repairs reimbursable under The Toro Promise must be performed by an Authorized TORO Service Dealer using Toro approved replacement parts.

Repairs or attempted repairs by anyone other than an Authorized TORO Service Account are not reimbursable under The Toro Promise. In addition, these unauthorized repair attempts may result in additional malfunctions, the correction of which is not covered by warranty.

THE TORO COMPANY IS NOT LIABLE FOR INDIRECT, INCIDENTAL OR CONSEQUENTIAL DAMAGES IN CONNECTION WITH THE USE OF THE PRODUCT INCLUDING ANY COST OR EXPENSE OF PROVIDING SUBSTITUTE EQUIPMENT OR SERVICE DURING PERIODS OF MALFUNCTION OR NON-USE.

Some states do not allow the exclusion or limitation of incidental or consequential damages, so the above limitation or exclusion may not apply to you.

This warranty gives you specific legal rights, and you may also have other rights which vary from state to state.

MAINTENANCE RECORD
