Form No. 3329–818

Roller Kit

Used on Cutting Units for Reelmaster® 5000 and 6000 Series

Part No. 106–9606

Parts Catalog

Ordering Replacement Parts

To order replacement parts, please supply: the part number, the quantity, and the description of each part desired.

Understanding Reference Numbers

Each identified part in an illustration has a reference number. The reference number for a part also appears in the parts list, along with other information about the part.

This catalog uses two special reference number formats, one to indicate parts in a service assembly and another to indicate the quantity of a given part in an illustration.

Service Assembly Reference Numbers

Parts in service assemblies have reference numbers in the form **a:b.** The **a** represents the reference number of the entire service assembly and the **b** represents a sequential number unique to each part within the service assembly.

For example, a wheel assembly might be identified by reference number **6**, the tire by **6:1**, the valve by **6:2**, and the wheel by **6:3**. When you order the assembly identified by reference number 6, you receive all parts identified by reference numbers 6:1, 6:2, and 6:3. However, you may also order any part individually.

Reference numbers of this type appear in illustrations and in part lists.

Reference Numbers Indicating Quantity

In an illustration, if a reference number indicates more than one part, the reference number has the form **nX y.** The **n** represents the quantity of the part, the **X** is the multiplication symbol, and the **y** represents the reference number.

For example, in an illustration, the reference number **2X 37** means that two of the parts identified by reference number 37 are indicated.

© The TORO Company — 2003
All Rights Reserved

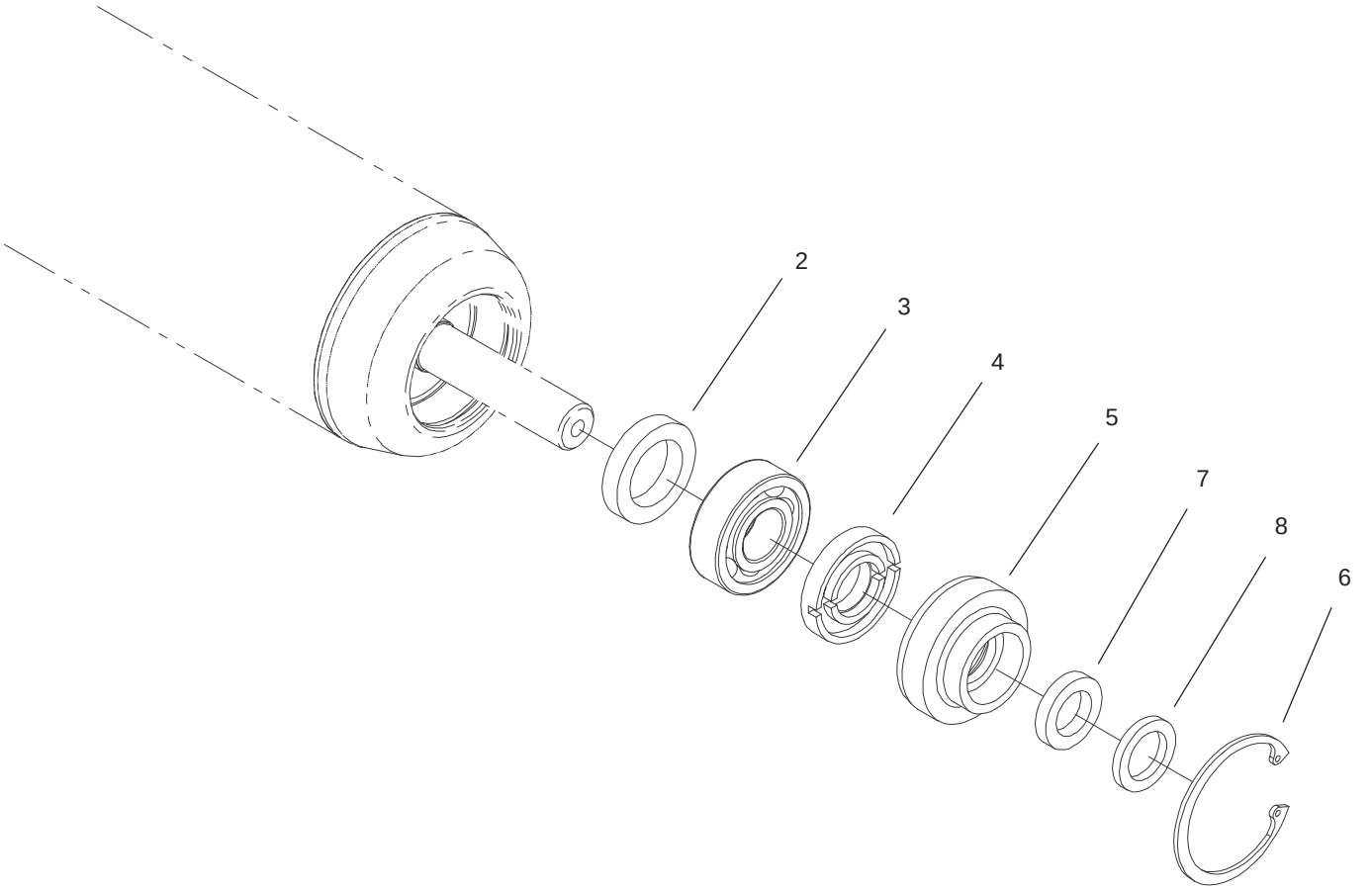

T–3967

Sheet No.:0

Roller Kit Assembly No. 106–9606

Ref. No.	Part No.	Qty.	Description
2	93–3007	2	Seal–Oil
3	109966	2	Bearing–Ball
4	93–1251	2	Seal–Inner
5	93–1252	2	Seal–Outer
6	32120–62	2	Ring–Retaining
7	253–70	2	Seal–Oil
8	93–2931	2	Washer–Roller

Ref. No.	Part No.	Qty.	Description