FORM NO. 3312-253

TORO®

MODEL NO. 38040 — 4000001 & UP
MODEL NO. 38050 — 4000001 & UP

PARTS CATALOG

524 AND 724 SNOWTHROWERS

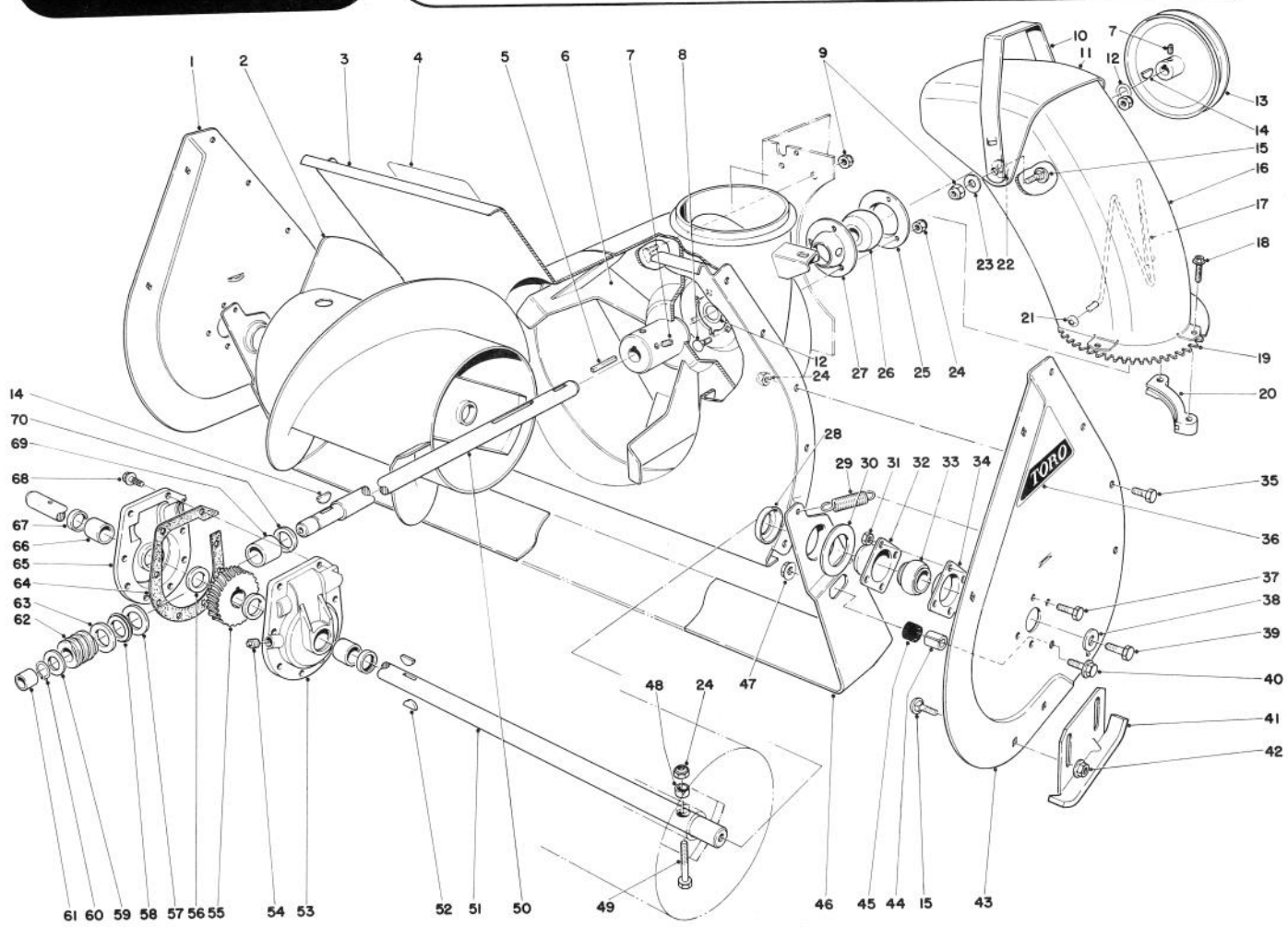

AUGER ASSEMBLY

Ref. No.	Part No.	Description	No. Used
1	43-7440	Sideplate Auger Right	1
2	26-6140	Auger Right	1
*	26-6150	Auger Left	1
3	40-8120	Auger Housing	1
4	29-6350	Decal — Auger Warning	1
5	6-8590	Key — Impeller	1
6	20-1260	Impeller	1
7	3242-4	Set Screw	4
8	3230-1	Carriage Bolt	3
9	32152-2	Locknut	6
10	20-1410	Handle Deflector	1
11	20-1400	Deflector Chute	1
12	3-0737	Thrust Washer	2

Ref. No.	Part No.	Description	No. Used
13	20-1310	Pulley Impeller	1
14	3257-23	Woodruff Key	2
15	3231-27	Carriage Bolt	6
16	20-1390	Chute	1
17	12-2040	Wire Chute	1
18	27-0210	Special Screw	4
19	43-7470	Swivel Gear Chute	1
20	40-8150	Retainer Chute	2
21	3290-326	Pushnuts	2
22	20-4320	Washer Rubber	2
23	3290-340	Washer Belleville	2
24	3296-29	Locknut	15
25	26-6120	Bearing Flange Rear	1

*Not Illustrated

COPYRIGHT © ALL RIGHTS RESERVED
The Toro Company — 1983
MINNEAPOLIS, MN 55420 — U.S.A.

PRICE $1.00

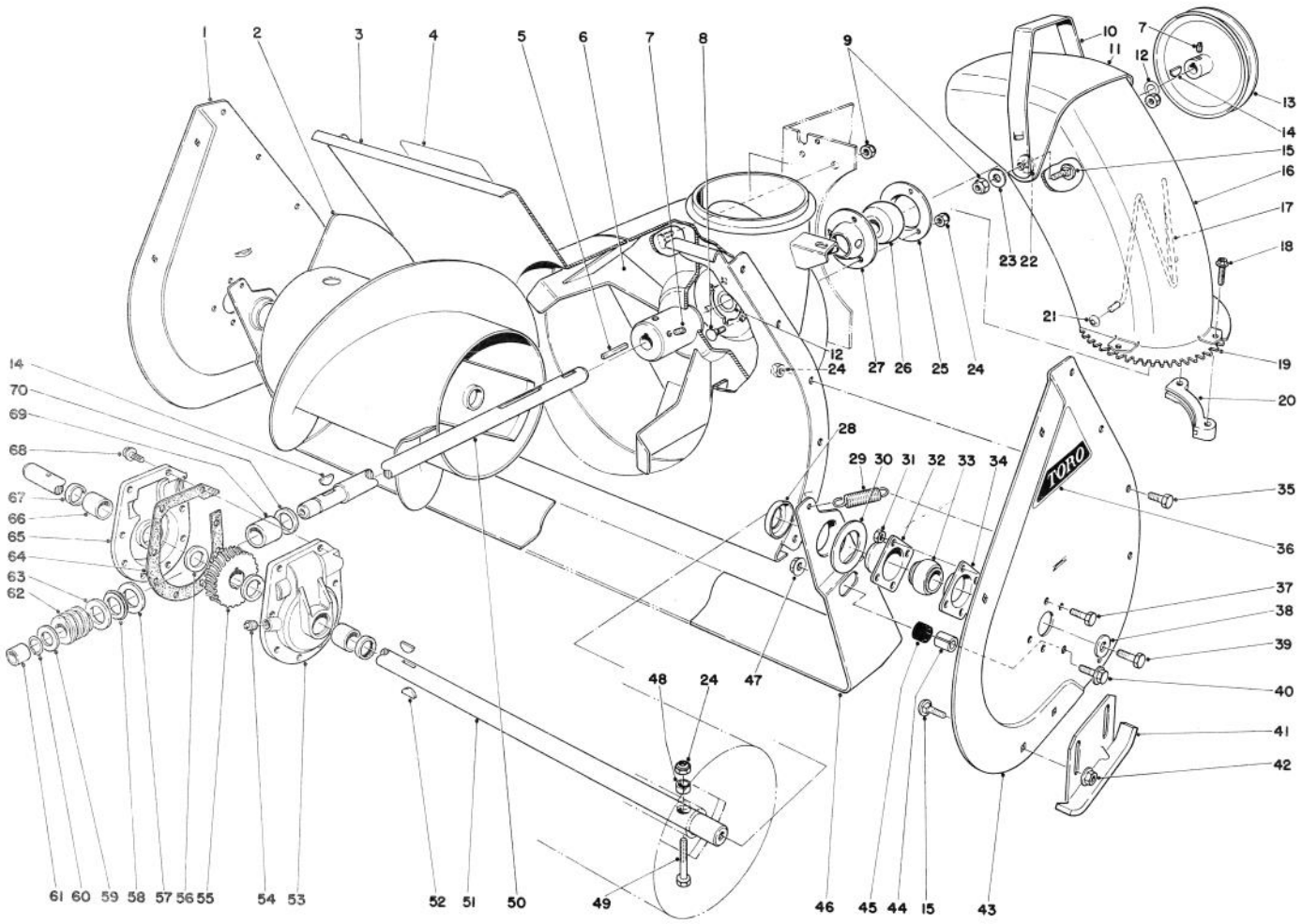

AUGER ASSEMBLY (Continued)

Ref. No.	Part No.	Description	No. Used
26	26-6100	Bearing Impeller	1
27	26-6110	Bearing Flange Front	1
28	26-6400	Positioner — Scraper Blade	2
29	5-7290	Spring — Scraper Blade	2
30	20-0300	Spacer — Scraper Blade	2
31	32152-4	Locknut	8
32	20-0990	Bearing Flange Auger	2
33	20-0980	Bearing Auger	2
34	20-1000	Bearing Flange Auger	2
35	322-2	Capscrew	10
36	17-6500	Decal — Auger Side Plate	2
37	321-3	Capscrew	8
38	3-0750	Flat Washer	2
39	323-6	Capscrew	2
40	3234-11	Hex Flange Bolt	2
41	20-2840	Skid	2
42	3290-357	Flange Nut	4
43	43-7430	Sideplate Auger Left	1
44	25-5140	Standoff — Scraper Blade	2
45	25-5150	Bumper — Scraper Blade	2
46	20-1320	Scraper Blade	1

Ref. No.	Part No.	Description	No. Used
47	32128-21	Locknut	2
48	25-5090	Spacer Auger Hub	2
49	17-7030	Bolt Auger	2
50	36-2580	Shaft Impeller	1
51	20-1170	Shaft Auger	1
52	3257-33	Key Woodruff	2
53	37-8860	Gear Case (Incl. Ref. #66 & 67)	1
54	281-1	Pipe Plug	1
55	5-7180	Gear Worm	1
56	252-71	Thrust Bearing	2
57	252-78	Thrust Washer	1
58	252-76	Thrust Bearing	1
59	3-8664	Thrust Washer	1
60	32120-72	Retaining Ring	1
61	256-32	Bushing	1
62	5-7170	Worm	1
63	252-77	Thrust Washer	1
64	40-8330	Gasket	1
65	37-8850	Gear Case (Incl. Ref. #66 & 67)	1

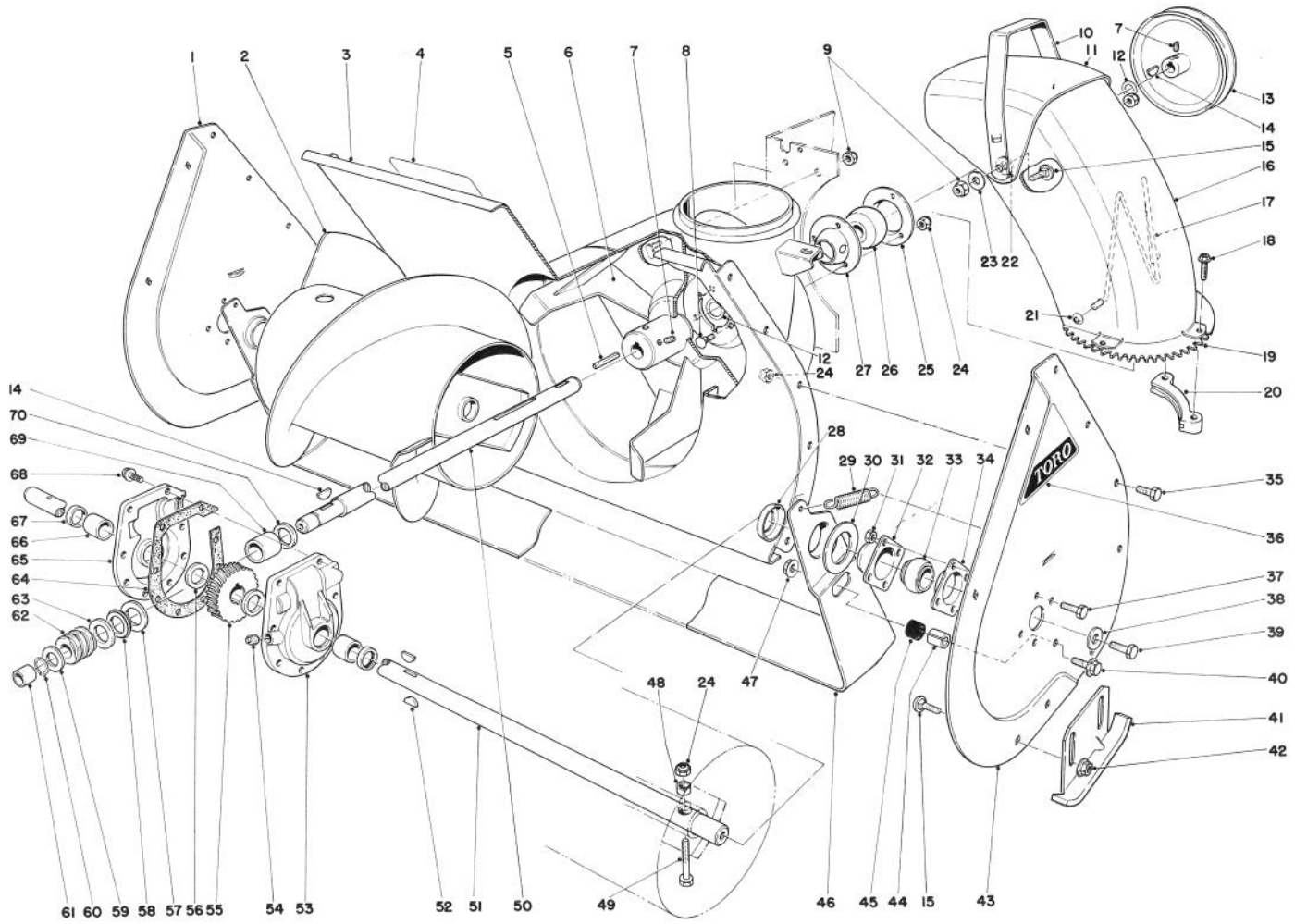

AUGER ASSEMBLY (Continued)

Ref. No.	Part No.	Description	No. Used
66	256-237	Bushing	2
67	7-0045	Oil Seal	2
68	32144-41	Thread Form Screw	8
69	20-3210	Bushing	1
70	237-87	Seal	1

Ref. No.	Part No.	Description	No. Used
*	19-7000	Gear Case Assembly Complete	1
*	20-0690	Drift Breaker Kit (Optional)	1
*	25-9150	Decal — Replacement Serial Plate	1

*Not Illustrated

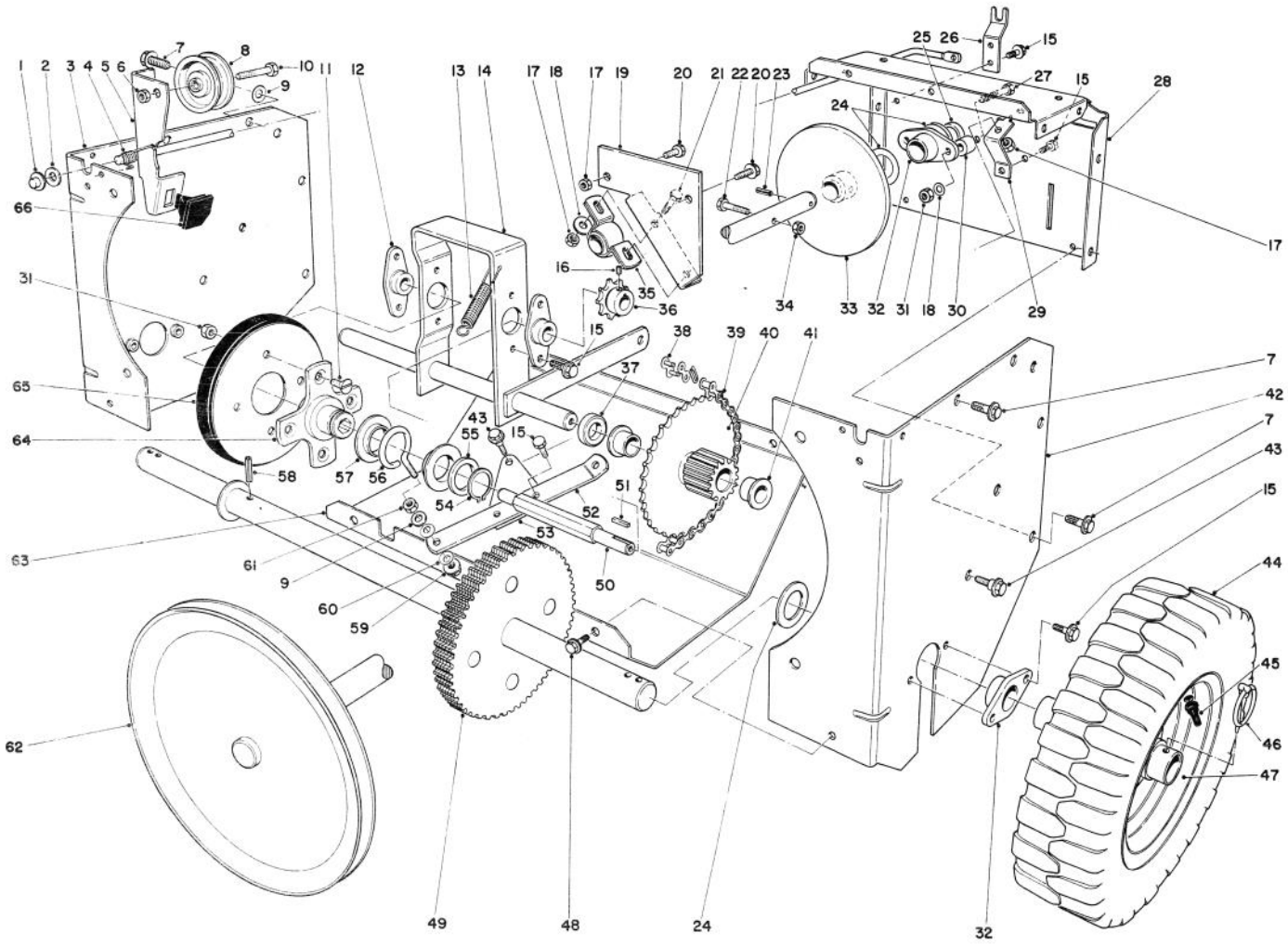

TRACTION ASSEMBLY

Ref. No.	Part No.	Description	No. Used
1	3290-383	Pushnut	1
2	3256-25	Flat Washer	1
3	20-1420	Side Plate Traction	1
4	20-1160	Torsion Spring Clutch	1
5	8-9019	Clutch Rod (Incl. Ref. #66)	1
6	32146-2	Locknut	1
7	32144-15	Hex Hd. Thread Forming Screw	8
8	3-4244	Idler Pulley	1
9	3256-45	Flat Washer	2
10	323-29	Capscrew	1
11	32108-94	Screw Flat Head	4
12	20-1620	Bearing Friction Wheel	2
13	11-4640	Spring – Clutch Control	1
14	20-1580	Pivot Shaft	1
15	32144-11	Screw Thread Forming	13
16	3245-32	Set Screw	2
17	3296-29	Locknut	5
18	3256-23	Washer	4
19	36-9990	Bracket – Shaft Support	1
20	322-2	Capscrew	2
21	322-3	Capscrew	2
22	321-33	Capscrew	1

Ref. No.	Part No.	Description	No. Used
23	32121-6	Roll Pin	1
24	3-0737	Thrust Washer	5
25	26-6370	Spacer Drive Shaft	1
26	20-1080	Support Clutch Rod	1
27	322-8	Capscrew	2
28	26-6360	Frame Center	1
29	20-1760	Pivot Bracket	1
30	26-6380	Standoff Drive Shaft	2
31	32146-5	Locknut	6
32	20-1730	Bearing Axle	3
33	20-1550	Friction Plate	1
34	32152-4	Locknut	1
35	36-9980	Bearing – Pillow Block	1
36	5-9820	Sprocket	1
37	3-7384	Spacer	1
38	2710-6	Connecting Link	1
39	20-1810	Chain	1
40	20-1640	Gear & Bushing (Incl. Ref. #41)	1
41	3-1506	Bushing – Flanged	2
42	20-1430	Side Plate Traction	1
43	11-8140	Shoulder Screw	3
44	231-80	Tire	2
45	232-27	Valve Stem	2

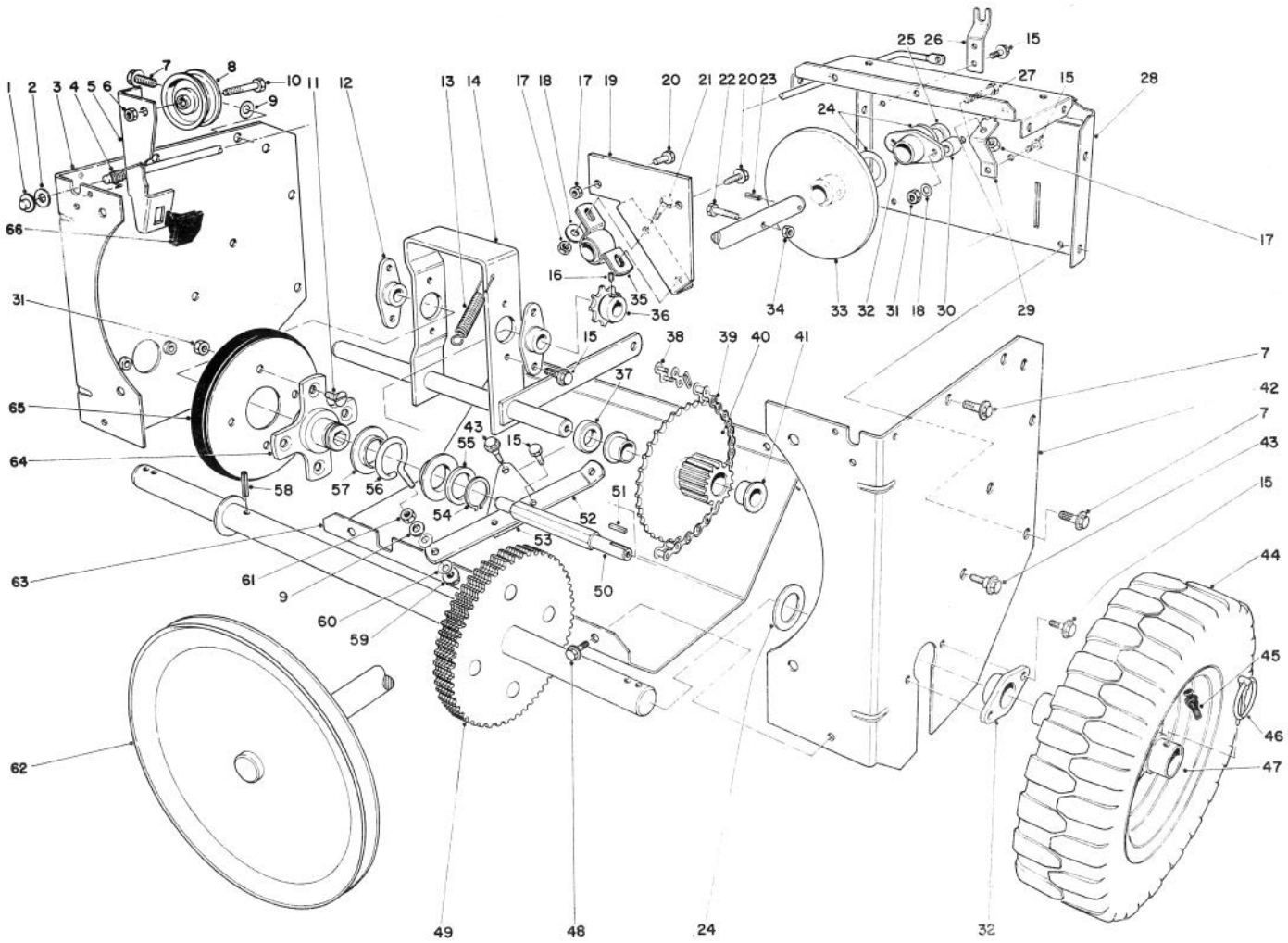

TRACTION ASSEMBLY (Continued)

Ref. No.	Part No.	Description	No. Used
46	3290-243	Klik Pin	2
47	20-1750	Wheel	2
48	32144-10	Screw Thread Forming	4
49	20-1680	Axle & Gear	1
50	20-1630	Shaft Friction Wheel	1
51	3-6168	Square Key	1
52	20-1780	Linkage Shift	1
53	20-1770	Pivot Plate	1
54	32151-36	Snap Ring	1
55	252-71	Thrust Bearing	1
56	11-8050	Slider Ring Collar	1
57	11-8080	Ring – Slider	2
58	32121-9	Roll Pin	1
59	32128-12	Flange Nut	1

Ref. No.	Part No.	Description	No. Used
60	3290-212	Spring Washer	2
61	32146-6	Nut	1
62	22-7930	Drive Shaft	1
63	20-1840	Lower Shield	1
64	20-3310	Hub – Traction Disc	1
65	40-8170	Friction Wheel	1
66	40-8140	Brake Pad – Molded	1
*†	20-9800	Tire Chain Kit (Optional)	1
*†	232-36	Tube (Optional)	2
*	8-8359	Loose Parts (Model 38040)	1
*	11-5679	Loose Parts (Model 38050)	1

†Optional Equipment
*Not Illustrated

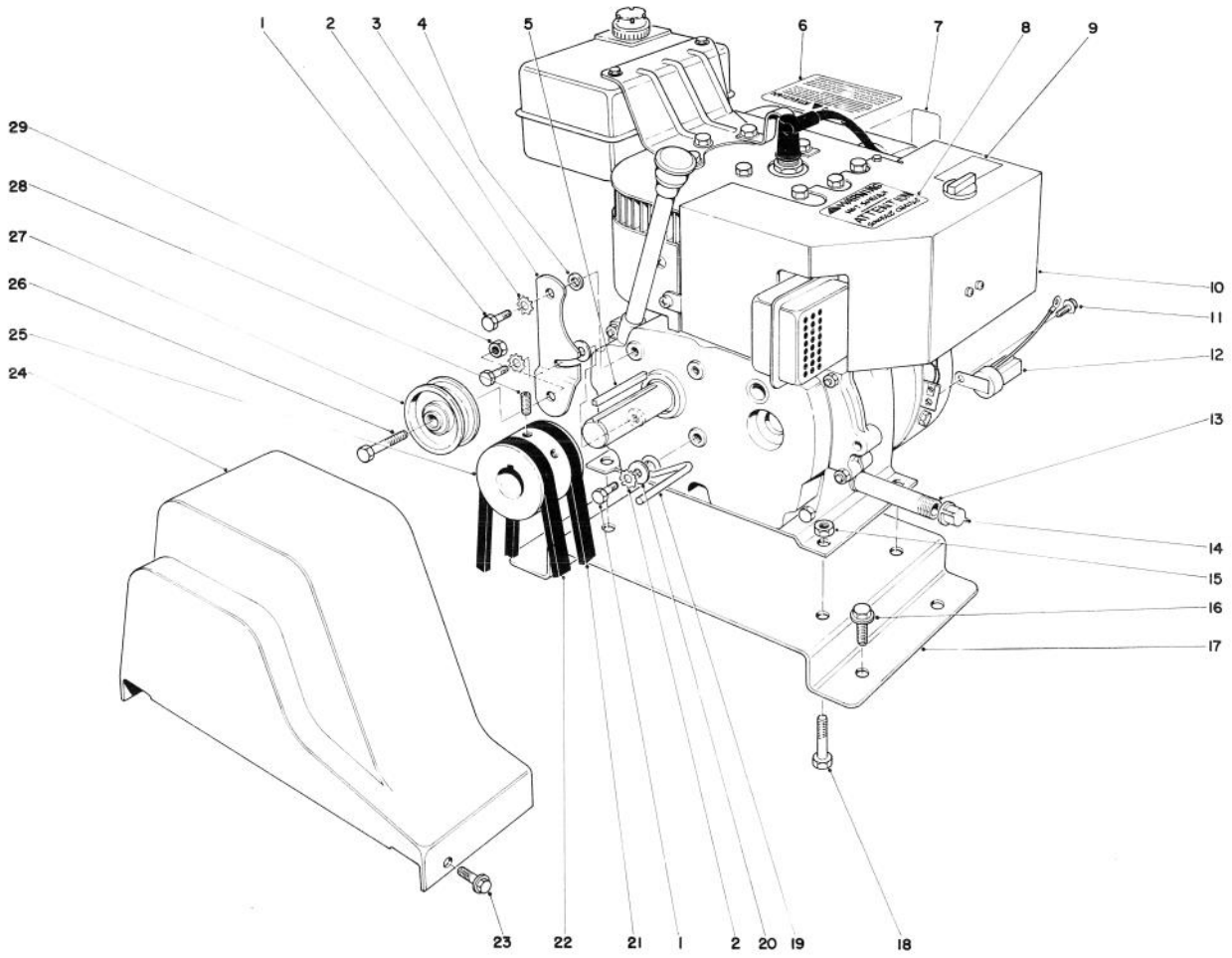

ENGINE ASSEMBLY

Ref. No.	Part No.	Description	No. Used
1	3210-3	Capscrew	3
2	3255-8	Lockwasher	3
3	20-1800	Idler Arm	1
4	40-8490	Spacer	1
5	5-0930	Key	1
6	41-8540	Decal – Hazards Caution	1
7	39-3860	Decal – Primer	1
8	29-6390	Decal – Hot Surface Warning	1
9	39-3840	Decal – Choke	1
10	221-674	Engine (Model 38040)	1
*	221-666	Engine (Model 38050)	1
*	221-704	Engine (Model 38050)	1
11	12-3270	Screw – Thread Forming	1
12	41-8600	Interlock Module	1
13	289-34	Pipe Nipple	1
14	288-2	Pipe Cap	1

Ref. No.	Part No.	Description	No. Used
15	3296-29	Locknut	4
16	32144-15	Hex Form Screw	4
17	25-5990	Plate – Engine Mounting	1
18	322-2	Capscrew	4
19	17-5530	Belt Retainer	1
20	3256-23	Washer	2
21	20-1820	V-Belt Traction	1
22	26-9670	V-Belt Auger	1
23	32144-10	Screw Thread Forming	2
24	20-1830	Belt Guard	1
25	21-4100	Pulley	1
26	323-29	Capscrew	1
27	3-4244	Idler Pulley	1
28	3246-14	Set Screw	2
29	32146-2	Locknut	1

*Not Illustrated

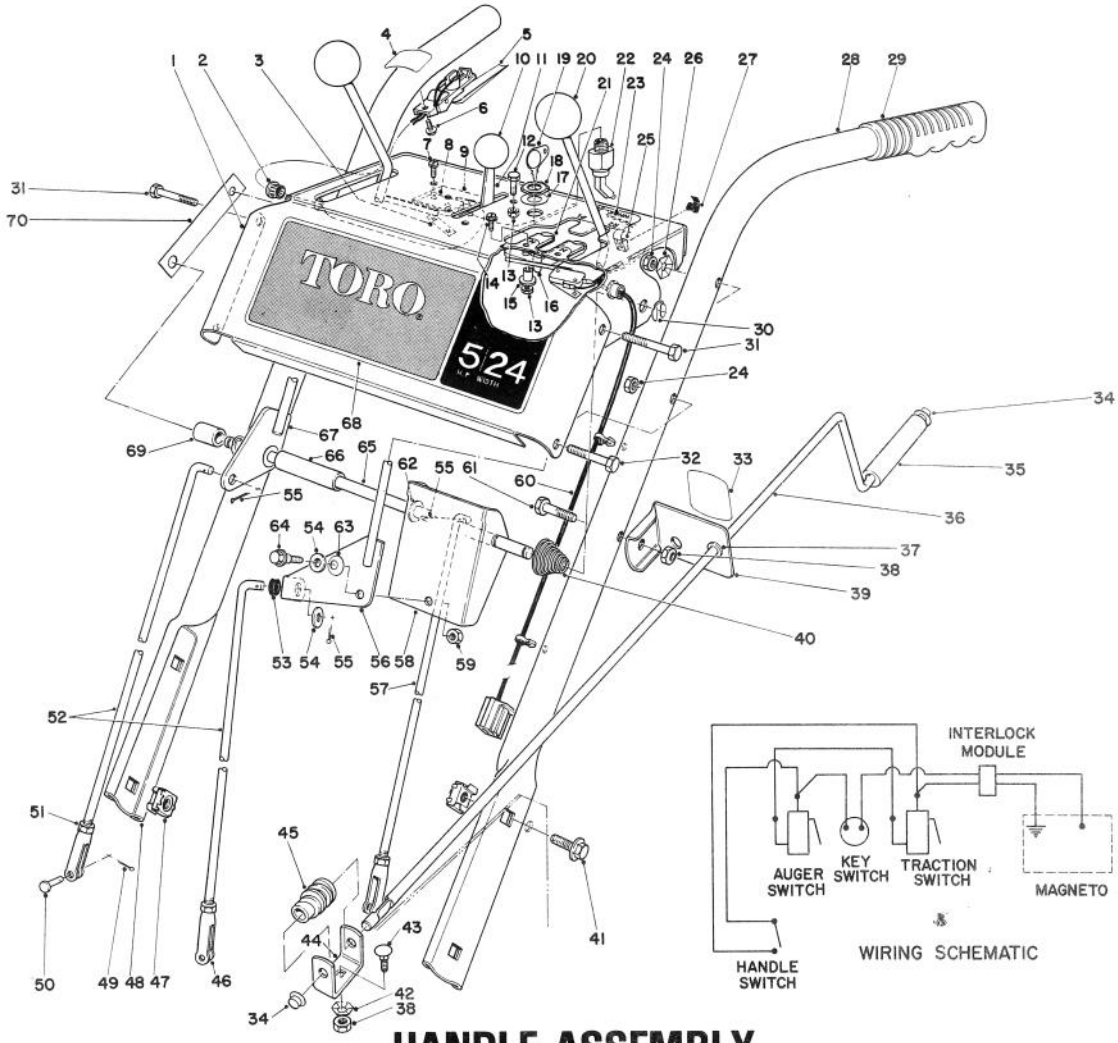

HANDLE ASSEMBLY

Ref. No.	Part No.	Description	No. Used
1	40-8470	Escutcheon Plate	1
2	237-130	Snap Bushing	1
3	3290-354	Clip	2
4	29-6360	Decal — Safety Interlock	1
5	40-9690	Interlock Handle & Switch	1
6	12-3270	Screw — Self Tapping	1
7	3290-313	Pan Head Machine Screw	4
8	40-8200	Micro Switch	2
9	22-7950	Switch Mounting Pad	1
10	233-36	Knob	1
11	40-8480	Throttle Control	1
12	32140-99	Hex Head Screw	2
13	32146-18	Locknut	4
14	3251-4	Machine Screw	2
15	22-9740	Spacer Interlock	2
16	22-9730	Spring Interlock	1
17	3254-5	Lockwasher	1
18	218-461	Hex Nut	1
19	33-2010	Key	2
20	233-21	Knob	2
21	22-9750	Slide Interlock	1
22	40-8240	On-Off Switch	1
23	29-6340	Decal — Instruction	1

Ref. No.	Part No.	Description	No. Used
24	32152-4	Locknut	4
25	43-7450	Wire Clamp	5
26	3290-257	Washer — Pyramidal	2
27	43-7460	Stud — Mounting	5
28	25-6040	Handle — Left	1
29	6-0450	Handle Grip	2
30	32151-43	Klip Ring	2
31	321-11	Capscrew	3
32	321-9	Capscrew	1
33	29-6370	Decal — Chute Direction	1
34	3290-320	Push-On Speed Nut	2
35	40-8230	Chute Control Grip	1
36	40-8380	Rod — Chute Control	1
37	256-249	Nyliner	1
38	3296-29	Locknut	2
39	6-3069	Chute Control Rod Mounting (Incl. Ref. #33 & 37)	1
40	17-5630	Spring — Conical	1
41	3234-1	Hex Flange Screw	4
42	3290-238	Washer Pyramidal	1
43	3230-2	Carriage Bolt	1
44	40-8280	Worm Bracket	1
45	40-8250	Worm — Chute	1

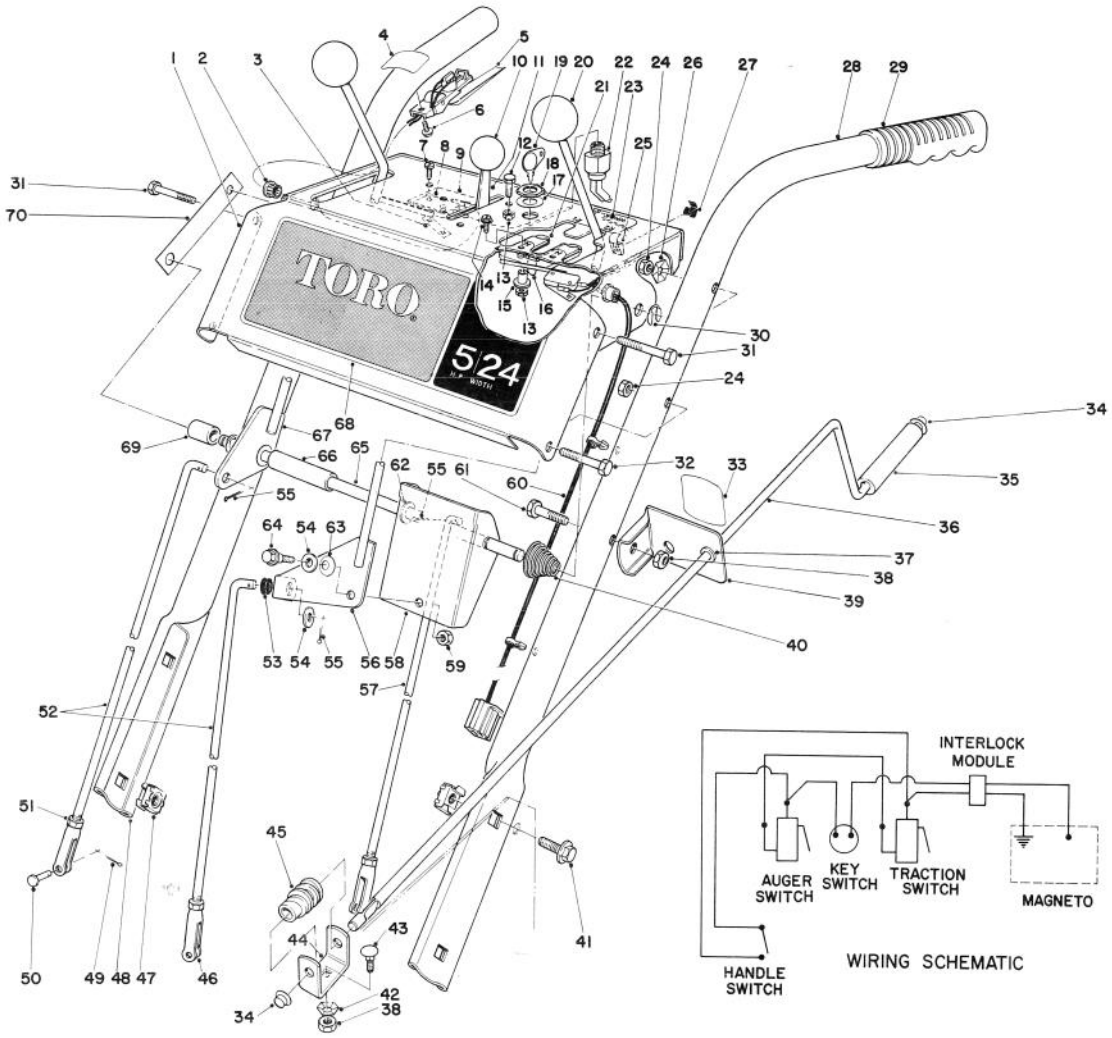

HANDLE ASSEMBLY (Continued)

Ref. No.	Part No.	Description	No. Used
46	40-8180	Clevis	3
47	3290-398	Retainer Nut	4
48	40-8430	Handle – Right	1
49	3272-5	Cotter Pin	3
50	283-1	Clevis Pin	3
51	3220-3	Jam Nut	3
52	20-1980	Control Rod – Speed Select	2
53	237-89	Rubber – Grommet	1
54	3256-24	Washer	2
55	3272-6	Cotter Pin	3
56	20-2020	Shift Lever	1
57	20-1970	Control Rod – Traction	1
58	20-2010	Bracket – Shift	1
59	32152-1	Locknut	1

Ref. No.	Part No.	Description	No. Used
60	40-8630	Wire Harness – Interlock	1
61	322-9	Capscrew	1
62	3256-25	Washer	2
63	3290-213	Spring Washer	1
64	11-8140	Shoulder Screw	1
65	20-1910	Pivot Rod	1
66	28-5660	Spacer – Shift Lever	1
67	20-1920	Lever	1
68	22-9720	Decal – Escutcheon (Model 38040)	1
*	22-9760	Decal – Escutcheon (Model 38050)	1
69	28-5670	Spacer – Auger Lever	1
70	25-9760	Strap – Escutcheon Support	1

*Not Illustrated

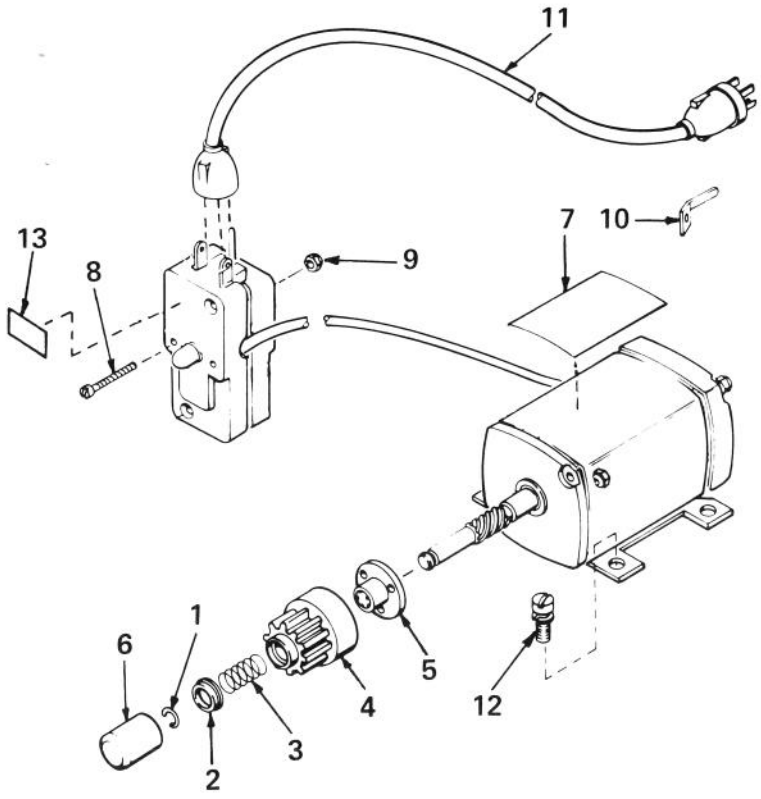

STARTER MOTOR KIT-MODEL 38-7590 (Optional)

Ref. No.	Part No.	Description	No. Used
1†	33842	Ring, Retainer	1
2†	33430	Retainer, Spring	1
3†	33431	Spring, Anti-drift	1
4†	33432	Gear	1
5†	33433	Nut, Engaging	1
6†	33451	Cover, Dust	
7†	34179	Decal	1

Ref. No.	Part No.	Description	No. Used
8†	650741	Screw, Pan Hd.	1
9†	650742	Nut & Lockwasher	1
10†	32704	Clip	1
11†	32450A	Cord, Extension (10'6")	1
12†	30063	Screw, Fil. Hd. Sems	1
13†	34161	Decal — Instruction	1

†Note: Obtain individual replacement parts from your local Tecumseh Dealer.

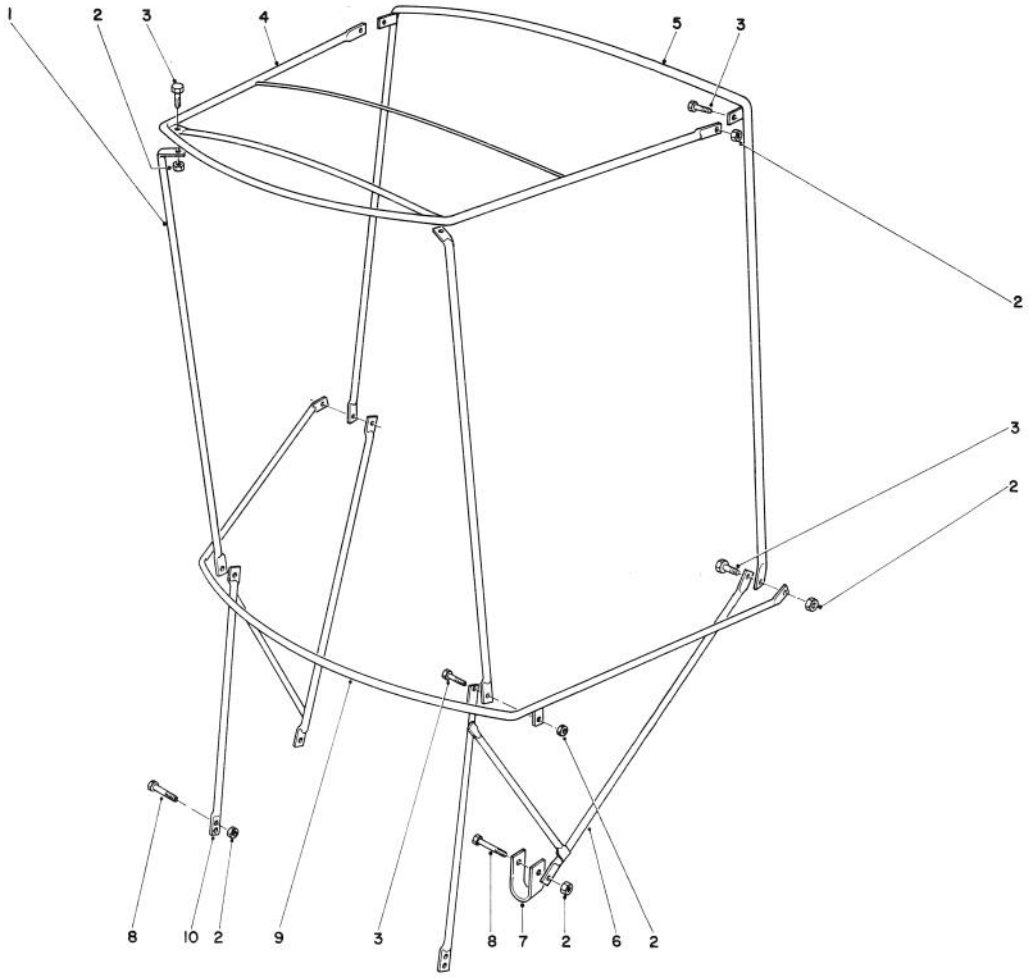

SNOW CAB ASSEMBLY MODEL 42-3380 (Optional)

Ref. No.	Part No.	Description	No. Used
1	12-8040	Front Corner Post	2
2	32146-17	Locknut	12
3	321-4	Capscrew	8
4	12-8010	Top Frame	1
5	12-8030	Rear Vertical Bow	1
6	42-4060	Attaching Bracket L.H.	1

Ref. No.	Part No.	Description	No. Used
7	12-8050	"U" Clamp	2
8	321-11	Capscrew	4
9	12-8020	Horizontal Curved Bow	1
10	42-4050	Attaching Bracket R.H.	1
*	42-4070	Vinyl Cover	1

*Not Illustrated

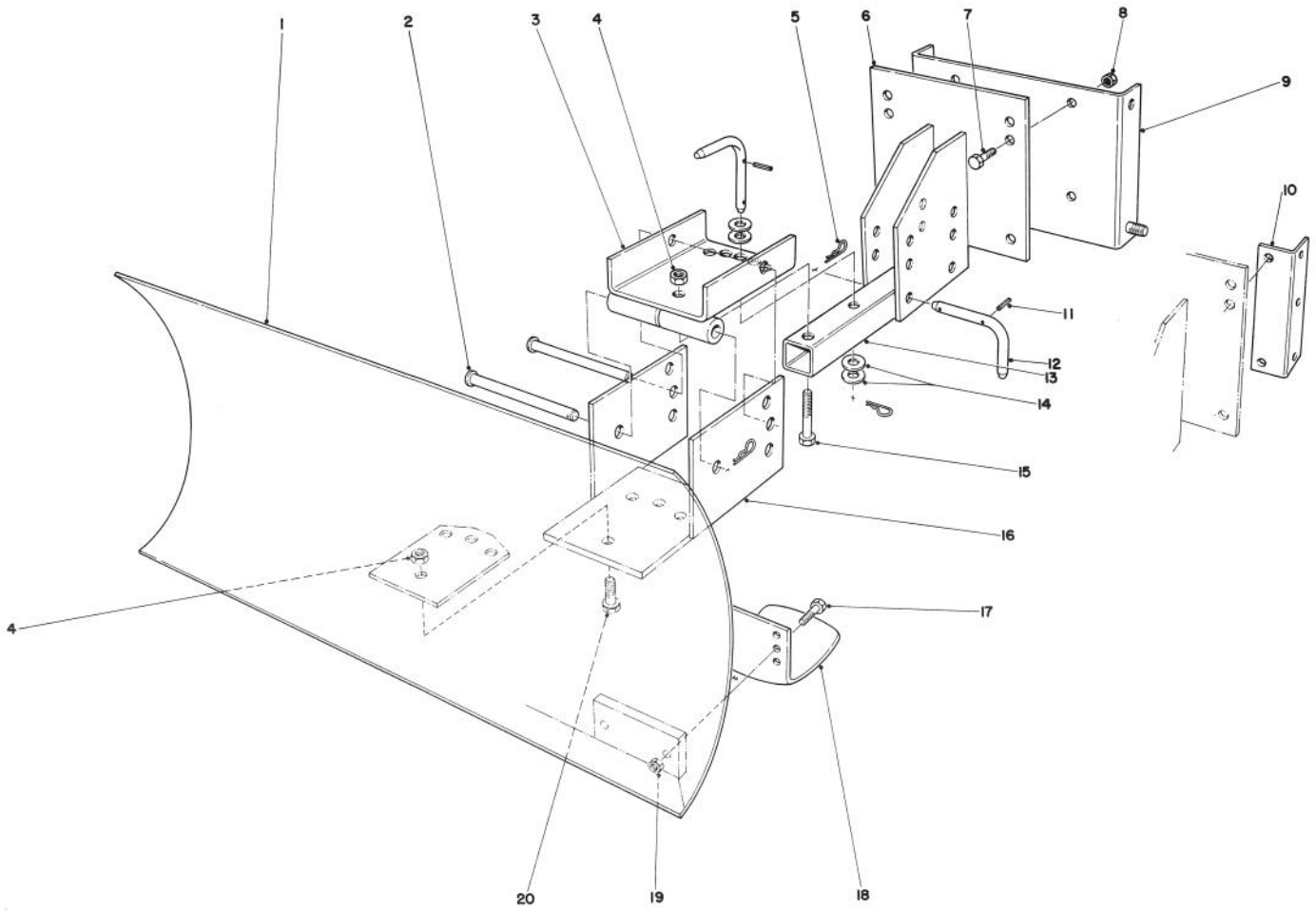

GRADER BLADE ASSEMBLY MODEL 59099 (Optional)

Ref. No.	Part No.	Description	No. Used
1	7-4374	Blade	1
2	283-38	Clevis Pin	2
3	20-5090	Swivel Bracket	1
4	32152-3	Locknut	5
5	3290-322	Hairpin Cotter	5
6	20-5170	Mounting Plate	1
7	323-6	Capscrew	4
8	32152-2	Locknut	4
9	22-4920	Mounting Plate (Used with 826 & 1132 Units only)	1
10	39-7850	Mounting Rail (Used with 3521, 421 & 521 Units only)	2

Ref. No.	Part No.	Description	No. Used
11	32121-45	Roll Pin	3
12	20-5210	Pivot Pin (Incl. Ref. #11)	3
13	20-5140	Tongue Blade	1
14	3256-5	Flat Washer	4
15	325-11	Capscrew	1
16	20-5130	Blade Adjustment Plate	1
17	322-6	Capscrew	4
18	7-1023	Skid	2
19	32152-1	Locknut	4
20	325-5	Capscrew	4
*	20-9950	Air Cleaner Kit – (Tecumseh)	1

*Not Illustrated

ENGINE, TECUMSEH MODEL NO. H50-65440M

(5 H.P. SNOWTHROWER MODEL NO. 38040)

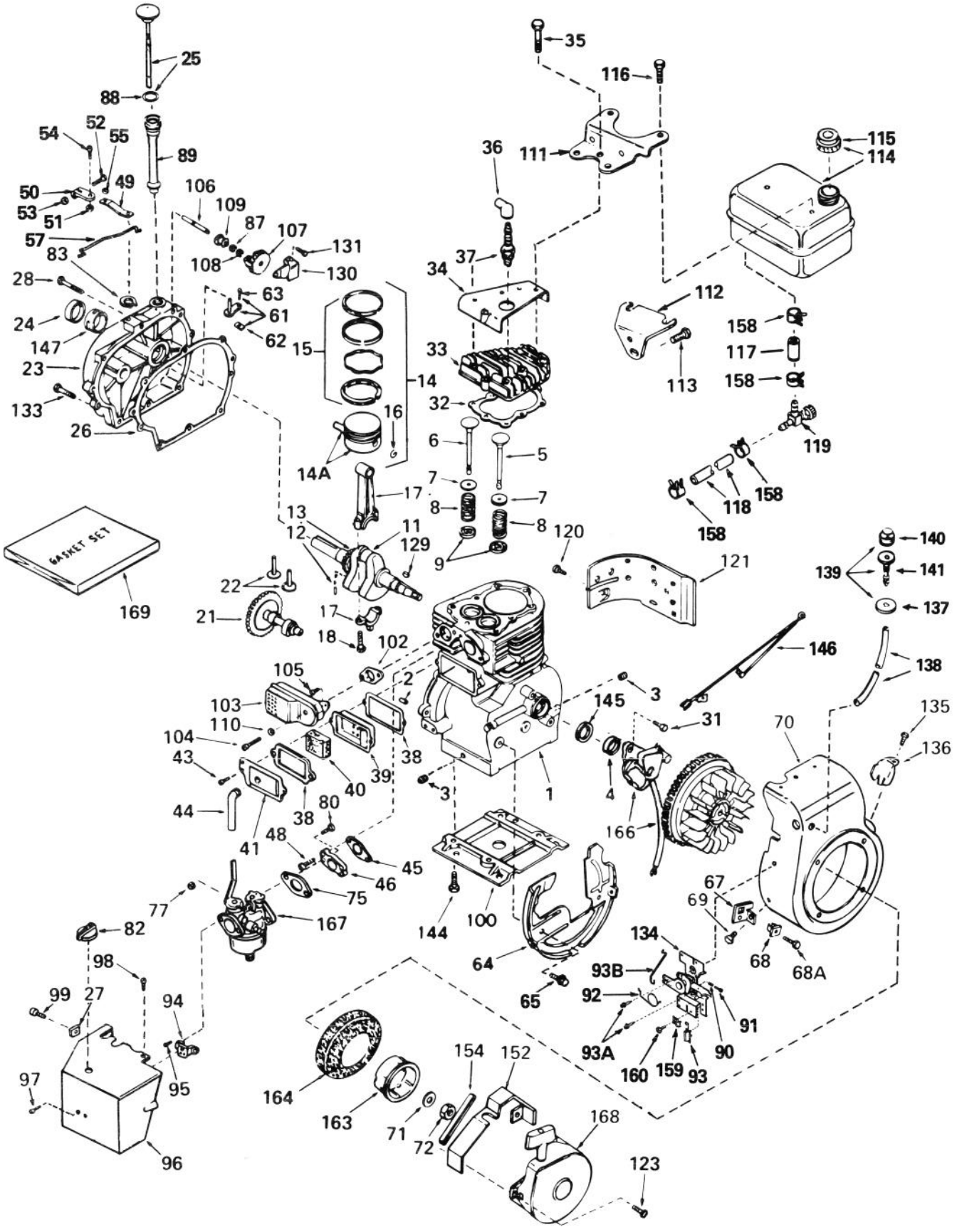

ENGINE, TECUMSEH MODEL NO. H50-65440M
(5 H.P. SNOWTHROWER MODEL NO. 38040)

Ref. No.	Part No.	Description	No. Used
1	33311B	Cylinder Assy. (Incl. Ref. # 2, 3, 4 & 5)	1
2	27652	Pin, Dowel	2
3	27642	Plug, (Oil Drain)	2
4	27876B	Seal, Oil	1
5	32783	Valve, Intake (Std.) (Incl. Ref. #9)	1
5	32784	Valve, Intake (1/32" oversize) (Incl. Ref. #9)	1
6	27878A	Valve, Exhaust (Std.) (Incl. Ref. #9)	1
6	27880A	Valve, Exhaust (1/32" oversize) (Incl. Ref. #9)	1
7	27882	Cap, Upper Valve Spring	2
8	27881	Spring, Valve	2
9	32581	Cap, Lower Valve Spring	2
11	30813	Crankshaft Assy. (Incl. Ref. #12 & 13)	1
12	29783	Pin, Crankshaft Gear	1
13	27884	Gear, Crankshaft	1
14	34531	Piston, Pin & Ring Assy. (Incl. Ref. #14A, 15 & 16) (Std.)	1
14	34532	Piston, Pin & Ring Assy. (Incl. Ref. #14A, 15 & 16) (.010 oversize)	1
14	34533	Piston, Pin & Ring Assy. (Incl. Ref. #14A, 15 & 16) (.020 oversize)	1
14A	33312B	Piston & Pin Assy. (Incl. Ref. #16) (Std.)	1
14A	33313B	Piston & Pin Assy. (Incl. Ref. #16)(.010 oversize)	1
14A	33314B	Piston & Pin Assy. (Incl. Ref. #16)(.020 oversize)	1
15	33315	Ring Set, Piston (Std.)	1
15	33316	Ring Set, Piston (.010 oversize)	1
15	33317	Ring Set, Piston (.020 oversize)	1
16	27888	Ring, Piston Pin Retaining	2
17	31295C	Rod Assy., Connecting (Incl. Ref. #18)	1
18	650662B	Bolt, Connecting Rod	2
21	33156	Camshaft (Compression Release)	1
22	34034	Lifter, Valve	2
23	31303B	Cover, Cylinder (Incl. Ref. #24, 106 & 147)	1
24	28427	Seal, Oil	1
25	34011A	Dipstick, Oil (Incl. Ref. #88)	1
26	*30684	Gasket, Cylinder Cover	1
27	650764	Nut, "U" Type	1
28	650488	Screw, Hex Hd.	7
31	650489	Screw, Hex Hd.	2
32	*28938B	Gasket, Cylinder Head	1
33	30938A	Head, Cylinder (Includes 3 of Ref. #35)	1
34	30939A	Cover, Cylinder Head	1
35	650697A	Screw, Hex Flange Hd.	8
36	610118	Cover, Spark Plug	1
37	33636	Plug, Spark (Champion J-8 or equivalent) Except for Canada	1
37	34251 Canada	Resistor Spark Plug (Canadian Regulations Require RJ-17LM Resistor Spark Plug)	1
38	*27896	Gasket, Valve Spring Cover	2
39	28423	Body Assy., Breather	1
40	28424	Element, Breather	1
41	28425	Cover, Valve Spring	1
43	650128	Screw, Fil. Hd.	2
44	27627	Tube, Breather	1
45	*27915	Gasket, Intake	1
46	30195A	Flange, Carburetor (Incl. Ref. #77 & 80)	1
48	30196	Screw, Fil. Hd.	2
49	33454	Lever, Governor	1
50	29916	Clamp, Governor Lever	1
51	30322	Nut & Lockwasher Assy.	1
52	29826	Screw, Hex Washer Hd.	1
53	29216	Locknut	1
54	650548	Screw, Hex Washer Hd.	1
55	29918	Lockwasher	1
57	34661	Link, Governor	1
61	30699C	Rod Assy., Governor (Incl. Ref. #62 & 63)	1
62	30700	Yoke, Governor	1
63	650494	Screw, Fil. Hd.	1
64	29536	Baffle, Blower Housing	1
65	650561	Screw, Hex Washer Hd.	2
67	34126	Bracket, Grommet Mounting	1
68	28545	Grommet, Plastic	1
68A	650643	Screw, Pan Hd. Self-tap	1
69	29747A	Screw, Hex Hd.	2
70	32158D	Housing, Blower (Incl. Ref. #135 & 136)	1
71	650490	Washer, Belleville	1
72	8116	Nut, Flywheel	1
75	*31688	Gasket, Carburetor	1
77	29752	Nut & Lockwasher Assy.	2
80	650572	Screw, Flat Hd.	2
82	34585	Knob, Control	1
83	29642	Ring, Retaining	1
87	30590A	Washer, Flat	1
88	33590	"O" Ring	1
89	33893A	Tube, Oil Fill	1
90	31342	Spring Compression	1
91	650549	Screw, Fil. Hd.	1
92	34663	Spring, Speed Control	1
93	610973	Terminal Assy.	1
93A	650821	Screw, Hex Washer Hd. Thread Cutting	2
93B	34662	Link, Throttle	1

ENGINE, TECUMSEH MODEL NO. H50-65440M (Continued)
(5 H.P. SNOWTHROWER MODEL NO. 38040)

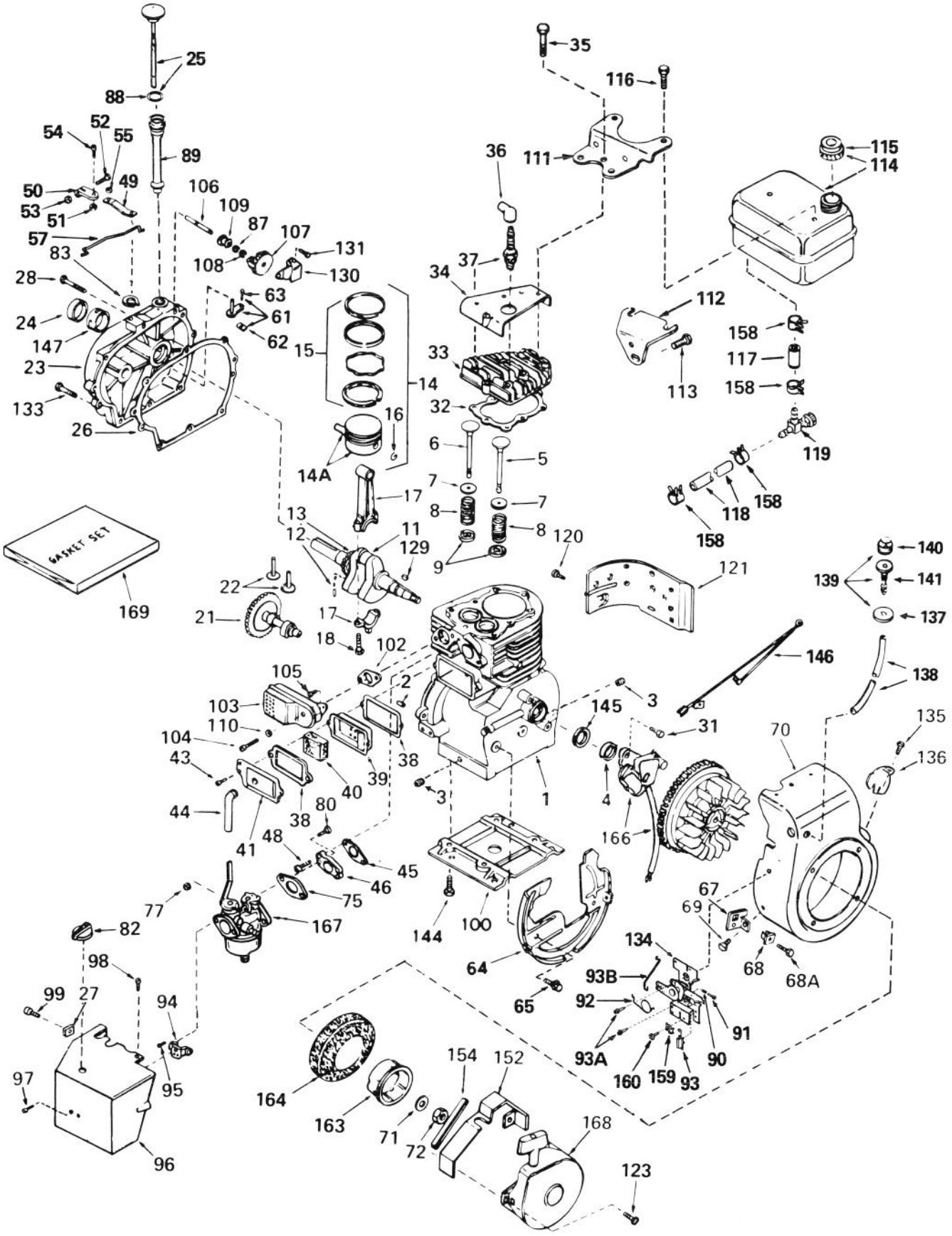

ENGINE, TECUMSEH MODEL NO. H50-65440M (Continued)
(5 H.P. SNOWTHROWER MODEL NO. 38040)

Ref. No.	Part No.	Description	No. Used
94	32398	Bracket, Choke	1
95	28820	Screw, Fil. Hd.	2
96	34672	Cover, Carburetor	1
97	650257	Screw, Pan Hd.	2
98	650765	Screw, Hex Washer Hd. Self-Drilling	1
99	650760	Screw, Pan Hd.	1
100	29538	Base, Engine Mounting	1
102	*27930	Gasket, Muffler	1
103	32401	Muffler	1
104	650694A	Screw, Hex Flange Hd.	1
105	30196	Screw, Fil. Hd.	1
106	31845	Shaft, Mechanical Governor	1
107	30591	Gear Assy., Governor	1
108	29193	Ring, Retaining	1
109	20588A	Spool, Governor	1
110	26073	Washer	1
111	33166A	Plate, Fuel Tank Mounting	1
112	33167	Bracket, Fuel Tank Mounting	1
113	650561	Screw, Hex Washer Hd.	1
114	33120	Tank, Fuel (Incl. Ref. #115 & 116)	1
115	30998B	Cap, Fuel Tank	1
116	650665	Screw, Hex Washer Hd. Self-tap	2
117	30962	Line, Fuel	1
118	29774	Line, Fuel	1
119	32961	Valve, Shut-off	1
120	650128	Screw, Fil. Hd.	1
121	30622	Extension, Blower Housing	1
123	29716	Screw, Pan Hd.	4
129	30884	Key, Flywheel	1
130	31843A	Bracket, Governor Gear	1
131	28763	Screw, Hex Washer Hd.	2
133	650493	Screw, Hex Hd.	1

Ref. No.	Part No.	Description	No. Used
134	34664	Control Assy., Remote Speed (Incl. Ref. #90 thru 93)	1
135	650760	Screw, Pan Hd.	1
136	33013	Cover, Starter Bubble	1
137	32312	Retainer, Primer Bulb	1
138	32180B	Line, Primer	1
139	32182	Primer Assy. (Incl. Ref. #137, 140 & 141)	1
140	32183	Bulb, Primer	1
141	32184	Body, Primer	1
144	650542	Screw, Hex Hd.	4
145	33876	Gasket, Stator	1
146	34240	Wire, Ground	1
147	31546	Bushing, Crankshaft	1
152	34127	Guard, Starter	1
154	32576	Seal, Snow Guard	1
158	26460	Clamp, Fuel Line	4
159	27793	Clip, Conduit	1
160	28942	Screw, Hex Washer Hd.	1
163	32125	Cup, Starter	1
164	590417	Screen, Starter Cup	1
166	610694A	Magneto (The complete magneto is not available as an assembly. The magneto number is shown for reference purposes only. Order component parts individually as shown in parts list.)	1
167	631927	Carburetor (Incl. Ref. #75)	1
168	590473	Starter Assy., Rewind	1
169	33235	Gasket Set (Incl. Items Marked *)	1

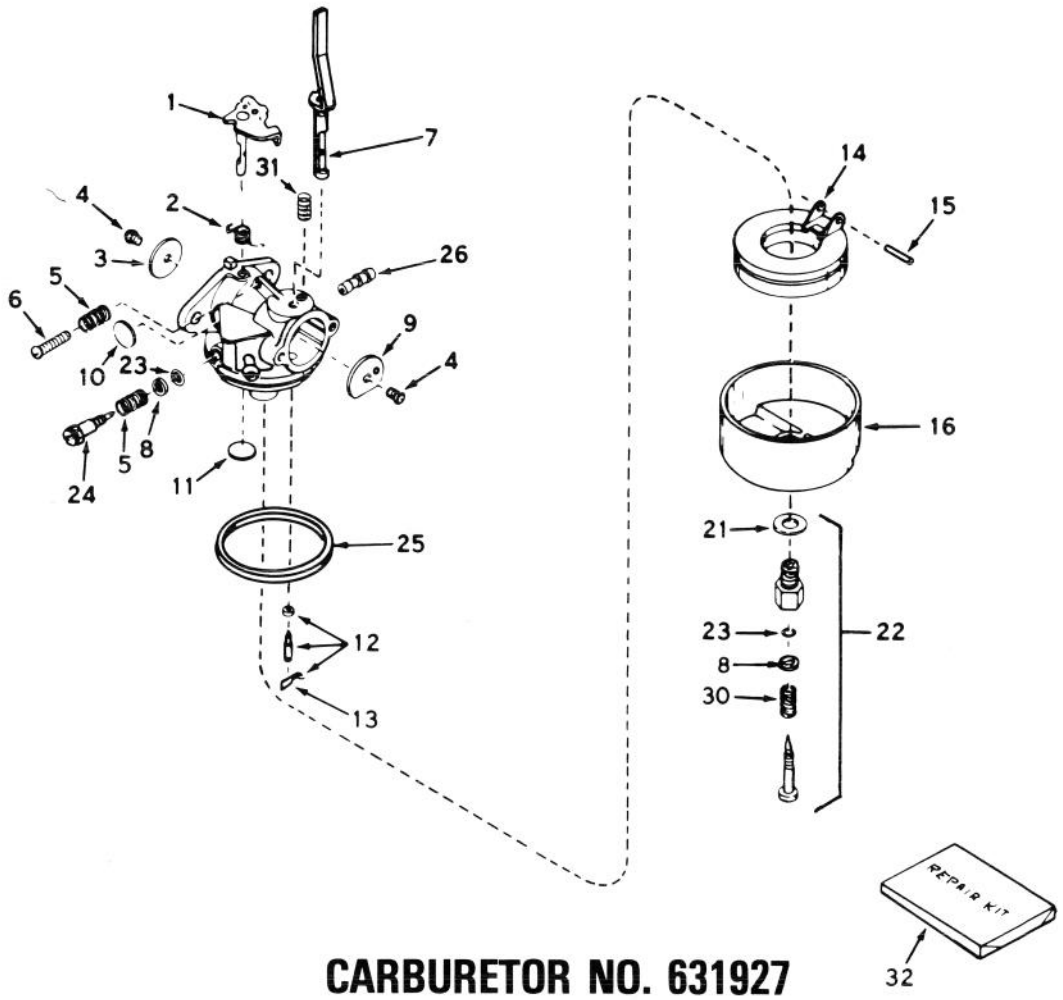

CARBURETOR NO. 631927

(5 H.P. SNOWTHROWER MODEL NO. 38040)

Ref. No.	Part No.	Description	No. Used
1	31834	Shaft & Lever Assy., Throttle	1
2	630731	Spring, Throttle Return	1
3	631036	Shutter, Throttle	1
4	650506	Screw	2
5	630766	Spring, Idler Regulating Screw	2
6	650417	Screw, Idle Regulating	1
7	631913	Shaft & Lever Assy., Choke	1
8	630739	Washer, Flat	2
9	631815	Shutter, Choke	1
10	*630748	Plug, Welch	1
11	*631027	Plug, Welch	1
12	*631021	Inlet Needle, Seat & Clip Assy. (Incl. Ref. #13)	1
13	631022	Clip, Inlet Needle	1

Ref. No.	Part No.	Description	No. Used
14	632019	Float, Carburetor	1
15	*631024	Shaft, Float	1
16	631867	Bowl, Float	1
21	27110	Gasket, Bowl-to-body	1
22	*31839	Adjustment Screw Assy., Main (Incl. Ref. #8, 21, 23 & 30)	1
23	*630740	"O" Ring, Adjustment Screw	2
24	*631078	Screw, Idle Adjustment	1
25	*631028	Gasket, Bowl-to-body	1
26	631803	Fitting, Fuel Inlet	1
30	630738	Spring, Main Adjustment Screw	1
31	630735	Spring, Choke Stop	1
32	31840	Repair Kit (Incl. Items Marked *)	1

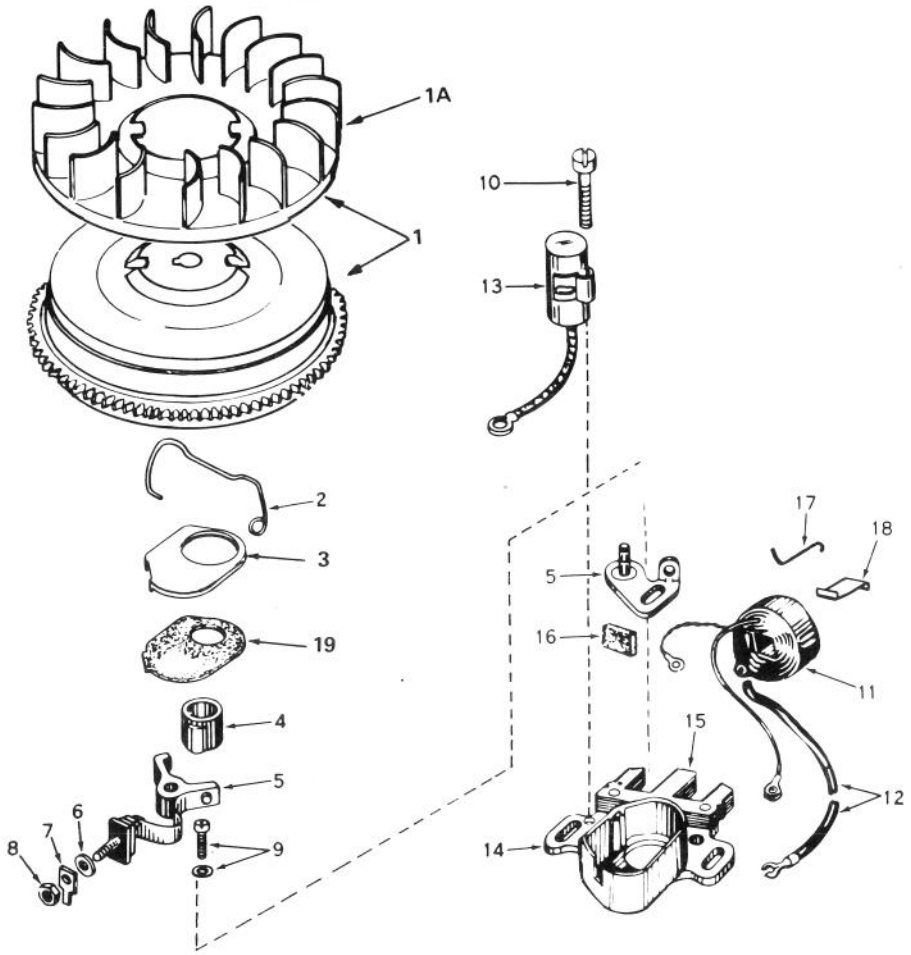

MAGNETO NO. 610694A

(5 AND 7 H.P. SNOWTHROWER MODEL NOS. 38040 AND 38050)

Ref. No.	Part No.	Description	No. Used
1	30811A	Flywheel (Incl. Ref. #1A)	1
1A	610934	Fan	1
2	30551	Spring, Breaker Box	1
3	610947	Cover, Breaker Box Dust	1
4	30992	Cam, Breaker	1
5	30547A	Contact Assy., Breaker	1
6	610385	Washer, Terminal	1
7	33356	Tab, Ground Terminal	1
8	610408	Nut, Terminal	1
9	29181	Screw & Washer, Breaker	1
10	610593	Screw, Condenser Fastening	1
11	30560A	Coil Assy. (Incl. Ref. #12)	1
12	30554	Wire, Lead	1
13	30548B	Condenser	1
14	30545	Core & Plate	1

Ref. No.	Part No.	Description	No. Used
15	30561B	Stator Assy. (Incl. Ref. #2, 3, 5 thru 14 & 16 thru 19)	1
16	30549	Felt, Cam Wiper	1
17	31311	Clip, Coil Locking	1
18	29629	Spring, Coil Wedge	1
19	610955	Gasket, Dust Cover	1

*The complete magneto is not available as an assembly. The magneto number is shown for reference purposes only. Order component parts individually, as shown in parts list.

ENGINE, TECUMSEH MODEL NO. H70-130176F

(7 H.P. SNOWTHROWER MODEL NO. 38050)

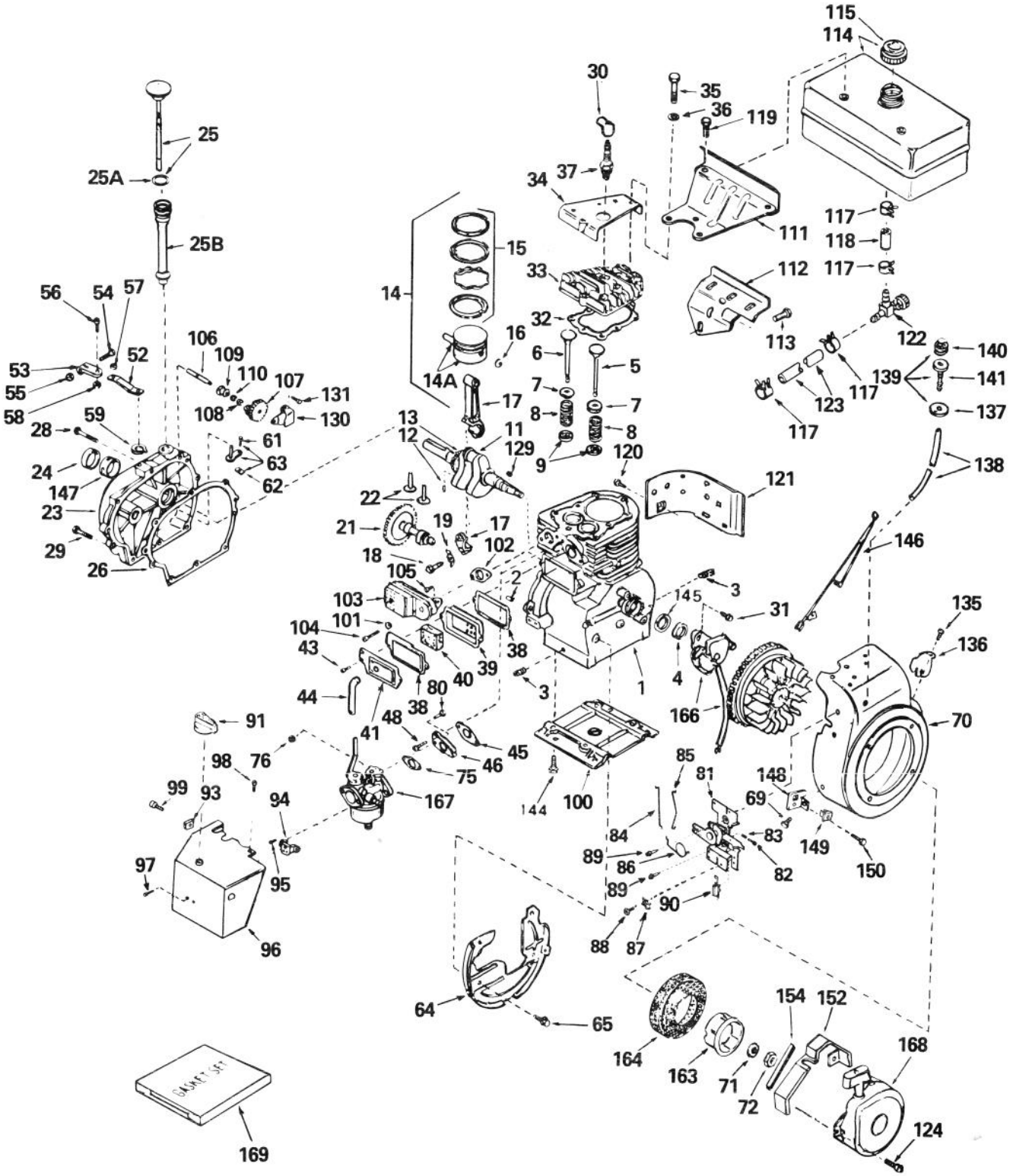

ENGINE, TECUMSEH MODEL NO. H70-130176F
(7 H.P. SNOWTHROWER MODEL NO. 38050)

Ref. No.	Part No.	Description	No. Used
1	32586B	Cylinder Assy. (Incl. Ref. #2, 3 & 4)	1
2	27652	Pin, Dowel	2
3	27642	Plug, Sq. Hd. Pipe (Oil Drain)	2
4	32630	Seal, Oil	1
5	32783	Valve, Intake (Std.) (Incl. Ref. #9)	1
5	32784	Valve, Intake (1/32" Oversize) (Incl. Ref. #9)	1
6	27878A	Valve, Exhaust (Std.) (Incl. Ref #9)	1
6	27880A	Valve, Exhaust (1/32" Oversize) (Incl. Ref. #9)	1
7	27882	Cap, Upper Valve Spring	2
8	27881	Spring, Valve	2
9	32581	Cap, Lower Valve Spring	2
11	32587	Crankshaft Assy. (Incl. Ref #12 & 13)	1
12	29783	Pin, Crankshaft Gear	1
13	27884	Gear, Crankshaft	1
14	34517	Piston, Pin & Ring Assy. (Incl. Ref. #14A, 15 & 16) (Std.)	1
14	34518	Piston, Pin & Ring Assy. (Incl. Ref. #14A, 15 & 16) (.010 Oversize)	1
14	34519	Piston, Pin & Ring Assy. (Incl. Ref. #14A, 15 & 16) (.020 Oversize)	1
14A	32592B	Piston & Pin Assy. (Incl. Ref. #16) (Std.)	1
14A	32593B	Piston & Pin Assy. (Incl. Ref. #16) (.010 Oversize)	1
14A	32594B	Piston & Pin Assy. (Incl. Ref. #16) (.020 Oversize)	1
15	32595	Ring Set, Piston (Std.)	1
15	32596	Ring Set, Piston (.010 Oversize)	1
15	32597	Ring Set, Piston (.020 Oversize)	1
16	27888	Ring, Piston Pin Retaining	2
17	32591C	Rod Assy., Connecting (Incl. Ref #18 & 19)	1
18	650662B	Screw, Connecting Rod	2
19	34242	Dipper, Oil	1
21	32115	Camshaft (Mech. Compression Release)	1
22	34034	Lifter, Valve	2
23	31303B	Cover, Cylinder (Incl. Ref. #24, 106, & 147)	1
24	28427	Seal, Oil	1
25	34011A	Dipstick, Oil (Incl. Ref. #25A)	1

Ref. No.	Part No.	Description	No. Used
25A	33590	"O" Ring	1
25B	33893A	Tube, Oil Fill	1
26	*30684	Gasket, Cylinder Cover	1
28	650488	Screw, Hex Hd.	7
29	650493	Screw, Hex Hd.	1
30	610118	Cover, Spark Plug	1
31	650489	Screw, Hex Hd.	2
32	*32631	Gasket, Cylinder Head	1
33	30938A	Head, Cylinder (Incl. 3 of Ref. #35)	1
34	30939A	Cover, Cylinder Head	1
35	650697A	Screw, Hex Flange Hd.	8
36	650691	Washer, Flat	1
37	33636	Plug, Spark (Champion J-8 or equivalent) Except for Canada	1
37	34251 Canada	Resistor Spark Plug (Canadian Regulations require RJ-17LM Resistor spark plug.)	1
38	*27896	Gasket, Valve Spring Cover	2
39	28423	Body Assy., Breather	1
40	28424	Element, Breather	1
41	28425	Cover, Valve Spring	1
43	650128	Screw, Fil. Hd.	2
44	27627	Tube, Breather	1
45	*27915	Gasket, Intake	1
46	30195A	Flange, Carburetor (Incl. Ref. #76 & 80)	1
48	30196	Screw, Fil. Hd.	2
52	33454	Lever, Governor	1
53	29916	Clamp, Governor Lever	1
54	29826	Screw, Hex Washer Hd.	1
55	29216	Nut, Lock	1
56	650548	Screw, Hex Washer Hd.	1
57	29918	Washer, Lock	1
58	30322	Nut & Lockwasher	1
59	29642	Ring, Retaining	1
61	650494	Screw, Fil. Hd.	1
62	30700	Yoke, Governor	1
63	30699C	Rod Assy., Governor (Incl. Ref. #61 & 62)	1
64	29536	Baffle, Blower Housing	1
65	650561	Screw, Hex Washer Hd.	2
69	29747A	Screw, Hex Hd.	2
70	32158D	Housing, Blower (Incl. Ref. #135 & 136)	1
71	650490	Washer, Belleville	1
72	8116	Nut, Crankshaft	1
75	*31688	Gasket, Carburetor	1
76	29752	Nut & Lockwasher Assy.	2
80	650572	Screw, Flat Hd.	2
81	34664	Control Assy., Speed (Incl. Ref #82, 83, 86 & 90)	1

ENGINE, TECUMSEH MODEL NO. H70-130176F (Continued)

(7 H.P. SNOWTHROWER MODEL NO. 38050)

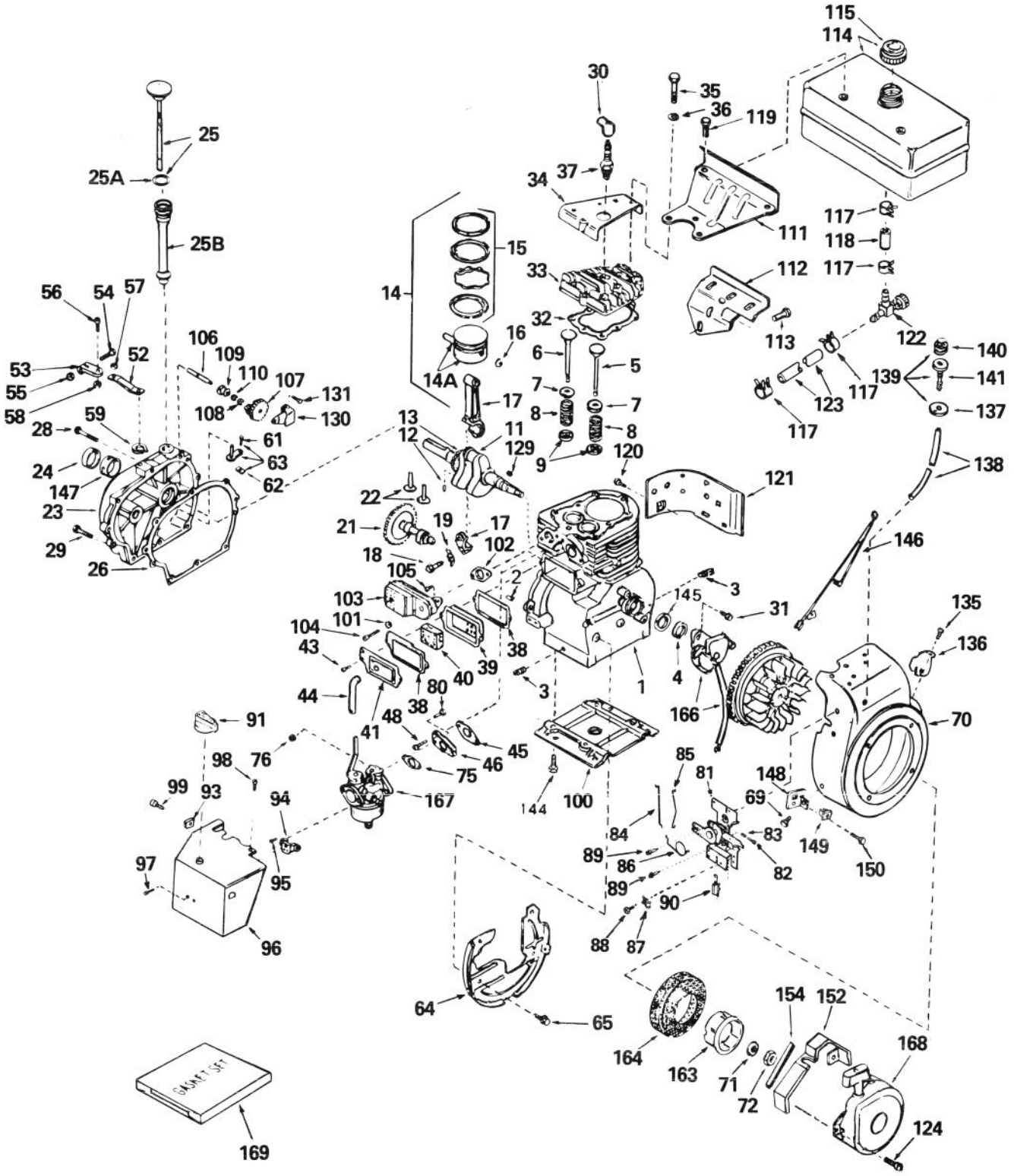

ENGINE, TECUMSEH MODEL NO. H70-130176F (Continued)
(7 H.P. SNOWTHROWER MODEL NO. 38050)

Ref. No.	Part No.	Description	No. Used
82	650549	Screw, Fil. Hd	1
83	31342	Spring, Compression	1
84	34661	Link, Governor	1
85	34662	Link, Throttle	1
86	34663	Spring, Speed Control	1
87	27793	Clip, Conduit	1
88	28942	Screw, Hex Washer Hd.	1
89	650821	Screw, Hex Washer Hd. Thread Cutting	2
90	610973	Terminal Assy.	1
91	34585	Knob, Control	1
93	650764	Nut, "U" Type	1
94	32398	Bracket, Carburetor Cover	1
95	28820	Screw, Fil. Hd.	2
96	34672	Cover, Carburetor	1
97	650257	Screw, Pan Hd.	2
98	650765	Screw, Hex Washer Hd. Self-Drilling	1
99	650760	Screw, Pan Hd.	1
100	29538	Base, Engine Mounting	1
101	26073	Washer, Flat	1
102	*27930	Gasket, Muffler	1
103	32401	Muffler	1
104	650694A	Screw, Hex Flange Hd.	1
105	30196	Screw, Fil. Hd.	1
106	31845	Shaft, Mechanical Governor	1
107	30591	Gear Assy., Governor (Incl. Ref. #110)	1
108	29193	Ring, Retaining	1
109	30588A	Spool, Governor	1
110	30590A	Washer, Flat	1
111	34159	Plate, Fuel Tank Mounting	1
112	34158	Bracket, Fuel Tank Mounting	1
113	650561	Screw, Hex Washer Hd.	1
114	34186	Tank Assy., Fuel (Incl. Ref. #115)	1
115	30998B	Cap, Fuel	1
117	26460	Clamp, Fuel Line	4
118	30962	Line, Fuel	1
119	650665	Screw, Hex Washer Hd. Self-Tap	2
120	650128	Screw, Fil. Hd.	1
121	30622	Extension, Blower Housing	1
122	32961	Valve, Shut-Off	1
123	29774	Line, Fuel	1
124	29716	Screw, Pan Hd.	4
129	32589	Key, Flywheel	1
130	31843A	Bracket, Governor Gear	1
131	28763	Screw, Hex Washer Hd.	2
135	650760	Screw, Pan Hd.	1
136	33013	Cover, Starter Bubble	1
137	32312	Retainer, Primer Bulb	1
138	32180B	Line, Primer	1
139	32182	Primer Assy. (Incl. Ref. #137, 140 & 141)	1
140	32183	Bulb, Primer	1
141	32184	Body Primer	1
144	650542	Screw, Hex Hd.	4
145	33876	Gasket, Stator	1
146	34240	Wire, Ground	1
147	31546	Bushing, Crankshaft	1
148	34126	Bracket, Grommet Mounting	1
149	28545	Grommet, Plastic	1
150	650643	Screw, Pan Hd. Self-Tap	1
152	34127	Guard, Starter	1
154	32576	Seal, Snow Guard	1
163	32125	Cup, Starter	1
164	590417	Screen, Starter Cup	1
166	610694A	Magneto (The complete magneto is not available as an assembly. The magneto number is shown for reference purposes only. Order component parts individually, as shown in parts list.)	1
167	631920	Carburetor (Incl. Ref. #75)	1
168	590473	Starter Assy., Rewind	1
169	33239	Gasket Set (Incl. Items Marked *)	1

ENGINE, TECUMSEH MODEL NO. H70-130176H
(7 H.P. SNOWTHROWER MODEL NO. 38050)

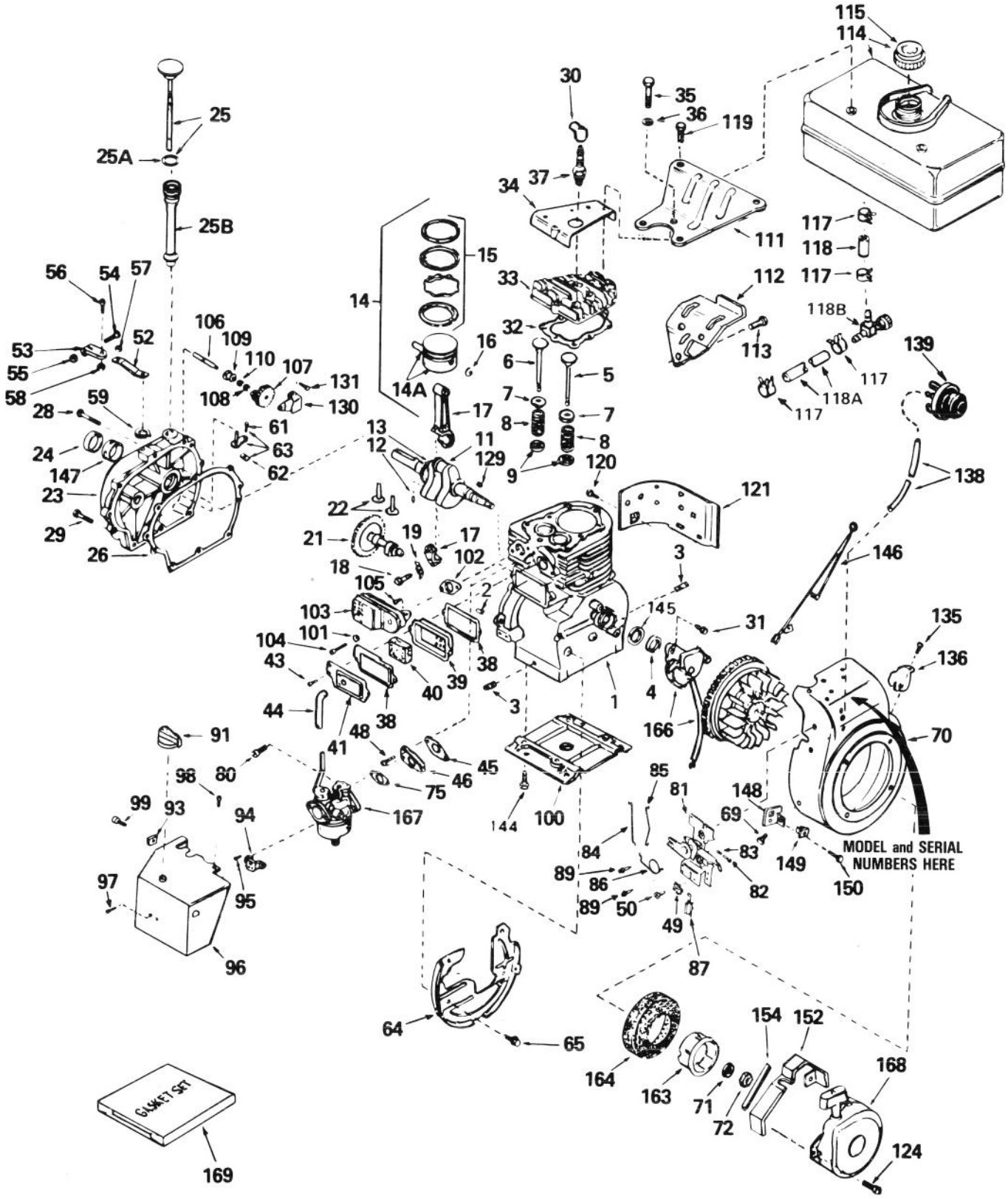

ENGINE, TECUMSEH MODEL NO. H70-130176H
(7 H.P. SNOWTHROWER MODEL NO. 38050)

Ref. No.	Part No.	Description	No. Used
1	32586B	Cylinder Assy. (Incl. Ref. #2, 3 & 4)	1
2	27652	Pin, Dowel	2
3	27642	Plug, Sq. Hd. Pipe	2
4	32630	Seal, Oil	1
5	32783	Valve, Intake (Std.) (Incl. Ref. #9)	1
5	32784	Valve, Intake (1/32" oversize) (Incl. Ref. #9)	1
6	27878A	Valve, Exhaust (Std.) (Incl. Ref. #9)	1
6	27880A	Valve, Exhaust (1/32" oversize) (Incl. Ref. #9)	1
7	27882	Cap, Upper Valve Spring	2
8	27881	Spring, Valve	2
9	32581	Cap, Lower Valve Spring	2
11	34889	Crankshaft Assy. (Incl. Ref. #12 & 13)	1
12	29783	Pin, Crankshaft Gear	1
13	27884	Gear, Crankshaft	1
14	34517	Piston, Pin & Ring Assy., (Std.) (Incl. Ref. #14A, 15 & 16)	1
14	34518	Piston, Pin & Ring Assy. (.010 oversize) (Incl. Ref. #14A, 15 & 16)	1
14	34519	Piston, Pin & Ring Assy., (.020 oversize) (Incl. Ref. #14A, 15 & 16)	1
14A	32592B	Piston & Pin Assy. (Std.) (Incl. Ref. #16)	1
14A	32593B	Piston & Pin Assy. (.010 oversize) (Incl. Ref. #16)	1
14A	32594B	Piston & Pin Assy. (.020 oversize) (Incl. Ref. #16)	1
15	32595	Ring Set, Piston (Std.)	1
15	32596	Ring Set, Piston (.010 oversize)	1
15	32597	Ring Set, Piston (.020 oversize)	1
16	27888	Ring, Piston Pin Retaining	2
17	32591C	Rod Assy., Connecting (Incl. Ref. #18 & 19)	1
18	650662B	Screw, Connecting Rod	2
19	34242	Dipper, Oil	1
21	32115	Camshaft (Mechanical Compression Release)	1
22	34034	Lifter, Valve	2
23	31303B	Cover, Cylinder (Incl. Ref. #24, 106 & 147)	1
24	28427	Seal, Oil	1
25	34011A	Dipstick, Oil (Incl. Ref. #25A)	1
25A	33590	"O" Ring	1
25B	33893A	Tube, Oil Fill	1
26	*30684	Gasket, Cylinder Cover	1
28	650488	Screw, Hex Hd.	7
29	650493	Screw, Hex Hd.	1
30	610118	Cover, Spark Plug	1
31	650489	Screw, Hex Hd.	2
32	*32631	Gasket, Cylinder Head	1
33	30938A	Head, Cylinder (Incl. 3 of No. 35)	1
34	30939A	Cover, Cylinder Head	1
35	650697A	Screw, Hex Flange Hd.	8
36	650691	Washer, Flat	1
37	33636	Plug, Spark (Champion J-8 or equivalent) Except for Canada	1
37	34251 Canada	Resistor Spark Plug (Canadian Regulations require RJ-17LM resistor spark plug)	1
38	*27896	Gasket, Valve Spring Cover	2
39	28423	Body Assy., Breather	1
40	28424	Element, Breather	1
41	28425	Cover, Valve Spring	1
43	650128	Screw, Fil. Hd.	2
44	27627	Tube, Breather	1
45	*27915	Gasket, Intake	1
46	34712	Flange, Carburetor (Incl. Ref. #80)	1
48	30196	Screw, Fil. Hd.	2
49	27793	Clip, Conduit	1
50	28942	Screw, Hex Washer Hd.	1
52	33454	Lever, Governor	1
53	29916	Clamp, Governor Lever	1
54	29826	Screw, Hex Washer Hd.	1
55	29216	Locknut, Hex	1
56	650548	Screw, Hex Washer Hd.	1
57	29918	Washer, Lock	1
58	30322	Locknut, Hex	1
59	29642	Ring, Retaining	1
61	650494	Screw, Fil. Hd.	1
62	30700	Yoke, Governor	1
63	30699C	Rod Assy., Governor (Incl. Ref. #61 & 62)	1
64	29536	Baffle, Blower Housing	1
65	650561	Screw, Hex Washer Hd.	2
69	29747A	Screw, Hex Hd.	2
70	34830	Housing, Blower (Incl. Ref. #135 & 136)	1
71	650815	Washer, Belleville	1
72	8116	Nut, Crankshaft	1
75	*31688	Gasket, Carburetor	1
80	650372	Screw, Hex Hd.	2
81	34664	Control Assy., Speed (Incl. Ref. #82, 83, 86 & 87)	1
82	650549	Screw, Fil. Hd.	1
83	31342	Spring, Compression	1
84	34661	Link, Governor	1
85	34662	Link, Throttle	1

ENGINE, TECUMSEH MODEL NO. H70-130176H (Continued)
(7 H.P. SNOWTHROWER MODEL NO. 38050)

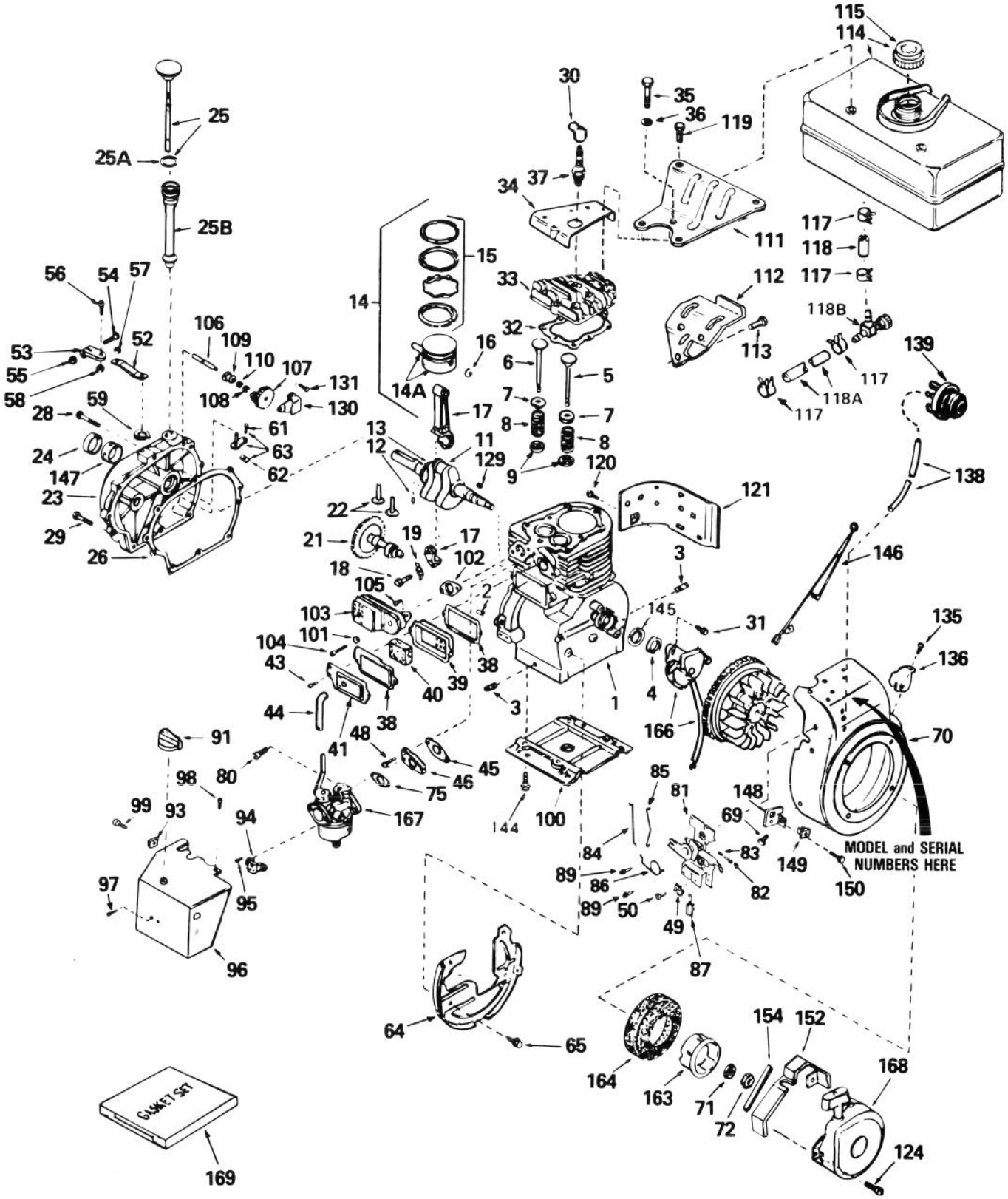

ENGINE, TECUMSEH MODEL NO. H70-130176H (Continued)
(7 H.P. SNOWTHROWER MODEL NO. 38050)

Ref. No.	Part No.	Description	No. Used
86	34663	Spring, Speed Control	1
87	610973	Terminal Assembly	1
89	650821	Screw, Hex Washer Hd. Thread Cutting	2
91	34585	Knob, Control	1
93	650764	Nut, "U" Type	1
94	32398	Bracket, Choke	1
95	28820	Screw, Fil. Hd.	2
96	34672	Cover, Carburetor	1
97	650257	Screw, Pan Hd.	2
98	650765	Screw, Hex Washer Hd. Self-Drilling	1
99	650760	Screw, Pan Hd.	1
100	29538	Base, Engine Mounting	1
101	26073	Washer, Flat	1
102	*27930	Gasket, Muffler	1
103	32401	Muffler	1
104	650694A	Screw, Hex Flange Hd.	1
105	30196	Screw, Fil. Hd.	1
106	31845	Shaft, Mechanical Governor	1
107	30591	Gear Assy., Governor (Incl. Ref. #110)	1
108	29193	Ring, Retaining	1
109	30588A	Spool, Governor	1
110	30590A	Washer, Flat	1
111	34159	Plate, Fuel Tank Mtg.	1
112	34158	Bracket, Fuel Tank Mtg.	1
113	650561	Screw, Hex Washer Hd.	1
114	34186	Tank Assy., Fuel (Incl. Ref. #115)	1
115	34210	Cap, Fuel	1
117	26460	Clamp, Fuel Line	4
118	30962	Line, Fuel	1
118A	29774	Line, Fuel	1
118B	32961	Valve, Shut-off	1
119	650665	Screw, Hex Washer Hd.	2

Ref. No.	Part No.	Description	No. Used
120	650128	Screw, Fil. Hd.	1
121	30622	Extension, Blower Housing	1
124	29716	Screw, Pan Hd.	4
129	32589	Key, Flywheel	1
130	31843A	Bracket, Governor Gear	1
131	650836	Screw, Hex Washer Hd. Thread Forming	2
135	650760	Screw, Pan Hd.	1
136	33013	Cover, Starter Bubble	1
138	32180B	Line, Primer	1
139	34814	Primer Assy.	1
144	650542	Screw, Hex Hd.	4
145	33876	Gasket, Stator	1
146	34240	Wire, Ground	1
147	31546	Bushing, Crankshaft	1
148	34126	Bracket, Grommet Mounting	1
149	28545	Grommet, Plastic	1
150	650643	Screw, Pan Hd. Self-Tap	1
152	34127	Guard, Starter	1
154	32576	Seal, Snow Guard	1
163	32125	Cup, Starter	1
164	590417	Screen, Starter Cup	1
166	611043	Magneto (The complete magneto is not available as an assembly. The magneto number is shown for reference purposes only. Order component parts individually, as shown in parts list.)	1
167	631920	Carburetor (Incl. Ref. #75)	1
168	590473	Starter Assy., Rewind	1
169	33239	Gasket Set (Includes items marked *)	1

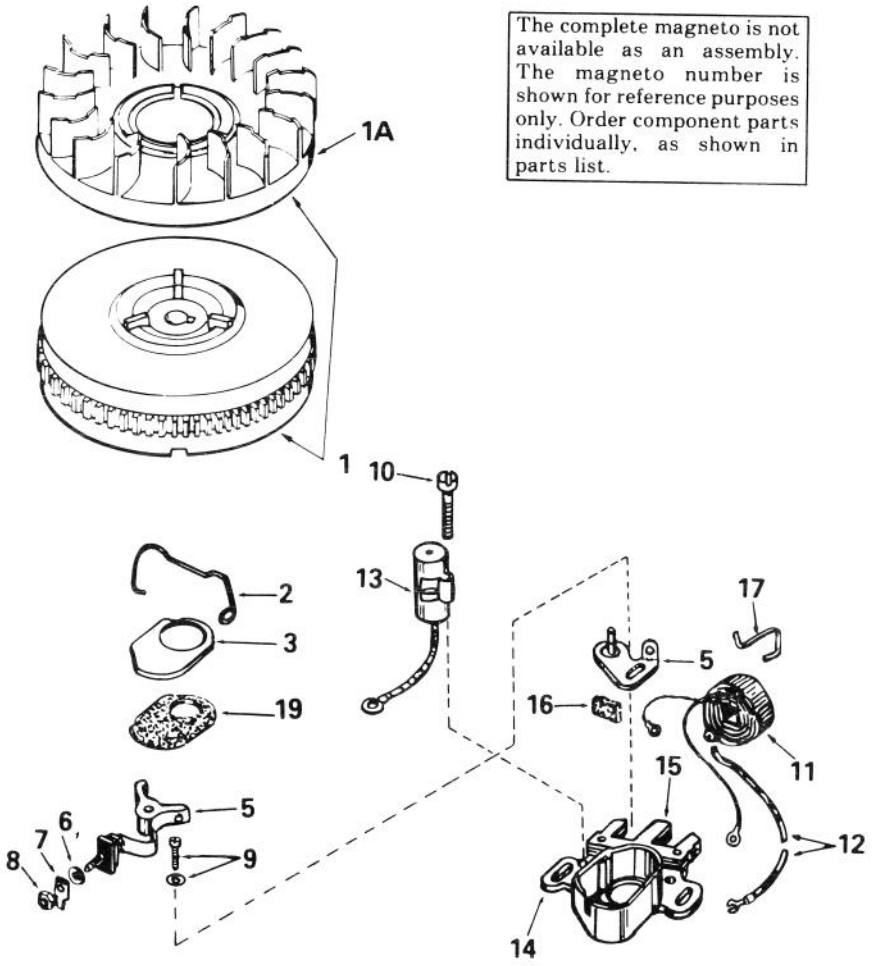

The complete magneto is not available as an assembly. The magneto number is shown for reference purposes only. Order component parts individually, as shown in parts list.

MAGNETO NO. 611043
(7 H.P. SNOWTHROWER MODEL NO. 38050)

Ref. No.	Part No.	Description	No. Used
1	611042	Flywheel (Incl. Ref. #1A)	1
1A	610933	Fan, Blower	1
2	30551	Spring, Breaker Box Dust Cover	1
3	610947	Cover, Dust	1
5	30547A	Contact Assy., Breaker	1
6	610385	Washer, Terminal	1
7	33356	Tab, Ground Terminal	1
8	610408	Nut, Terminal	1
9	29181	Screw & Washer, Breaker	1
10	610593	Screw, Condenser	1

Ref. No.	Part No.	Description	No. Used
11	30560A	Coil Assy., (Incl. Ref. #12)	1
12	30554	Wire, Lead	1
13	30548B	Condenser	1
14	30545	Core & Plate	1
15	30561B	Stator Assy. (Incl. Ref. #2 thru 11, 13, 14, 16, 17 & 19)	1
16	30549	Felt, Cam Wiper	1
17	31311	Clip, Coil Locking	1
19	610957	Gasket, Dust Cover	1

*The complete magneto is not available as an assembly. The magneto number is shown for reference purposes only. Order component parts individually, as shown in parts list.

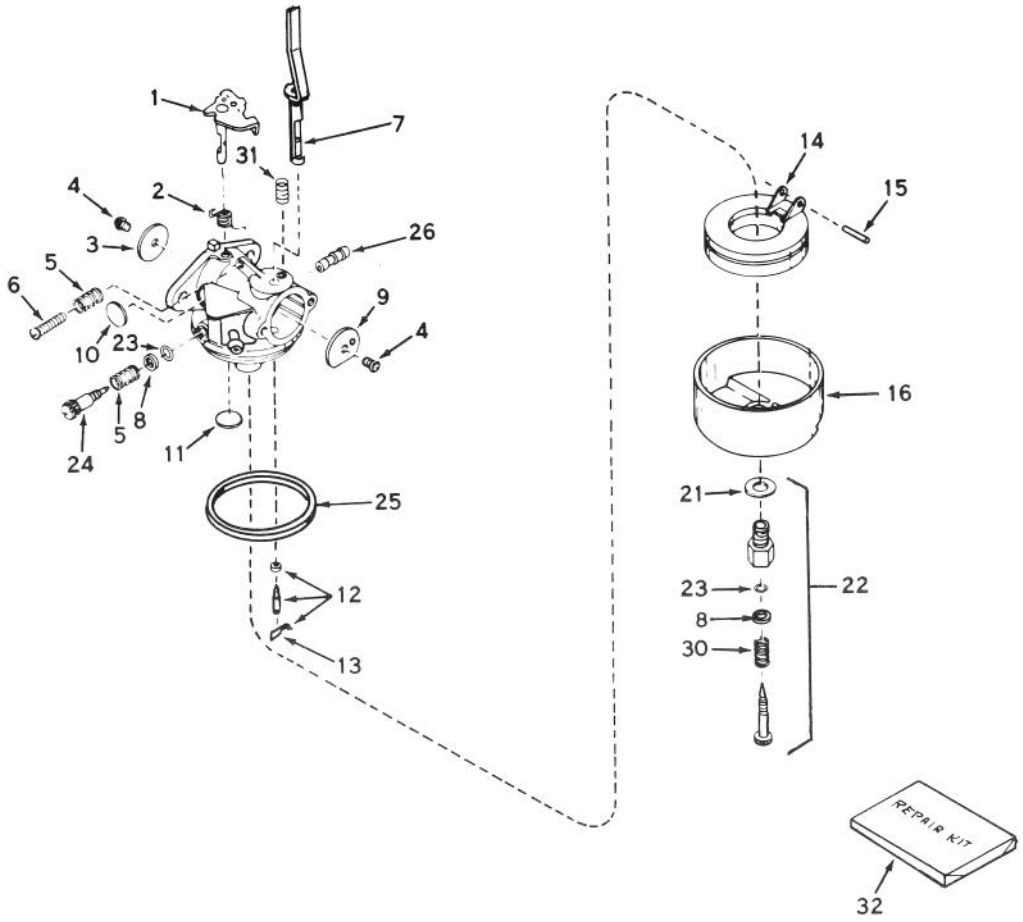

CARBURETOR NO. 631920

(7 H.P. SNOWTHROWER MODEL NO. 38050)

Ref. No.	Part No.	Description	No. Used
1	31834	Shaft & Lever Assy., Throttle	1
2	632016	Spring, Throttle Return	1
3	631036	Shutter, Throttle	1
4	650506	Screw	2
5	630766	Spring, Idle Regulating Screw	2
6	650417	Screw, Idle Regulating	1
7	631913	Shaft & Lever Assy., Choke	1
8	630739	Washer, Flat	1
9	631815	Shutter, Choke	1
10	*630748	Plug, Welch	1
11	*631027	Plug, Welch	1
12	*631021	Inlet Needle, Seat & Clip Assy. (Incl. Ref. #13)	1
13	631022	Clip, Inlet Needle	1

Ref. No.	Part No.	Description	No. Used
14	632019	Float, Carburetor	1
15	*631024	Shaft, Float	1
16	631867	Bowl, Float	1
21	27110	Gasket, Bowl-to-Body	1
22	*31839	Adjustment Screw Assy., Main (Incl. Ref. #8, 21, 23 & 30)	1
23	*630740	"O" Ring, Adjustment Screw	2
24	*631078	Screw, Idle Adjustment	1
25	*631028	Gasket, Bowl-to-Body	1
26	631803	Fitting, Fuel Inlet	1
30	630738	Spring, Main Adjustment Screw	1
31	630735	Spring, Choke Stop	1
32	31840	Repair Kit (Incl. Items Marked *)	1

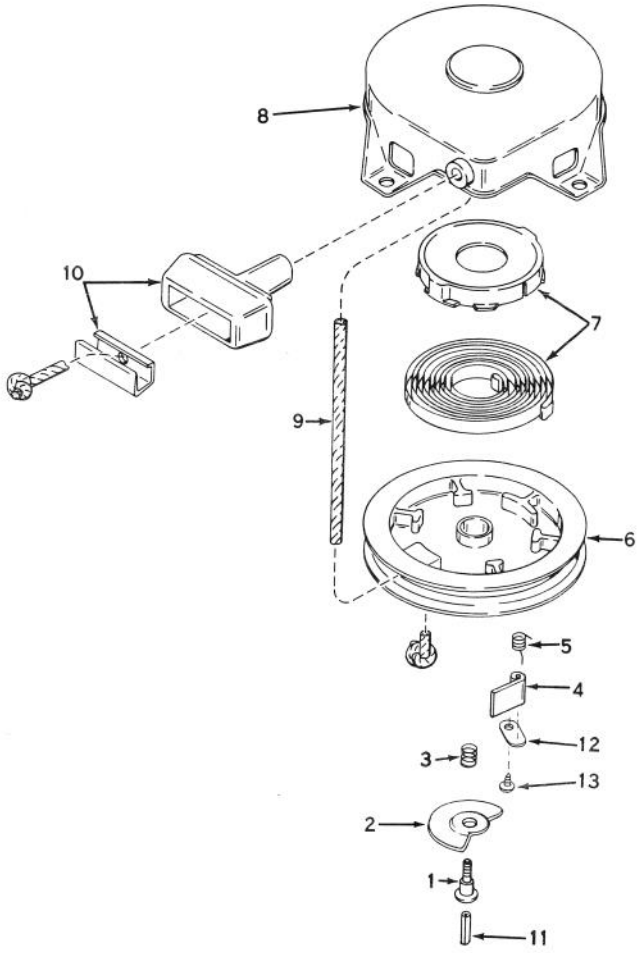

REWIND STARTER NO. 590473

(5 AND 7 H.P. SNOWTHROWER MODEL NOS. 38040 AND 38050)

Ref. No.	Part No.	Description	No. Used
1	590409A	Screw	1
2	590474	Cam, Dog	1
3	590411	Spring, Brake	1
4	590148	Dog, Starter	1
5	590475	Spring, Dog	1
6	590478	Pulley	1
7	590414	Spring & Keeper Assembly	1

Ref. No.	Part No.	Description	No. Used
8	590415	Housing Assembly, Starter (Incl. Ref. #1)	1
9	590451A	Rope, Starter	1
10	590387	Handle Assy., Starter	1
11	590459	Pin, Centering	1
12	590476	Retaining, Dog	1
13	590477	Screw	1

IDENTIFICATION AND ORDERING

MODEL AND SERIAL NUMBERS

The Snowthrower has two identification numbers: a model number and a serial number. The two numbers are stamped on a decal which is located on back of engine mounting plate. In any correspondence concerning the Snowthrower, supply model and serial numbers to assure that correct information and replacement parts are obtained.

To order replacement parts from an Authorized TORO Service Dealer, supply the following information:

1. Model and serial numbers of the Snowthrower.
2. Part number, description, and quantity of part(s) desired.

Note: Do not order by reference number if a parts catalog is being used; use the PART NUMBER.

The Toro Promise

A ONE YEAR LIMITED WARRANTY

The Toro Company promises to repair any TORO Product if defective in materials or workmanship. The following time periods from the date of purchase apply:

Residential Product . . . . . 1 Year
Residential Products Used Commercially . . . 45 Days

The costs of parts and labor are included, but the customer pays the transportation costs. Just return any residential product to an Authorized TORO Service Dealer or TORO Distributor.

Should you feel your TORO Product is defective and wish to rely on The Toro Promise, the following procedure is recommended:

1. Contact any Authorized TORO Service Dealer, TORO Master Service Dealer, or TORO Distributor (the Yellow Pages of your telephone directory is a good reference source).
2. He will either instruct you to return the product to him or recommend another Authorized TORO Service outlet which might be more convenient.
3. Bring the product along with your original sales slip, or other evidence of purchase date, to the service dealer.
4. The servicing dealer will inspect the unit, advise you whether the product is defective and, if so, make all repairs necessary to correct the defect without extra charge to you.

If for any reason you are dissatisfied with the dealer's analysis of the defect or the service performed, you may contact us.

Write:

TORO Consumer Service Department
8111 Lyndale Avenue South
Minneapolis, Minnesota 55420

The above remedy of product defects through repair by an Authorized TORO Service Dealer is the purchaser's sole remedy for any defect.

THERE IS NO OTHER EXPRESS WARRANTY. ALL IMPLIED WARRANTIES OF MERCHANTABILITY AND FITNESS FOR USE ARE LIMITED TO THE DURATION OF THE EXPRESS WARRANTY.

Some states do not allow limitations on how long an implied warranty lasts, so the above limitation may not apply to you.

This warranty applies only to parts or components which are defective and does not cover repairs necessary due to normal wear, misuse, accidents, or lack of proper maintenance. Regular, routine maintenance of the unit to keep it in proper operating condition is the responsibility of the owner.

All warranty repairs reimbursable under The Toro Promise must be performed by an Authorized TORO Service Dealer using Toro approved replacement parts.

Repairs or attemped repairs by anyone other than an Authorized TORO Service Account are not reimbursable under The Toro Promise. In addition, these unauthorized repair attempts may result in additional malfunctions, the correction of which is not covered by warranty.

THE TORO COMPANY IS NOT LIABLE FOR INDIRECT, INCIDENTAL OR CONSEQUENTIAL DAMAGES IN CONNECTION WITH THE USE OF THE PRODUCT INCLUDING ANY COST OR EXPENSE OF PROVIDING SUBSTITUTE EQUIPMENT OR SERVICE DURING PERIODS OF MALFUNCTION OR NON-USE.

Some states do not allow the exclusion or limitation of incidental or consequential damages, so the above limitation or exclusion may not apply to you.

This warranty gives you specific legal rights, and you may also have other rights which vary from state to state.

COUNTRIES OTHER THAN THE UNITED STATES OR CANADA

Customers who have purchased TORO products exported from the United States or Canada should contact their TORO Distributor (Dealer) to obtain guarantee policies for your country, province or state. If for any reason you are dissatisfied with your Distributor's service or have difficulty obtaining guarantee information, contact the TORO importer. If all other remedies fail, you may contact us at The Toro Company.

International Group
Service Department
One Corporate Center
7401 Metro Boulevard
Minneapolis, Minnesota 55435 U.S.A.

Compliance with Radio Interference Regulations Certified.
Certifie Conforme au Reglement sur le Brouillage Radioelectrique.

MAINTENANCE RECORD

Date	Hours Used	Oil Change	Lubrication	Summer Storage	Fall Service	Spark Plug Gap

MAINTENANCE RECORD

Date	Hours Used	Oil Change	Lubrication	Summer Storage	Fall Service	Spark Plug Gap

MAINTENANCE RECORD

Date	Hours Used	Oil Change	Lubrication	Summer Storage	Fall Service	Spark Plug Gap