Form No. 3435-600 Rev F

TORO®

Count on it.

Parts Catalog

GrandStand® Multi Force® Mower

With 52in TURBO FORCE® Cutting Unit

Model No. 72529—Serial No. 400000000 and Up

Register at www.Toro.com.
Original Instructions (EN)

3435-600 F

Ordering Replacement Parts

To order replacement parts, please supply the part number, the quantity, and the description of each part desired.

Understanding Reference Numbers

Each identified part in an illustration has a reference number. The reference number for a part also appears in the parts list, along with other information about the part.

This catalog uses two special reference number formats, one to indicate parts in a service assembly and another to indicate the quantity of a given part in an illustration.

Service Assembly Reference Numbers

Parts in service assemblies have reference numbers in the form a:b. The a represents the reference number of the entire service assembly and the b represents a sequential number unique to each part within the service assembly.

For example, a wheel assembly might be identified by reference number 6, the tire by 6:1, the valve by 6:2, and the wheel by 6:3. When you order the assembly identified by reference number 6, you receive all parts identified by reference numbers 6:1,6:2, and 6:3. However, you may also order any part individually. Reference numbers of this type appear in illustration and in parts lists.

Reference Numbers Indicating Quantity

In an illustration, if a reference number indicates more than one part, the reference number has the form nX y. The n represents the quantity of the part, the X is the multiplication symbol, and the y represents the reference number.

For example, in an illustration, the reference number 2X 37 means that two of the parts identified by reference number 37 are indicated.

Contents

52 Inch Deck Assembly 4
Deck and Decal Assembly No. 139-8097 6
Spindle Assembly No. 137-9780 8
Deflector Assembly No. 120-2451 10
Ground Drive Assembly 12
LH Transmission Assembly No. 138-5840 14
RH Transmission Assembly No. 138-5839 16
Hydraulic Hose Assembly No. 139-4059 18
Motion Control Assembly 20
Control Handle Assembly No. 132-5157 22
Control Handle Assembly No. 132-5158 24
Parking Brake Assembly 26
Deck Lift Assembly 28
HOC Lever Assembly No. 130-1755 30
Frame Assembly 32
Wheel and Bearing Assembly 34
Platform Assembly 36
Engine Assembly 38
Fuel Tank Assembly 40
Wire Harness Assembly 42
Attachments and Accessories 44

© 2025—The Toro® Company
8111 Lyndale Avenue South
Bloomington, MN 55420

Contact us at www.Toro.com.
Printed in the USA.
All Rights Reserved

52 Inch Deck Assembly

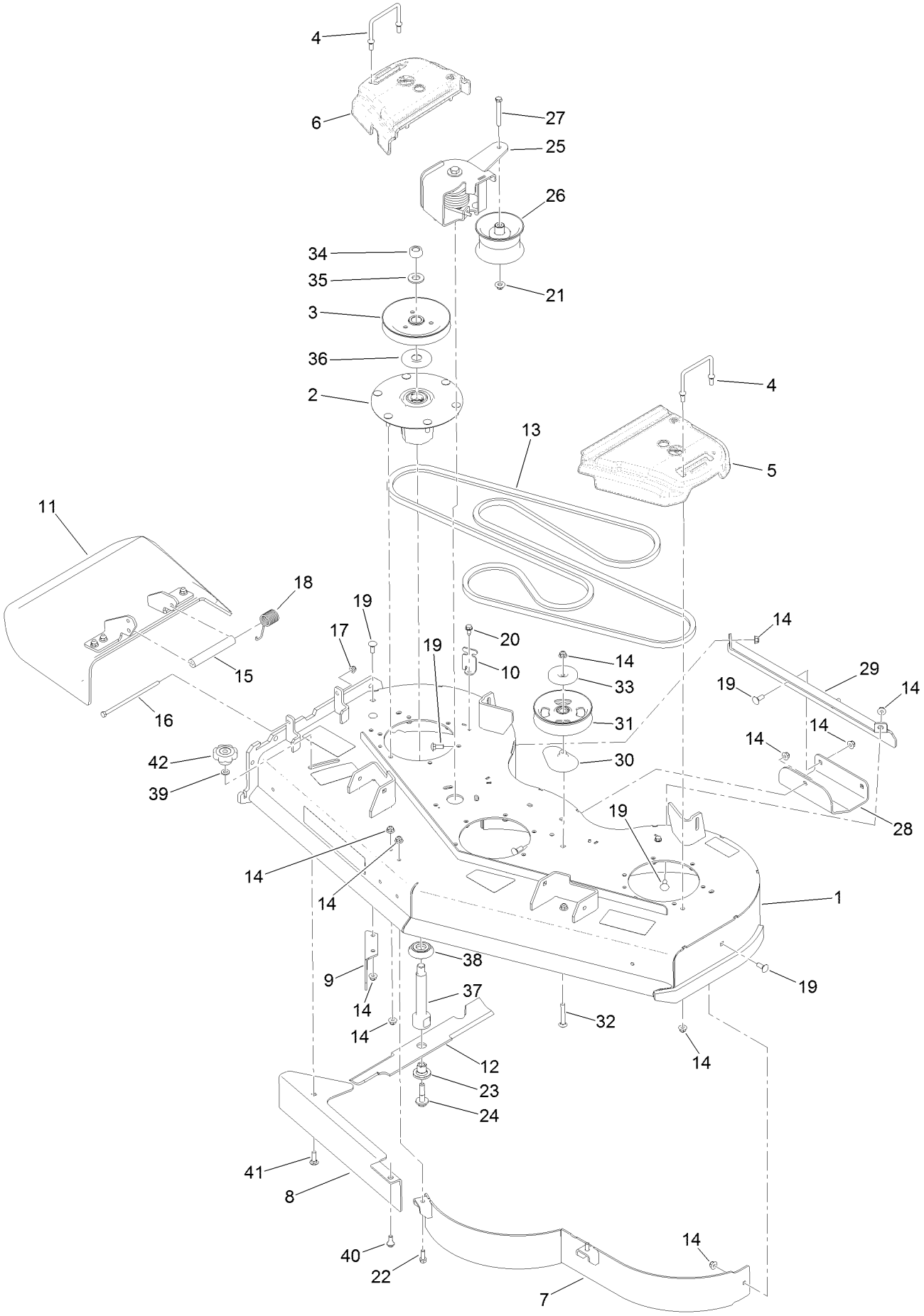

52 Inch Deck Assembly (continued)

Ref.	Part Number	Qty.	Description
1	139-8097	1	52 Deck ASM
2	137-9780	3	Spindle ASM
3	138-6061	3	Sheave-Blade, Drive
4	109-6982	3	Wireform-Cover
5	109-6936	1	Cover-Belt, LH
6	109-6935	1	Cover-Belt, RH
7	114-1979-01	1	Baffle-52 Inch
8	139-8105-01	1	Plate-Baffle, Formed [red]
9	130-6594-01	1	Baffle-Discharge
10	117-5758-03	4	Bracket-Cover
11	120-2451	1	Deflector ASM
12	140-1242	3	Blade-Flow, High
13	131-1122	1	Belt-V
14	104-8301	39	Nut-HF, NI
15	105-4622	1	Spacer
16	322-50	1	Screw-HH
17	104-8300	1	Nut-HF, NI
18	108-4052	1	Spring-Torsion
19	3231-2	8	Bolt-CARR
20	32144-70	4	Screw-HWHTF
21	109-6658	1	Nut-Flange, NI
22	92-1624	2	Screw-HWH Thd Form
23	137-9787	3	Bushing-Hex
24	109-9220	3	Screw-Sems
25	136-7395	1	Idler Torsion ASM
26	127-1971	1	Pulley-Idler
27	323-14	1	Screw-HH
28	114-1908-01	1	Skid
29	130-6648-01	1	Bracket-Skid
30	109-2872	1	Spacer-Pulley
31	136-5405	1	Pulley-Idler, Flat
32	3231-44	1	Screw-CARR
33	132-5154	1	Shield-Dust
34	116-7306	3	Nut-Hex
35	103-2802	3	Washer
36	103-1330	3	Guard-Bearing, Top
37	138-6045	3	Shaft-Spindle
38	137-9784	3	Guard-Bottom
39	100-4852	1	Washer-Hardened
40	94-7582	1	Bolt-Shoulder
41	3231-25	1	Bolt-CARR
42	109-1092	1	Knob

Deck and Decal Assembly No. 139-8097

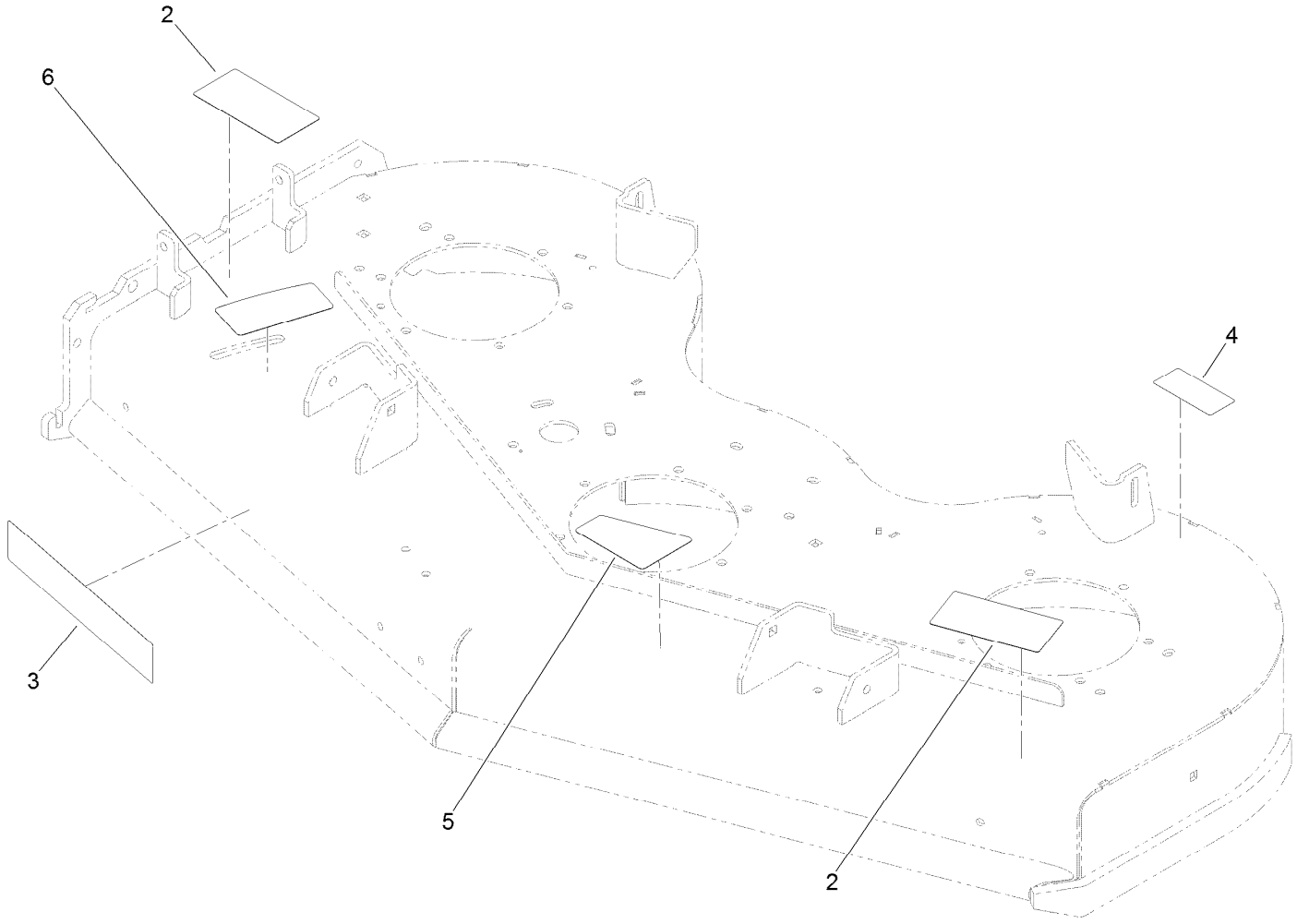

Deck and Decal Assembly No. 139-8097 (continued)

Ref.	Part Number	Qty.	Description
2	133-4604	2	Decal-Danger
3	107-1618	1	Decal
4	116-8283	1	Decal-Torque, Bolt
5	131-3507	1	Decal-Belt, Tension (CE)
6	131-1180	1	Decal-Adjustment, Baffle

Spindle Assembly No. 137-9780

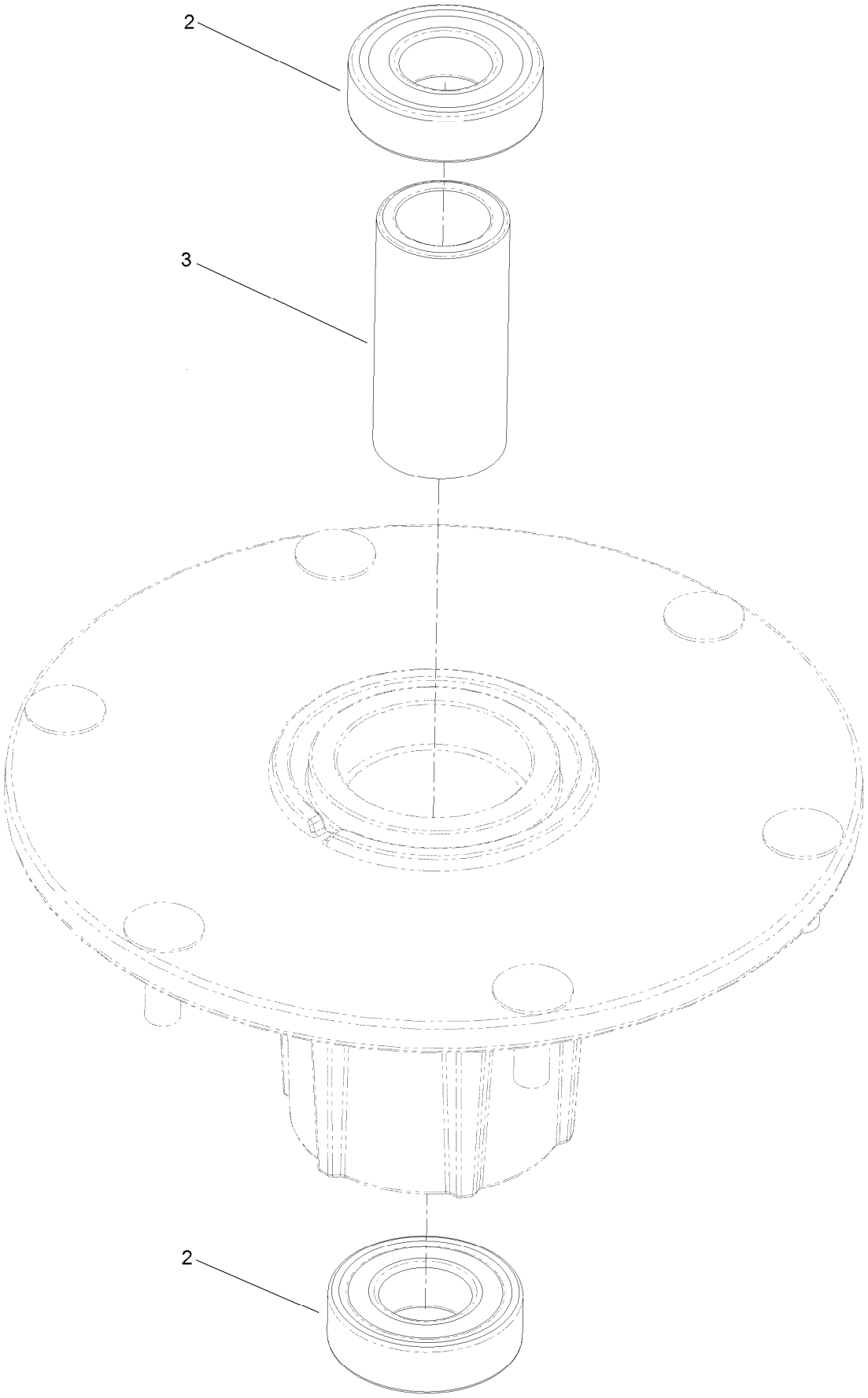

Spindle Assembly No. 137-9780 (continued)

Ref.	*Part Number*	*Qty.*	*Description*
2	116-0720	2	Bearing-Ball
3	138-6042	1	Spacer-Bearing

Deflector Assembly No. 120-2451

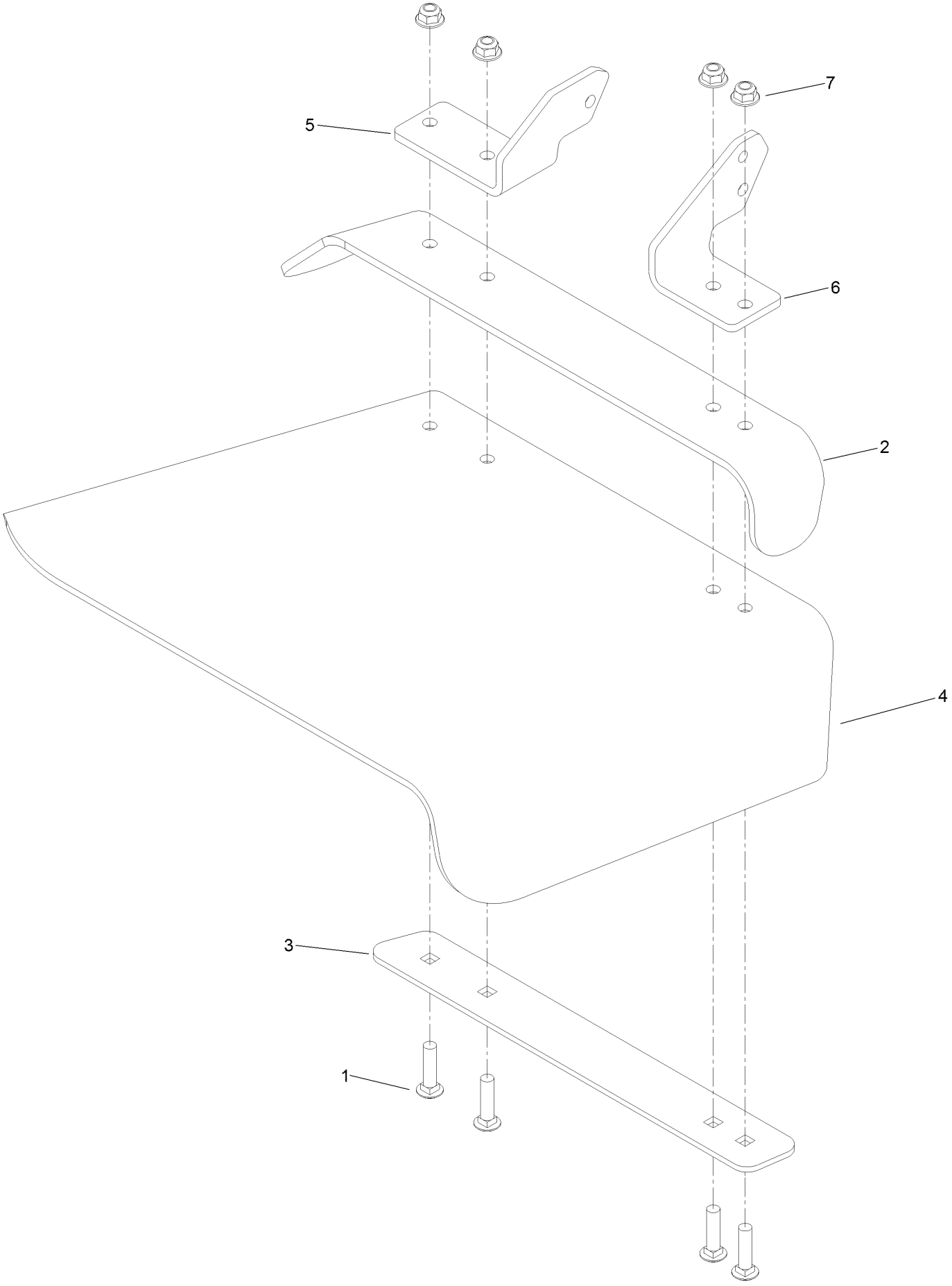

Deflector Assembly No. 120-2451 (continued)

Ref.	Part Number	Qty.	Description
1	3231-4	4	Screw-CARR
2	106-3246-01	1	Deflector
3	106-3248-03	1	Strap-Discharge
4	110-0759	1	Deflector-Rubber
5	108-4059-01	1	Plate-Hinge, Rear
6	106-3253-01	1	Plate-Hinge, Front
7	104-8301	4	Nut-HF, NI

Ground Drive Assembly

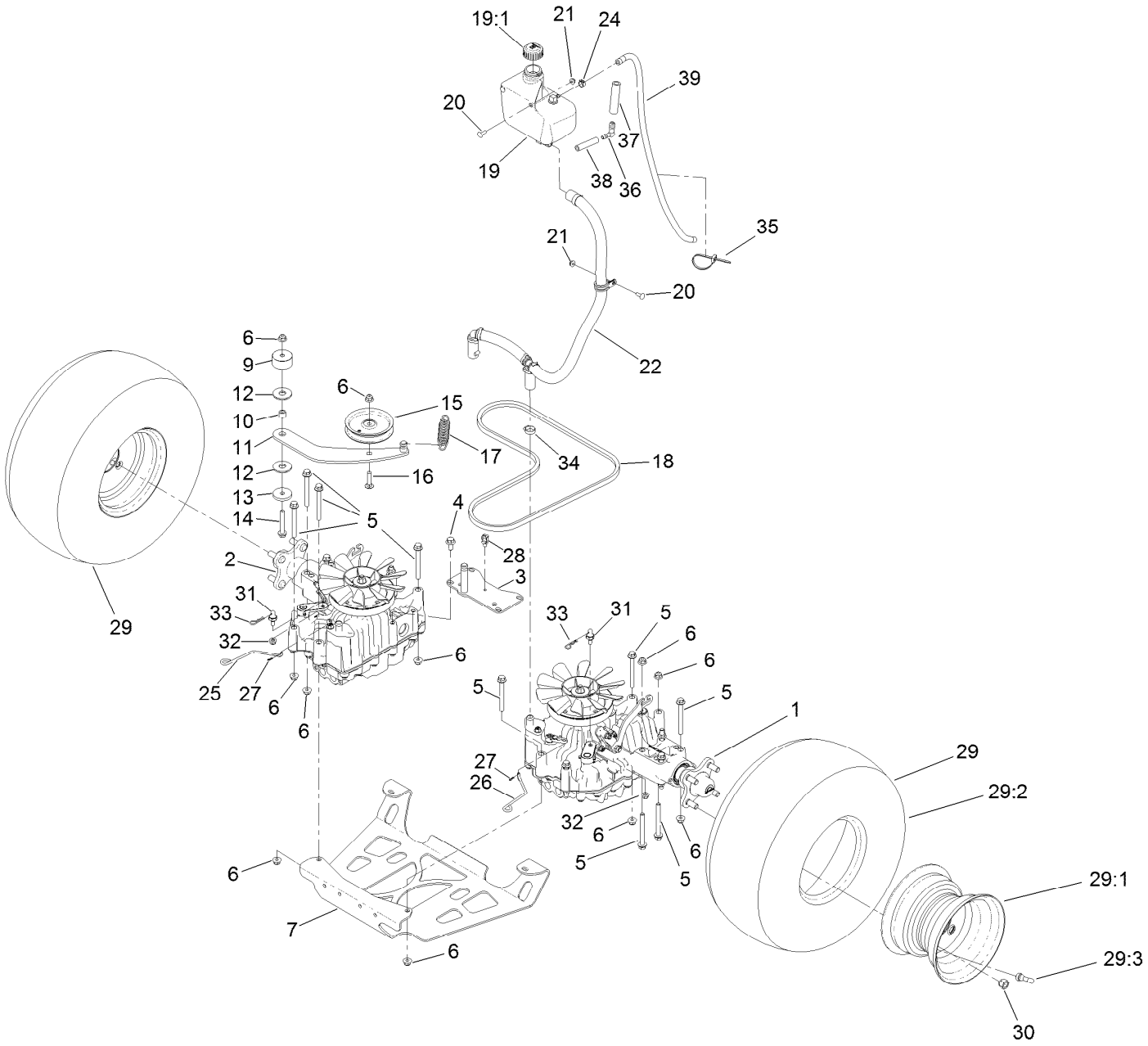

Ground Drive Assembly (continued)

Ref.	Part Number	Qty.	Description
1	138-5840	1	LH Accy Transmission
2	138-5839	1	RH Transmission ASM
3	131-1131-03	1	Support-Transaxle
4	93-2569	4	Screw-HHF
5	116-4701	16	Screw-HHF
6	104-8301	18	Nut-HF, NI
7	138-1108-03	1	Plate-Skid
9	117-5351	1	Spacer
10	1-413088	1	Bushing-Lever, Lift
11	131-1175	1	Arm-Idler
12	114-0463	2	Washer-Friction, Composite
13	110-9981	1	Washer-Plain
14	3234-39	1	Screw-HHF
15	93-1622	1	Pulley-Idler
16	3231-4	1	Screw-CARR
17	138-1104	1	Spring-Extension
18	131-1124	1	Belt-V
19	132-1135	1	Tank-HYD
19:1	133-8677	1	Cap-Vented
20	3229-25	3	Screw-CARR
21	104-7201	3	Nut-HF, NI
22	139-4059	1	HYD Hose ASM
24	92-2379	1	Clamp-Hose
25	131-7469	1	Rod-Bypass, RH
26	131-7470	1	Rod-Bypass, LH
27	108-2992	2	Pin-Hair
28	32180-030	1	Clip-Tie
29	140-1888	2	Wheel And Tire ASM
29:1	140-1889	1	Rim-8 Inch Black
29:2	120-6466	1	Tire
29:3	232-27	1	Stem-Valve
30	242-50	8	Nut-Lug
31	132-7584	2	Spacer-Hex
32	104-8300	2	Nut-HF, NI
33	3290-250	2	Pin-Cotter
34	2412-141	2	Clamp-Drive, Worm
35	3290-378	1	Tie-Cable
36	136-1290	2	Fitting-Elbow 90
37	83-2080	1	Hose-Valve, Tank
38	133-0223	1	Hose-Fuel
39	110-3257	1	Hose-Fuel

LH Transmission Assembly No. 138-5840

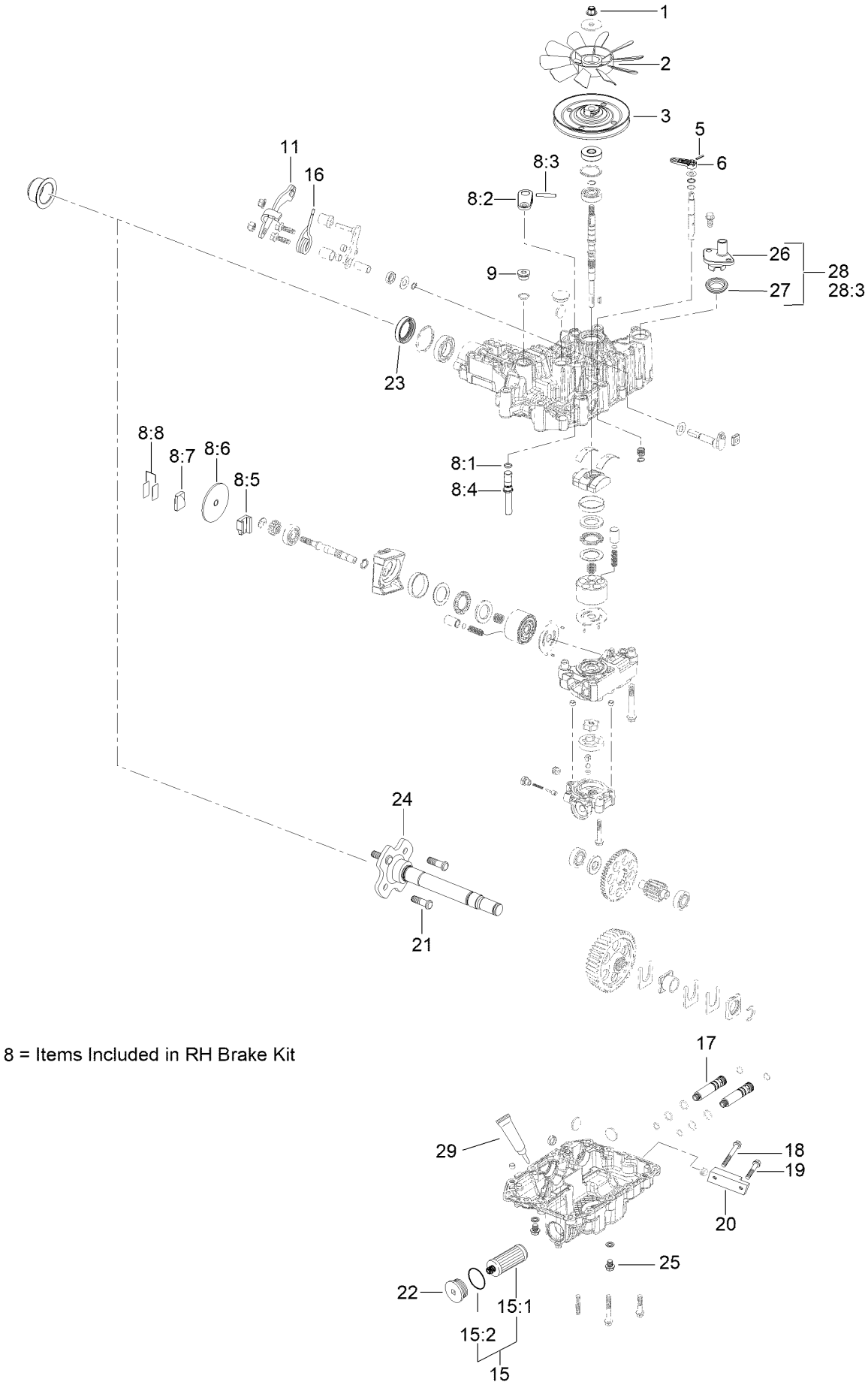

8 = Items Included in RH Brake Kit

LH Transmission Assembly No. 138-5840 (continued)

Ref.	Part Number	Qty.	Description
1	132-4737	1	Nut-Lock
2	132-4738	1	Fan
3	132-4739	1	Pulley
5	104-3265	1	Pin
6	132-4700	1	Lever-Bypass
8	133-1468	1	Brake Kit,Left
8:1		1	O-Ring ●
8:2		1	Arm-Brake ●
8:3		1	Pin-Roll ●
8:4		1	Shaft-Brake ●
8:5		1	Actuator-Brake ●
8:6		1	Disc-Brake ●
8:7		1	Shoe-Brake ●
8:8		1	Shim Kit ●
9	132-4735	1	Cap-Oil
11	136-5401	1	Lever-Control, RH
15	132-4743	1	Hydro Filter Kit
15:1	136-5409	2	Filter
15:2	136-5410	2	O-Ring
16	137-4109	1	Spring-Torsion
17	137-4107	2	Connector
18	125-7222	1	Bolt
19	33104-045	1	Screw-HHF
20	136-5408	1	Manifold
20	93-0474	1	Plug
21	137-9509	4	Stud-Wheel
22	138-4613	1	Cap-Oil Filter
23	139-5587	1	Seal-Axle, Ua
24	139-5588	1	Axle
25	139-5589	2	Drain Bolt
26	139-5590	1	Expansion Fitting
27	139-5591	1	Grommet Seal, Expansion Fitting
28	139-7871	1	Expansion Fitting - W/ Seal
28:3		1	M8*20 Flange Bolt ●
29	138-4628	1	Seal Kit

● Not serviced separately

RH Transmission Assembly No. 138-5839

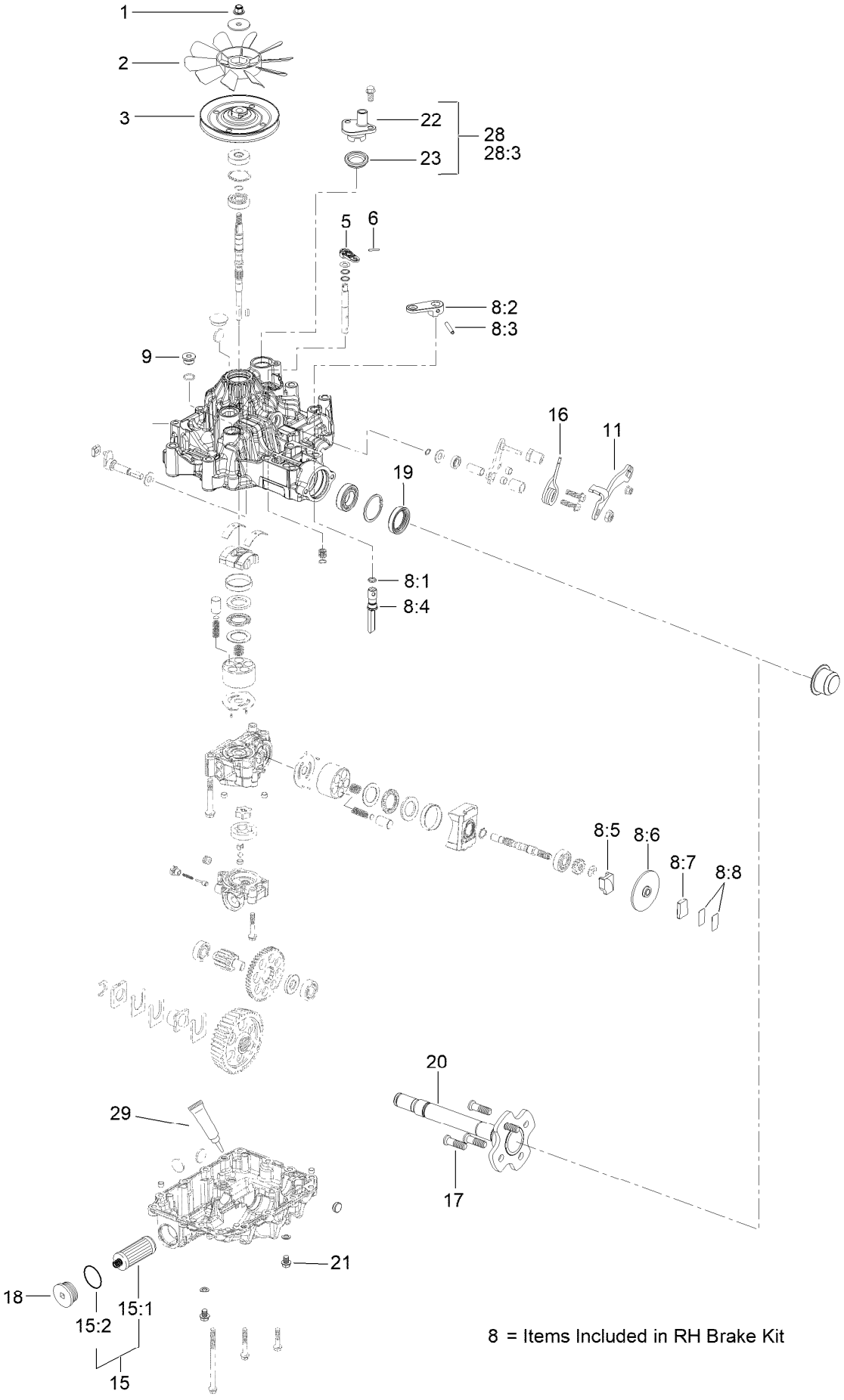

8 = Items Included in RH Brake Kit

RH Transmission Assembly No. 138-5839 (continued)

Ref.	Part Number	Qty.	Description
1	132-4737	1	Nut-Lock
2	132-4738	1	Fan
3	132-4739	1	Pulley
5	104-3265	1	Pin
6	132-4700	1	Lever-Bypass
8	133-1462	1	RH Brake Kit
8:1		1	O-Ring ●
8:2		1	Arm-Brake ●
8:3		1	Pin-Roll ●
8:4		1	Shaft-Brake ●
8:5		1	Actuator-Brake ●
8:6		1	Disc-Brake ●
8:7		1	Shoe-Brake ●
8:8		1	Shim Kit ●
9	132-4735	1	Cap-Oil
11	136-5401	1	Lever-Control, RH
15	132-4743	1	Hydro Filter Kit
15:1	136-5409	2	Filter
15:2	136-5410	2	O-Ring
16	137-4109	1	Spring-Torsion
17	137-9509	4	Stud-Wheel
18	138-4613	1	Cap-Oil Filter
19	139-5587	1	Seal-Axle, Ua
20	139-5588	1	Axle
21	139-5589	2	Drain Bolt
22	139-5590	1	Expansion Fitting
23	139-5591	1	Grommet Seal, Expansion Fitting
28	139-7871	1	Expansion Fitting - W/ Seal
28:3		1	M8*20 Flange Bolt ●
29	138-4628	1	Seal Kit

● Not serviced separately

Hydraulic Hose Assembly No. 139-4059

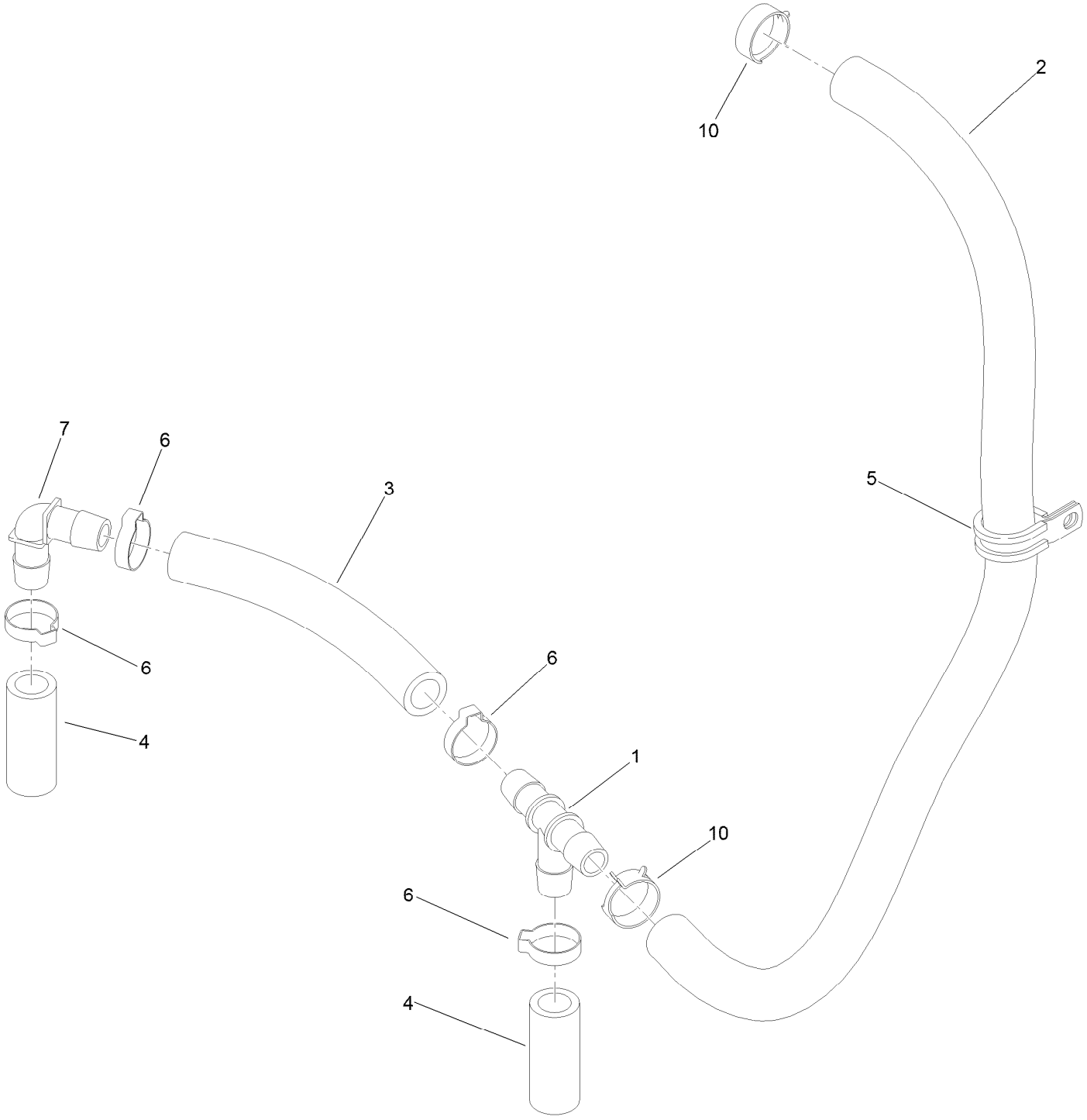

Hydraulic Hose Assembly No. 139-4059 (continued)

Ref.	Part Number	Qty.	Description
1	139-4055	1	Fitting Tee
2	132-5124	1	Hydraulic Hose
3	132-5125	1	Hydraulic Hose
4	132-5126	2	Hydraulic Hose
5	132-7590	1	R-Clamp
6	139-4057	4	Hose Clamp, Oetiker
7	139-4056	1	Fitting 90 DEG
10	132-5133	2	Clamp-Spring

Motion Control Assembly

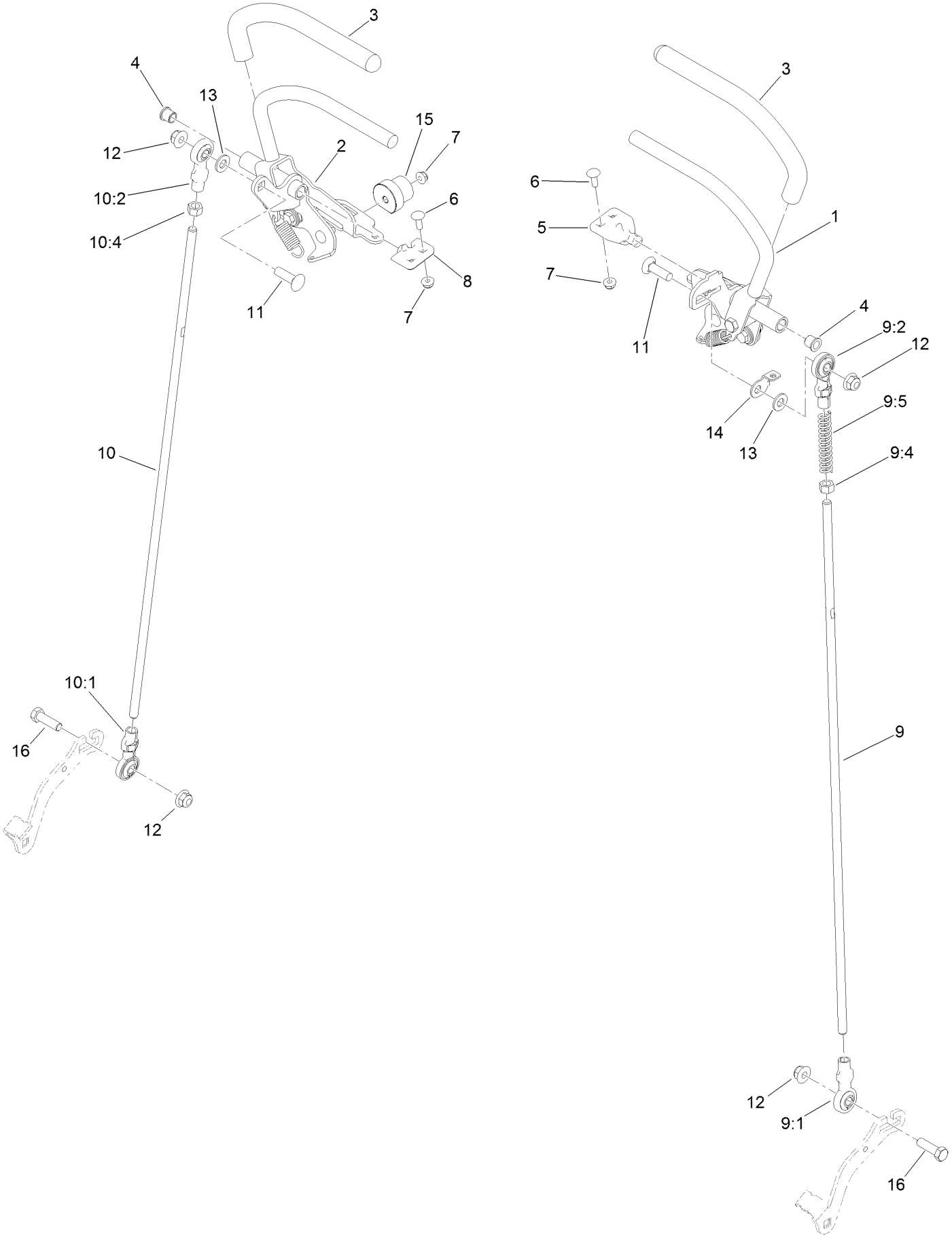

Motion Control Assembly (continued)

Ref.	Part Number	Qty.	Description
1	132-5157	1	LH Control Handle ASM
2	132-5158	1	RH Control Handle ASM
3	119-0222	2	Grip
4	103-9928	2	Bearing
5	120-3288	1	Tab-Pivot, LH
6	3229-1	4	Screw-CARR
7	104-7201	6	Nut-HF, NI
8	120-3287	1	Tab-Pivot, RH
9	138-4619	1	LH Control Rod ASM
9:1	138-4647	1	Ball Joint-LH
9:2	138-4648	1	Ball Joint-RH
9:4	3219-3	1	Nut-Hex
9:5	1-603807	1	Spring-Return, Neutral
10	138-4620	1	RH Control Rod ASM
10:1	138-4647	1	Ball Joint-LH
10:2	138-4648	1	Ball Joint-RH
10:4	3219-3	1	Nut-Hex
11	3231-28	2	Screw-CARR
12	104-8301	4	Nut-HF, NI
13	3256-24	2	Washer-Plain
14	132-7538	1	Bracket-Adjustment, Speed
15	126-1499	2	Cam
16	323-7	2	Screw-HH

Control Handle Assembly No. 132-5157

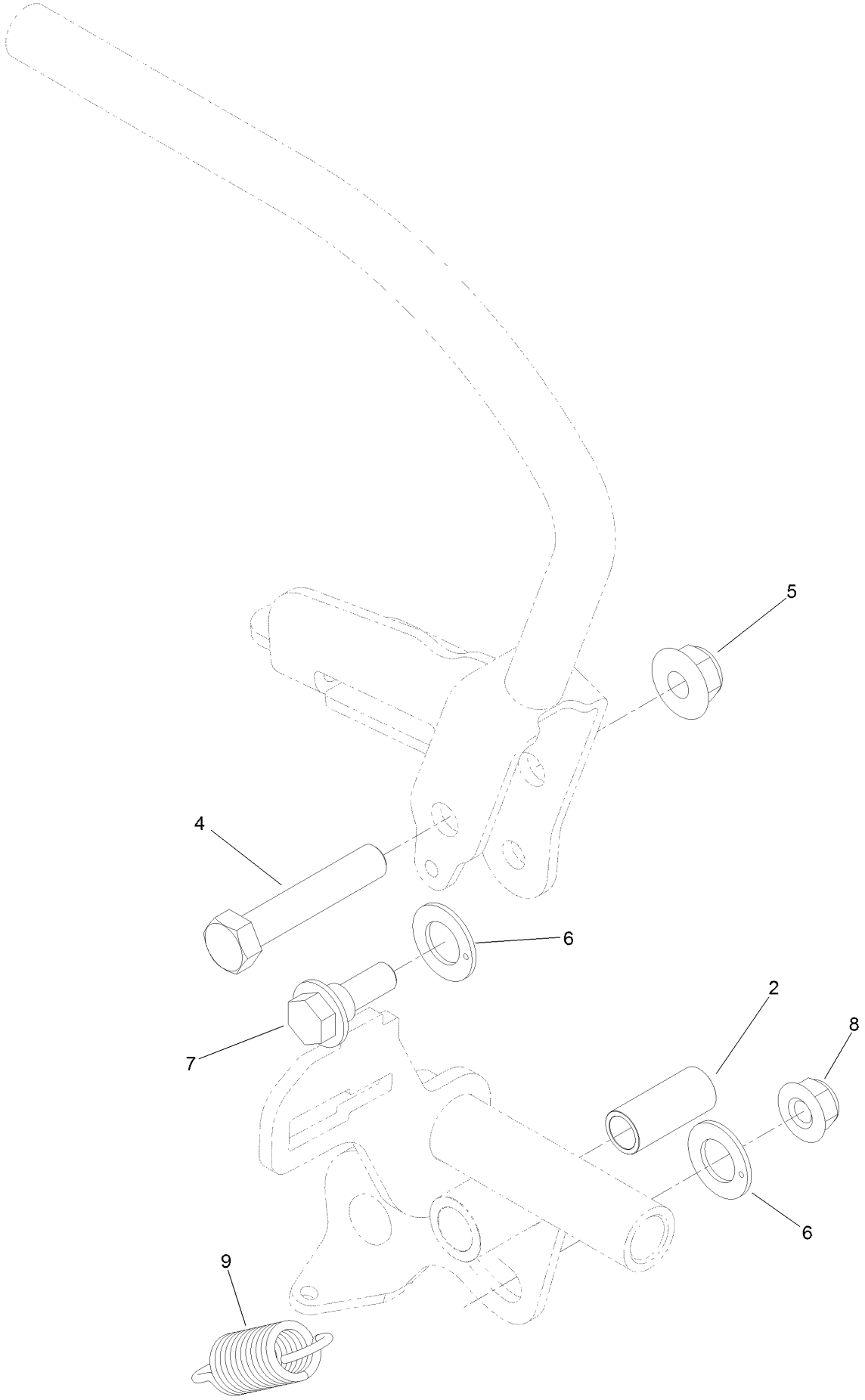

Control Handle Assembly No. 132-5157 (continued)

Ref.	Part Number	Qty.	Description
2	131-3562	1	Bearing-Sleeve
4	323-10	1	Screw-HH
5	104-8301	1	Nut-HF, NI
6	110-7191	2	Washer-Thrust
7	116-2670	1	Screw-Shoulder
8	104-8300	1	Nut-HF, NI
9	132-5146	1	Spring-Extension

Control Handle Assembly No. 132-5158

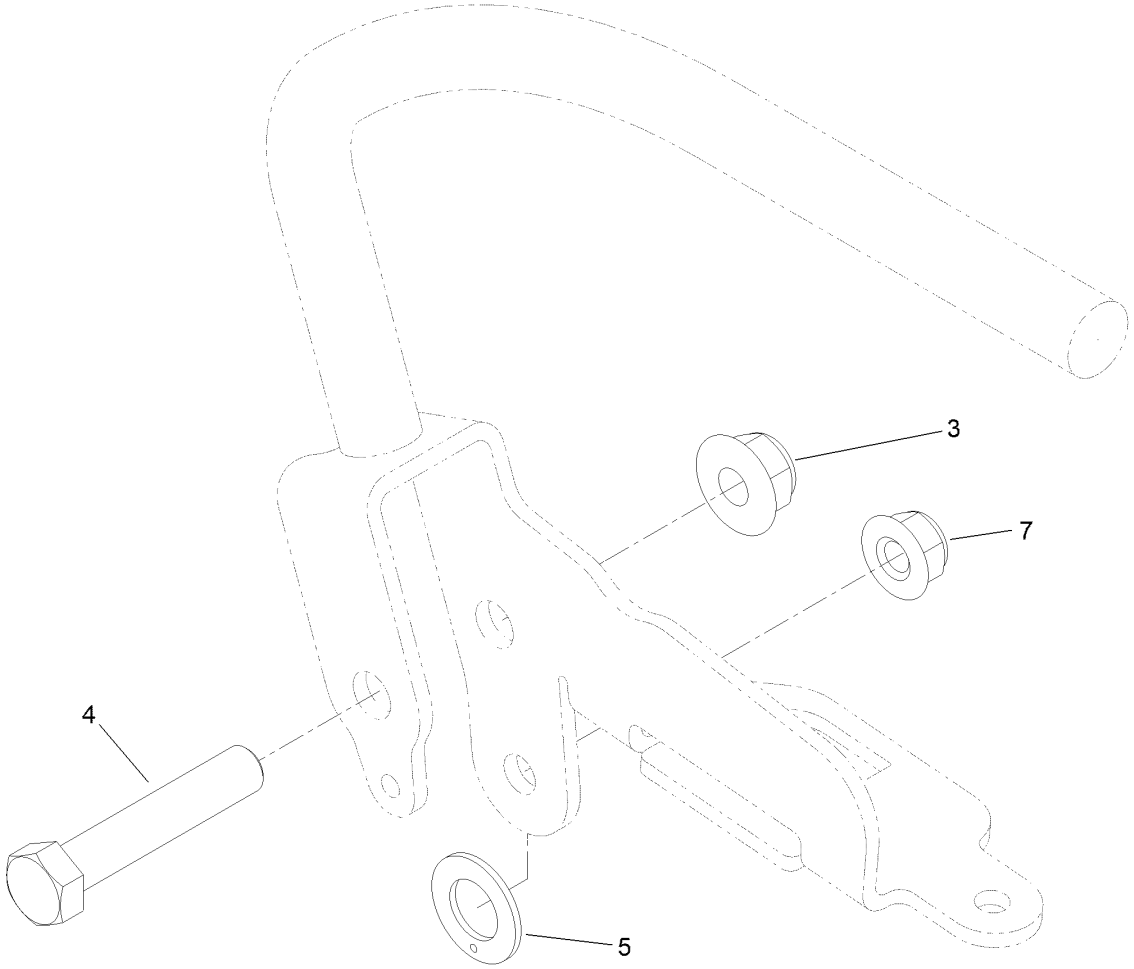

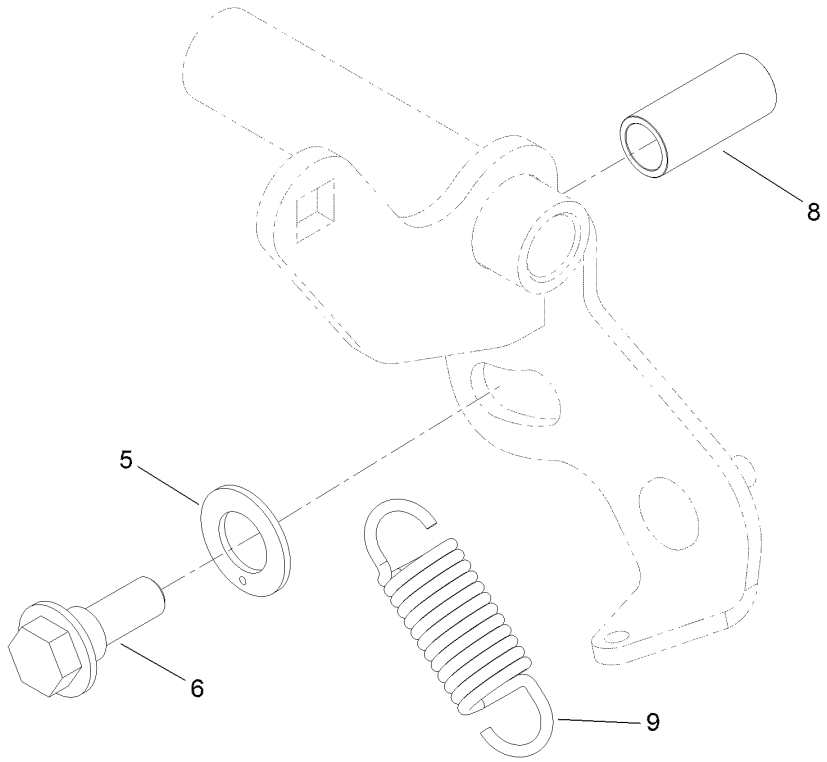

Control Handle Assembly No. 132-5158 (continued)

Ref.	Part Number	Qty.	Description
3	104-8301	1	Nut-HF, NI
4	323-10	1	Screw-HH
5	110-7191	2	Washer-Thrust
6	116-2670	1	Screw-Shoulder
7	104-8300	1	Nut-HF, NI
8	131-3562	1	Bearing-Sleeve
9	132-5146	1	Spring-Extension

Parking Brake Assembly

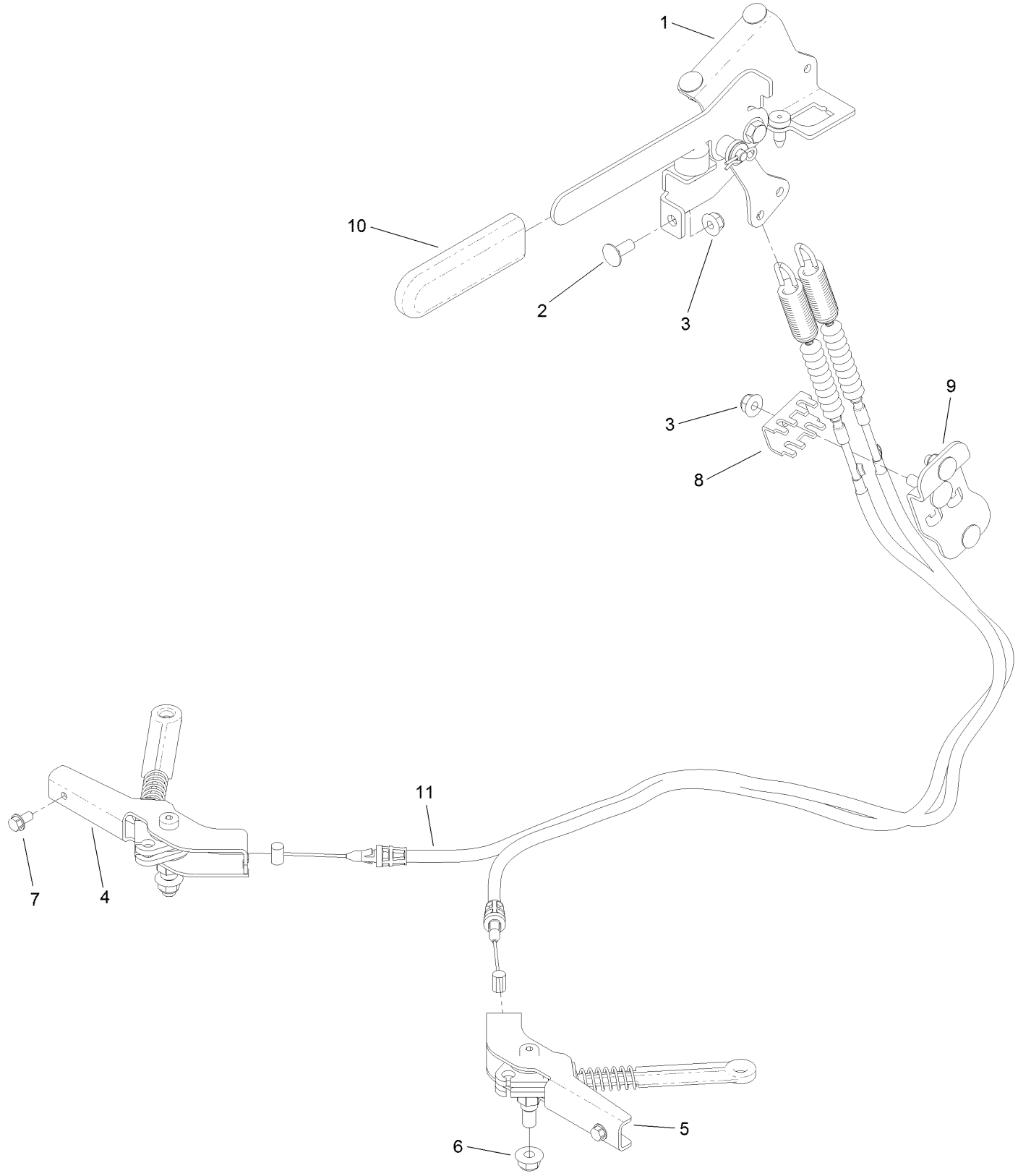

Parking Brake Assembly (continued)

Ref.	Part Number	Qty.	Description
1	132-5170	1	Brake Handle ASM
2	3230-23	5	Bolt-CARR
3	104-8300	6	Nut-HF, NI
4	132-5168	1	RH Brake Caliper ASM
5	132-5169	1	LH Brake Caliper ASM
6	104-8301	2	Nut-HF, NI
7	32144-4	2	Screw-HWH
8	132-1187	1	Clamp-Cable
9	132-7582	1	Mount-Cable, Brake
10	1-633268	1	Grip-Lever
11	131-1195	2	Cable-Brake

Deck Lift Assembly

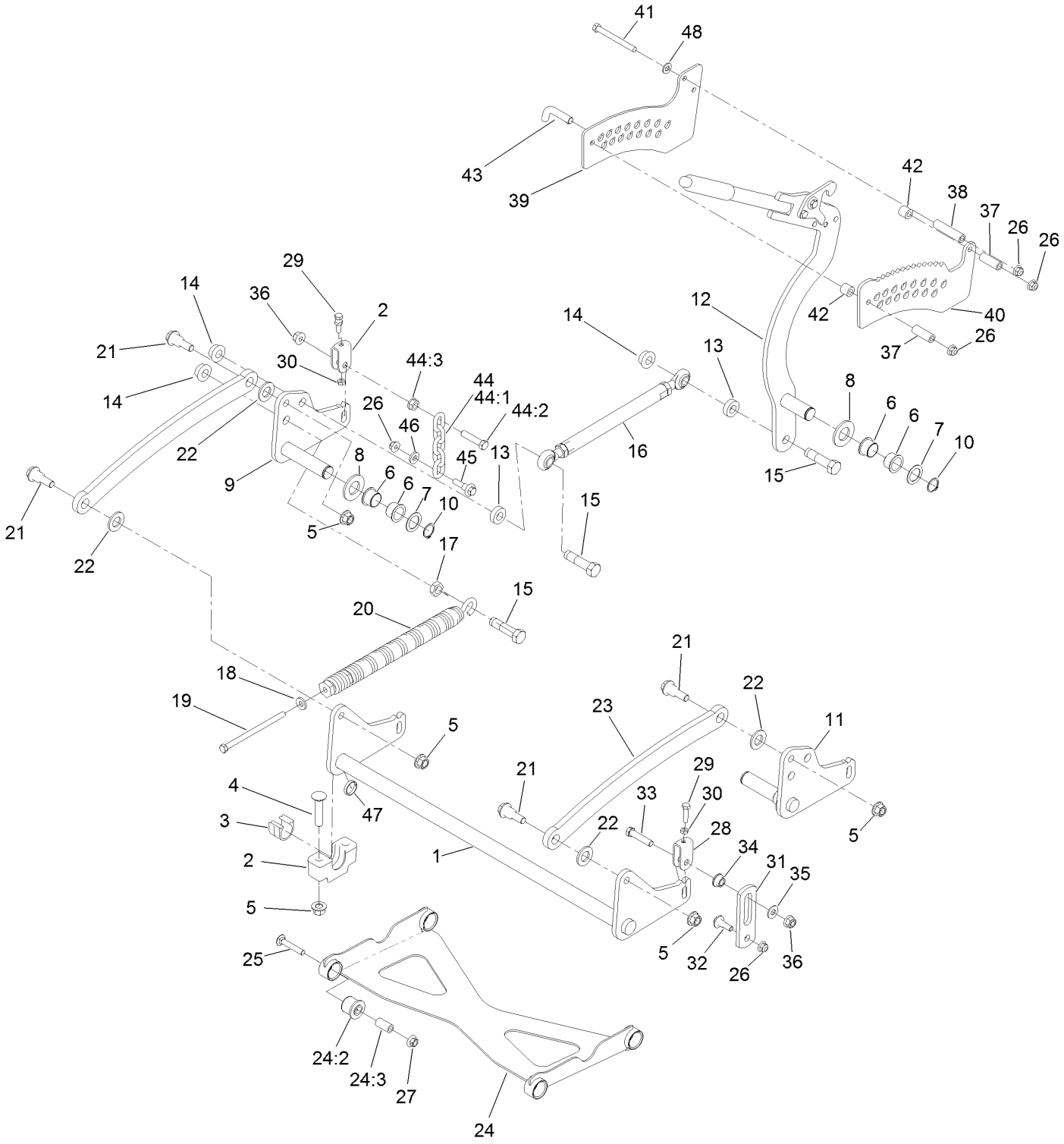

Deck Lift Assembly (continued)

Ref.	Part Number	Qty.	Description
1	120-8405-01	1	Shaft-Cross, Front
2	109-9409	2	Support-Bearing, Cross Shaft (Front)
3	109-9410	2	Bearing-Cross Shaft, Front
4	116-1700	4	Bolt-CARR
5	99-5107	8	Nut-Lock
6	127-0369	6	Bushing
7	10-8110	3	Washer-Thrust
8	3256-62	3	Washer-Flat
9	127-0616-01	1	Arm-Lift, Rear (RH)
10	32151-29	3	Ring-Retaining
11	127-0615-01	1	Arm-Lift, Rear (LH)
12	130-1755	1	HOC Lever ASM
13	119-6223	2	Washer
14	138-4932	3	Nut-Hex Flg
15	138-4931	3	Screw-Lock
16	130-6615	1	HOC Link ASM
17	3218-6	1	Nut-Jam
18	98-5975	1	Washer-Belleville
19	323-58	1	Bolt-TAP, HH
20	116-0886	1	Spring-Extension
21	116-0780	4	Screw-Shoulder, HHF
22	3256-28	4	Washer-Flat
23	127-1948-03	2	Link-Lift
24	137-4129	1	Deck Strut ASM
24:2	137-4108	4	Bushing-Rubber
24:3	108-6544	4	Spacer
25	3231-7	4	Screw-CARR
26	104-8301	7	Nut-HF, NI
27	32128-19	4	Nut-HF Lock,Large Flg
28	109-9066	4	Yoke-Adjust, Deck
29	322-47	4	Screw-HH
30	3218-2	8	Nut-Hex Jam
31	130-6589	2	Link-Lift
32	109-9840	2	Screw-Shoulder, HHF
33	109-9065	2	Screw-HH
34	116-2428	2	Bushing-Flanged
35	3256-4	2	Washer-Flat
36	114-8417	4	Nut-HF, NI
37	95-6448	2	Spacer
38	138-1111	1	Spacer
39	132-7581	1	HOC Plate And Decal ASM
40	138-4887	1	Plate-HOC, Inner
41	323-42	3	Screw-HH
42	121-1760	2	Spacer
43	116-5584	1	Pin-HOC
44	116-0756	2	Deck Lift Chain ASM
44:1	1-633447	1	Chain-Lift, Deck
44:2	109-9065	1	Screw-HH
44:3	32128-37	1	Nut-HF
45	130-0742	2	Bolt-Shoulder
46	43-0940	2	Spacer
47	133-1431	1	Spacer-Split
48	3256-24	3	Washer-Plain

HOC Lever Assembly No. 130-1755

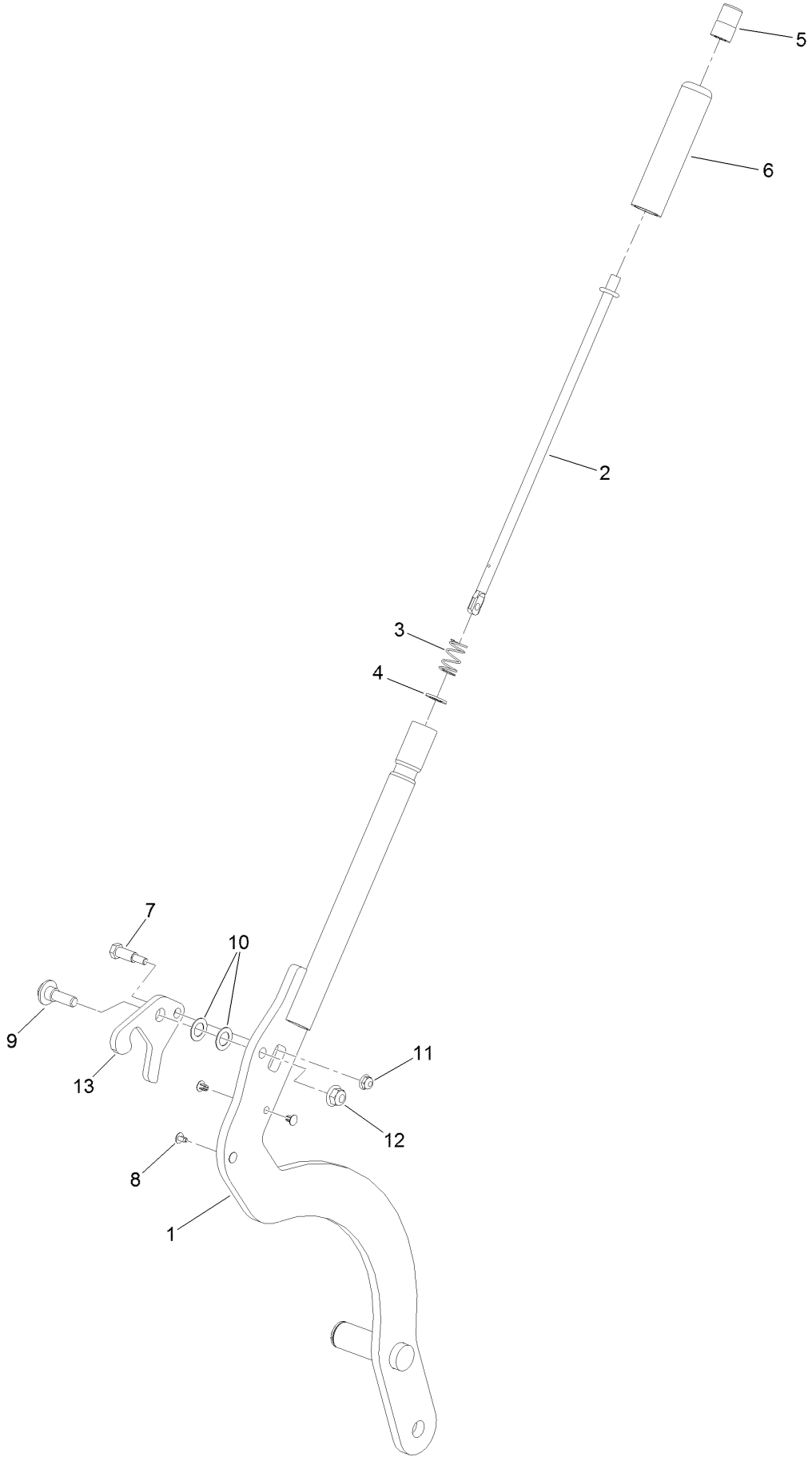

HOC Lever Assembly No. 130-1755 (continued)

Ref.	Part Number	Qty.	Description
1	130-1775-01	1	Lever-Lift
2	136-0530	1	Rod-Latch, Release
3	114-8187	1	Spring-Compression
4	114-1207	1	Washer-Special
5	115-2750	1	Knob
6	115-3592	1	Grip
7	119-2309	1	Bolt-Shldr,HH
8	103-1363	4	Rivet
9	614672	1	Screw-Shoulder, HWH
10	98-1629	2	Washer
11	104-7201	1	Nut-HF, NI
12	104-8301	1	Nut-HF, NI
13	138-4888	1	Latch-HOC

Frame Assembly

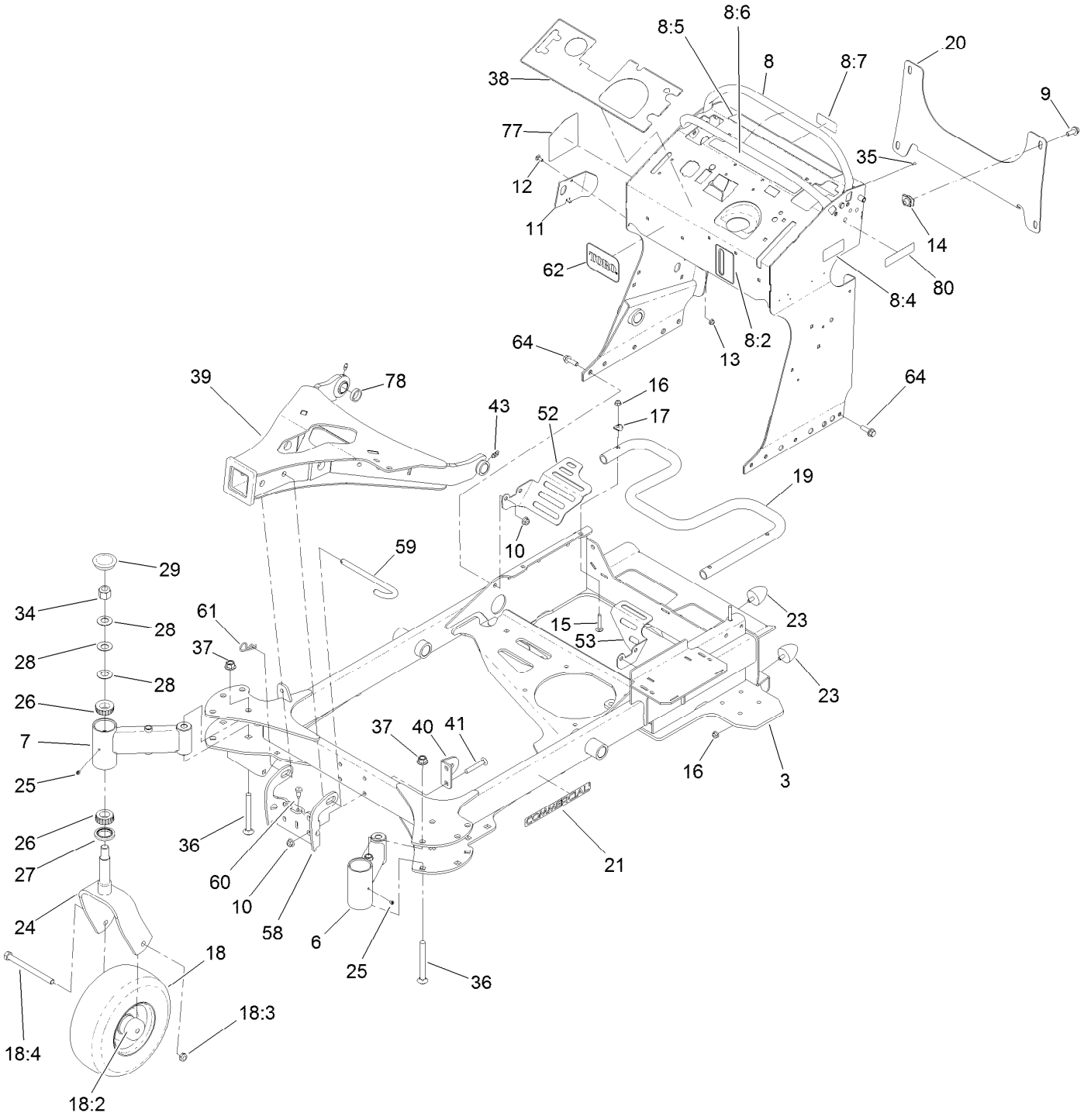

Frame Assembly (continued)

Ref.	Part Number	Qty.	Description
3	131-1510-01	1	Frame
6	131-1523-01	1	Tube-Castor, Short
7	131-1524-01	1	Tube-Castor, Long
8	140-4283	1	Tower Decal ASM
8:2	131-3524	1	Decal-Level, Oil
8:4	116-8775	1	Decal-Fill, Fuel
8:5	139-2878	1	Decal-Warning
8:6	131-3526	1	Decal-Controls
8:7	131-3528	1	Decal-Fuse
9	3234-42	4	Screw-HHF
10	104-8301	12	Nut-HF, NI
11	131-7455	1	Plate-Striker
12	3229-11	1	Screw-CARR
13	104-7201	1	Nut-HF, NI
14	105-4886	4	Nut-Tinnerman
15	3230-5	3	Bolt-CARR
16	104-8300	7	Nut-HF, NI
17	107-3844	3	Washer
18	140-1890	2	Wheel, Tire And Bearing ASM
18:2	103-2768	2	Guard-Seal
18:3	3296-45	1	Nut-Hex
18:4	325-20	1	Screw-HH
19	132-5161-01	1	Tube-Mount, Fuel Tank
20	132-1145-03	1	Bracket-Cross
21	117-3591	2	Decal-Commercial
23	114-1926	4	Bumper-Rubber
24	121-7988-01	2	Fork-Caster
25	1-811010	2	Plug
26	1-543509	4	Bearing-Roller, Tapered
27	116-5647	2	Seal-Grease
28	1-633508	6	Washer-Bellville
29	103-4882	2	Cap-Grease
34	3296-51	2	Nut-Lock, NI
35	3290-271	2	Rivet-Pop
36	3233-7	4	Screw-CARR
37	99-5107	4	Nut-Lock
38	140-4260	1	Decal, Multi-Force
39	133-4662-03	1	A-Frame
40	127-0649-01	2	Bracket-Cylinder
41	3231-44	4	Screw-CARR
43	302-40	1	Fitting-Grease, 90 DEG
52	132-7578-01	1	Guard-Fan, RH
53	132-7598-01	1	Guard-Fan, LH
58	133-5320-01	1	Bracket-Lock
59	133-2021	1	Pin-Hitch
60	87-8460	2	Bumper-Rubber
61	92-2762	1	Pin-Hair
62	126-5060	1	Decal-Logo, Toro
64	119-4061	8	Screw-HHF
77	133-4648	1	Decal Service-Multiforce
78	116-6758	1	Spacer
80	133-8062	1	Decal-Spark Arrestor

Wheel and Bearing Assembly

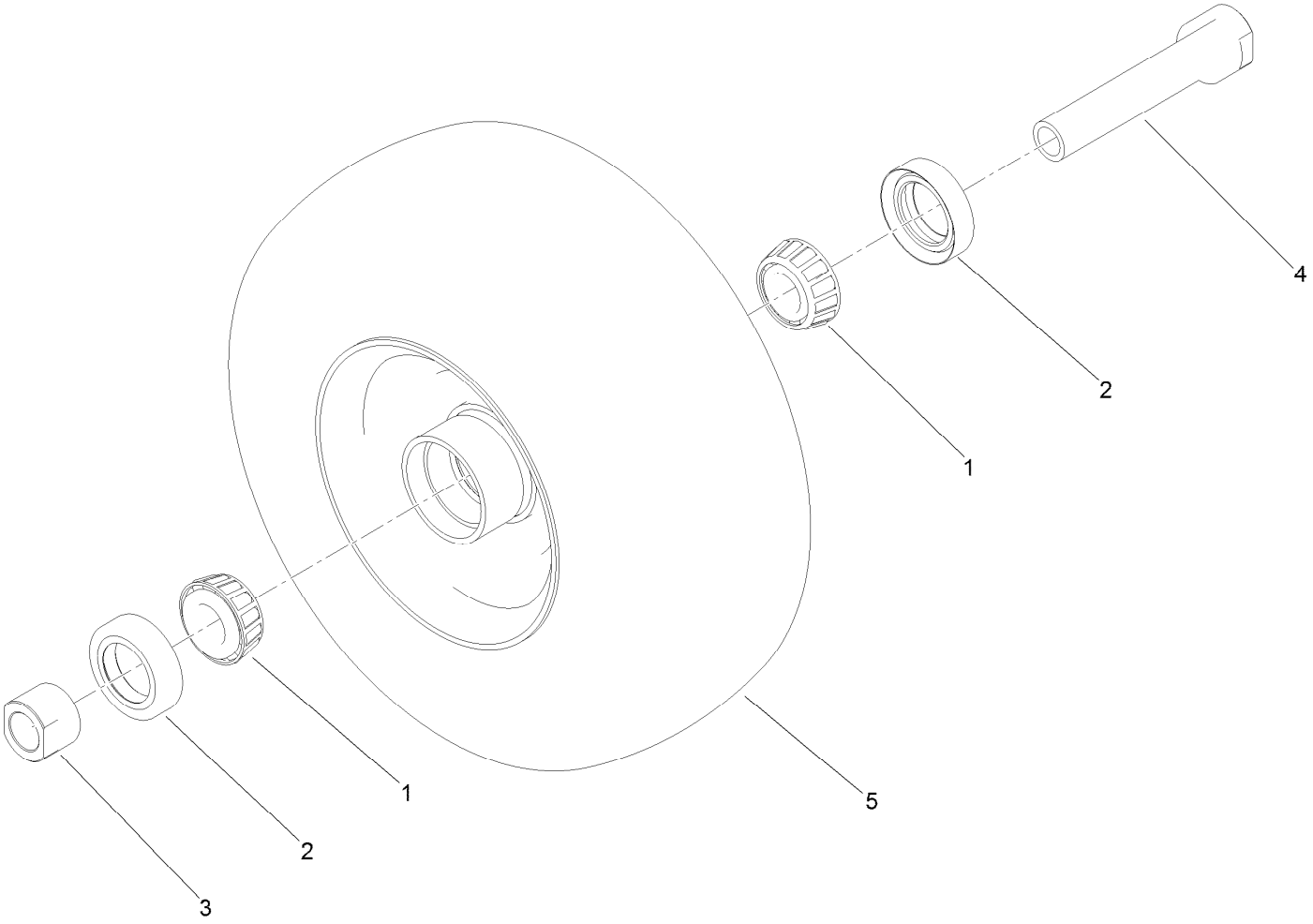

Wheel and Bearing Assembly (continued)

Ref.	Part Number	Qty.	Description
1	1-633585	2	Bearing-Cone, Taper
2	103-0063	2	Seal-Caster
3	103-3051	1	Spacer-Nut
4	126-5359	1	Caster Axle ASM
5	140-1892	1	Wheel And Tire ASM

Platform Assembly

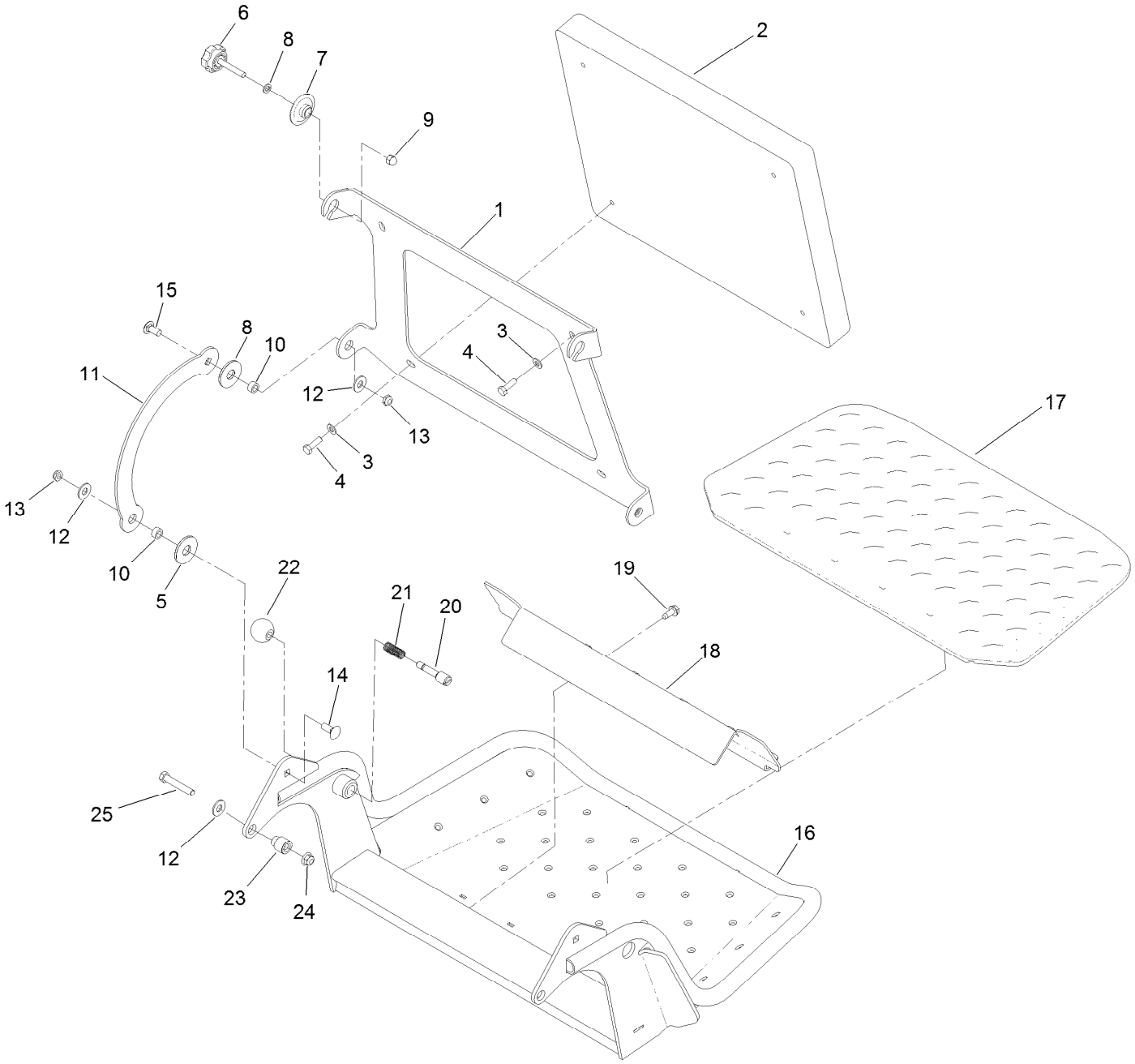

Platform Assembly (continued)

Ref.	Part Number	Qty.	Description
1	120-8499-03	1	Hinge-Pad
2	117-9739	1	Pad-Cushion
3	3256-23	4	Washer-Plain
4	121-7999	4	Screw-HH, Patch
5	114-0463	4	Washer-Friction, Composite
6	133-1426	2	Knob
7	116-2886	2	Slide-Bushing
8	3253-4	2	Washer-Lock
9	131-4535	2	Nut-Acorn
10	111044	4	Spacer
11	114-1915-01	2	Link-Pad
12	3256-4	6	Washer-Flat
13	3296-59	4	Nut-Lock, NI
14	3231-2	2	Bolt-CARR
15	3231-27	2	Screw-CARR
16	120-8475-01	1	Platform
17	126-7157	1	Mat-Platform
18	3345-771	1	Shield Clamp Kit
19	32144-70	2	Screw-HWHTF
20	119-8650	1	Pin-Latch
21	114-5348	1	Spring
22	1-603175	1	Knob-Ball
23	132-7583	2	Bushing-Flanged
24	104-8301	2	Nut-HF, NI
25	323-45	2	Screw-HH

Engine Assembly

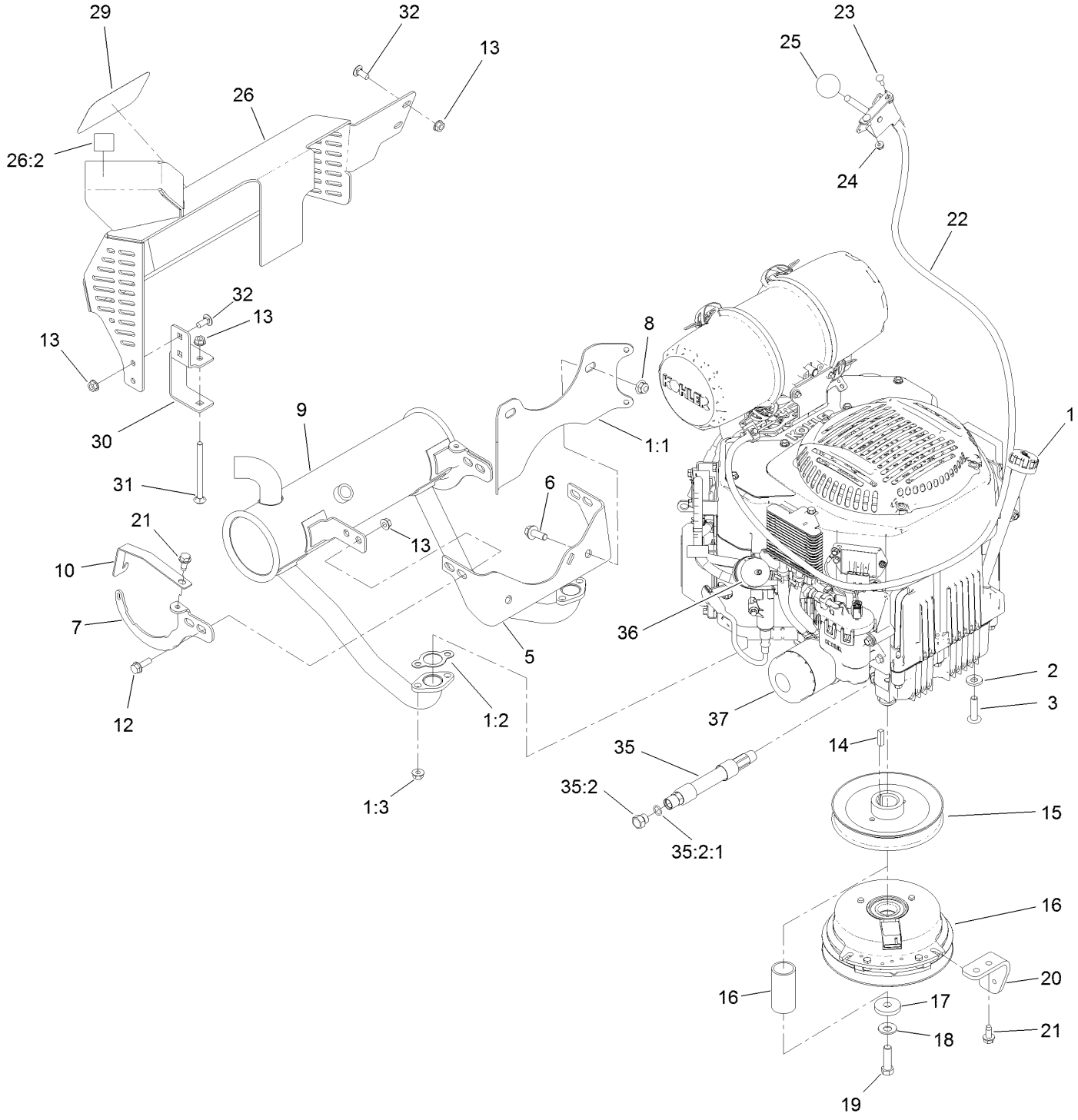

Engine Assembly (continued)

Ref.	Part Number	Qty.	Description
1	131-1159	1	Engine-Kohler, Ecv749 ●
1:1	131-7400	1	Bracket-Muffler
1:2	110-6697	2	Gasket-Exhaust
1:3	68-9400	4	Nut-Flange
2	98-5975	4	Washer-Belleville
3	126-0983	4	Screw-BHTF
5	132-1168	1	Bracket-Muffler
6	3234-42	2	Screw-HHF
7	133-4613	2	Support-Muffler
8	104-8301	2	Nut-HF, NI
9	133-4634	1	Muffler-Kohler
10	133-4639	2	Bracket-Muffler, Koh
12	3234-17	4	Screw-HHF
13	32128-25	9	Nut-HF
14	1-807259	1	Key
15	120-8498	1	Pulley
16	139-7910	1	Clutch-200Cms
17	107-4136	1	Washer-Flat
18	1-603610	1	Washer-Spring
19	3212-6	1	Screw-HH
20	131-3586-03	1	Stop-Clutch
21	32144-70	4	Screw-HWHTF
22	132-5152	1	Throttle ASM
23	1-807533	2	Bolt-CARR
24	32128-17	2	Nut-Lock, Flange
25	1-603175	1	Knob-Ball
26	131-3550	1	Muffler Guard ASM
26:2	106-5517	1	Decal-Warning
29	94-2579	1	Decal
30	131-3530-03	1	Bracket-Mounting, Guard
31	106-9758	1	Screw-CARR
32	3230-23	4	Bolt-CARR
35	133-4657	1	Hose ASM
35:2	353-508	1	Plug-HH
35:2:1	237-42	1	O-Ring
36	94-9695	1	Filter-Fuel
37	98020	1	Filter-Oil

● Obtain parts from www.kohlerplus.com

Fuel Tank Assembly

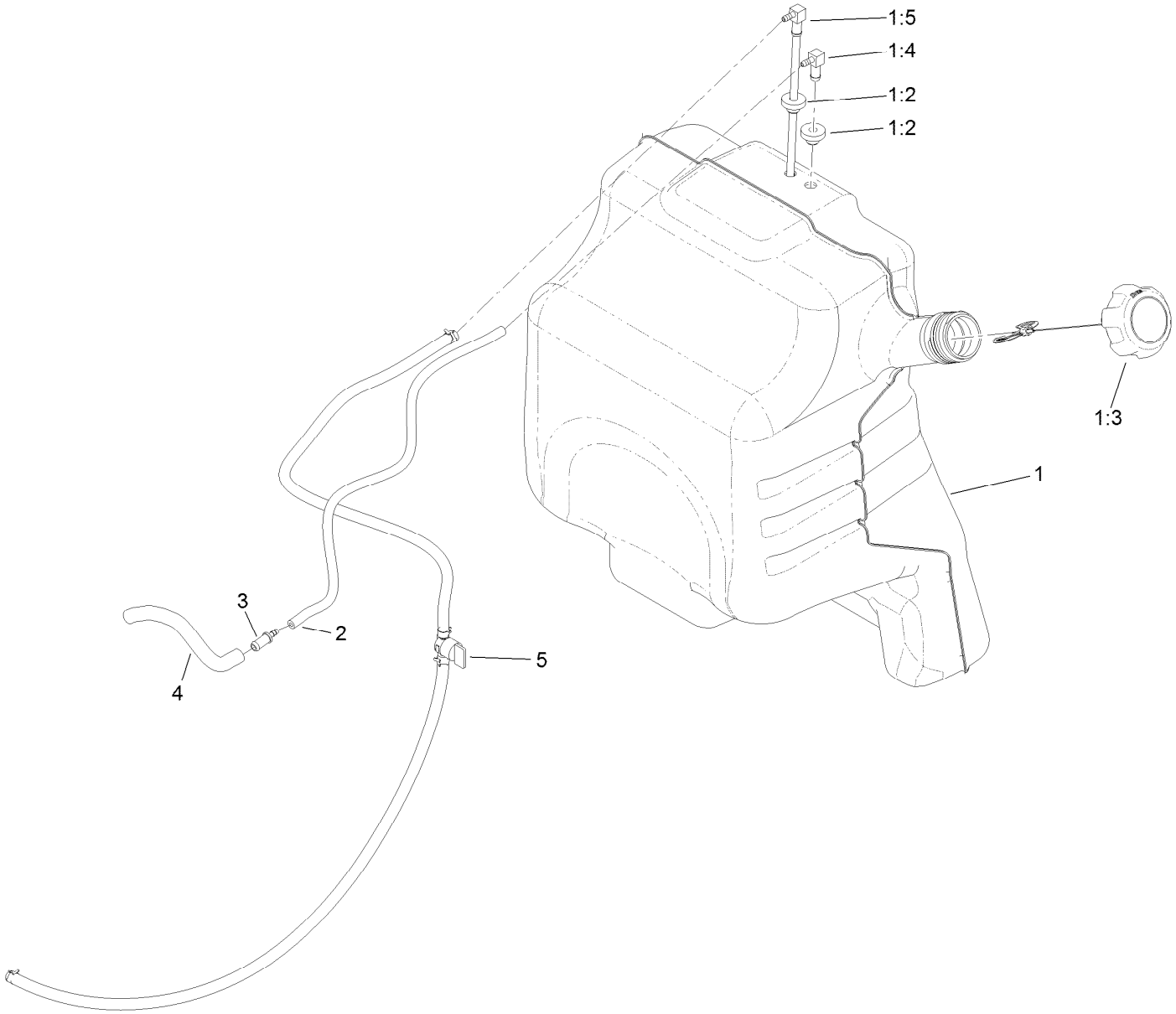

Fuel Tank Assembly (continued)

Ref.	Part Number	Qty.	Description
1	132-7560	1	Fuel Tank ASM
1:2	46-6560	2	Bushing
1:3	137-4127	1	Cap-Fuel
1:4	104-5228	1	Fitting-Elbow, 90 DEG
1:5	132-7559	1	*obs* Fuel Tube ASM
2	110-8255	1	Hose-Fuel
3	98-2952	1	Fitting-Straight
4	132-7576	1	Hose-Fuel
5	132-7545	1	Fuel Line ASM

Wire Harness Assembly

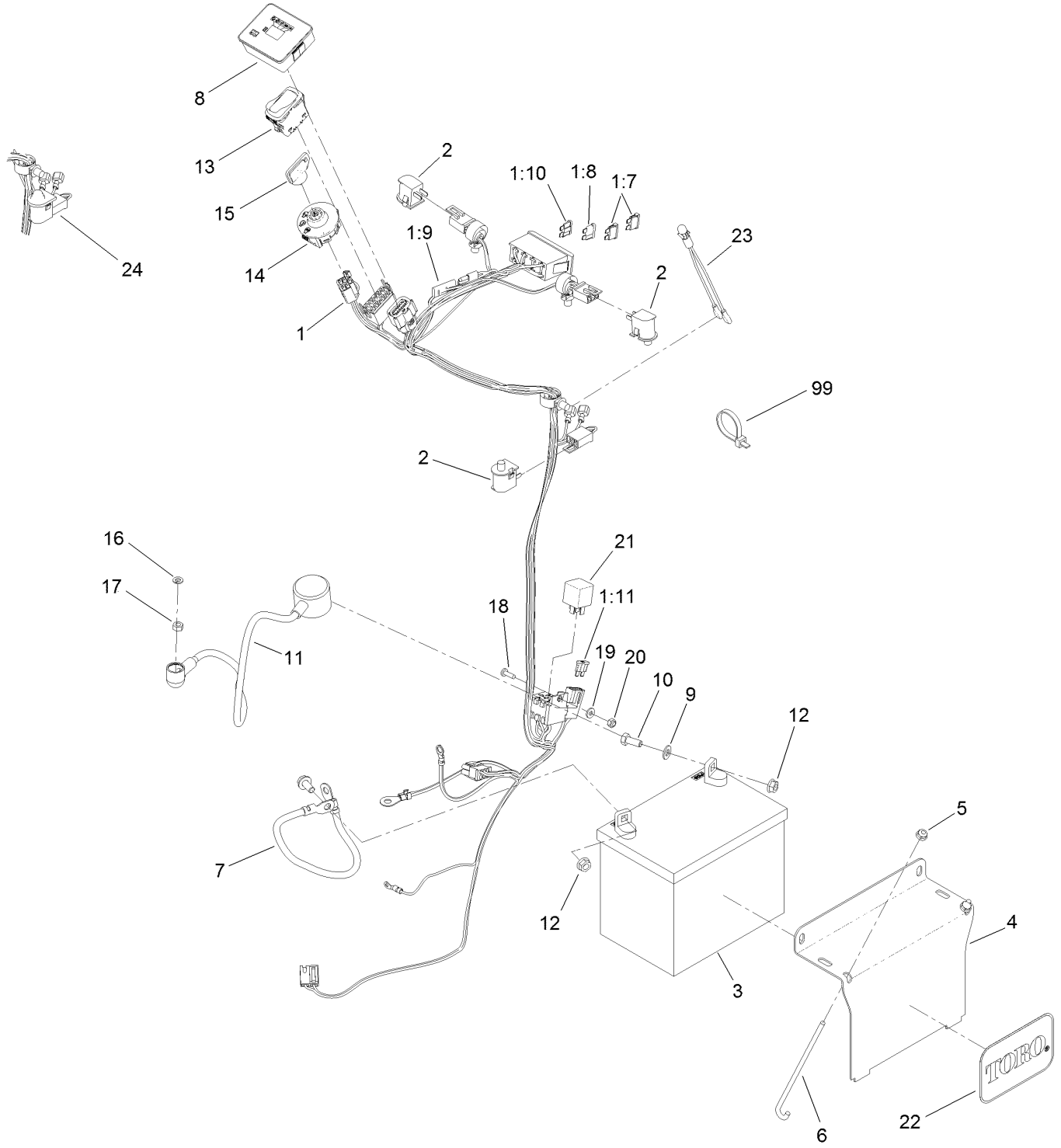

Wire Harness Assembly (continued)

Ref.	Part Number	Qty.	Description
1	138-8899	1	Harness-Wire, Grandstand
1:7	109355	2	Fuse-Blade, 15 Amp
1:8	218-578	1	Fuse-Blade, 10 Amp
1:9	116-0053	1	Cap-Plug
1:10	114241	1	Fuse-Blade, 7.5 Amp
1:11	109101	1	Fuse-Blade, 20 Amp
2	82-2190	2	Switch-Bail
3	104-8162	1	Battery
4	130-6635-01	1	Bracket-Hold Down, Battery
5	104-7201	2	Nut-HF, NI
6	1-633651	2	Bolt-Holddown
7	112-7063	1	Cable-Battery, Black
8	130-6570	1	Module-Meter, Hour
9	3256-23	2	Washer-Plain
10	322-3	2	Screw-HH
11	115-3864	1	Cable-Battery, Positive
12	109-5715	2	Nut-HHF, Smooth
13	139-6367	1	Switch-Rocker, (On)-On-Off
14	137-4101	1	Switch-Ignition
15	63-8360	1	Key-Ignition
16	3253-3	1	Washer-Lock
17	3217-5	1	Nut-Hex
18	3290-500	1	Screw-PPH
19	3256-14	1	Washer-Flat
20	3296-2	1	Nut-Lock, NI
21	1-643275	1	Relay
22	67-1300	1	Decal
23	1-643267	1	Indicator-LED, Red
24	133-4654	1	Switch-Plunger
99	3290-378	4	Tie-Cable

Attachments and Accessories

For 72529 GrandStand Multi Force Mower With 52in TURBO FORCE Cutting Unit

Product Name	Model/Part
Air Cleaner Filter	100-4556
Filter Air Safety	103-1326
Turbo Baffle Kit	107-1634
Hypr-Oil 500 (quart)	114-4713
Hypr-Oil 500 (gallon)	114-4714
Hypr-Oil 500-5 (5 gallon)	114-4715
Harness Wire Splitter	121-5988
Spark Plug	130-8380
Fuel Filter	130-8381
Toro Premium Fuel Treatment 12oz Bottle	131-6572
Hydro Filter Kit	132-4743
Speed Setting Tool	132-7595
Roller Striper Kit	133-1436
Light Kit	133-1437
Electric Accessory Port	133-1438
HOC Set Blocks	133-1439
Anti-Scalp Kit, 48/52 Grandstand Deck	133-1440
Trimmer Rack	133-1441
Hydro Oil Change Kit	133-1457
Strobe Light Kit	133-1495
5 Gallon Bucket	133-2533
Wheel Weight Kit	133-5386
Quick-Attach-Male	136-0513
Hydraulic Cap Lock Kit	136-5420
Case Drain Kit	136-7436
Multiforce EC Float Kit	136-8350
Broom Rubber Flap Kit	137-3920
Lift Cylinder Lock Kit	137-4106
Bagger Enhancement Kit	139-1529
Idler Kit, Blower Kit for GrandStand Multi Force Mower	139-1546
Starter Fuse Kit, GrandStand Mower	139-5555
Recycler Kit	139-6653
18x8.5n10 X-Tweel Turf	139-7890
6in Hose Kit, E-Z Vac Twin Bagger, 2016 and After Grandstand Mower	139-7930
Blower Upgrade Kit, Twin Bagger, 2016 and After Grandstand Mower	139-7940
Blade-18.00 High Flow	140-1242
Snow Tire Kit	140-4310
Pneumatic Castor Wheel Kit	140-4311
Blade-18.00 Medium Flow	140-4856
Blade-18.00 Low Flow	140-4857
Blade-18.00 Atomic	140-4858
Blade-18.00 Recycler	140-4859
6 Pack-Blade, 18.00 High Flow	140-4882
6 Pack-Blade, 18.00 Med Flow	140-4883
6 Pack-Blade, 18.00 Low Flow	140-4884

Attachments and Accessories (continued)

6 Pack-Blade, 18.00 Atomic	140-4885
6 Pack-Blade, 18.00 Recycler	140-4886
Soft Bag (3 Bushel)	30104
10W30 4-Cycle Engine Oil (32oz Bottle)	38280
Toro 4-Cycle SAE 30 Oil (32oz Bottle)	38903
Twin Bagger Kit	78524
Blower Drive 52in	78526
E-Z Vac Bagger	78570
52in E-Z Vac Blower Drive Kit	78575
Pro Force Blower	78593
Grandstand Multi Force Broom	78596
48in Snowthrower, Multi-Force	78598
Grandstand Multi Force High-Flow Kit	78601
Dethatcher, 46in Multi Force	78690
Dethatcher Mount	78691
Aerator, 38in Multi Force	78694
Aerator Mount, Multi Force	78695
Leaf Plow Without Mount	78697
Spark Arrestor	98-9099
Filter-Oil	98020
Kit-Grandstand, Filter, Winter	HYD14084
Snow Deflector	MSC04587B
Straight Blade, ATV Plow Shoe Kit	MSC13040
Blade Extension Kit,6in,stb	MSC13850B
Grandstand Low Flow Hydraulics Kit	MSC13950
Grandstand Side Plow Kit	MSC13960
Kit-Plow Side,4'0"STB,Grandstand	MSC14780
Blade Crate (Snowplow), ATV Poly S	STB13567B
Blade Crate (snowplow),4-0,atv Poly S	STB13759B
Urethane Edge Kit	STB13801
Plug-Quick Connect	T56152150
Cap-Connect, Quick	T56152152

Notes:

Notes:



Count on it.