Form No. 3327-901 Rev A

CCR™ 3650 GTS®
Snowthrower
Model No. 38517—Serial No. 230000001 and Up

Operator's Manual

Introduction

Read this manual carefully to learn how to operate and maintain your product properly and to avoid injury and product damage. You are responsible for operating the product properly and safely.

Whenever you need service, genuine Toro parts, or additional information, contact an Authorized Service Dealer or Toro Customer Service and have the model and serial numbers of your product ready. The illustration below identifies the location of the model and serial numbers on the product. Write the numbers in the space provided below:

Model #:

Serial #:

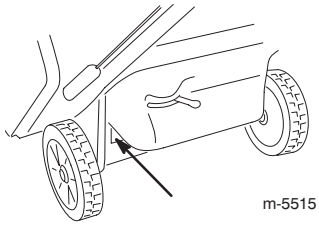
m-5515

This manual identifies potential hazards and has safety messages identified by the following words:

- **Danger** signals an extreme hazard that **will** cause serious injury or death if you do not follow the recommended precautions.
- **Warning** signals a hazard that **may** cause serious injury or death if you do not follow the recommended precautions.
- **Caution** signals a hazard that may cause minor or moderate injury if you do not follow the recommended precautions.

This manual uses 2 other words to highlight information. Important calls attention to special mechanical information and **Note:** emphasizes general information worthy of special attention.

Warning

The engine exhaust from this product contains chemicals known to the State of California to cause cancer, birth defects, or other reproductive harm.

Important: This engine is not equipped with a spark arrester muffler. It is a violation of California Public Resource Code Section 4442 to use or operate this engine on any forest-covered, brush-covered, or grass-covered land. Other states or federal areas may have similar laws.

This spark ignition system complies with Canadian ICES-002.

Safety

This snowthrower meets or exceeds the B71.3 specifications of the American National Standards Institute in effect at the time of production.

Read and understand the contents of this manual before the engine is ever started.

⚠ This is the safety alert symbol. It is used to alert you to potential personal injury hazards. Obey all safety messages that follow this symbol to avoid possible injury or death.

Improperly using or maintaining this snowthrower could result in injury or death. To reduce this potential, comply with the following safety instructions.

The following instructions have been adapted from the ANSI/OPEI standard B71.3–1995 and the ISO 8437:1989 standard.

Training

- Read the operator's manual carefully. Be thoroughly familiar with the controls and the proper use of the equipment. Know how to stop the unit and disengage the controls quickly.
- Never allow children to operate the snowthrower. Never allow adults to operate the snowthrower without proper instruction.
- Keep the area of operation clear of all persons (particularly small children) and pets.
- Exercise caution to avoid slipping or falling.

Preparation

- Thoroughly inspect the area where you will use the snowthrower. Remove all doormats, sleds, boards, wires, and other foreign objects.
- Release the control bar to disengage the rotor blades before starting the engine.

Printed in USA
Original Instructions (EN)

© 2003 by The Toro Company
All Rights Reserved

- Do not operate the snowthrower without wearing adequate winter garments. Wear footwear that will improve your footing on slippery surfaces.
- Handle fuel with care; it is highly flammable.
  - Use an approved fuel container.
  - Never add fuel to a running or hot engine.
  - Fill the fuel tank outdoors with extreme care. Never fill the fuel tank indoors.
  - Replace the fuel tank cap securely and wipe up any spilled fuel.
- Use only the power cord supplied with the snowthrower and a receptacle appropriate for use with the power cord for electric-start motors.
- Never attempt to make any adjustments while the engine is running, except where specifically recommended by Toro.
- Let the engine and the snowthrower adjust to the outdoor temperature before starting to clear snow.
- Operating any powered machine can result in foreign objects being thrown into the eyes. Always wear safety glasses or eye shields while operating, adjusting, or repairing the snowthrower.

Operation

- Do not put hands or feet near or under rotating parts. Keep clear of the discharge opening at all times.
- Exercise extreme caution when crossing gravel drives, walks, or roads. Stay alert for hidden hazards or traffic.
- Do not attempt to clear snow from a crushed-rock or gravel surface. This product is intended for use only on paved surfaces.
- After striking a foreign object, stop the engine, remove the ignition key, thoroughly inspect the snowthrower for any damage, and repair the damage before operating the snowthrower.
- If the unit should start to vibrate abnormally, stop the engine and check immediately for the cause. Vibration is generally a warning of trouble.
- Stop the engine whenever you leave the operating position, before unclogging the discharge chute, and when making any repairs, adjustments, or inspections.
- When cleaning, repairing, or inspecting, make certain that the rotor blades and all moving parts have stopped.
- Do not run the engine indoors, except when starting it and for moving the snowthrower in or out of the building. Open the outside doors; exhaust fumes are dangerous.
- Do not clear snow across the face of slopes. Exercise extreme caution when changing direction on slopes. Do not attempt to clear steep slopes.
- Never operate the snowthrower without proper guards, plates, or other safety protective devices in place.
- Never operate the snowthrower near glass enclosures, automobiles, window wells, and drop-offs without properly adjusting the snow discharge angle. Keep children and pets away.
- Do not overload the machine capacity by attempting to clear snow at too fast a rate.
- Look behind and use care when backing up with the snowthrower.
- Never direct the discharge at bystanders or allow anyone in front of the unit.
- Never operate the snowthrower without good visibility or light. Always be sure of your footing, and keep a firm hold on the handle. Walk; never run.

Maintenance and Storage

- Check all fasteners at frequent intervals for proper tightness to be sure that the equipment is in safe working condition.
- Never store the machine with fuel in the fuel tank inside a building where ignition sources are present, such as hot water and space heaters and clothes dryers. Allow the engine to cool before storing in any enclosure.
- Always refer to this operator's manual for important details if the snowthrower is to be stored for an extended period.
- Maintain or replace safety and instruction labels when necessary.

Toro Snowthrower Safety

The following list contains safety information specific to Toro products or other safety information that you must know.

- **Rotating rotor blades can injure fingers or hands.** Stay behind the handles and away from the discharge opening while operating the snowthrower. **Keep your face, hands, feet, and any other part of your body or clothing away from moving or rotating parts.**
- Before adjusting, cleaning, repairing, and inspecting the snowthrower, and before unclogging the discharge chute, **stop the engine, remove the key, and wait for all moving parts to stop**.
- Use a stick, **not your hands**, to remove obstructions from the discharge chute.

- **Before** leaving the operating position, stop the engine, remove the key, and wait for all moving parts to stop.
- Do not wear loose-fitting clothing that could get caught in moving parts.
- If a shield, safety device, or decal is damaged, illegible, or lost, repair or replace it before beginning operation. Also, tighten any loose fasteners.
- **Do not** smoke while handling gasoline.
- **Do not** use the snowthrower on a roof.
- Do not touch the engine while it is running or soon after it has stopped because the engine may be hot enough to cause a burn.
- Perform only those maintenance instructions described in this manual. Before performing any maintenance, service, or adjustment, stop the engine, remove the key, and disconnect the wire from the spark plug. If major repairs are ever needed, contact your Authorized Service Dealer.
- Do not change the governor settings on the engine.
- When storing the snowthrower for more than 30 days, drain the fuel from the fuel tank to prevent a potential hazard. Store fuel in an approved fuel container. Remove the key from the ignition switch before storing the snowthrower.
- Purchase only genuine Toro replacement parts and accessories.

Safety/Instruction Decals

Important: Safety and instruction decals are located near areas of potential danger. Replace damaged decals.

French translation of U.S. EPA decal text:

Ce moteur est conforme à la réglementation antipollution Phase EPA relative aux moteurs ULGE.

Famille : XXXXX.XXXXXX

Nº de modèle : XXX–XXXX

CYLINDREE (CC) : 141

Pour plus de détails sur la sécurité, l'entretien et les réglages, reportez-vous au manuel de l'utilisateur. Nº de téléphone des services de vente et d'après-vente aux Etats-Unis : 1-800-526-6937

The Toro Company
Bloomington, MN

INFORMATION IMPORTANTE CONCERNANT LE MOTEUR

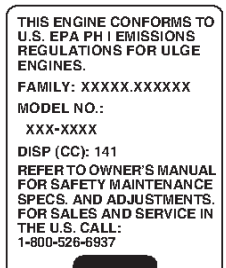



104-2775



104-4135

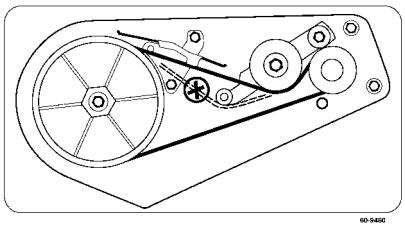

60-9480



104-2767

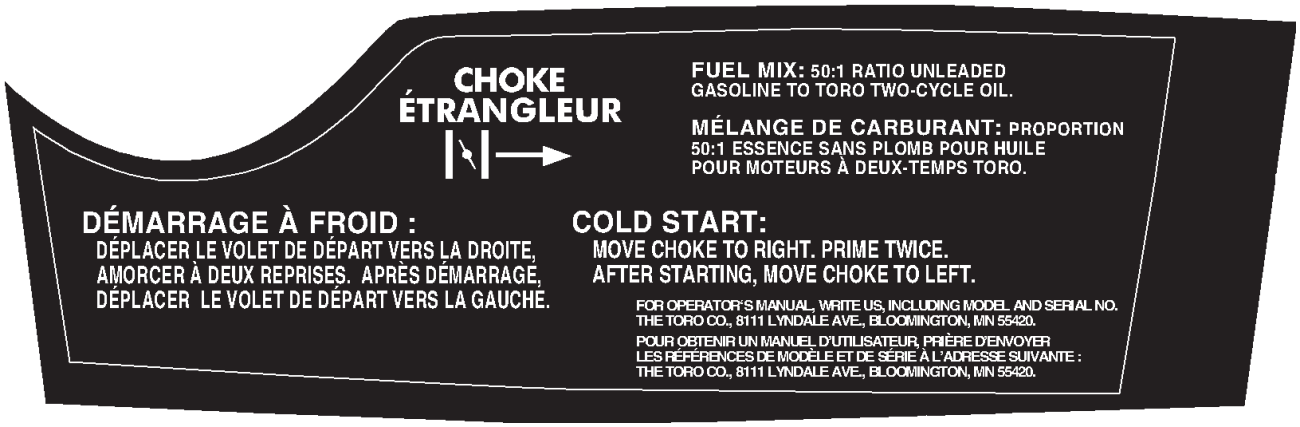

105-1978

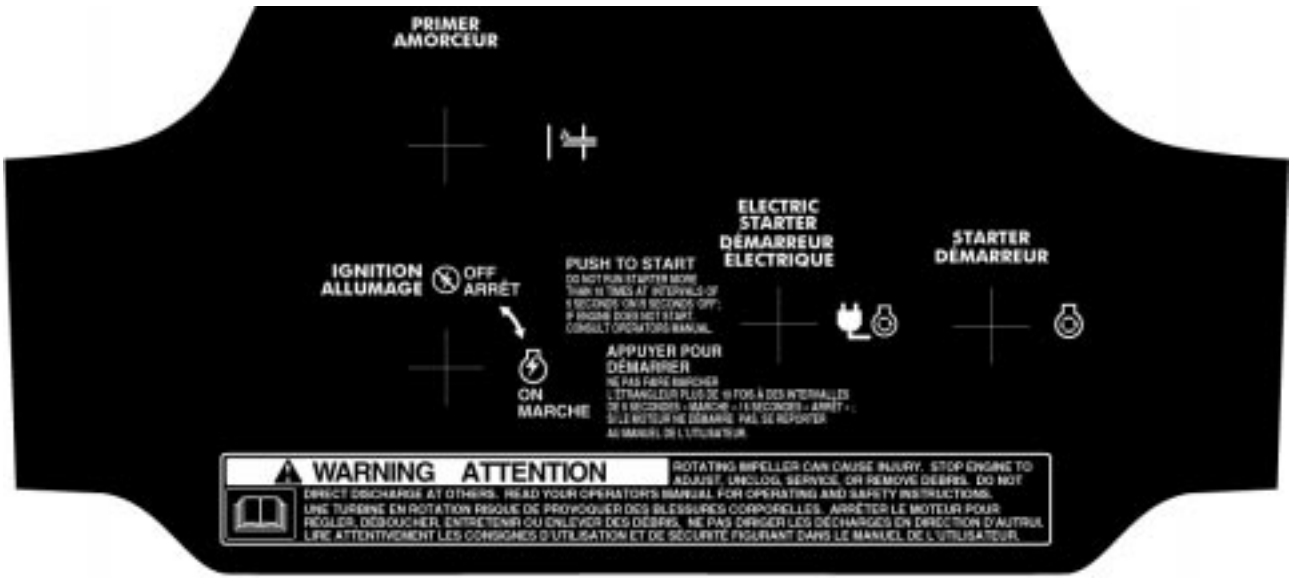

105-3523

Product Overview

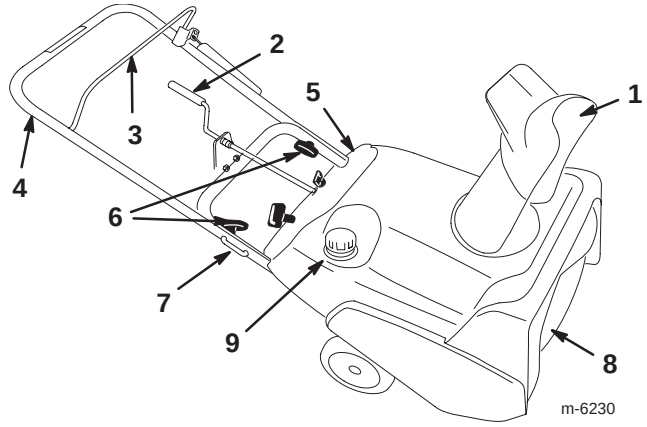

1. Discharge chute
2. Chute crank
3. Control bar
4. Handle
5. Control panel
6. Knobs
7. Handle bolt (2)
8. Rotor blades
9. Fuel tank cap

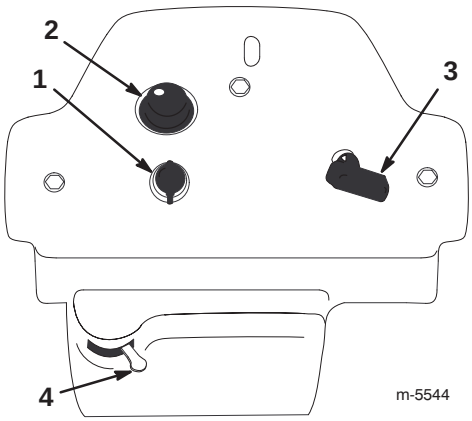

1. Key switch
2. Primer
3. Recoil start
4. Choke lever

Setup

Installing the Handle

1. Cut the plastic tie that secures the control cable to the handle.

2. Position the upper handle as shown.

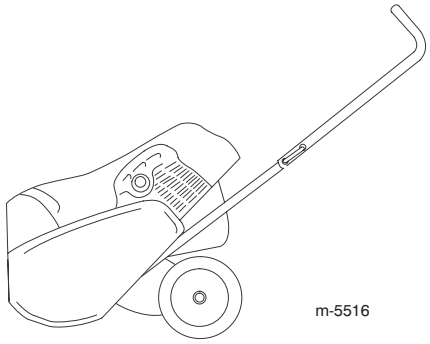

3. Loosely install the handle bolts, curved washers, and knobs as shown.

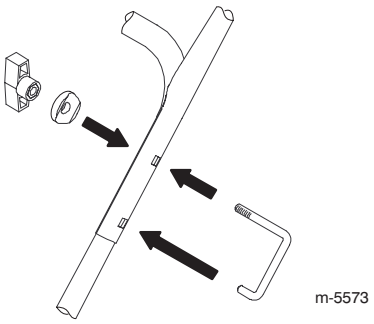

4. Hook the end of the control cable into the bottom hole of the control bar.

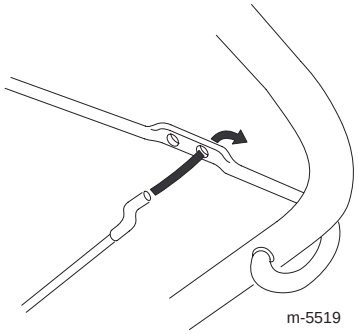

5. Fully insert the handle bolts.

Important: Ensure that you do not pinch the control cable.

6. Tighten the knobs until they are snug.

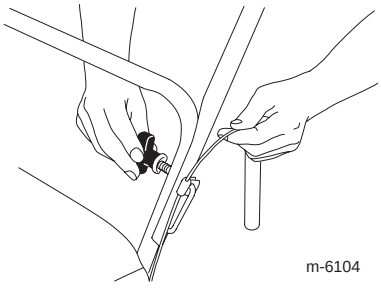

7. Adjust the control cable. Refer to Adjusting the Control Cable on page 9.

Installing the Discharge Chute

Install the discharge chute as shown.

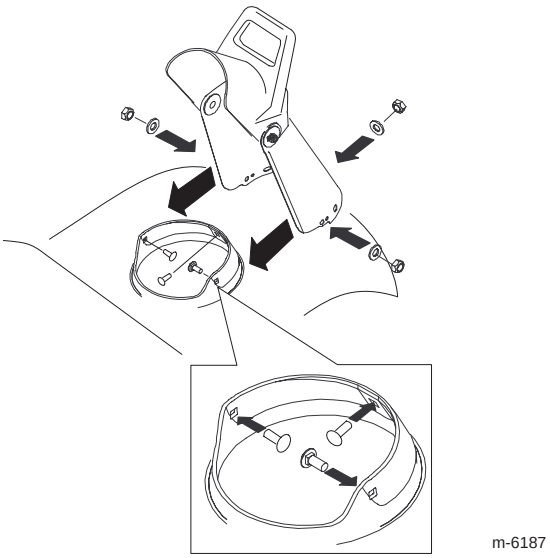

m-6187

Installing the Chute Crank

1. Insert the end of the chute crank (A) through the hole in the shroud (B) and align the mounting bracket (C) with the holes in the lower handle.

2. Slowly rotate the crank until the end of the chute crank fits into the hidden gear opening and the discharge chute turns with the crank.

Note: Ensure that the plastic bushing (D) is fully inserted into the hole in the mounting bracket.

3. Secure the mounting bracket to the handle with 2 bolts and 2 locknuts.

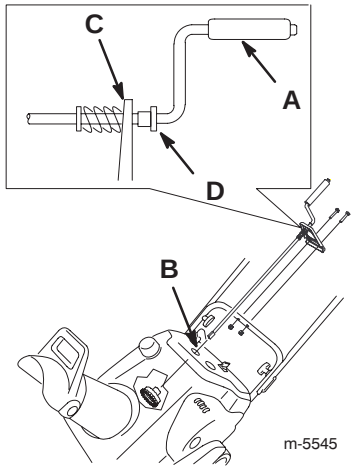

m-5545

Before Starting

Danger

Gasoline is extremely flammable and explosive. A fire or explosion from gasoline can burn you and others.

- **To prevent a static charge from igniting the gasoline, place the container and/or snowthrower on the ground before filling, not in a vehicle or on an object.**
- **Fill the tank outdoors when the engine is cold. Wipe up spills.**
- **Do not handle gasoline when smoking or around an open flame or sparks.**
- **Store gasoline in an approved fuel container, out of the reach of children.**

Mixing Gasoline and Oil

This snowthrower uses a 50:1 gasoline-to-oil mixture. Use **Toro 50:1 2-Cycle Oil (Fuel Stabilizer Added)** or an equivalent high-grade, NMMA TCW-certified two-cycle oil.

Important: To prevent engine damage, **do not** use automotive oil (such as SAE 30 or 10W30) or fuel mixed at the wrong gasoline-to-oil ratio.

1. Pour a half gallon (1.9 liters) of fresh, unleaded gasoline into an approved fuel container.

2. Add two-cycle oil to the gasoline according to the chart below:

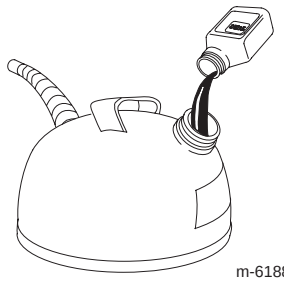

m-6188

50:1 Gasoline-to-Oil Ratio Mixing Chart	
Gasoline	Oil
1 gallon (4 liters)	2.6 ounces (80 ml)
2 gallons (8 liters)	5.2 ounces (160 ml)

3. Install the cap on the fuel container.

4. Shake the container to mix the gasoline and oil thoroughly.

5. Slowly remove the cap and add the remaining amount of gasoline.

Note: Do not mix gasoline and oil in the fuel tank. Oil at room temperature mixes easier and more thoroughly than cold oil. Oil below 32°F (0°C) requires additional mixing.

Filling the Fuel Tank

Fill the fuel tank with a fresh mixture of gasoline and oil mixed at the proper ratio.

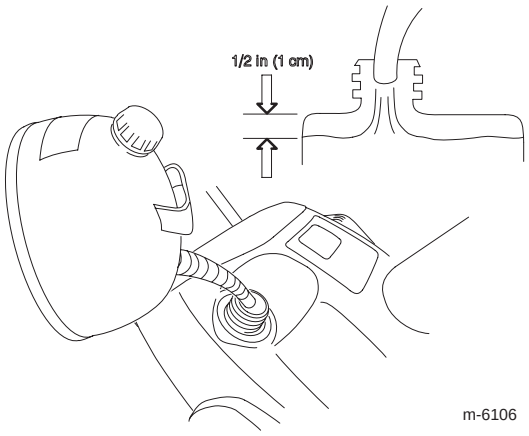

m-6106

Operation

Note: Determine the left and right sides of the machine from the normal operating position.

Starting the Engine

1. Turn the ignition key clockwise to the **On** position.

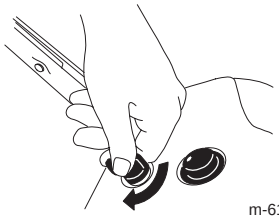
m-6189

2. Move the choke lever to the right.

3. Firmly push in the primer 2 times with your thumb, holding the primer in for a second before releasing it each time.

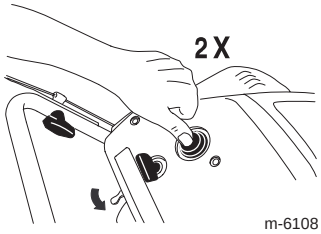

m-6108

4. Pull the recoil starter.

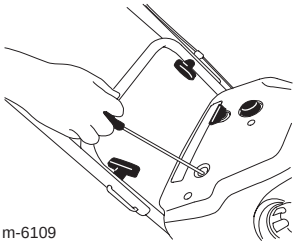
m-6109

5. With the engine running, move the choke lever to the left slowly.

Stopping the Engine

To stop the engine, turn the ignition key counterclockwise to the **Off** position.

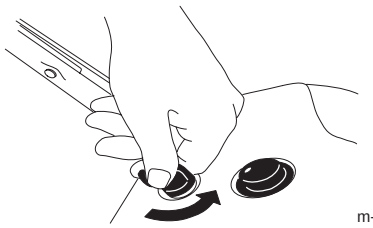
m-6192

Starting the Rotor Blades

To start the rotor blades, hold the control bar against the handle.

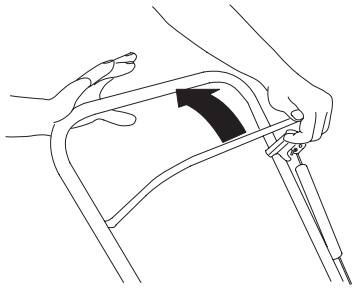

Stopping the Rotor Blades

To stop the rotor blades, release the control bar.

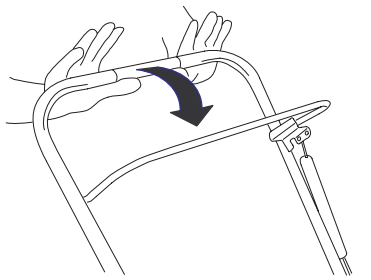

Adjusting the Discharge Chute

To adjust the discharge chute, rotate the chute crank (A) and move the chute deflector handle (B) as shown.

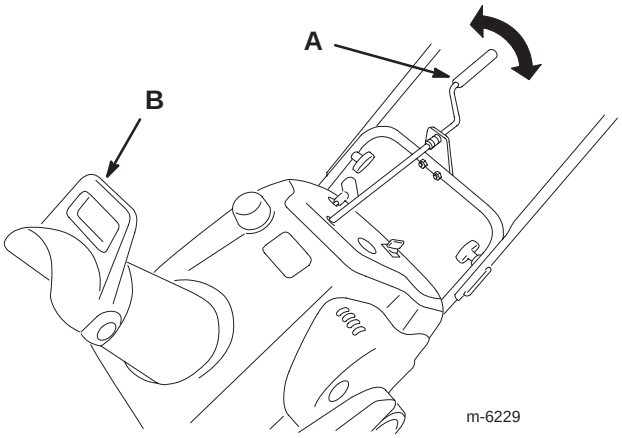

Throwing Snow

Warning

The rotor blades can throw stones, toys and other foreign objects and cause serious personal injury to the operator or to bystanders.

- **Keep the area to be cleared free of all objects that the rotor blades could pick up and throw.**
- **Keep all children and pets away from the area of operation.**

Operating Tips

- Remove the snow as soon as possible after it falls.
- To self-propel, raise the handle and tilt the snowthrower **slightly** forward, lifting the wheels off the ground. The more you tilt the handle forward, the faster the snowthrower self-propels.
- If the snowthrower does not propel itself forward on slippery surfaces or in heavy snow, push forward on the handle, but allow the snowthrower to work at its own pace.
- Overlap each swath to ensure complete snow removal.
- Discharge the snow downwind whenever possible.
- In snowy and cold conditions, some controls and moving parts may freeze. **Do not use excessive force when trying to operate frozen controls.** If you have difficulty operating any control or part, start the engine and let it run for a few minutes.

Preventing Freeze-up after Use

- Let the engine run for a few minutes to prevent moving parts from freezing. Stop the engine, wait for all moving parts to stop, and remove ice and snow from the snowthrower.
- With the engine off, pull the recoil starter handle several times to prevent the recoil starter from freezing up.

Maintenance

Note: Determine the left and right sides of the machine from the normal operating position.

Recommended Maintenance Schedule

Maintenance Service Interval	Maintenance Procedure
Initially	• Check the control cable both initially and after the first hour of operation; adjust it if necessary. • Check for loose fasteners and tighten them if necessary.
Annually	• Check the control cable and adjust it if necessary. • Inspect the rotor blades and have an Authorized Service Dealer replace the rotor blades and the scraper if necessary. • Have an Authorized Service Dealer inspect the spark plug and replace it if necessary. • Have an Authorized Service Dealer inspect the drive belt and replace it if necessary. • Store the snowthrower properly. • Check for loose fasteners and tighten them if necessary.

Adjusting the Control Cable

Check the control cable for proper adjustment initially, after the first operating hour, and then annually thereafter.

Checking the Cable

1. Move the control bar back toward the handle to remove the slack in the cable.

2. Ensure that a 1/16 to 1/8 in. (2 to 3 mm) gap (A) exists between the control bar and the handle. To adjust the cable, refer to Adjusting the Cable below.

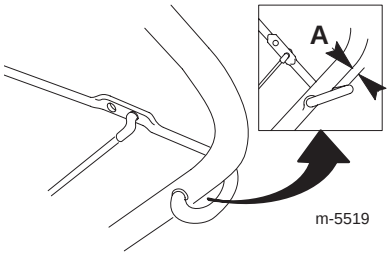

Important: The control cable must contain slack when you disengage the control bar for the rotor blades to stop properly.

Adjusting the Cable

1. Unhook the end of the control cable from the control bar.

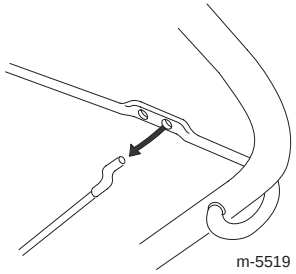

2. Move the Z-fitting (A) to a higher or lower hole as needed to obtain a 1/16 to 1/8 in. (2 to 3 mm) gap between the control bar and the handle.

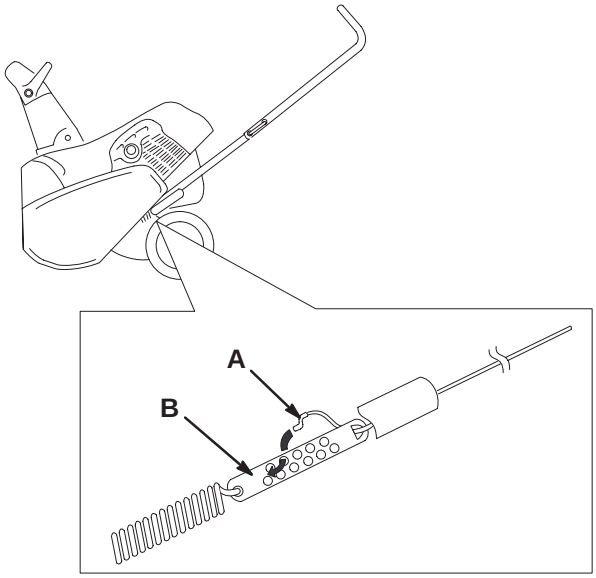

Note: Moving the Z-fitting higher decreases the gap between the control bar and the handle; moving it lower increases the gap.

3. Replace the spring cover and hook the end of the control cable into the bottom hole of the control bar.

4. Check the adjustment (refer to Checking the Cable on page 9).

Note: After extended use, the drive belt may wear and lose its proper belt tension. If the drive belt slips (continuously squeals) under a heavy load, increase the belt tension by inserting the spring end into the top hole of the control bar. The belt may slip (squeal) in wet conditions; to dry out the drive system, start the rotor and run it without a load for 30 seconds.

Inspecting the Rotor Blades

Before each season, inspect the rotor blades for wear. When a rotor blade edge has worn down to the wear indicator hole (A), have an Authorized Service Dealer replace the rotor blades and the scraper.

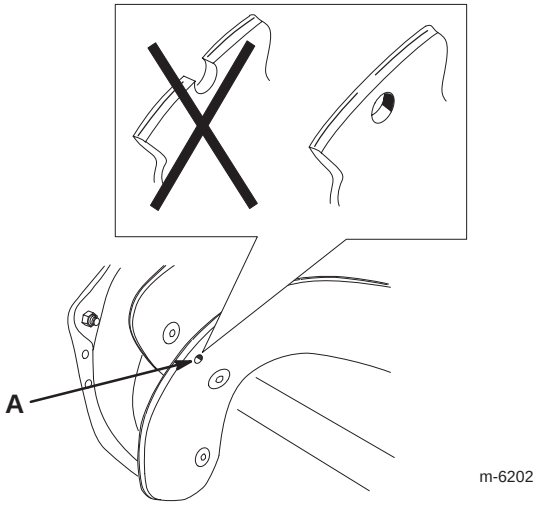

m-6202

Storage

Important: Store the snowthrower in its operating position and on its wheels. Storing the snowthrower on its front housing may cause hard starting.

Preparing the Snowthrower for Storage

Warning

Gasoline fumes are highly flammable, explosive, and dangerous if inhaled. If you store the product in an area with an open flame, the gasoline fumes may ignite and cause an explosion.

Do not store the snowthrower in a house (living area), basement, or any other area where ignition sources may be present, such as hot water and space heaters, clothes dryers, furnaces, and other like appliances.

Important: Do not use the chute handle to lift the snowthrower. This can damage the chute handle.

1. Add a fuel stabilizer/conditioner to the fuel in the fuel tank as directed.

Note: If you use **Toro 50:1 2-Cycle Oil (Fuel Stabilizer Added)**, you do not need to add a fuel stabilizer/conditioner.

2. Run the engine for 5 minutes to distribute the conditioned fuel through the fuel system.

3. Stop the engine and allow it to cool.

4. Use a hand pump to pump the fuel from the fuel tank into an approved fuel container, or run the engine until it stops.

5. Start the engine and run it until it stops.

6. Choke or prime the engine, start it a third time, and run the engine until it will not start.

7. Slowly pull the recoil starter until you feel resistance due to compression pressure, then stop.

8. Release the starter tension gradually by allowing the rope to go back slowly to prevent the engine from reversing due to compression pressure.

9. Dispose of unused fuel properly. Recycle it according to local codes, or use it in your automobile.

Note: Do not store stabilized fuel for more than 90 days.

10. Tighten all loose screws, bolts, and locknuts. Repair or replace any damaged parts.

11. Clean the snowthrower thoroughly.

12. Cover the snowthrower and store it in a clean, dry place out of the reach of children. Allow the engine to cool before storing it in any enclosure.

Folding the Handle

1. Loosen the knobs and pull out the handle bolts.

2. Fold the upper handle forward as shown.

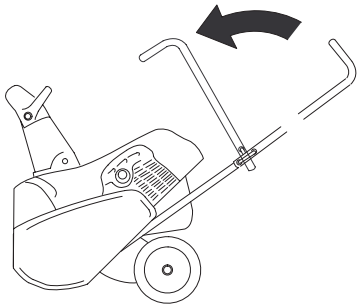

m-5537

Federal Emission Control Warranty Statement

A Two-Year Limited Warranty

Your Warranty Rights and Obligations

The U.S. Environmental Protection Agency (EPA), Toro, and Toro Warranty Company are pleased to explain the emission control system warranty on your 1997 and later utility/lawn/garden equipment engine. 1997 and later model year utility/lawn/garden equipment engines must be designed, built and equipped, at the time of sale, to meet the U.S. EPA regulations for small non-road engines. The equipment engine must be free from defects in materials and workmanship, which cause it to fail to conform with U.S. EPA standards, for the first two years of engine use from the date of sale to the ultimate purchaser. Toro and Toro Warranty Company warrant the emission control system on your utility/lawn/garden equipment engine for the period of time listed above, provided there has been no abuse, neglect, or improper maintenance of your utility/lawn/garden equipment engine.

Your emission control system may include parts such as the carburetor or fuel injection system, the ignition system, and catalytic converter. Also included may be hoses, belts, connectors, and other emission related assemblies.

Where a warrantable condition exists, Toro and Toro Warranty Company promise to repair your engine at no cost to you, including diagnosis, parts, and labor.

Manufacturer's Warranty Coverage

Toro and its affiliate, Toro Warranty Company, pursuant to an agreement between them, jointly warrant the 1997 and later utility/lawn/garden equipment engines for two years from the date of delivery. If any emission-related part on your engine is defective in materials or workmanship, we will repair or replace the part, free of charge.

Owner Responsibilities

As the engine owner, you are responsible for the performance of the required maintenance listed in your operator's manual. We recommend that you retain all receipts covering maintenance on your equipment, but we cannot deny warranty solely for the lack of receipts or for your failure to ensure the performance of all scheduled maintenance.

Any replacement part or service that is equivalent in performance and durability may be used in non-warranty maintenance or repairs, and shall not reduce our warranty obligation.

As the engine owner, you should be aware that we may deny you warranty coverage if your engine or a part has failed due to abuse, neglect, improper maintenance, or unapproved modifications or parts.

You are responsible for presenting your equipment engine to an Authorized Service Dealer as soon as a problem exists. The warranty repairs should be completed in a reasonable amount of time, not to exceed thirty (30) days.

If you have any questions regarding your warranty rights and responsibilities, contact us at:

Customer Care Department, Consumer Division
Toro Warranty Company
8111 Lyndale Avenue South
Bloomington, MN 55420-1196
800-348-2424 (U.S. customers)
877-484-9255 (Canada customers)

Warranted Parts

The warranty period begins on the date the engine or equipment is delivered to a retail purchaser. Toro and Toro Warranty Company jointly warrant to the initial owner and each subsequent purchaser that the engine is free from defects in materials and workmanship, which cause the engine to fail to conform with applicable regulations, for a period of two years.

Failures caused by abuse, neglect, or improper maintenance are not covered. The use of add-on or modified parts can be grounds for disallowing a warranty claim. We are not liable to cover failures of warranted parts caused by the use of add-on or modified parts. We are liable for damages to other engine components caused by the failure of a warranted part still under warranty. The owner is responsible for the performance of the required maintenance, as defined in the operator's manual.

Any warranted part which is not scheduled for replacement as required maintenance, or which is scheduled only for regular inspection to the effect of "repair or replace as necessary" shall be warranted for the warranty period. Any warranted part which is scheduled for replacement as required maintenance shall be warranted for the period of time up to the first scheduled replacement point for that part. Coverage under this warranty extends only to the parts listed below (the emissions system parts) to the extent that these parts were present on the engine when purchased.

- Fuel Metering System
  - Cold start enrichment system including the choke mechanism or priming system
  - Fuel pump
  - Air fuel ratio feedback system
  - Carburetor and internal parts
  - Fuel injection system
- Air Induction System
  - Air cleaner
  - Reed intake system
  - Intake manifold
  - Controlled hot air intake system
- Ignition System
  - Spark plug(s)
  - Ignition coils and electronics
  - Advance/retard mechanisms
- Catalytic Converter/Thermal Reactor System
  - Catalytic converter
  - Thermal reactor
  - Exhaust manifold
- Air Injection System
  - Air injection system or pulse valve
  - Valves affecting distribution of air
- Exhaust Gas Recirculation (EGR) System
  - EGR valve body and piping system connecting to the intake side of the engine
  - EGR control system
- Particulate Controls
  - Traps, filters, precipitators, and any other device used to capture particulate emissions
- Miscellaneous Items Used in the Above Systems
  - Vacuum, temperature, and time-sensitive valves and switches
  - Electronic controls
  - Hoses, connectors, and assemblies of same

Instructions for Obtaining Warranty Service

If you think that your Toro Product contains a defect in materials or workmanship, follow this procedure:

1. Contact any Toro Authorized or Master Service Dealer to arrange service at their dealership. To locate a dealer convenient to you, refer to the Yellow Pages of your telephone directory (look under "Lawn Mowers") or access our website at www.Toro.com. U.S. Customers may also call 800-421-9684 to use our 24-hour Toro dealer locator system.

2. Bring the product and your proof of purchase (sales receipt) to the Service Dealer.

The owner shall not be charged for diagnostic labor which leads to the determination that a warranted part is defective, if the diagnostic work is performed at a warranty station.

General Conditions

Neither The Toro Company nor Toro Warranty Company is liable for indirect, incidental or consequential damages in connection with the use of the Toro Products covered by this warranty, except for damages to other engine components caused by the failure of a warranted part still under warranty.

All implied warranties of merchantability (that the product is fit for ordinary use) and fitness for use (that the product is fit for a particular purpose) are limited to the duration of the express warranty.

Some states do not allow exclusions of incidental or consequential damages, or limitations on how long an implied warranty lasts, so the above exclusions and limitations may not apply to you.

This warranty gives you specific legal rights, and you may also have other rights which vary from state to state.

Part No. 374-0023 Rev. C

The Toro Starting Guarantee on GTS-5 (Guaranteed to Start) Engines and The Toro Total Coverage Guarantee

R Tek® Powered
Single-stage
Snow Products

A Warranty (Limited Warranty for Commercial Use)

Conditions and Products Covered under The Toro Starting Guarantee

The Toro Company and its affiliate, Toro Warranty Company, guarantee that your Toro GTS-5 Engine, when used for residential purposes*, will start on the first or second pull for five years from the date of purchase, if you provide the routine maintenance it requires, or we will fix it free of charge.

This warranty covers the cost of parts and labor, but you must pay transportation costs. This warranty applies to all R Tek-powered, single-stage Toro Snowthrowers.

Conditions and Products Covered under The Toro Total Coverage Guarantee

The Toro Company and its affiliate, Toro Warranty Company, promise to repair any Toro Product used for residential purposes* if defective in materials or workmanship or if it stops functioning due to the failure of a component for a period of two years from the date of purchase.

This warranty covers the cost of parts and labor, but you must pay transportation costs. This warranty applies to all R Tek-powered, single-stage Toro Snowthrowers.

Limited Warranty for Commercial Use

Gas-powered Toro Snowthrowers used for commercial, institutional, or rental use are warranted for 45 days against defects in materials or workmanship. Components failing due to normal wear are not covered by this warranty. The Toro Starting Guarantee does not apply when the product is used commercially.

Items and Conditions Not Covered

There is no other express warranty. This express warranty does not cover the following:

- Cost of regular maintenance service or parts, such as filters, fuel, lubricants, oil changes, spark plugs, cable/linkage adjustments, or brake and clutch adjustments
- Any product or part which has been altered or misused or required replacement or repair due to accidents or lack of proper maintenance
- Repairs necessary due to electrical supply irregularities or failure to properly prepare the snowthrower prior to any period of non-use over three months
- Pickup and delivery charges
- Operational misuse, neglect, or accidents
- Repairs or attempted repairs by anyone other than a Toro Service outlet
- Repairs or adjustments to correct starting difficulties due to the following:
  - failure to follow proper maintenance procedures
  - snowthrower auger/paddles striking an object
  - contaminants in the fuel system
  - improper fuel or fuel/oil mixture (consult your Operator's Manual if in doubt)
  - failure to drain the fuel system prior to any period of non-use over three months
- Special operational conditions where starting may require more than two pulls:
  - first time starts after extended period of non-use over three months or seasonal storage
  - improper starting procedures

If you are having difficulty starting your unit, please check the Operator's Manual to ensure that you are using the correct starting procedures. This can save an unnecessary visit to a Service Dealer.

Owner Responsibilities

You must maintain your Toro Product by following the maintenance procedures described in the Operator's Manual. Such routine maintenance, whether performed by a dealer or by you, is at your expense.

Instructions for Obtaining Warranty Service

If you think that your Toro Product contains a defect in materials or workmanship, or if a normal, able-bodied adult can no longer start your product's engine in one or two pulls, follow this procedure:

1. Contact any Toro Authorized or Master Service Dealer to arrange service at their dealership. To locate a dealer convenient to you, refer to the Yellow Pages of your telephone directory (look under "Lawn Mowers") or access our website at www.Toro.com. U.S. Customers may also call 800-248-8676 to use our 24-hour Toro dealer locator system.
2. Bring the product and your proof of purchase (sales receipt) to the Service Dealer.
3. If for any reason you are dissatisfied with the Service Dealer's analysis or with the assistance provided, contact us at: Customer Care Department, Consumer Division, Toro Warranty Company, 8111 Lyndale Avenue South, Bloomington, MN 55420-1196; or call us toll free at 866-336-5205 (U.S. customers) or 800-544-5364 (Canada customers).

General Conditions

All repairs covered by these warranties must be performed by an Authorized or Master Toro Service Dealer using Toro approved replacement parts. Repair by a Toro Service Dealer is your sole remedy under these warranties.

Neither The Toro Company nor Toro Warranty Company is liable for indirect, incidental, or consequential damages in connection with the use of the Toro Products covered by these warranties, including any cost or expense of providing substitute equipment or service during reasonable periods of malfunction or non-use pending completion of repairs under these warranties.

Some states do not allow exclusions of incidental or consequential damages, or limitations on how long an implied warranty lasts, so the above exclusions and limitations may not apply to you.

Countries Other than the United States or Canada

Customers who have purchased Toro products exported from the United States or Canada should contact their Toro Distributor (Dealer) to obtain guarantee policies for your country, province, or state. If for any reason you are dissatisfied with your Distributor's service or have difficulty obtaining guarantee information, contact the Toro importer. If all other remedies fail, you may contact us at Toro Warranty Company.

Part No. 374–0059 Rev. –

* Residential purposes means use of the product on the same lot as your home. Use at more than one location is considered commercial use, and the commercial use warranty would apply.