Form No. 3369-835 Rev C

TORO®

Count on it.

Parts Catalog

Three-Wheel Drive Kit without ROPS

Groundsmaster® 3250-D Traction Unit

Model No. 04477

Register at www.Toro.com.
Original Instructions (EN)

3369-835 C

Ordering Replacement Parts

To order replacement parts, please supply the part number, the quantity, and the description of each part desired.

Understanding Reference Numbers

Each identified part in an illustration has a reference number. The reference number for a part also appears in the parts list, along with other information about the part.

This catalog uses two special reference number formats, one to indicate parts in a service assembly and another to indicate the quantity of a given part in an illustration.

Service Assembly Reference Numbers

Parts in service assemblies have reference numbers in the form a:b. The a represents the reference number of the entire service assembly and the b represents a sequential number unique to each part within the service assembly.

For example, a wheel assembly might be identified by reference number 6, the tire by 6:1, the valve by 6:2, and the wheel by 6:3. When you order the assembly identified by reference number 6, you receive all parts identified by reference numbers 6:1,6:2, and 6:3. However, you may also order any part individually. Reference numbers of this type appear in illustration and in parts lists.

Reference Numbers Indicating Quantity

In an illustration, if a reference number indicates more than one part, the reference number has the form nX y. The n represents the quantity of the part, the X is the multiplication symbol, and the y represents the reference number.

For example, in an illustration, the reference number 2X 37 means that two of the parts identified by reference number 37 are indicated.

Contents

Wheel Motor Assembly 4
Motor and Hub Assembly 5
Hydraulic Motor Assembly No. 112-0225 6

© 2025—The Toro® Company
8111 Lyndale Avenue South
Bloomington, MN 55420

Contact us at www.Toro.com.
Printed in the USA.
All Rights Reserved

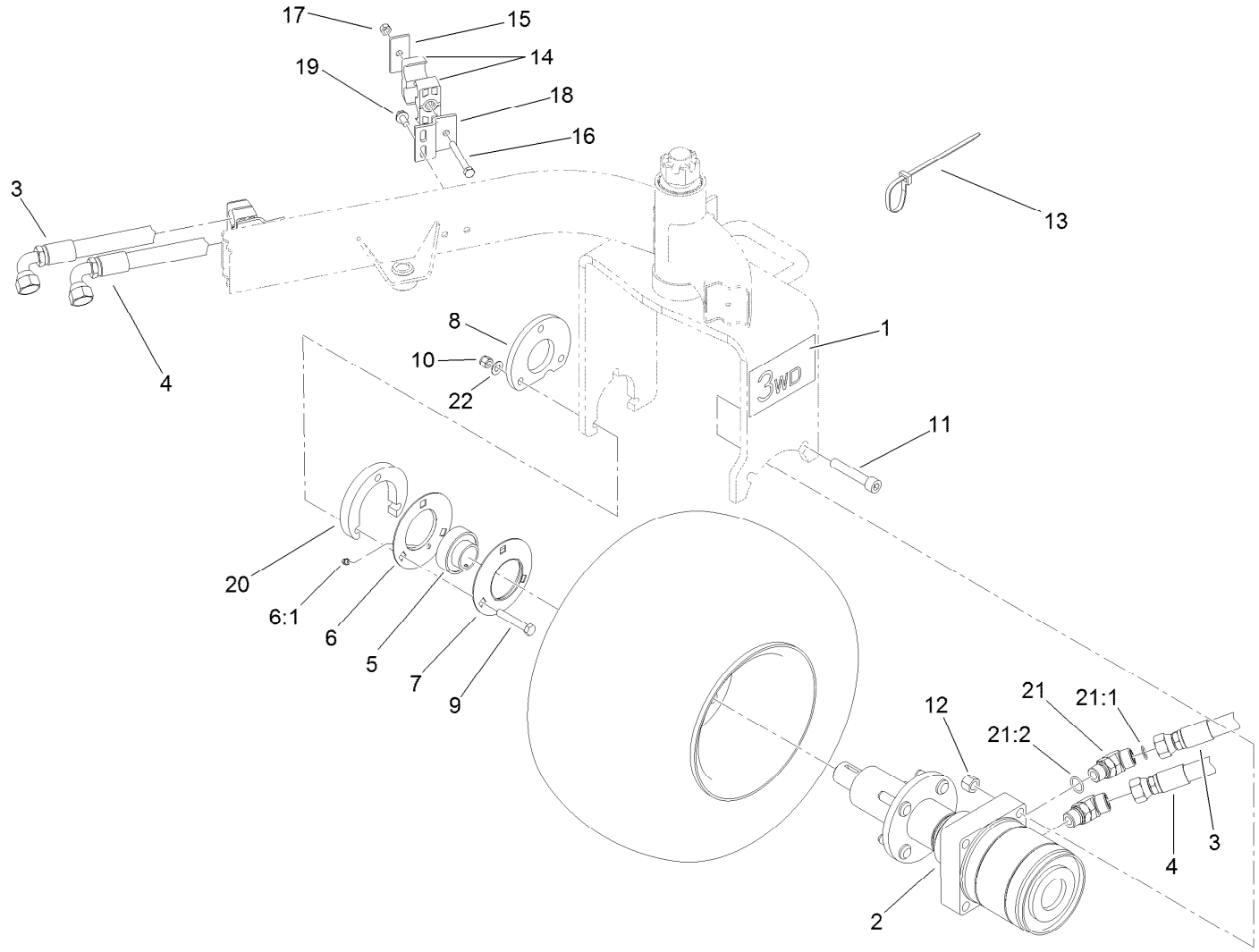

Wheel Motor Assembly

Ref.	Part Number	Qty.	Description
1	92-9752	2	Decal
2		1	Motor And Hub ASM ●
3	95-0517	1	Hose ASM
4	100-6412	1	Hose ASM
5	251-352	1	Bearing
6	85-8940	1	Flangette-Relube
6:1	302-5	1	Fitting-Grease
7	85-8950	1	Flangette-Standard
8	112-0219-01	1	Spacer-Mount, 3Wd
9	323-45	3	Screw-HH
10	112-0236	3	Nut-Lock
11	3274-93	2	Screw-HSH
12	3296-23	2	Nut-Lock, NI

Ref.	Part Number	Qty.	Description
13	3290-378	1	Tie-Cable
14	56-7974	4	Clamp-Tube
15	69-9761	2	Plate-Cover
16	33114-070	2	Screw-HH
17	33024-00	2	Nut-Lock, NI
18	95-0516	2	Bracket-Clamp
19	32144-14	4	Screw-HWHTF
20	99-1487-01	1	Plate-Bearing, Adapter
21	340-14	2	Fitting-HYD, 45 DEG
21:1	237-65	1	O-Ring
21:2	237-80	1	O-Ring
22	108-1438	3	Washer-Hardened

● Not serviced separately

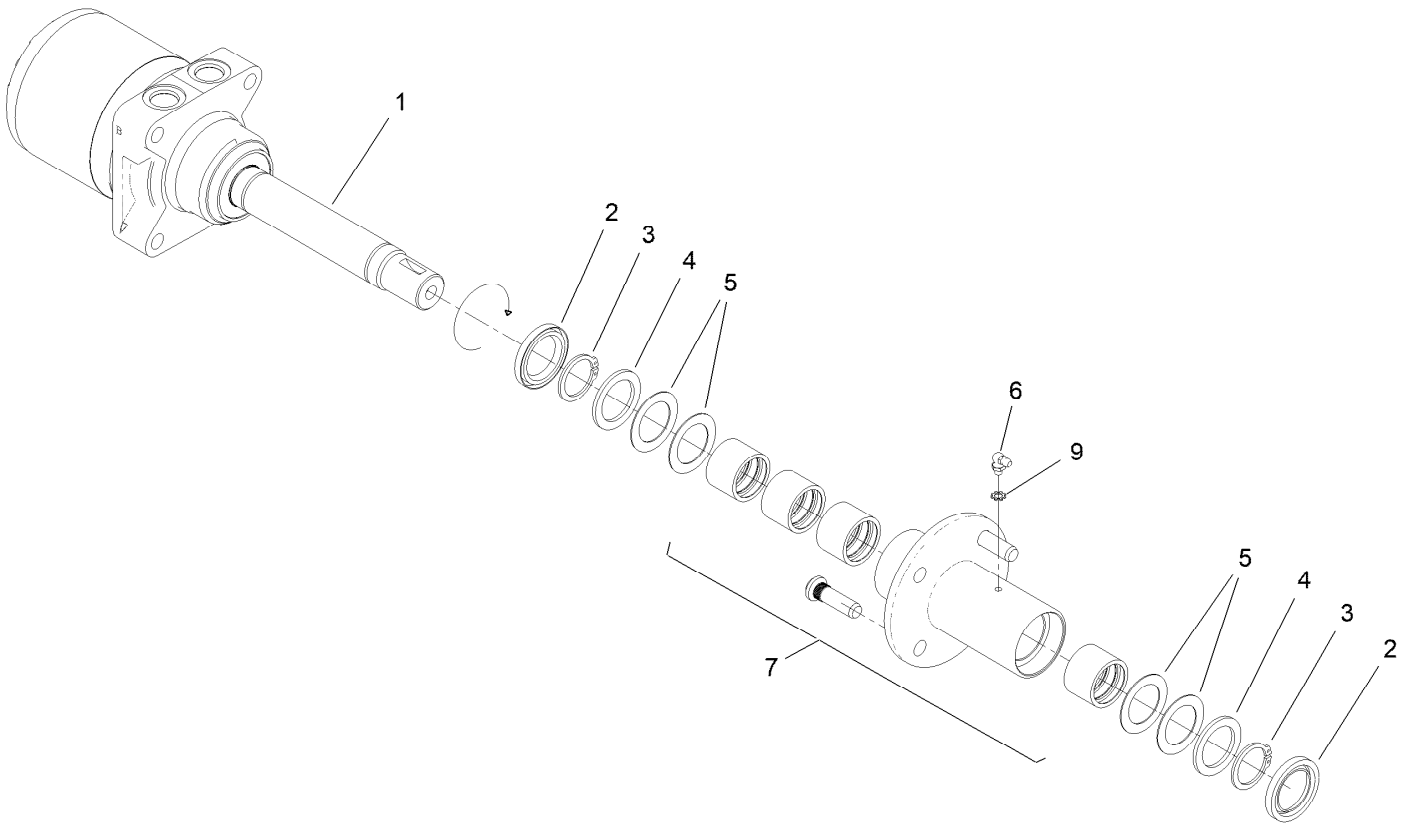

Motor and Hub Assembly

Ref.	*Part Number*	*Qty.*	*Description*
1	112-0225	1	Motor-Hydraulic
2	92-9165	2	Seal
3	32151-10	2	Ring-Retaining
4	92-9159	2	Washer
5	92-9166	4	Washer-Thrust
6	302-40	1	Fitting-Grease, 90 DEG
7	161-4696SP	1	Hub ASM-3Wd
9	3255-7	1	Washer-Lock/EXT

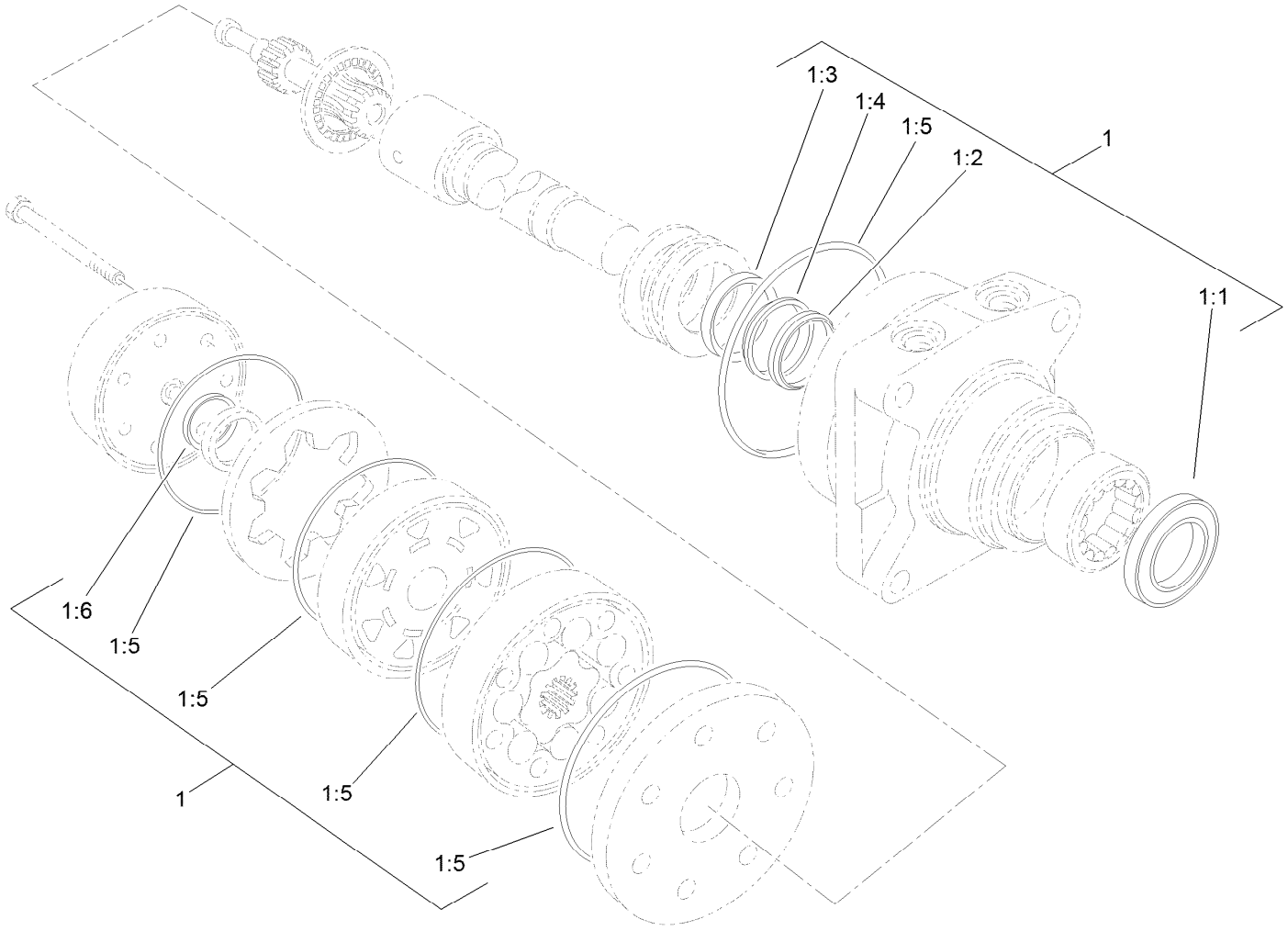

Hydraulic Motor Assembly No. 112-0225

Ref.	*Part Number*	*Qty.*	*Description*
1	76-0800	1	Seal Kit
1:1		1	Seal-Dirt And Water ●
1:2		1	Backup-Ring ●
1:3		1	Seal-Shaft ●
1:4		1	Washer-Back Up ●
1:5		5	Seal-Square, Ring (Inner) ●
1:6		1	Seal-Commutator ●

● Not serviced separately

Notes:



Count on it.