TORO

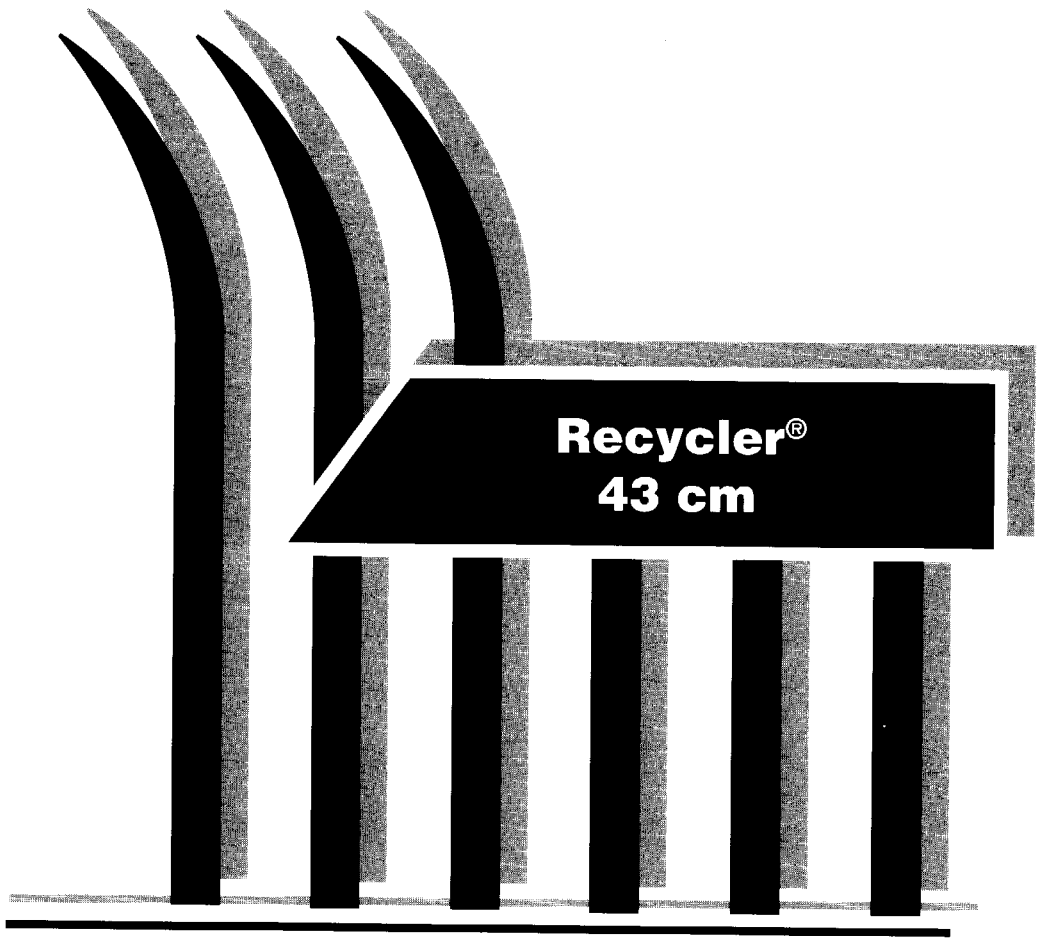

Model

43 cm **21012, 21013**

GB **Operator's Manual**

© 1998 by The Toro Company

General	3		Maintenance and Upkeep	15	
Safety	5		Spare Parts and Troubleshooting	20	
Assembly and Start-up	7		Hints on Tending the Lawn	23	
Operation	11				

© 1998 by TORO Company

TORO

1 General

1.1 Introduction

1.2 Regulation on Time Limits for the Operation of Lawn Mowers.

1.3 Technical Data

1.1 Introduction

The TORO lawn mower has been designed according to the latest technical and physiological aspects with due regard to the safety regulations in force.
With its special equipment the Recycler® -Mower can cut up grass and leaves several times. This superfine-cut material will be sprinkled into the lawn by the mower.
Read the instructions for use carefully and familiarize yourself with the instructions on safety, assembling, operation and maintenance.
The TORO lawn mower has been designed for the private use in the garden. Lawn mowers for the private garden are units which are - as a rule - in use for not more than 50 hours per year, and which are mainly used for the tending of patches of grass and lawns; they are, however, not to be used in public gardens, parks, sports fields etc. and not on roadsides nor in the agriculture and forestry.
The observance of the instructions for use enclosed by TORO is a prerequisite for the proper use of the lawn mower. The instructions for use also enclose the conditions of operation, maintenance and upkeep.

Safety



On-the-job safety symbol, this symbol you will find with all on-the-job safety instructions dealing with danger of personal injury. It is imperative to observe these instructions. The on-the-job safety instructions should be passed on to other users as well. The general regulations for safety and prevention of accidents must also be observed.



Warning sign, this symbol marks the points which are to be taken special notice of in order to avoid damaging or destroying the unit.

1.2 Regulation on Time Limits for the Operation of Lawn Mowers.

The regulations on the operation of lawn mowers vary from one region to another. The competent authority will be pleased to inform you on regulations and regional restrictions, especially as to the protection of the period of quiet after lunch or of very sensitive areas (e. g. nature reserves),

1.3 Technical Data

width of cut:	43 cm
motor type:	4-cycle -Motor B&S Quantum
output:	2,3 kW
motor speed:	3000 min^{-1}
handle bar a_{hw} :	15 m/sec^2 (measured in accordance with pr EN 1033)
tank volume:	1.1 liters
oil volume:	0.6 liters
weight:	21012 28 kg 21013 31 kg
dimensions :	L x W x H = 98 x 45 x 52 cm (folded up)

© 1998 by The Toro Company

TORO

GB **EC Declaration of Conformity to Directives**
89/392, 91/368, 93/44, 93/68, 89/336, 73/23 (EN60335)

GB **Certificate of Conformity**
Conforms to the Specifications of Directive 84/538/EEC

Manufacturer	**The Toro Company, 8111 Lyndale Ave.So., Bloomington, MN 55420-1196, USA**
Product Name	**Toro Recycler®**
Serial Number	**8900001 +**
Model Number	**21012** **21013**
Noise information	**L_{WA} = 96 db (A)**
Signature, Title, Date	VP Technical Manager Bloomington, MN, USA 01.11.1998 Jerry Patrin Jerry Patrin

© 1998 by The Toro Company

TORO

2 Safety

2.1 General Notes
2.2 Proper Use
2.3 Improper Use
2.4 Preparing the lawn mower for safe operation
2.5 Safe operation
2.6 Safe maintenance and storage
2.7 List of symbols

2.1 General notes

1. Read the instructions carefully. Familiarize yourself with the operating elements and the proper use of the unit.
2. Children as well as persons who are not familiar with the instructions for use must not operate the lawn Observe the local age limits for the operation of the unit.
3. Do not start the mower in close proximity to children and pets.
4. The operator is liable for injuries of third parties and damages of their property.

2.2 Proper use

The lawn mower serves exclusively for the tending of grass patches and lawns in the private garden. Any other use is regarded as inexpedient. The Toro Company is not liable for damages resulting from this.

2.3 Improper use

The mower must not be used for the trimming of bushes, hedges and shrubs, for the cutting of creepers or grass on roof gardens or in balcony boxes, for the cleaning (by suction, blowing away; snow removal) of sidewalks nor as a chaffcutter for chopping cut-off twigs and branches of trees and hedges. Moreover, the mower must not be used as drive unit for other interchangeable equipment items and tool kits.

2.4 Preparations for safe operation

1. You should always wear sturdy shoes and trousers when mowing. Do not mow barefoot or wearing sandals.
2. First inspect the area to be mowed. Remove all objects which can be hurled away by the mower.
3. Fuel is extremely inflammable.

- Store fuel in safe cans only.
- Always take the mower outdoors to fill the fuel tank and do not smoke while doing so.
- Fill in fuel only before starting the motor. While the motor is running resp. hot, you must not remove the cap of the tank or fill in fuel.
- If some fuel has overflown, the motor must not be started before the unit has been removed from the place where the fuel has been spilled. Do not take any risk, wait until the gasoline vapours have evaporated.
- Close all caps of fuel cans and tanks tightly.

4. Exchange damaged sound absorbers.
5. Make a visual inspection before starting the motor and check for damages and wear on cutter bar, fastening screws of cutter and cutting parts.
   Worn or damaged cutters and screws must always be exchanged in sets to keep the balance.

2.5 Safe operation

1. Do not let the motor run indoors.
   Danger of carbon-monoxide poisoning.
2. Mow only in daylight or with good illumination.
3. Do not mow grass when wet.
4. Make sure to have a firm foothold when mowing on sloping ground.
5. Mow at a walking pace, do not run.
6. Always mow sideways to the slope, never up and down.
7. Be careful when changing direction on sloping ground.
8. Do not mow on extremly sloping ground.
9. Be careful when moving the lawn mower backward or pulling it.
10. Stop the engine, if you have to tilt the lawn mower when walking off the grass to cross paths. Transport the machine to the area to be mowed and back with the motor off.
11. Never operate the lawn mower without safety devices e. g. impact protection and/or grass collecting elements.
12. The adjustments on the motor are preset and must not be changed. Do not overspeed the motor.
13. Loosen all clutches of cutters and drive before starting the motor.
14. On starting the motor, all instructions are to be observed, and attention is to be paid that the feet are in a safe distance to the cutters.
15. Do not tilt the lawn mower when starting the motor, unless the motor has to be tilted for this purpose. In this case, the unit must not be tilted more than absolutely necessary, to be more precise, the mower may only be tilted backward, so that the bottom side with the cutters is not turned towards the operator
16. Keep away from the grass ejection opening when starting the motor.
17. Never put your hands and feet on or under rotating parts. Keep a due distance to the ejection hole.
18. Do not lift or carry the lawn mower with the motor running.
19. In the following cases, the motor is to be stopped and the spark plug connector is to be disconnected:

- before removing chokings resp. obstructions in the ejection channel
- before inspecting, cleaning or performing any other work on the lawn mower;
- after the lawn mower has hit against a foreign matter. Check your lawn mower for damages and make the necessary repairs before further use of the lawn mower.
- if the unit starts to vibrate heavily (immediate inspection required).

20. Always stop the motor before leaving the mower and each time before refuelling.

© 1998 by The Toro Company

2.6 Safe maintenance and storage

1. Ensure that all nuts, bolts and screws are tightened to guarantee a safe operating state.
2. If there is fuel in the tank, never place the mower where there is danger that the gasoline vapours might catch fire from open flames or sparks.
3. Let the motor cool down before you put the mower into a closed room.
4. In order to avoid fire risk, keep the area of motor, exhaust, battery case and fuel tank free from grass, leaves or excessive amounts of grease/oil.
5. Check the grass collecting sack at short, regular intervals for wear and damages.
6. For safety reasons, worn or damaged parts are to be exchanged.
7. If the fuel tank has to be emptied, this has to be done outdoors.

2.7 List of symbols



Warning

Read the instructions for use before starting



Third parties have to be kept out of the hazardous area



Disconnect spark plug connector before servicing the cutting tool



high motor speed



low motor speed (idle)



cold start injection (starting aid)



push starting aid 3 times



pull starter rope



„Adjustment of cutting height“



electro start (motor on)



motor stop



clutch disengaged



clutch engaged



wheel



wheel drive

© 1998 by The Toro Company

TORO

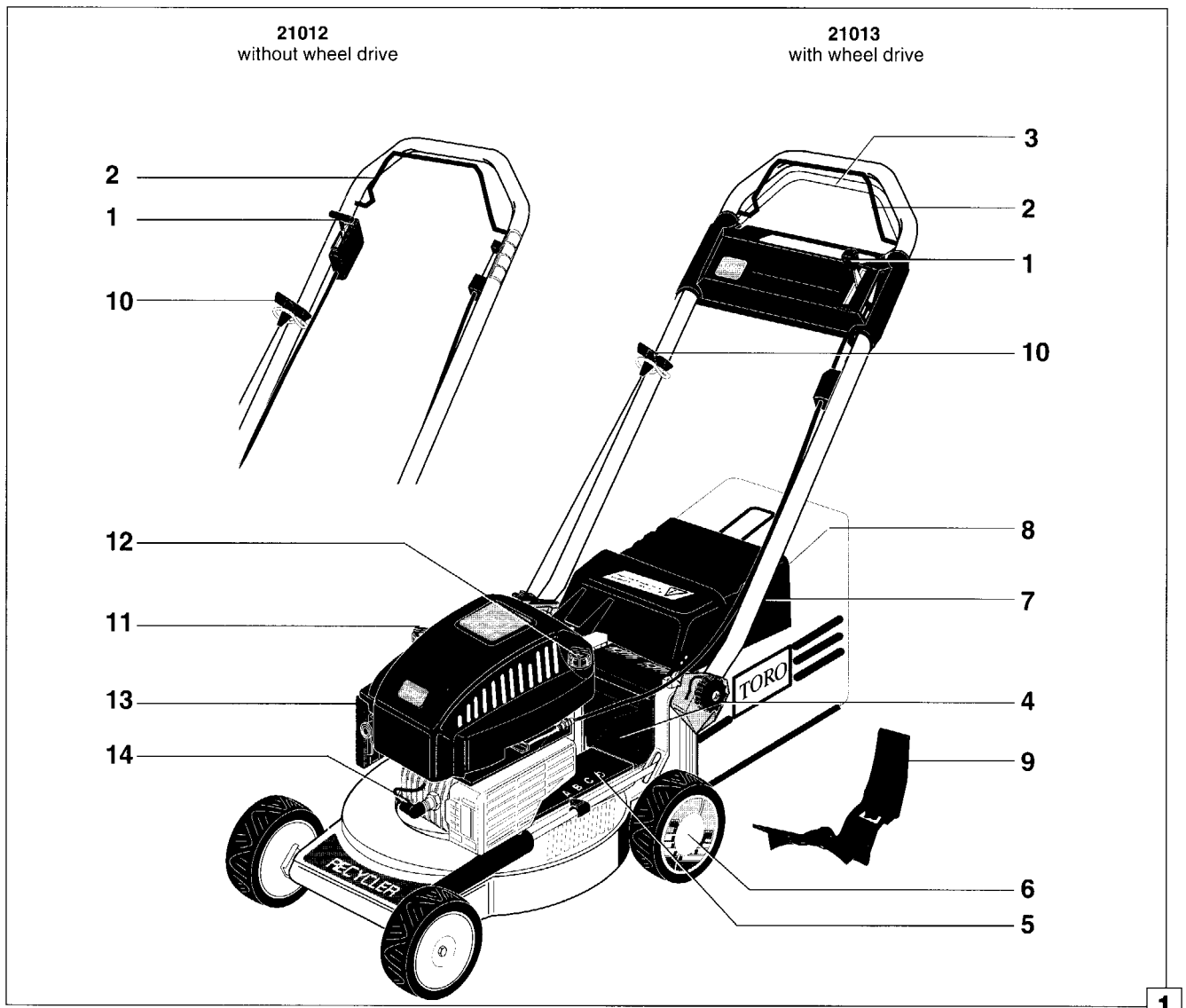

1

3 Assembly and start-up

3.1 Become acquainted with your lawn mower
3.2 Setting the lawn mower up
3.3 Mounting the handlebar
3.4 Attaching the grass collecting device
3.5 Adjusting the cutting height
3.6 Proper cutting height for recycling
3.7 Filling in the motor oil
3.8 Filling up the tank

3.1 Become acquainted with your lawn mower

1 **Motor operating lever**
The motor operating lever serves to regulate the motor.

2 **Safety lever for motor start/stop**
Function - refer to chapter start-up

3 **handle-type bow for wheel drive (only mowers with wheel drive)**
With this bow, the wheel drive is turned on and off.

4 **cutting height adjusting handle (6 steps)**

5 **Cutting height scale**
Scale indicating the adjusted cutting height

6 **„Smart Wheel" scale**
Scale for adjusting the proper cutting height

7 **Ejection door**
Guard for the ejection opening which must not be removed. It also serves as a stacker for the cut grass when mowing without collecting device.

8 **Grass-collecting device**

9 **Recycler - plug**
refer to chapter operation

10 **Handlebar start**

11 **Fuel tank**
Contents: approx. 1.1 liters, operating time: approx. 1 h / tank filling

12 **Oil filling pipe and oil measuring stick**
refer to chapter start-up

13 **Air filter**
Cleaning refer to chapter maintenance and upkeep

14 **Spark plug connector**
plug on spark plug before start-up

© 1998 by The Toro Company

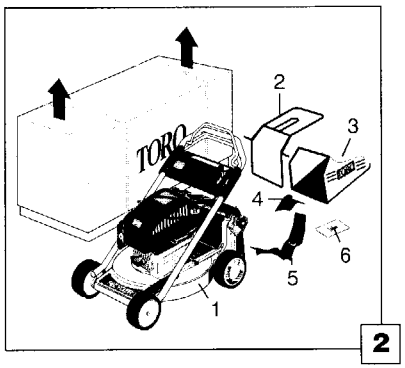

2

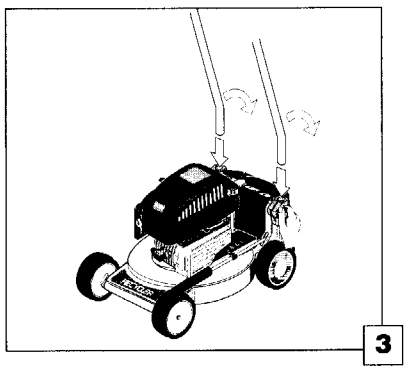
3

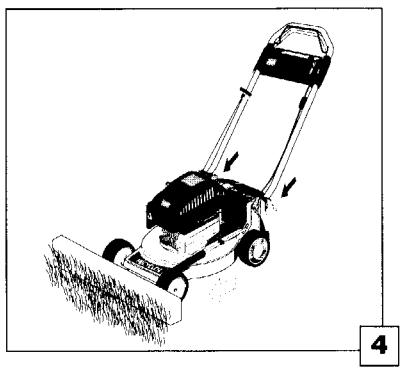
4

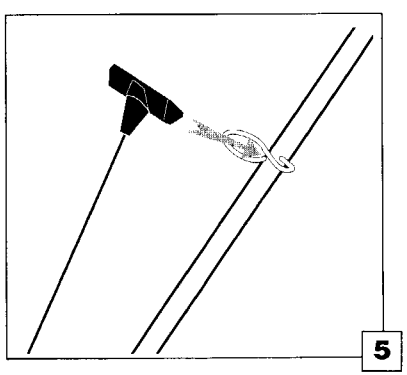
5

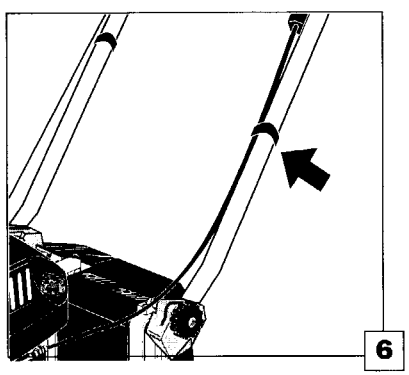
6

3.2 Setting the lawn mower up

1. Open the tapes and lift the upper part of the carton (Fig. 2).
2. Take out the components and put them down (Fig. 2).
3. Check completeness of contents.
   Contents: (1) mower with guide sleeper, (2) rack for grass collecting bag, (3) grass collecting bag, (4) grass guiding profile, (5) recycler plug, (6) user's manual (fig. 2).
4. Dispose packaging according to the local regulations.

3.3 Mounting the handlebar

1. Slacken tommy nuts tommy nuts at the lateral mower rear and turn sleeper receptacle, until openings point up (fig. 3).
2. Insert guide sleeper into receptacle up to the limit, cables must run outside along the guide sleeper.

do not bend, squeeze or damage cable.

3. swing guide sleeper back until receptacles snap into housing, then tighten tommy nuts by hand.

If you should not succeed in reassembling the guide sleeper as described above, insert sleeper only somewhat, swing back, tighten tommy nuts so that the receptacles snap into the housing. In this working position, push mower with the front wheels against an obstacle, push against sleeper, push in up to the limit stop, and tighten tommy nuts by hand (fig. 4).

4. Attach starter rope to the eye bolt at the guide sleeper (fig. 5).
5. Attach cable with velcro fasteners or cable binders to the guide sleeper (fig. 6).

© 1998 by The Toro Company

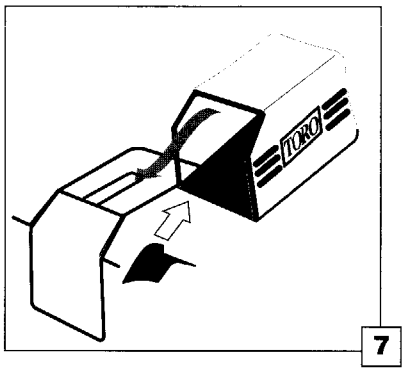

7

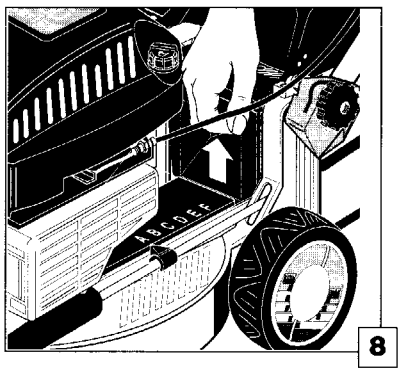

8

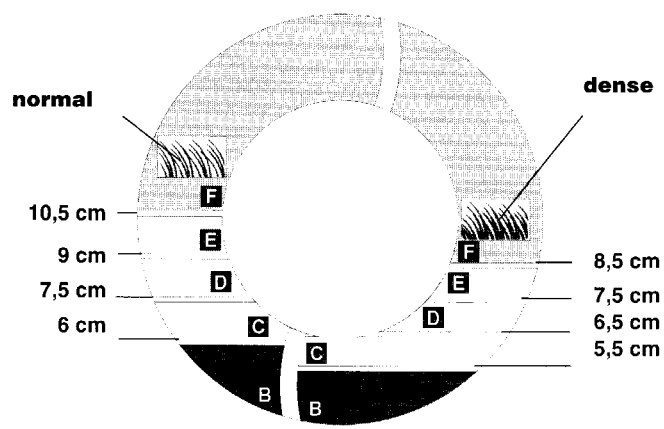

9

3.4 Attaching the grass-collecting device

1. Put the fabric of the collecting sack from behind onto the frame (Fig. 7).
   Slide the upper plastic profile underneath the handle to the front and clip it there.
2. clip the other plastic profiles around the frame.
3. clip the plastic profile (Fig. 10)

3.5 Adjusting the cutting height

Adjust cutting height only when the motor is turned off.

The cutting height is adjustable with a six-step central height adjustment.

1. Push adjusting handle up until it hits the limit stop.
2. Adjust the cutting height by means of the scale keeping the adjusting handle pressed and moving the mower up and down (Fig. 8).
3. Release adjusting handle. The mower is locked in the desired position.

3.6 Proper cutting height for recycling

The left rear wheel bears a scale (Smart Wheel) for reading the appropriate cutting height (Fig. 13).
Left scale = normal grass
Right scale = dense grass

Never use position "A" for recycling.

In easy and suitable conditions, position **"B"** is possibletouse, recommended for recycling is **"C"**, **"D"** or **"E".**

During the warm summer months, adjust cutting height according to the scale „normal".
For dense, thicker or damp grass e. g. in spring, use the scale „dense".

1. First push the mower onto the lawn - the scale must be parallel to the ground.
2. Now you can read the length of the uncut grass on the scale and choose the recommended adjustment.

© 1998 by The Toro Company

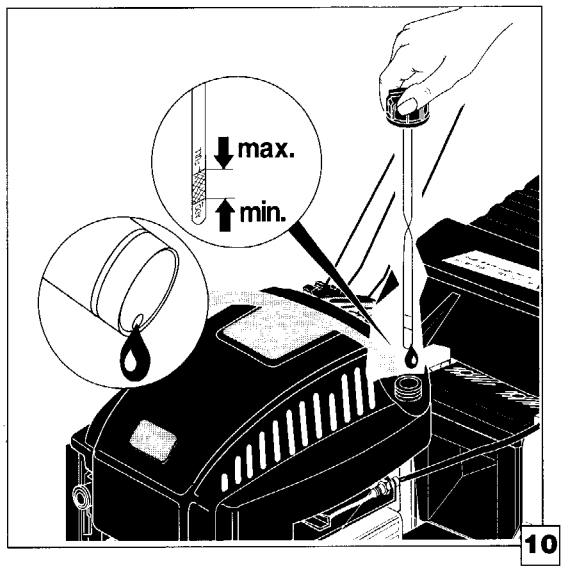

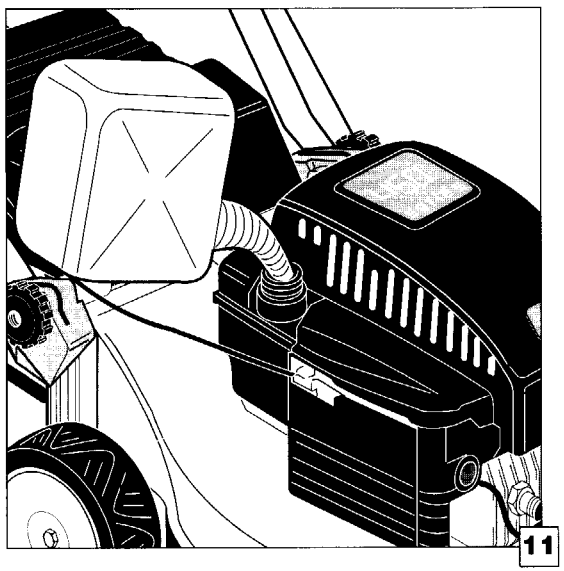

3.7 Refilling the motor oil (Fig. 10)

With outside temperatures above 4°C, use SAE 10 W-30 HD or 10 W-40 HD. With temperatures below 4°C, use SAE 5 W-20 or 5 W-30 HD.

1. Place mower on a horizontal surface.
2. Open cover and fill in approx. 0.6 liters of motor oil and insert oil measuring stick up to its limit stop (do not screw in).
3. Take out oil measuring stick and check oil level.

Oil level may not be above the "Full" mark and not below the "ADD" mark. If required, drain some of the oil.

4. Screw cover on oil filling pipe and tighten with manual force.

First oil exchange after 5 operating hours. After that, every 50 operating hours. Check the oil level before each start-up.

3.8 Filling up the tank (Fig. 11)

Fill in regular grade unleaded petrol only. Do not mix fuel with oil. Do not use any fuel that has been stored for a long period of time.

Only store reserve fuel in containers approved for this. To fill up the tank, turn off motor. Only open tank while motor is turned off. Only fill up the tank outdoors. Do not inhale fuel vapors.

Remove any overflown fuel before starting.

No smoking, no open fire, no open light.

After sufficient fuel has been filled in, close the tank cover with manual force and wipe off spilled fuel, if any.
Do not fill up fuel up to the filling pipe, but leave an "extension space" of approx. 1 cm.

© 1998 by The Toro Company

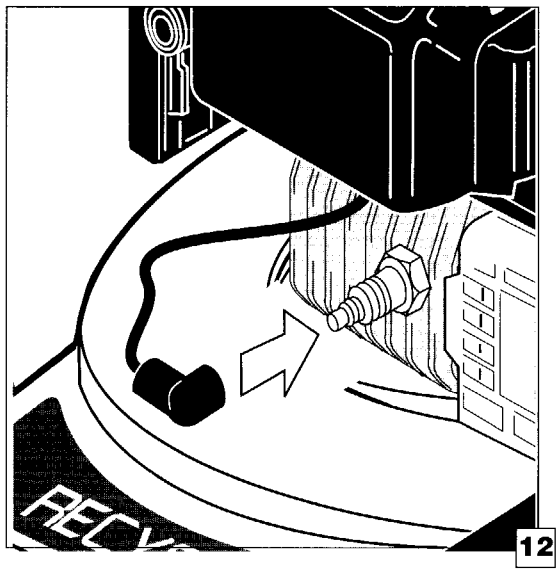

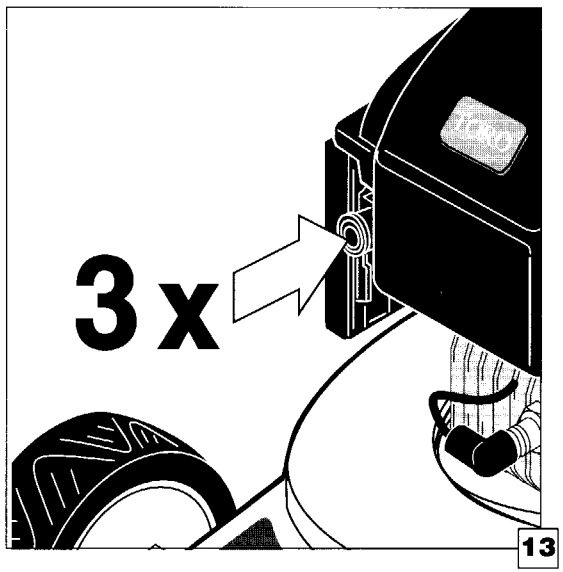

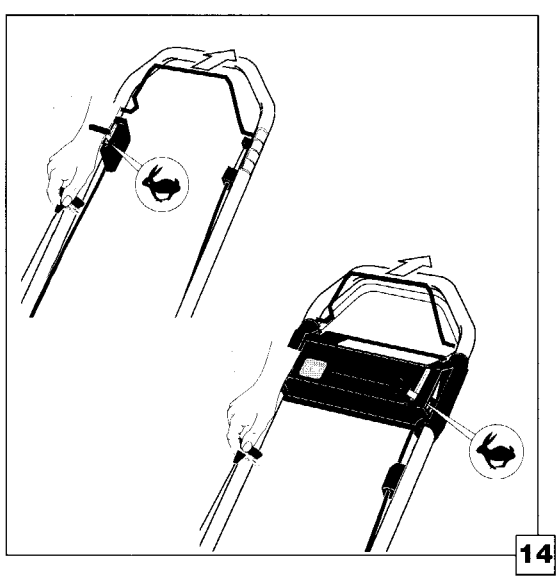

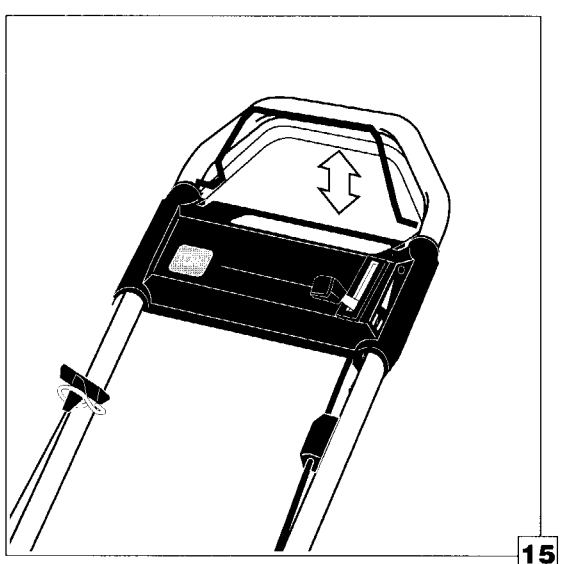

4 Operation

4.1 Starting and turning off the motor and operation of wheel drive (only for mowers with wheel drive)

4.2 Recycling

4.3 Mowing with grass-collecting device

4.4 Mowing without grass-collecting device

4.1 Starting and turning off the motor and operation of wheel drive (only for mowers with wheel drive)

Starting the motor

1. Plug spark plug connector on the spark plug (fig. 12), push motor operating lever forward into position „fast".
2. Place mower on a flat surface without high grass.
3. If the motor is cold, press the primer button three times (Fig.13). If the motor is warm start without pressing the primer button.
4. Pull up lever to the handlebar and pull up starter rope until resistance can be felt. Pull up starter rope evenly approx. 1 arm length until the motor starts (Fig. 14).

Do not pull starter rope up to the limit stop or let go abruptly, but let it slide back slowly to avoid damage to the rolling-up mechanism.

5. When motor is running, push motor operating lever into the desired position (fast - slow).

Operation of Wheel Drive

6. For mowers with wheel drive, pull up handle-type bow for wheel drive towards the handle-type sleeper in order to turn on wheel drive (fig. 15).

The mower may not be used to pull objects.
It is forbidden to ride on the mower.

The motor runs as long as the lever is pulled.

© 1998 by The Toro Company

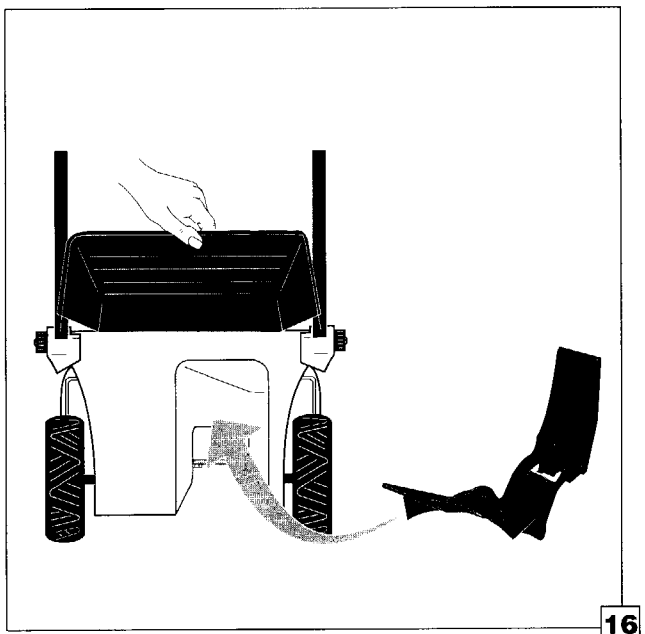

16

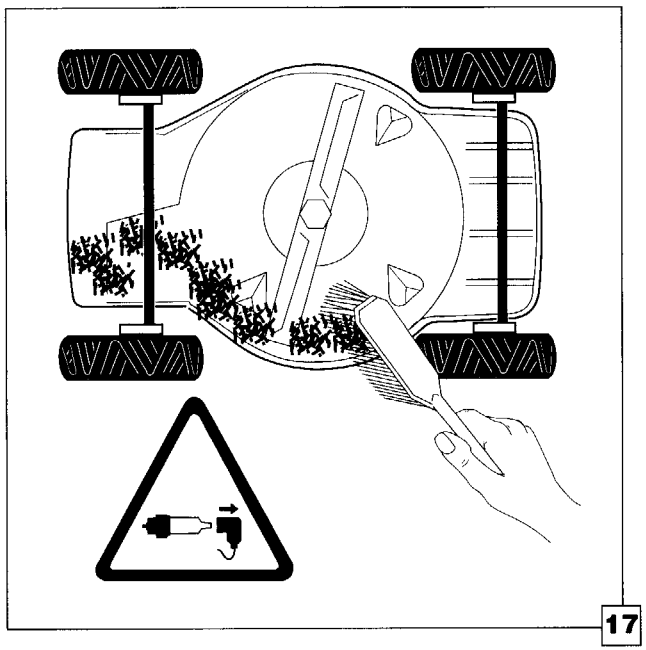

17

Turning the motor off

Release handle-type safety bow.
For mowers with wheel drive, release handle-type bow for wheel drive and handle-type safety bow.

The cutter will coast for a short time.
Do not touch underneath the mower.

Turn the mower off when driving off the lawn.
Wait until the cutters stand still and remove the spark plug connector before transporting or lifting the mower.

4.2 Recycling

For recycling the Recycler plug must be inside the ejection channel.

1. Ensure that the motor and the cutter stand still.
2. Open the ejection door.
3. Push the Recycler plug into the ejection channel. The Recycler plug must lock (Fig.16).
4. Close the ejection door.

To remove the Recycler plug, stop the motor and wait until the cutter stands still.

Open the ejection door and pull the Recycler plug out. Close the ejection door.

- Ensure that the cutter is always sharp. Notches may be removed by means of a file (mind the unbalance).
- After each mowing the grass rests must be removed from the bottom side of the mower, from the deflectors and from the Recycler plug (Fig. 17).
- With grass heights greater than or equal to 15 cm, the lawn should be mowed in two steps.
- In hot summers, adjust the cutting height on C, D, E or F. Do not cut off more than a third of the grass leaf.

© 1998 by The Toro Company

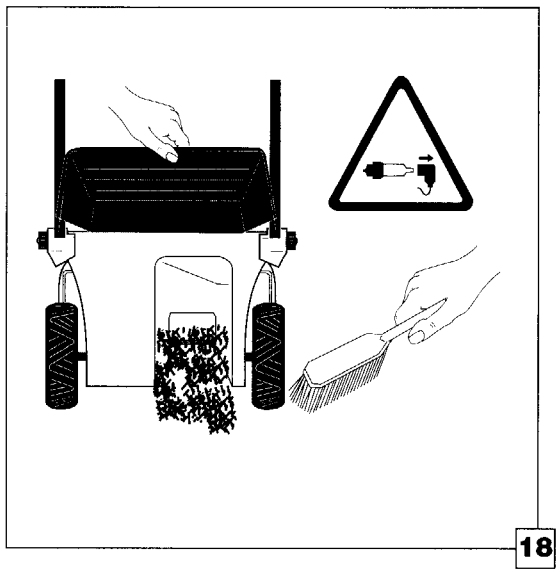

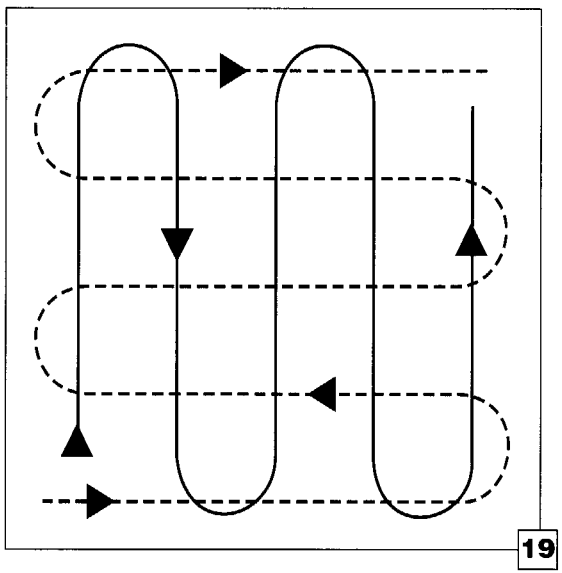

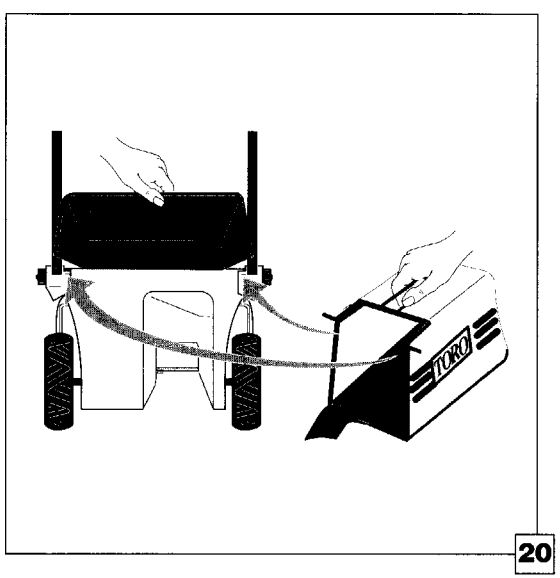

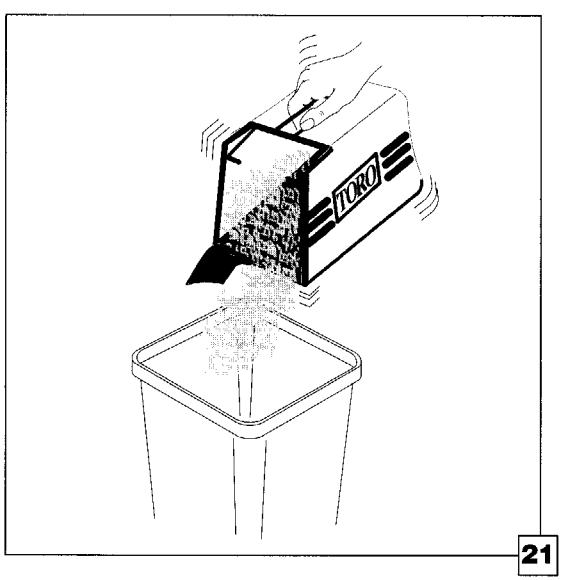

When mowing in high grass, you should select a higher cutting adjustment first. Then mow with the usual adjustment.
Lumpy grass and chockings inside the mowing channel effect a throttling or stop of the motor. In such cases, you should mow at least one step higher.
Should the motor have stopped due to the conditions inside the mower housing and block when restarting, it is absolutely necessary to clear the mowing tunnel from grass rests (Fig. 18).

To clean the mower, remove the spark plug connector.

Change the mowing direction frequently (Fig. 19).

In case of an unsatisfactory mowing result:

1. Resharpen the cutters (Ensure not to create an unbalance).
2. Mow at a slower pace.
3. Increase the cutting height by one or two steps.
4. Mow your lawn in shorter intervals.
5. Mow only 2/3 or half the mowing width, in order to give the mower the opportunity of self-cleaning.

4.3 Mowing with the grass-collecting device

Never remove the grass-collecting device while the motor is running - danger of injury!

1. **Ensure that the motor and the cutter stand still. Remove the Recycler-plug!**
2. Clean the grass ejection area from grass rests (Fig. 18).
3. Hang the grass-collecting device into the mounting on the mower housing (Fig. 20).
4. Close the ejection door up to the grass-collecting device.

To empty the grass-collecting device, turn the motor off and wait until the cutter stands still.
Disconnect the spark plug connector when leaving the mower.

Remove the grass-collecting device and tilt it a bit to the back so that no grass will fall out.

Dump the full grass-collecting device by shaking it slightly (Fig. 21).

© 1998 by The Toro Company

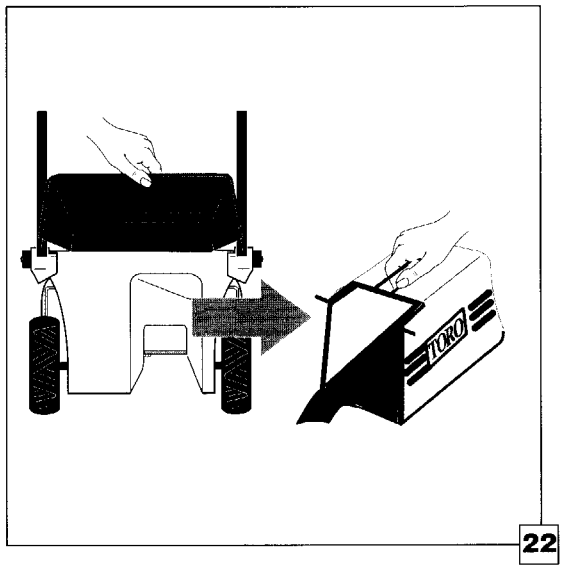

22

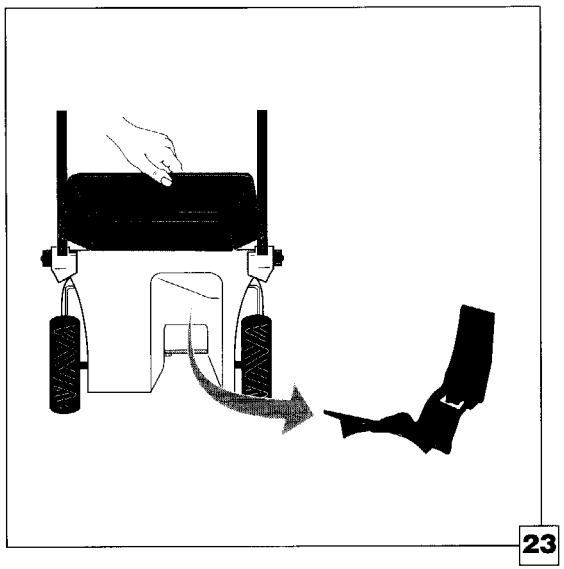
23

4.4 Mowing without the grass-collecting device

Never remove the grass-collecting device while the motor is running - danger of injury!

Mowing without the grass-collecting device is recommended for mowing high grass or if no grass collection is desired. Remove the grass-collecting device and the Recycler-plug (Fig. 22 + 23).

© 1998 by The Toro Company

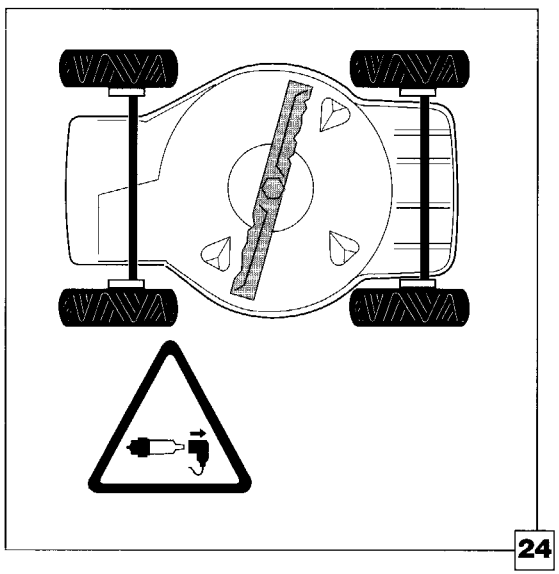

24

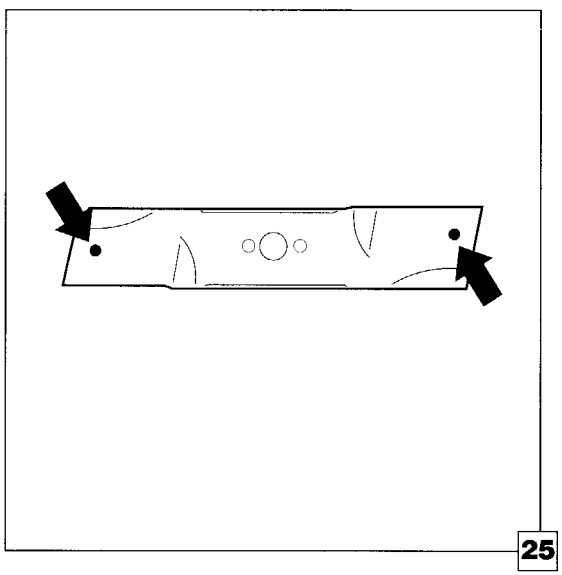

25

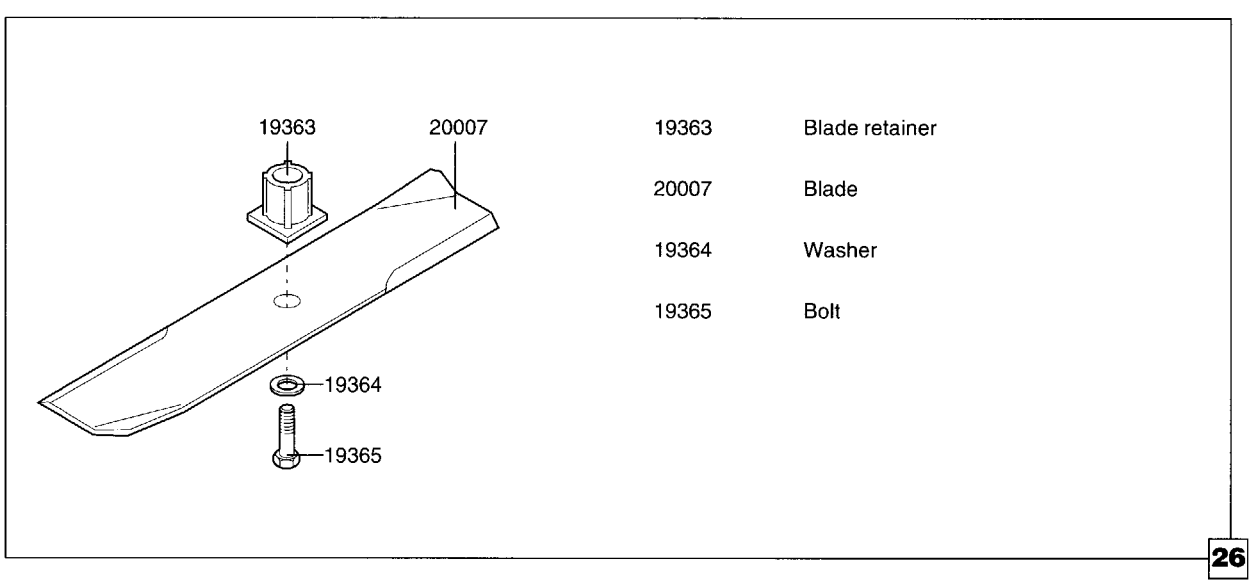

19363	Blade retainer
20007	Blade
19364	Washer
19365	Bolt

26

5 Maintenance and upkeep

5.1 Checking the cutter for damages
5.2 Cleaning the mower
5.3 Servicing the air filter
5.4 Exchanging the motor oil
5.5 Exchanging the spark plug
5.6 Adjusting the Bowden cable for motor operation
5.7 Adjusting the Bowden cable for the wheel drive
5.8 Adjusting the Bowden cable for the motor start/stop
5.9 Storing the mower

5.1 Checking the cutter for damages

Stop the motor, wait until the cutters stand still and remove the spark plug connector, when working on the mower. Danger of injury! If you are going to lay the mower on its side for a longer time, empty fuel tank fully first.

After the mower has hit against a hard object as e. g. a stone, proceed as follows:

- Turn the mower off and remove the spark plug connector
- Lay mower on the correct side (carburetor on top) (Fig. 24).
- Carefully check the cutting edge of the cutters for defects.

Bent or damaged cutters must not be used any longer. They have to be replaced.

Use only original TORO cutters. They have been designed especially for this unit and guarantee a perfect performance, safety and a long service life.

Have dull cutters sharpened.
For safety reasons a resharpening may be executed only up to the mark (Fig. 25).

If the same cutter is in use for too long, this might lead to wear and changes of the cutter section. A break of the cutter can be the consequence, and parts of the cutter can be hurled away.

Operate the mower only with perfect cutters!
Only use original TORO spare parts or parts released by TORO (reference numbers see fig. 26).

© 1998 by The Toro Company

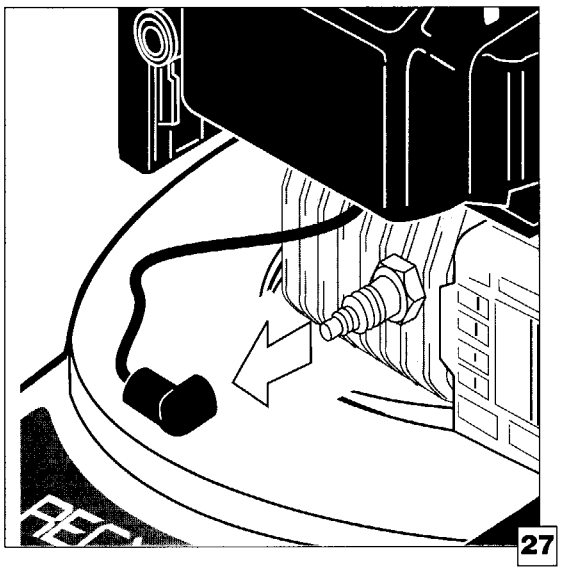
27

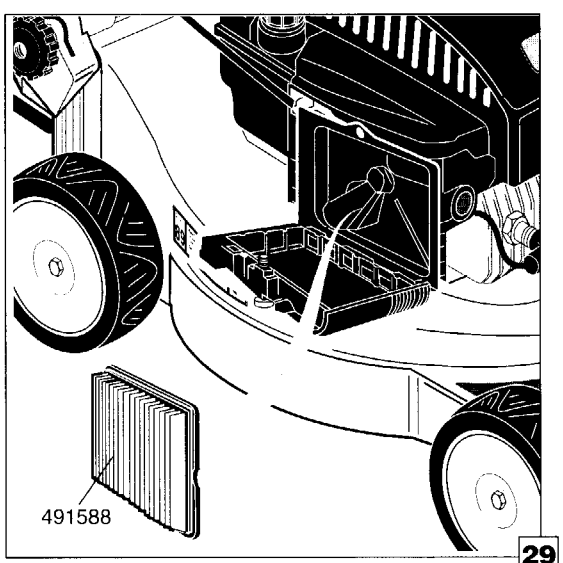

29

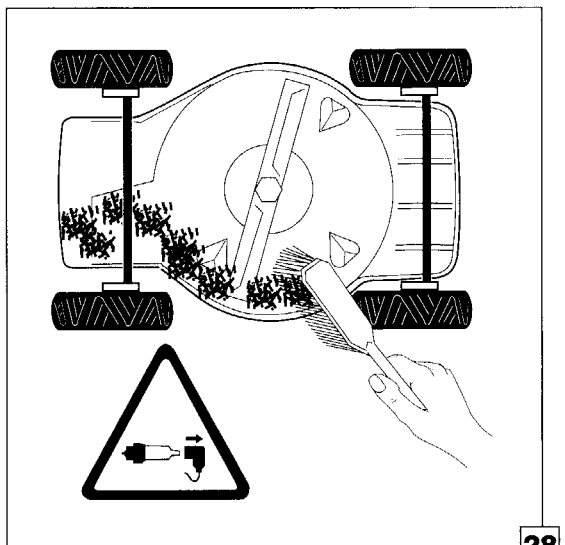
28

5.2 Cleaning the mower

Before cleaning the mower, stop the motor, wait until the cutters stand still and disconnect the spark plug connector. Danger of injury! (Fig. 27)

Do not wash the motor down with water.
Danger of motor breakdown!
Before tilting the mower, fully empty the fuel tank.
Only tilt mower far enough that the carburetor is on top.

Wipe off dirt and grass rests with a rag.
Lay mower on its side and clean the bottom side of the mower (Fig. 28).

5.3 Servicing the air filter

Clean air filter every 20 - 25 operating hours or after 3 months.
Clean more often if mower is used in dusty and dirty environment.

Ensure that the motor is standing still and the spark plug connector has been pulled off.

1. Slacken screw and fold cover down (fig.29).
2. Carefully remove air filter insert.
3. If only slightly soiled, knock it out carefully on a smooth surface, if heavily soiled, replace insert.

Do not start motor without air filter. Dust or dirt may cause serious damage to the motor.

4. Insert cleaned or new air filter insert, close cover and fasten with screw (reference number see fig. 29).

© 1998 by The Toro Company

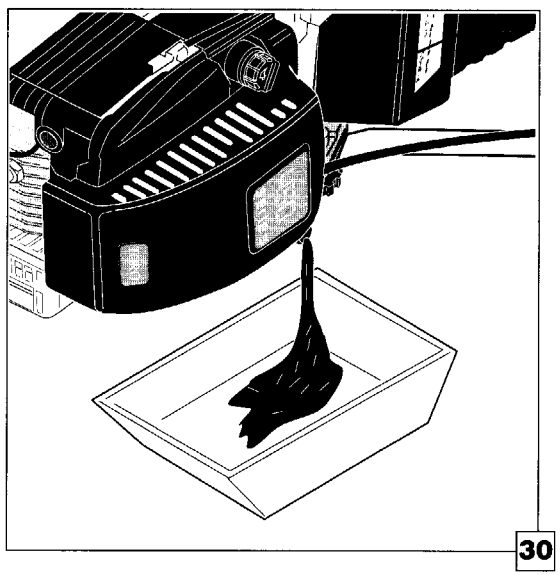
30

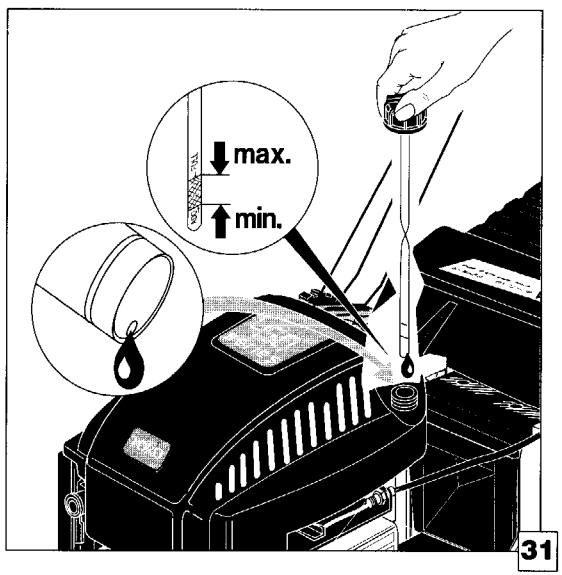

31

5.4 Exchanging the motor oil

Stop the motor, wait until the cutters stand still and remove the spark plug connector, when working on the mower. Danger of injury!

first oil exchange: after 5 operating hours.
all other oil exchanges: after 50 operating hours each, but at least once a year.

Let motor run for a few minutes before exchanging the oil.

Oil brands: with outside temperatures of above 4°C , use SAE 10W30 HD or 10W40 HD. With temperatures of below 4°C , use SAE 5W20 HD or 5W30 HD.

1. Drain fuel or and fully empty tank.
2. Place a flat tray or bowl under the oil filling pipe.
3. Unscrew the oil sealing plug and let the old oil drain in the tray (Fig. 30).

When exchanging oil, be careful to avoid that oil drips on the floor!

4. After all of the oil has been drained, place mower back on all four wheels and fill with new motor oil (approx. 0.6 liters). Check oil level (Fig. 31).
5. Screw sealing plug back on.

Old oil may not seep into the gound or get in the sewerage system. Collect the old oil in a larger container and deliver it to an old oil collecting place.

© 1998 by The Toro Company

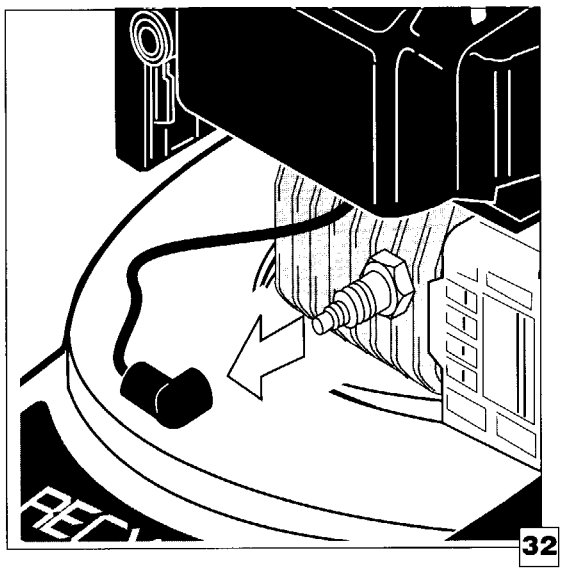

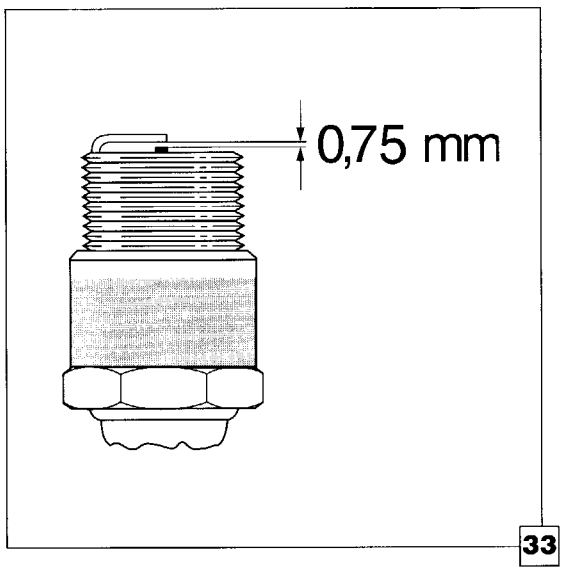

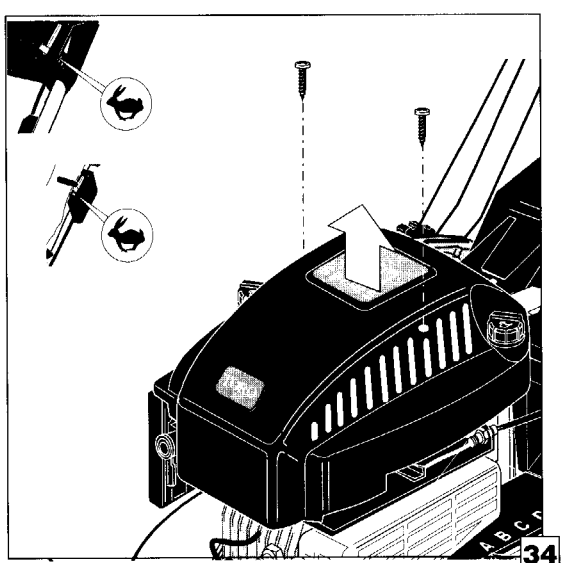

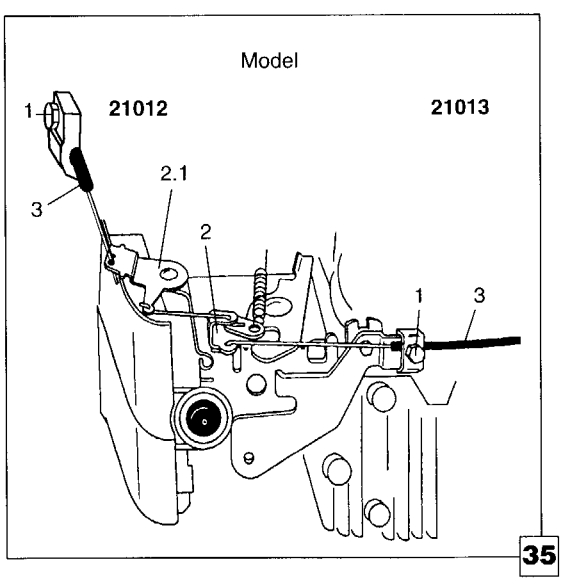

5.5 Exchanging the spark plug

Stop the motor, wait until the cutters stand still and remove the spark plug connector, when working on the mower. Danger of injury!

Persons with cardiac pacemakers may not work on the running motor and on live parts of the ignition system when the motor is started. It must be ensured that the motor is at standstill. Only then may the spark plug connector be pulled off.

1. Pull spark plug connector off the spark plug (Fig. 32).
2. Clean area around the spark plug
3. Unscrew spark plug

   Replace spark plug by an equivalent spark plug if it is broken, of bad quality or dirty.

   Recommended: Champion RJ 19 LM or equivalent
   Adjust electrode distance to 0.75 mm (Fig. 36).

   Insert spark plug with packing and tighten.

   Tightening torque: 20 Nm

   If a torque wrench is not available, screw spark plug tight.

5.6 Adjusting the Bowden cable for the motor operation

Problem: Motor has difficulties starting.

Stop the motor, wait until the cutters stand still and remove the spark plug connector, when working on the mower. Danger of injury! (Fig. 32)

1. Screw off screws from the motor cover and remove cover. push motor operating lever into position „fast". (fig. 34).
2. Slacken clamping screw (1)until Bowden cable slides through (fig. 35).
3. Turn accelerator (2) or (2.1) of the carburetor clockwise (full throttle position), pull sheath (3) of the individual Bowden cable tight and fasten with clamping screw (1).
4. Reinstall motor cover and screw tight (fig. 34).

© 1998 by The Toro Company

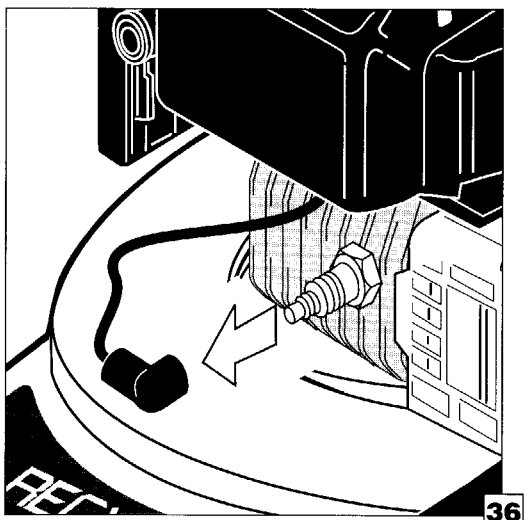
36

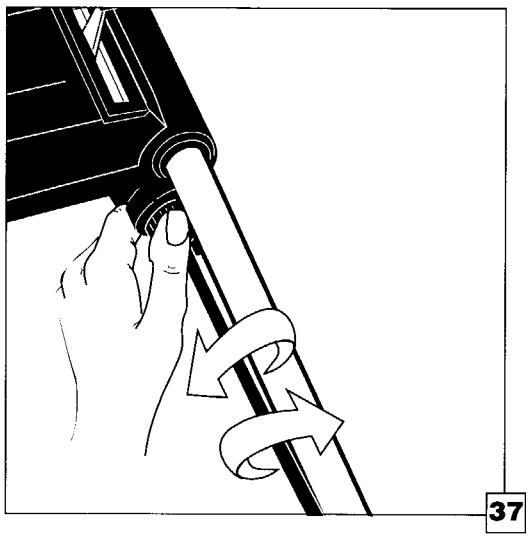
37

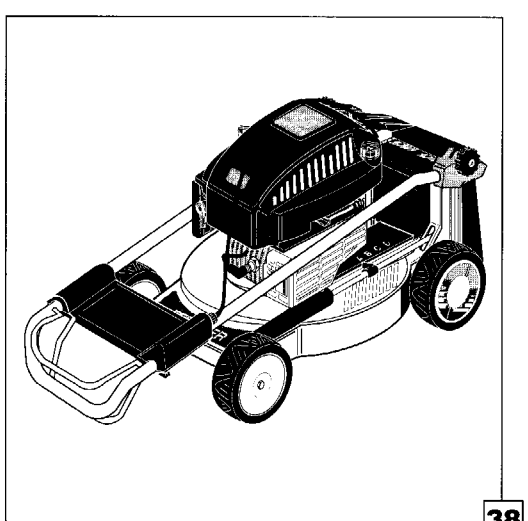
38

5.7 Adjusting the Bowden cable for the wheel drive
(only for mowers with wheel drive)

Problem: wheel drive cannot be turned on or off.

Stop the motor, wait until the cutters stand still and remove the spark plug connector, when working on the mower. Danger of injury! (Abb. 36)

1. If the wheel drive cannot be turned on, turn adjusting nut counterclockwise (fig. 37).
2. If the wheel drive cannot be turned off or the mower after having been turned off still moves, turn adjusting nut clockwise.

5.8 Adjusting the Bowden cable for the motor start/stop

The Bowden cable for the motor start/stop may only be adjusted or exchanged in an authorised TORO service station.

5.9 Storing the mower

Remove the spark plug connector.

Clean the mower.
Check all bolts, screws and nuts.
Replace damaged parts.

Use only original TORO spare parts resp. go to a specialized TORO-dealer.

Before longer storage, empty fuel tank and let the motor run to fully consume all the fuel.

Store the mower in a clean, dry place.
The handlebar may be folded down for this purpose (Fig. 38).

© 1998 by The Toro Company

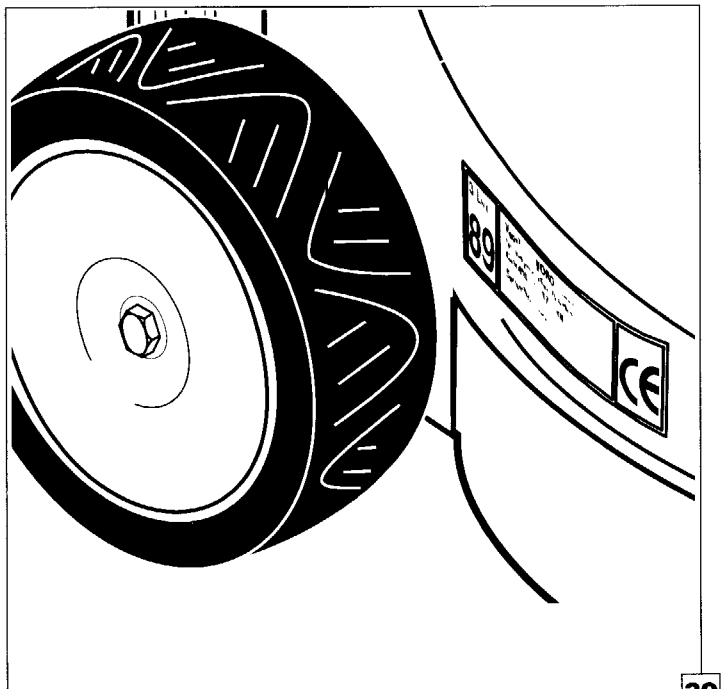

39

6 Spare parts and troubleshooting

6.1 Hints on spare parts ordering
6.2 Customer service address
6.3 Troubleshooting

6.1 Hints on spare parts ordering

Use only original TORO spare parts or parts released by the manufacturer.
This is the only way to guarantee for your safety and the safety of others.

The nameplate bears type and serial number of your TORO lawn mower (Fig. 39).
Always give both numbers when ordering spare parts or corresponding.

Insert the type and serial number of your TORO lawn mower here:

Type number:

Serial number:

Spare parts can be purchased at any TORO customer service by giving the type and serial number.

6.2 Customer service address

Insert here the address of your nearest TORO customer service:

© 1998 by The Toro Company

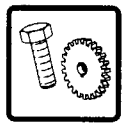

TROUBLESHOOTING

Problem	Possible cause	Remedial measures
Motor does not start.	1. Motor operating lever is not in position „fast".	1. Push lever into position „fast".
	2. Starting aid not pushed.	2. Push starting aid 3 times.
	3. Fuel tank is empty.	3. Refill fuel tank.
	4. Air filter element is dirty.	4. Clean air filter element.
	5. Spark plug is loose.	5. Tighten spark plug. Torque: 20 Nm.
	6. Ignition cable is loose or has come off the spark plug.	6. Attach ignition cable to the spark plug.
	7. Electrode distance is not correct.	7. Adjust electrode distance to 0.75 mm.
	8. Spark plug is defective.	8. Mount new spark plug.
	9. The carburetor is flooded.	9. Remove air filter element. Pull starter rope several times until the carburetor is empty and the motor starts. As soon as the motor starts, turn it off and mount the air filter element.
	10. Ignition system defective (no ignition spark).	10. Consult TORO customer service.
	11. Cutter is loose.	11. Consult TORO customer service.
	12. Motor stop is active.	12. Pull back safety lever.
	13. Bowden cable for motor operation not correctly adjusted.	13. Adjust Bowden cable.
Motor starts with difficulty, is not running smoothly or loses power.	1. Dirt or water in fuel tank.	1. Drain fuel and clean tank, refill tank with fresh, clean fuel.
	2. Vent hole in fuel tank cover is blocked.	2. Clean or replace tank cover.
	3. Air filter is soiled.	3. Clean air filter element.
	4. Cutter screw is loose.	4. Consult TORO customer service.
	5. Spark plug is defective.	5. Adjust electrode distance to 0.75 mm or mount new spark plug.
	6. Vent openings in motor hodd blocked.	6. Clean vent openings.
	7. Cooling fins and vent holes below the fan housing are blocked.	7. Clean cooling fins and vent holes.

© 1998 by The Toro Company

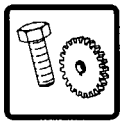

TROUBLESHOOTING

Problem	Possible cause	Remedial measures
Motor has spark failures at high speed.	1. Electrode distance of spark plug too small.	1. Adjust electrode distance to 0.75 mm.
Motor overheated.	1. Cooling air flow is obstructed. 2. Electrode distance of spark plug incorrect. 3. Wrong spark plug.	1. Clean vent openings in the hood, in the fan housing and the cooling fins on the motor. 2. Adjust electrode distance to 0.75 mm. 3. Mount correct spark plug with an electrode distance of 0.75 mm.
Motor has irregular vibrations.	1. Cutter screw is loose. 2. Cutter has not been balanced. 3. There is too much grass in the mowing channel.	1. Consult TORO customer service. 2. Consult TORO customer service. 3. Clean mower.
Only mower with wheel drive Wheel drive turned not off or mower moves forward in jolts	1. Bowden cable for wheel drive is misadjusted. 2. Clutch release fork lever has wrong adjustment or is defective. 3. Clutch is defective.	1. Adjust Bowden cable. 2. Consult TORO customer service. 3. Consult TORO customer service.
Wheel drive turned in but mower does not move.	1. V belt defective. 2. Free-wheel defective.	1. Consult TORO customer service. 2. Consult TORO customer service.

© 1998 by The Toro Company



7 Hints on tending the lawn

7.1 Spring
7.2 Summer
7.3 Autumn
7.4 Winter

7.1 Spring

Cleaning: The first cut and the cleaning should be done two or three weeks before the normal growth starts. To mow, the cutting height should be adjusted in such way that approx. 1.5 cm of the resting grass will be cut off. Thus an early greening of the lawn will be effected. In using the grass-collecting sack available as accessory, the winter litter can be removed, first, however, metal objects, stones, broken glass etc. which can damage the grass-collecting sack, must be gathered.
Mellowing: The soil should be treated with a mechanical mellowing device. Thus air, water and fertilizer may enter more easily and a deep rooting is stimulated.
Fertilization: For the fertilization of the lawn, a special lawn fertilizers is to be spread on the latter in early spring. This fertilization is to be repeated according to the demands you make on your lawn. Who wants to have a lush-green, dense lawn till into the winter, spreads the last dose in late summer. In any case it is advisable to have the fertilizer get soaked thoroughly shortly after the spreading - by rain or sprinkling. Hereby it is to be made sure that the fertilizer will not paste up (e. g. on uneven ground or when watering with a hose with a too strong jet of water). Moreover, you should not fertilize on new-mown grass, but some days before or after mowing. Each fertilization leads to a denser turf, however, the growth will be hastened at the same time.
Therefore you should pay special attention to mowing in good time, otherwise the precious flagellate grass will be suppressed. It is a big mistake to cut high grass real short. Especially in case of dryness, your lawn will get brown spots, if you cut the grass too short, which are often falsely referred to as damages caused by fertilization.
Watering: Sufficient watering is important, if you want to get a healthy lawn. Deep watering, when the grass needs it the most (shortly before withering), stimulates a deep rooting. Frequent and shallow watering effects a concentration of the roots near the surface and stimulates the weed growth.
Mowing: Frequent mowing is imperative for keeping your lawn healthy. It would be best to mow with such frequency that each time not more that 1/3 of the grass leaf is being cut. Thin or newly-sown lawns should be cut to 3.5 cm. This is to be repeated for about four or five weeks, so that the lawn will grow and become more dense.
Weed, insect and disease control: Most specialized dealers sell special chemicals for the control of the most different weeds, insects and diseases. The manufacturers' instructions as to the frequency of application, environmental effects and use of the specified means are to be observed in any case.
Sowing: Although the autumn is the most favourable season for this work, you can sow lawn in the course of the usual spring treatment.

7.2 Summer

Mowing: During the hot and dry summer months the lawn should not be cut too short, because this would let the grass get too dry and withered. When mowing with the grass-collecting device, weeds, seeds of weed and any other undesired plants can be removed with it.
Mellowing: According to the condition of the soil, a mellowing is due from time to time, especially if it is a dry summer.
Watering: In the hot summer months, withered grass is an indication for water demand. Deep watering is advisable during these months. Besides the common way of sprinkling by means of garden hoses, sprinkling systems to be installed into the soil are available, which are also manufactured by TORO. These sprinkling systems work automatically, however, they are also available for manual operation.

7.3 Autumn

Mowing: In autumn you should mow according to the same rules as have been said for the summer months. In autumn you should mow as long as the grass growth demands it. When using the grass-collecting device, the leaves will gather in the sack automatically and slightly cut up, and thus appropriate for composting.
Hints on cutting the leaves: You can also use the recycler for cutting the fallen leaves or other garden waste. If you want to store the leaves in plastic sacks, however, the number sacks to be filled will be smaller, since the leaves have been cut up before and thus they are reduced in volume. When working with the grass collecting device, part of the cut material will still get onto the lawn, where it can serve as fertilizer giving the soil important and precious nutrients until the next spring.

- Ensure yourself before mowing that the leaves are dry.
- Before you stop to recycle ensure yourself that approx. 50 % of the lawn is still to be seen on the mown area.
- In order to collect all the leaves and cut them up very finely, it is useful to walk slower and thus mix all the particles into the lawn.
- In case of lots of oak leaves, it is recommended to spread some lime onto the lawn in spring, in order to absorb the folic acid.

Watering: Since the soil should be damp at the beginning of the winter months, a regular watering in autumn is as important as in the summer months.
Sowing: This is the most suitable season for laying a lawn and for the resowing of existing lawn of thin growth.

7.4 Winter

Preparing the lawn for the winter: Who wants to have a beautiful, lush-green and hard-wearing lawn, should cover it every two to three years with compost or humous soil before the break of winter. After spreading the fine-crumbled humous soil, it should be raked into the sod thoroughly.

© 1998 by The Toro Company



The Toro Company, 8111 Lyndale Ave. So. , Bloomington, MN 55420 - 1196, USA

95-6772