Form Number 3329-926

5.5 hp Lawn Vacuum

Model No. 62925 - 240000001 and up.

Parts Catalog

Ordering Replacement Parts

To order replacement parts, please supply the part number, the quantity, and the description of each part desired.

Understanding Reference Numbers

Each Identified part in an illustration has a reference number. The reference number for a part also appears in the parts list, along with other information about the part.

This catalog uses two special reference number formats, one to indicate parts in a service assembly and another to indicate the quantity of a given part in an illustration.

Service Assembly Reference Numbers

Parts in service assemblies have reference numbers in the form a:b. The a represents the reference number of the entire service assembly and the b represents a sequential number unique to each part within the service assembly.

For example, a wheel assembly might be identified by reference number 6, the tire by 6:1, the valve by 6:2, and the wheel by 6:3. When you order the assembly identified by reference number 6, you receive all parts identified by reference numbers 6:1, 6:2, and 6:3. However, you may also order any part individually. Reference numbers of this type appear in illustrations and in part lists.

Reference Numbers Indicating Quantity

In an illustration, if a reference number indicates more than one part, the reference number has the form nX y. The n represents the quantity of the part, the X is the multiplication symbol, and the y represents the reference number.

For example, in an illustration, the reference number 2X 37 means that two of the parts identified by reference number 37 are indicated.

©The Toro Company - 2004
All Rights Reserved

Contents

Description	Page
Blower and Snout Assembly	3
Blower Assembly	4
Engine and Front Wheel Assembly	5
Traction and Wheel Assembly	6
Traction Assembly	7
Handle and Vacuum Bag Assembly	8
Cylinder Assembly Engine Briggs and Stratton Model 126402-0245-E1	9
Crankshaft Assembly Engine Briggs and Stratton Model 126402-0245-E1	10
Cylinder Head Assembly Engine Briggs and Stratton Model 126402-0245-E1	11
Crankcase Assembly Engine Briggs and Stratton Model 126402-0245-E1	12
Carburetor Assembly Engine Briggs and Stratton Model 126402-0245-E1	13
Air Cleaner Assembly Engine Briggs and Stratton Model 126402-0245-E1	14
Muffler and Fuel Tank Assembly Engine Briggs and Stratton Model 126402-0245-E1	15
Governor Assembly Engine Briggs and Stratton Model 126402-0245-E1	16
Blower Housing Assembly Engine Briggs and Stratton Model 126402-0245-E1	17
Starter Assembly Engine Briggs and Stratton Model 126402-0245-E1	18
Oil Filter, Tube and Pump Assembly Engine Briggs and Stratton Model 126402-0245-E1	19
Gasket Assembly Engine Briggs and Stratton Model 126402-0245-E1	20
Carburetor Overhaul Kit Assembly Engine Briggs and Stratton Model 126402-0245-E1	21
Cylinder Assembly Engine Briggs and Stratton Model 126302-0245-E1	22
Crankshaft Assembly Engine Briggs and Stratton Model 126302-0245-E1	23
Cylinder Head Assembly Engine Briggs and Stratton Model 126302-0245-E1	24
Crankcase Assembly Engine Briggs and Stratton Model 126302-0245-E1	25
Carburetor Assembly Engine Briggs and Stratton Model 126302-0245-E1	26
Air Cleaner Assembly Engine Briggs and Stratton Model 126302-0245-E1	27
Muffler and Fuel Tank Assembly Engine Briggs and Stratton Model 126302-0245-E1	28
Governor Assembly Engine Briggs and Stratton Model 126302-0245-E1	29
Blower Housing Assembly Engine Briggs and Stratton Model 126302-0245-E1	30
Starter Assembly Engine Briggs and Stratton Model 126302-0245-E1	31
Oil Tube and Dipstick Assembly Engine Briggs and Stratton Model 126302-0245-E1	32
Gasket Assembly Engine Briggs and Stratton Model 126302-0245-E1	33
Carburetor Overhaul Kit Assembly Engine Briggs and Stratton Model 126302-0245-E1	34

Part Description Abbreviations

Part descriptions in this catalog may include the following abbreviations.

AR. . . . . as required
ASM. . . . . assembly
CARR. . . . . carriage
DEG. . . . . degrees
FH. . . . . flat head
GA. . . . . gauge
HF. . . . . hex flange
HH. . . . . hex head
HHF. . . . . hex head flange
HHFTF. . . . . hex head flange thread forming
HJ. . . . . hex jam
HLH. . . . . hex lag head
HOC. . . . . height-of-cut
HS. . . . . hex
HSBH. . . . . hex socket button head
HSFH. . . . . hex socket flat head
HSH. . . . . hex socket head
HWH. . . . . hex washer head
HWHTF. . . . . hex washer head thread forming
HYD. . . . . hydraulic
INC. . . . . incorporated
LH. . . . . left hand
NI. . . . . nylon insert
PPH. . . . . phillips pan head
PTH. . . . . phillips truss head
PTO. . . . . power take off
RH. . . . . right hand
SFH. . . . . slotted fillister head
SHH. . . . . slotted hex head
SHWH. . . . . slotted hex washer head
SPH. . . . . slotted pan head
SQH. . . . . square head
SRH. . . . . slotted round head
STD. . . . . standard
TAP. . . . . self tapping
TTH. . . . . torx truss head
WH. . . . . wing head

Footnotes

❶ Not serviced separately
❷ Included in Gasket Set-Ref. 358.
❸ Included in Engine Gasket Set-Ref. 358.
❹ Included in Valve Gasket Set-Ref. 1095.
❺ Included in Carburetor Overhaul Kit-Ref. 121.
❻ Included in Carburetor Gasket Set-Ref. 977.
❼ Obtain parts from your local Briggs & Stratton dealer

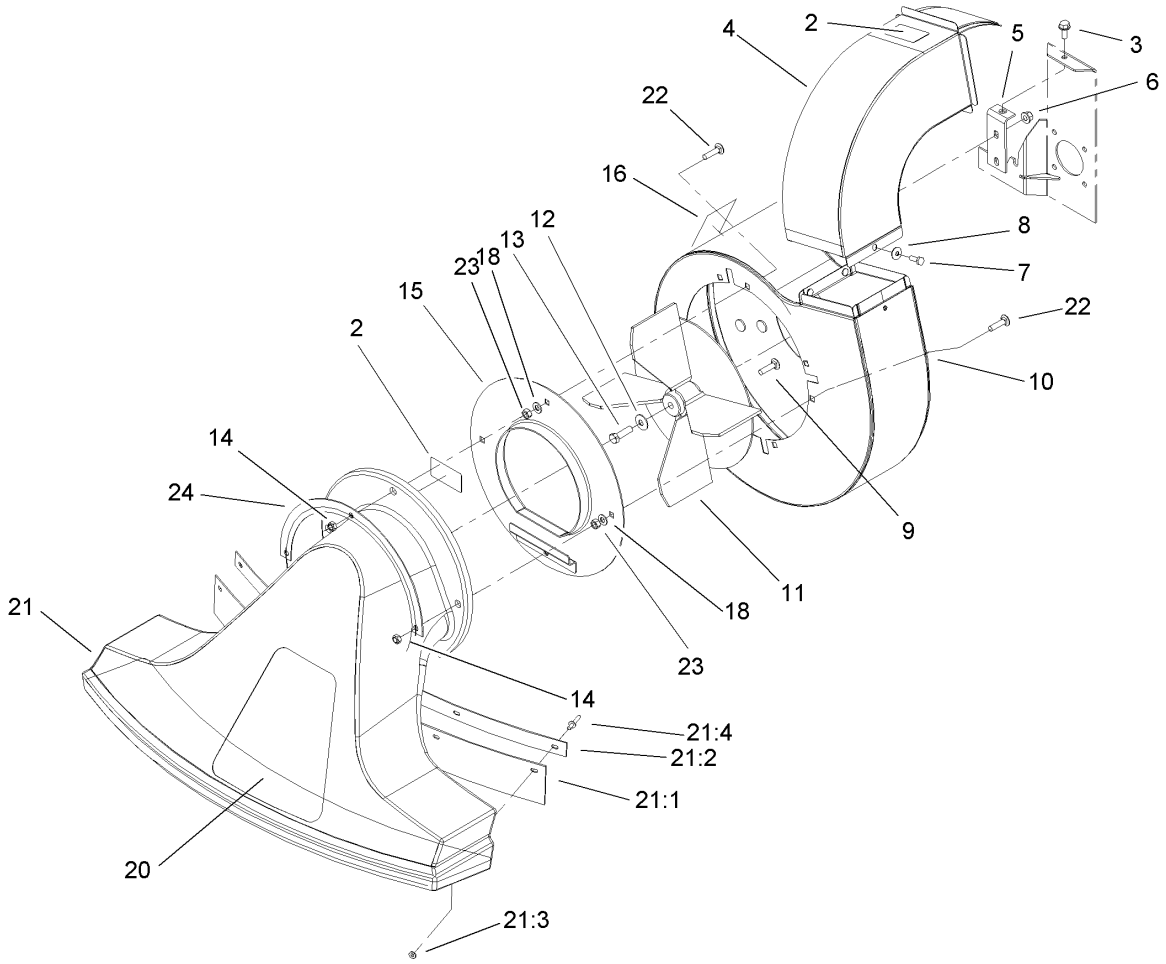

Blower and Snout Assembly

Ref	Part No.	Qty.	Description
2	93-4139	2	Decal-Bag Caution
3	32144-70	1	Screw-HH
4	20-6130-01	1	Vacuum Chute ASM
5	105-1233-03	1	Bracket-Mounting, Housing
6	3296-58	4	Nut-Lock NI
7	321-2	1	Screw-HH
8	3290-436	1	Washer-Belleville
9	3230-19	1	Screw-CARR
10	20-5890-01	1	Housing-Blower ASM
11	93-3677-03	1	Fan ASM
12	3290-340	1	Washer-Belleville
13	3211-5	1	Screw-HH
14	3296-47	4	Nut-Lock, NI
15	20-5450-01	1	Cover-Blower ASM
16	105-4062	1	Decal-Warning, Rotate
18	3256-23	3	Washer-Flat
20	105-8519	1	Decal - Toro Vacuum
21	40-7000	1	Snout ASM
21:1	20-6830	1	Rubber Flap
21:2	20-6840-03	1	Clamp-Flap
21:3	3256-51	5	Washer-Flat
21:4	3269-22	5	Rivet-Pop
22	3230-3	3	Screw-CARR
23	3217-6	3	Nut-Hex

Ref	Part No.	Qty.	Description
24	105-8543-03	1	Flange-Retainer

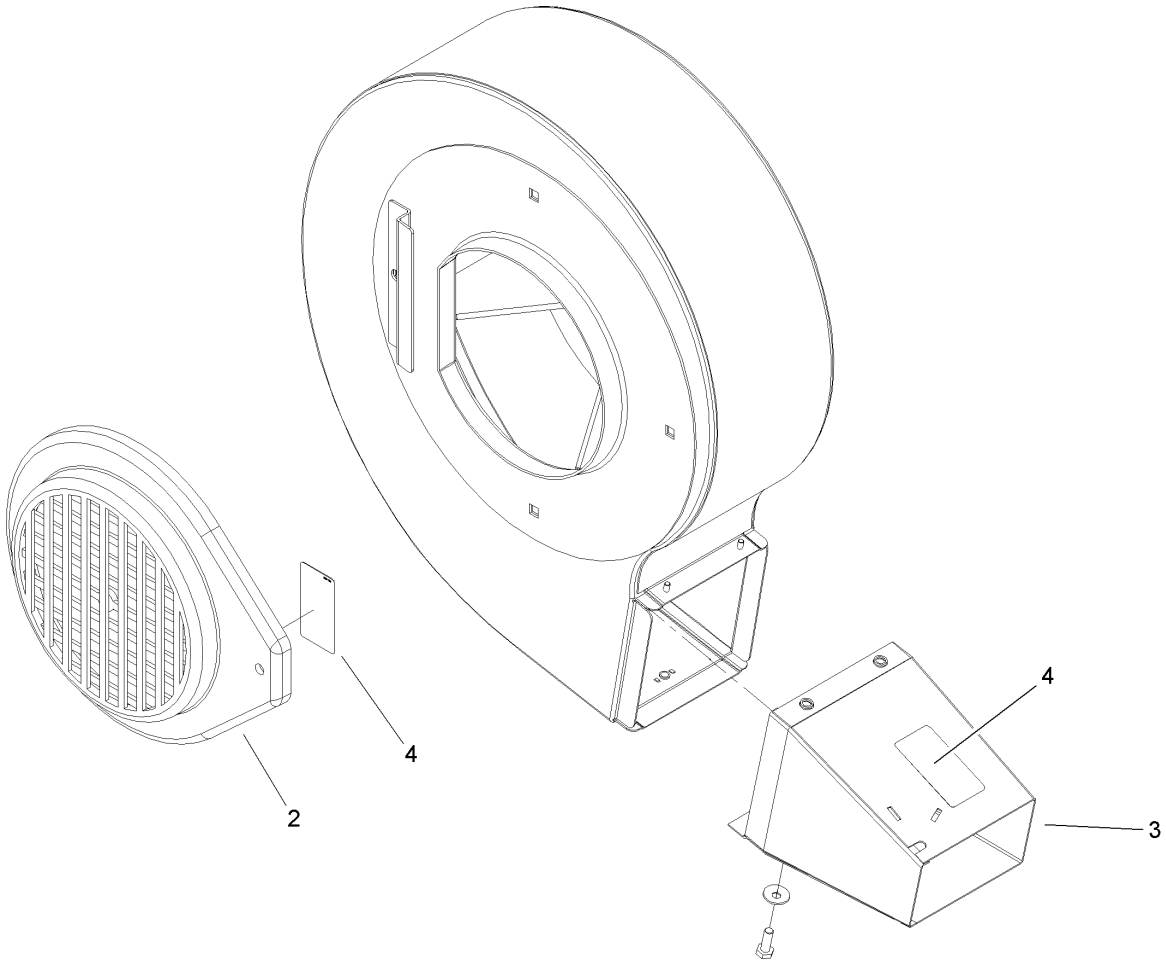

Blower Assembly

Ref	Part No.	Qty.	Description
2	20-5780	1	Intake-Blower
3	93-4124-01	1	Exhaust-Blower
4	93-4139	2	Decal-Bag Caution

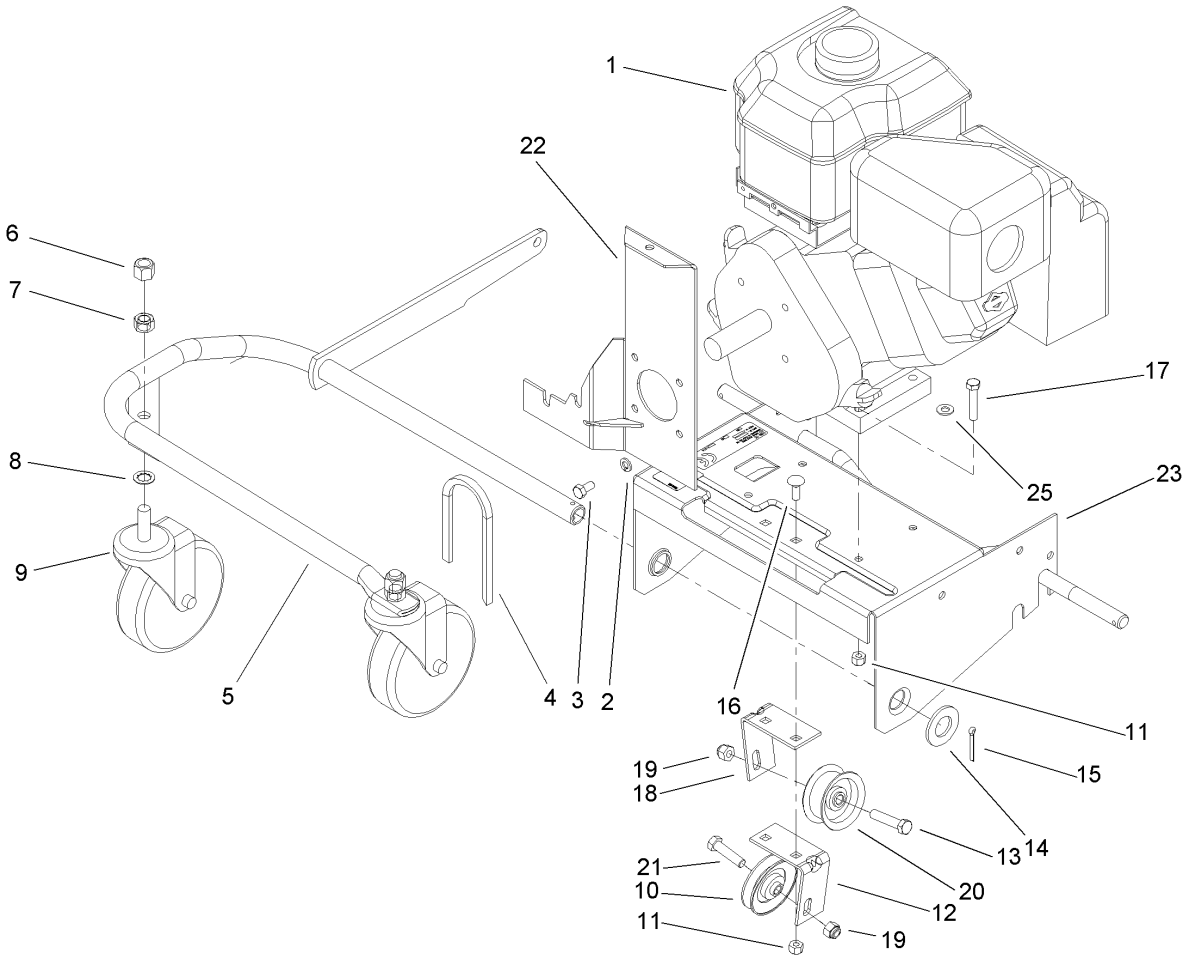

Engine and Front Wheel Assembly

Ref	Part No.	Qty.	Description
❶1		1	Engine Briggs And Stratton Model No. 126402-0245-E1
❶1		1	Engine Briggs And Stratton Model No. 126302-0245-E1
2	3253-4	4	Washer-Lock
3	3210-2	4	Screw-HH
4	20-5990	1	V Belt
5	93-4146-03	1	Support-Wheel, Front ASM
6	3296-23	2	Nut-Lock, NI
7	3217-9	2	Nut-Hex
8	3254-4	2	Washer-Lock/int
9	23-3320	2	Caster
10	12-5820	1	Pulley-Idler
11	3296-29	6	Nut-Lock, NI
12	20-8690-03	1	Bracket-Idler Mount, LH
13	323-9	1	Screw-HH
14	3256-29	1	Washer-Flat
15	3272-17	1	Pin-Cotter
16	3230-1	2	Bolt-CARR
17	322-8	4	Screw-HH
18	20-8680-03	1	Bracket-Idler Mount, RH
19	3296-39	2	Nut-Lock, NI
20	12-6700	1	Pulley-Idler
21	323-8	1	Screw-HH

Ref	Part No.	Qty.	Description
22	105-1232-03	1	Bracket-Stabalizer ASM
23	20-5560-03	1	Plate-Engine ASM
25	3256-23	1	Washer-Flat

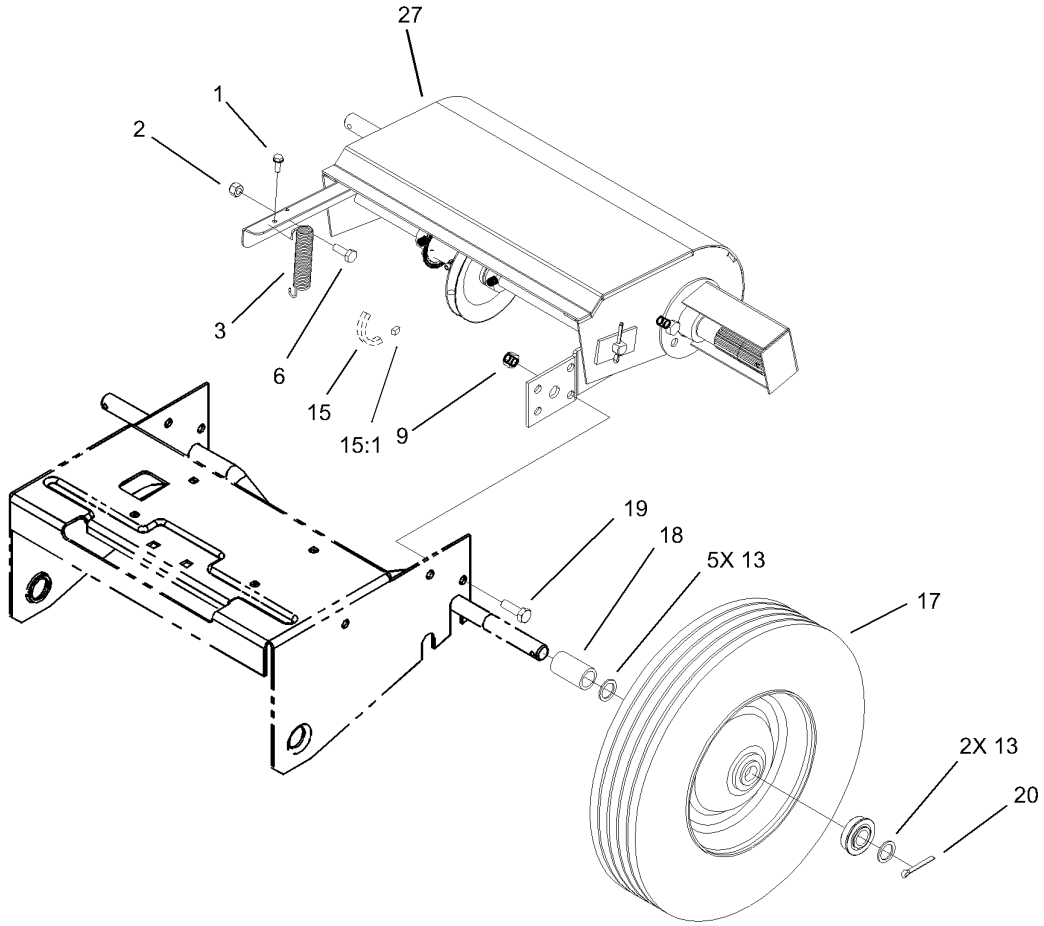

Traction and Wheel Assembly

Ref	Part No.	Qty.	Description
1	32140-32	1	Screw-HH
2	95-5768	1	Nut-Lock NI
3	23-3520	1	Spring-Traction
6	25-8640	1	Screw-HH
9	3296-29	6	Nut-Lock, NI
13	7-3590	7	Washer
15	3-3434	1	Chain-Roller, Reel Drive
15:1	2710-31	1	Link-Connecting #35
17	20-6100	2	Wheel
18	20-5410	2	Spacer-Axle
19	322-5	6	Screw-HH
20	3272-17	2	Pin-Cotter
❶27		1	Traction ASM

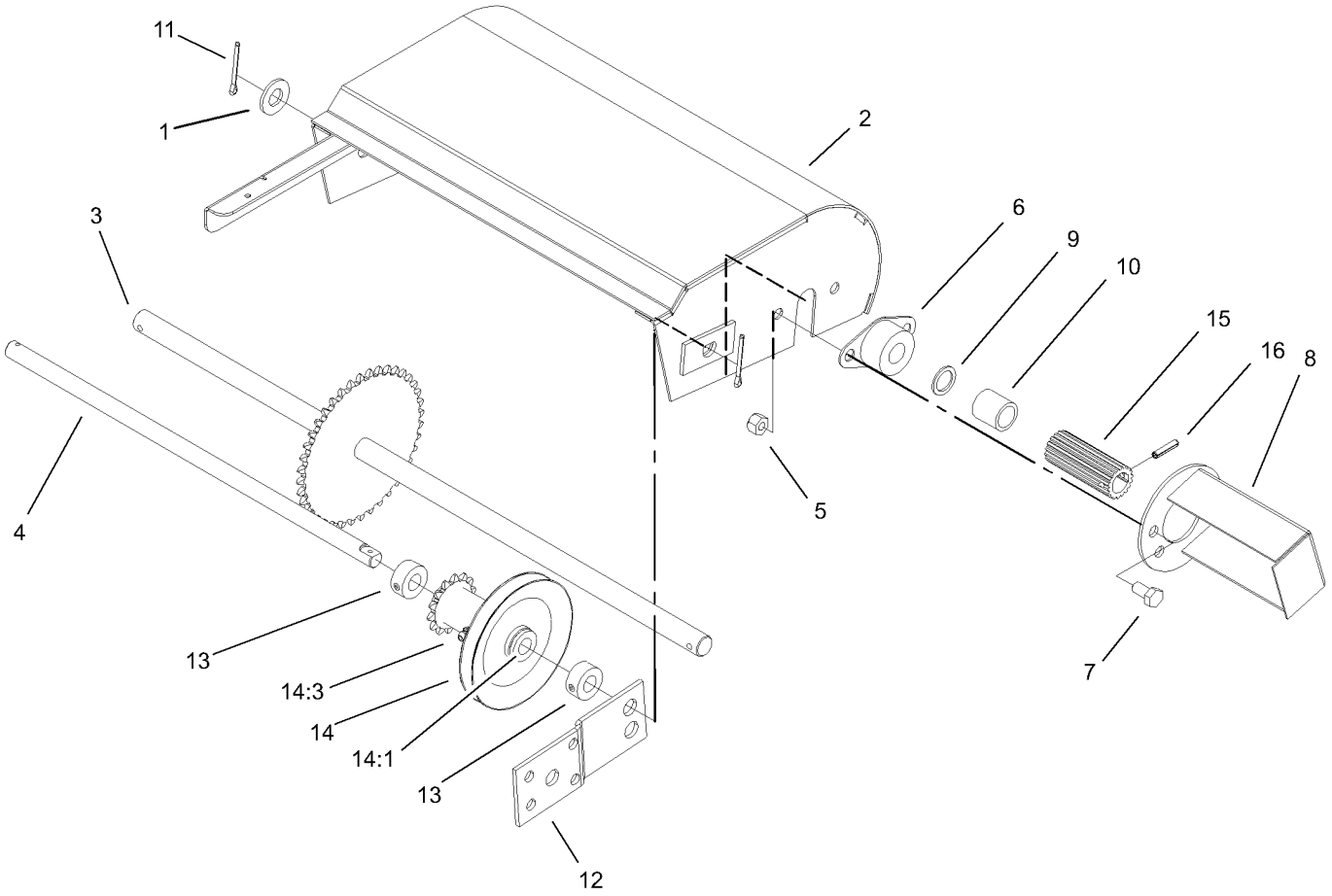

Traction Assembly

Ref	Part No.	Qty.	Description
1	3256-26	1	Washer-Flat
2	93-8461-03	1	Guard
3	20-7270	1	Shaft-Friction Wheel
4	20-5870	1	Shaft-Idler
5	3296-29	4	Nut-Lock, NI
6	106-2780	2	Bearing - Flange
7	322-2	4	Screw-HH
8	37-9210-03	2	Guard-Sp
9	7-3590	2	Washer
10	20-5460	2	Spacer
11	3272-7	2	Pin-Cotter
12	43-6830-03	2	Bracket-Mounting
13	20-5950	2	Collar-Set Screw
14	20-6000	1	Idler ASM
14:1	256-105	2	Bushing-Flange
14:3	302-5	1	Fitting-Grease
15	20-5960	2	Wheel-Friction
16	32121-4	2	Pin-Roll, Slotted

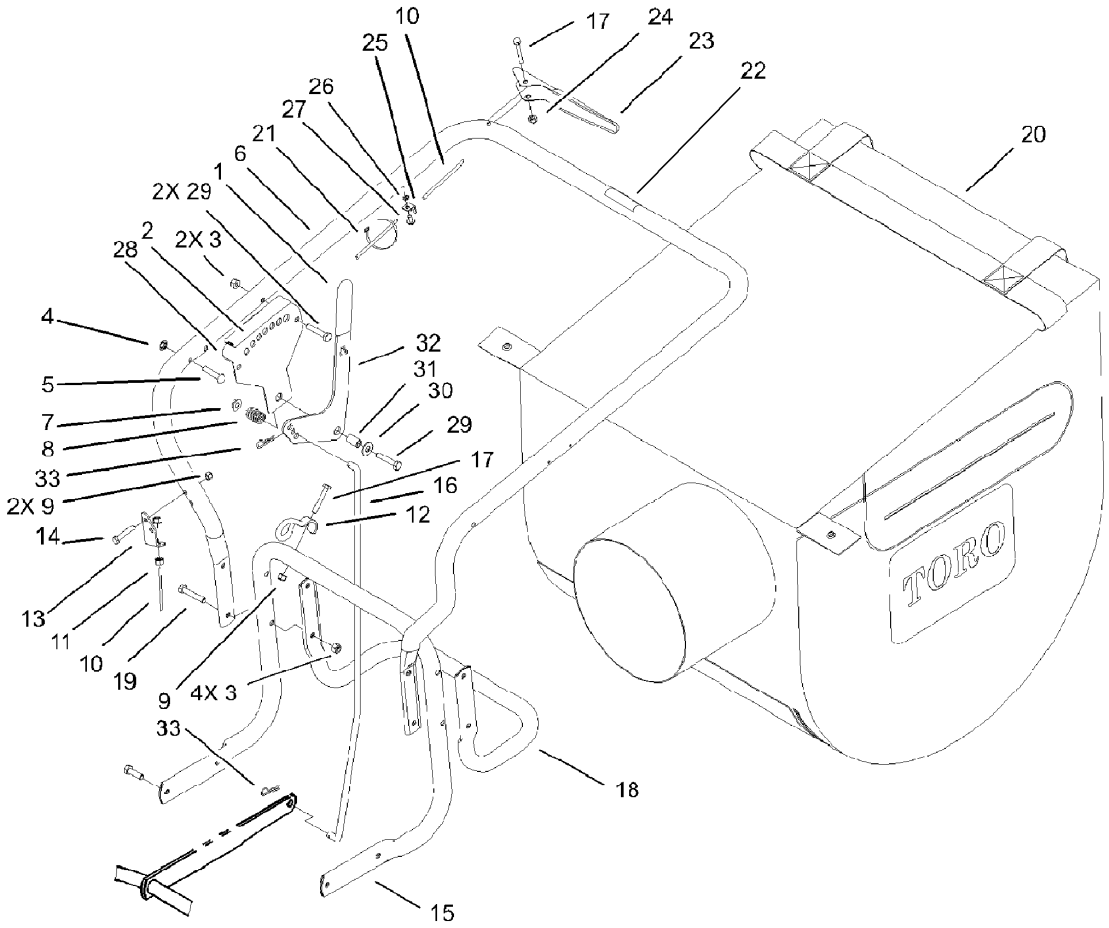

Handle and Vacuum Bag Assembly

Ref	Part No.	Qty.	Description
1	3-7877	1	Grip-Handle
2	93-4137	1	Decal-Height Adjustment
3	3296-29	6	Nut-Lock, NI
4	3290-418	2	Nut-Push In
5	3263-9	2	Rivet-Button Head
6	23-3570	1	Handle-Upper, Vacuum
7	32128-13	1	Nut-HF
8	20-6110	1	Spring-Compression
9	3296-42	3	Nut-Lock, NI
10	105-1234	1	Cable-Traction
11	32149-5	2	Nut-Keps
12	46-8082	1	Guide-Rope
13	33-2830	1	Mount-Bowden, Lower
14	321-9	2	Screw-HH
15	105-1236	1	Handle-Lower
16	105-1235	1	Rod-Height Adjust
17	321-10	2	Screw-HH
18	66-1640-03	1	Support-Bag
19	322-9	4	Screw-HH
20	105-1245	1	Bag-Vacuum
21	3290-378	1	Tie-Cable
22	93-4141	1	Decal-Traction Control
23	93-8464	1	Lever W/grip
24	32111-7	1	Nut-Cap

Ref	Part No.	Qty.	Description
25	20-8780	1	Retaining-Clip
26	3255-17	1	Washer-Lock/ext
27	32144-112	1	Screw-HWH
28	20-5820-03	1	Bracket-Adjustment
29	322-8	3	Screw-HH
30	3256-3	1	Washer-Flat
31	20-5650	1	Spacer-Adjust
32	23-3410-03	1	Handle-Height Adjust
33	3290-250	2	Pin-Hair

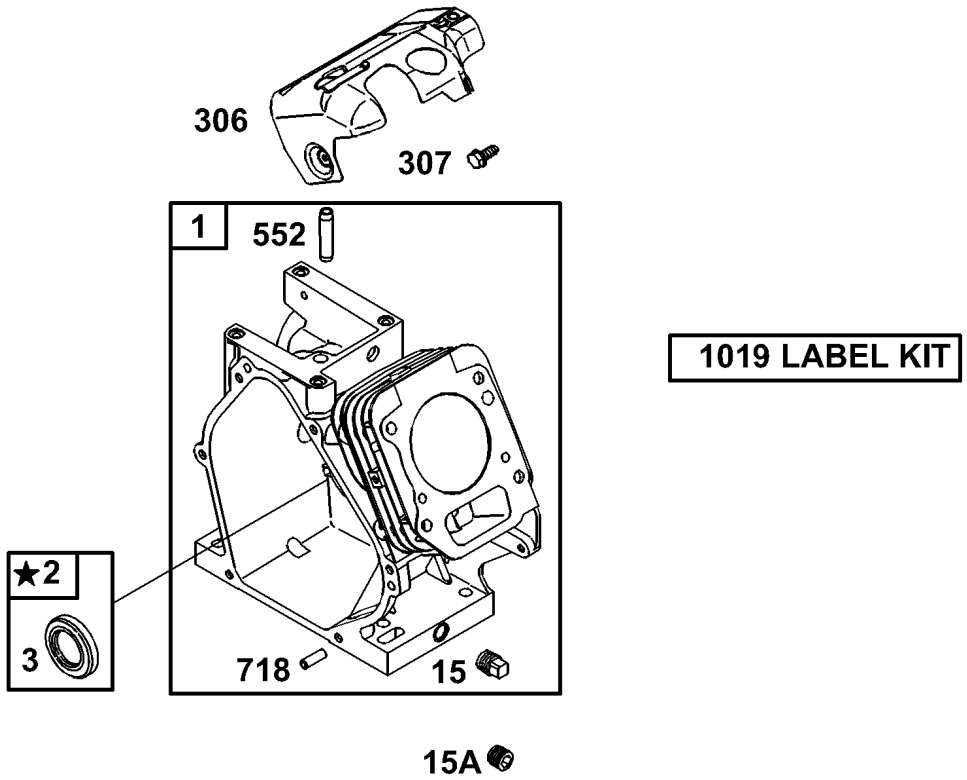

1019 LABEL KIT

★ REQUIRES SPECIAL TOOLS TO INSTALL. SEE REPAIR INSTRUCTION MANUAL.

Assemblies include all parts shown in frames.

Cylinder Assembly
Engine Briggs and Stratton Model 126402-0245-E1

Ref	Part No.	Qty.	Description
❼1	693811	1	Cylinder ASM
❼2	399269	1	Bushing/seal Kit (Magneto Side)
❸❼3	299819	1	Oil Seal (Magneto Side)
❼15	691686	1	Oil Drain Plug (Square Head)
❼15A	691682	1	Oil Drain Plug (Flush)
❼306	693610	1	Cylinder Shield
❼307	690345	1	Screw (Cylinder Shield)
❼552	692346	1	Governor Crank Bushing
❼718	690959	1	Locating Pin
❼1019	694851	1	Label Kit

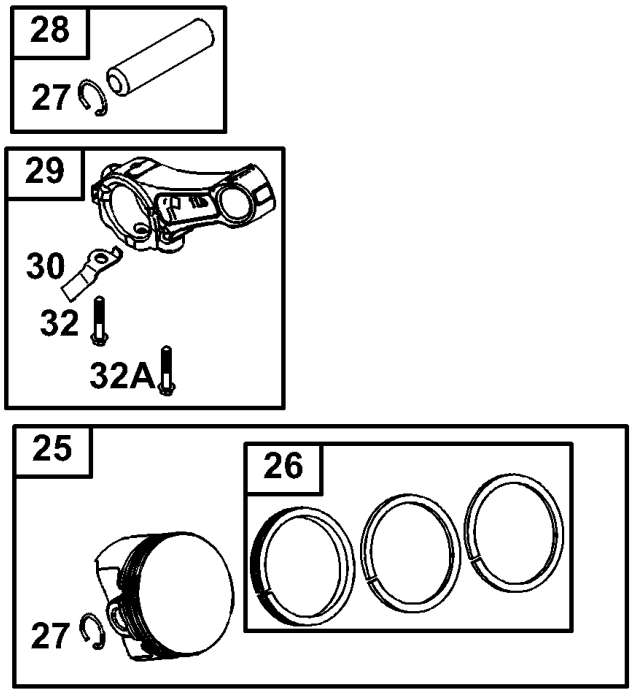

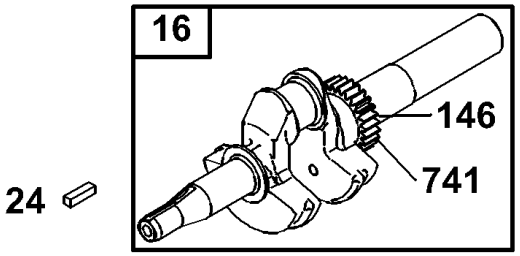

Assemblies include all parts shown in frames.

Crankshaft Assembly
Engine Briggs and Stratton Model 126402-0245-E1

Ref	Part No.	Qty.	Description
❼16	693596	1	Crankshaft
❼24	222698	1	Flywheel Key
❼25	690021	1	Piston Assembly (Standard)
❼	694167	1	Piston ASM (.010in Oversize)
❼	694168	1	Piston Assembly (.020in Oversize)
❼	694169	1	Piston ASM (.030in Oversize)
❼26	499631	1	Ring Set (Standard)
❼	692785	1	Ring Set (.010in Oversize)
❼	692786	1	Ring Set (.020in Oversize)
❼	692787	1	Ring Set (.030in Oversize)
❼27	691866	1	Piston Pin Lock
❼28	499423	1	Piston Pin
❼29	690124	1	Connecting Rod
❼30	692562	1	Connecting Rod Dipper
❼32	691664	1	Screw (Connecting Rod)
❼32A	695759	1	Screw (Connecting Rod)
❼146	690979	1	Timing Key
❼741	695087	1	Timing Gear

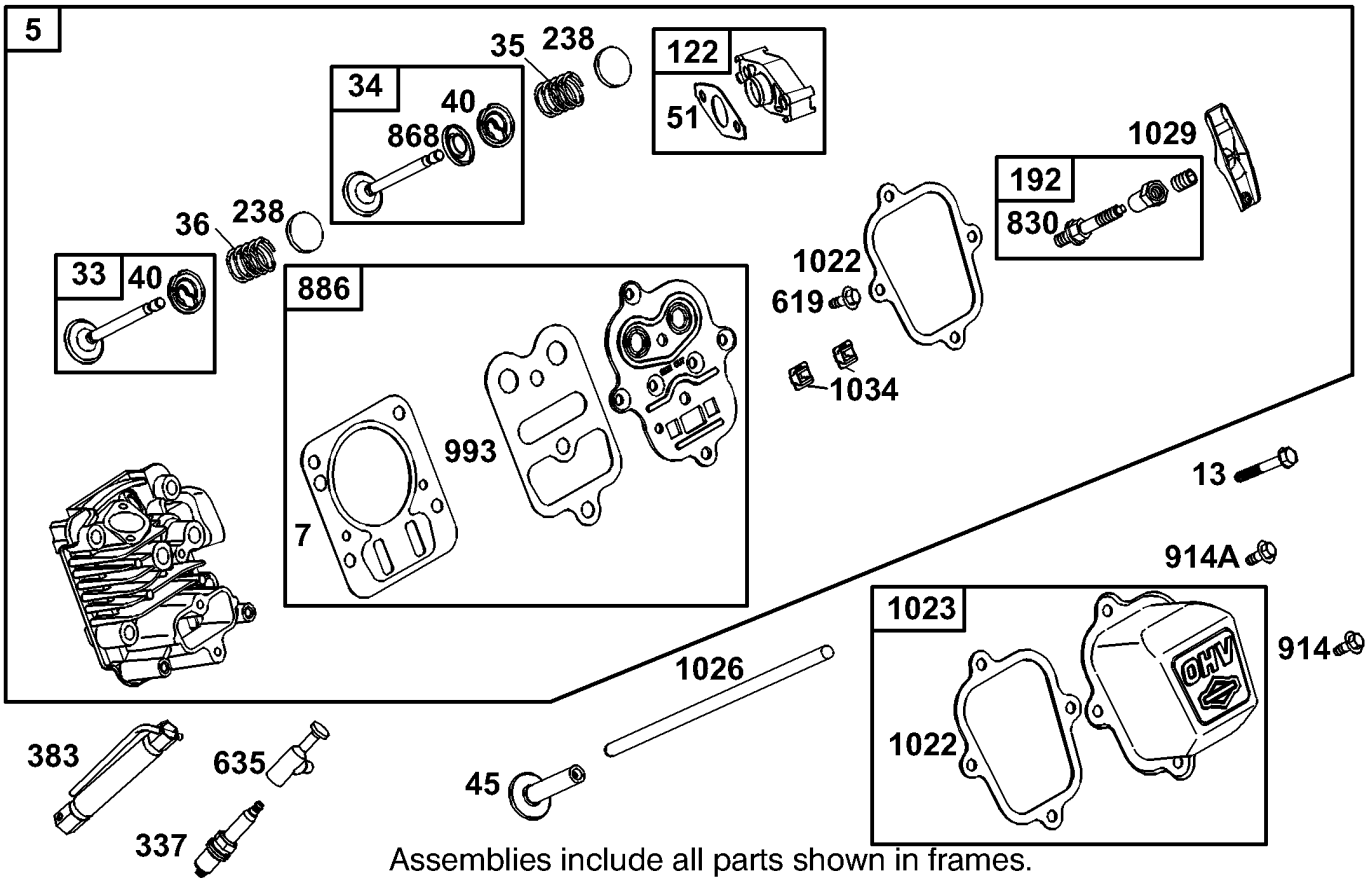

Assemblies include all parts shown in frames.

Cylinder Head Assembly
Engine Briggs and Stratton Model 126402-0245-E1

Ref	Part No.	Qty.	Description
❼5	693643	1	Cylinder Head
❸❹❼	695166	1	Cylinder Head Gasket
❼13	691137	1	Screw (Cylinder Head)
❼33	499642	1	Exhaust Valve
❼34	499641	1	Intake Valve
❼35	691304	1	Valve Spring (Exhaust)
❼36	691304	1	Valve Spring (Exhaust)
❼40	692194	1	Valve Retainer
❼45	690977	1	Valve Tappet
❸❹❺❻51	692555	1	Intake Gasket
❸❺❼122	693749	1	Carburetor Spacer
❼192	694543	1	Rocker Arm Adjuster
❼238	691300	1	Valve Cap
❼337	691043	1	Spark Plug
❼383	19374	1	Spark Plug Wrench
❼619	691108	1	Screw (Cylinder Head Plate)
❼635	692076	1	Spark Plug Boot
❼830	694544	1	Rocker Arm Stud
❸❹❼868	692044	1	Valve Seal
❼886	696268	1	Cylinder Head/plate Gasket Kit
❼914	692198	1	Screw (Rocker Cover)

Ref	Part No.	Qty.	Description
❼914A	692557	1	Screw (Rocker Cover) (Top)
❸❹❼993	694088	1	Cylinder Head Plate Gasket
❸❹❼1022	691890	1	Rocker Cover Gasket
❼1023	499924	1	Rocker Cover
❼1026	693517	1	Push Rod
❼1029	691230	1	Rocker Arm
❼1034	691343	1	Push Rod Guide

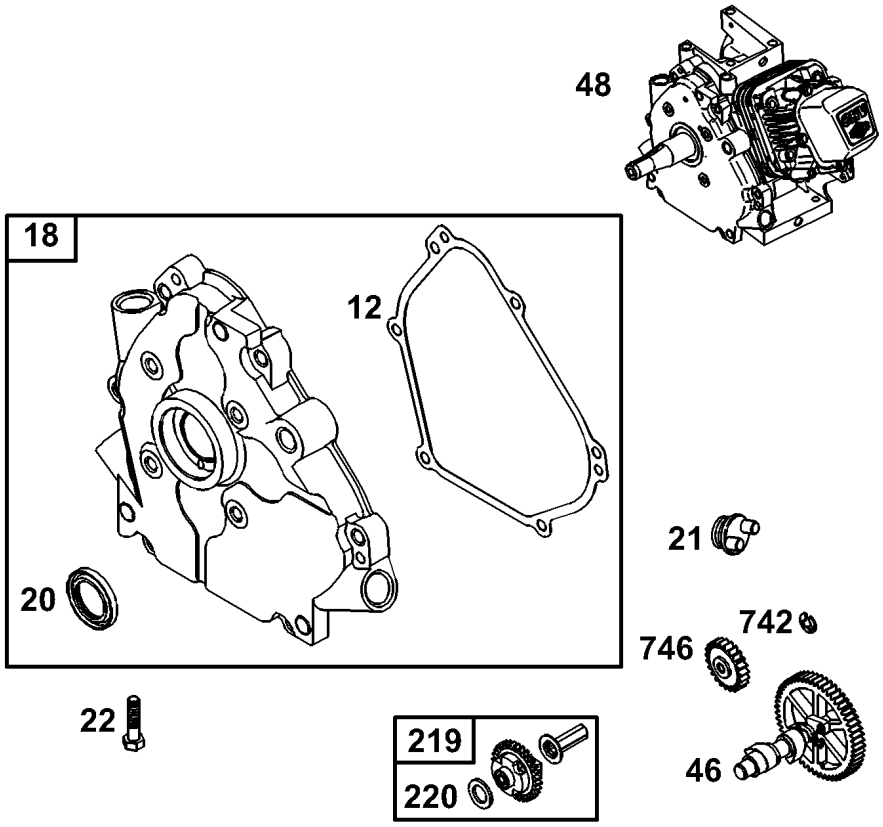

Assemblies include all parts shown in frames.

Crankcase Assembly
Engine Briggs and Stratton Model 126402-0245-E1

Ref	Part No.	Qty.	Description
❸❼12	692549	1	Crankcase Cover Gasket
❼18	694466	1	Crankcase Cover
❸❼20	692550	1	Oil Seal (Pto Side)
❼21	281658	1	Oil Fill Cap
❼22	692551	1	Screw (Crankcase Cover/sump)
❼46	693404	1	Camshaft
❼48	693781	1	Short Block
❼219	693578	1	Governor Gear
❼220	691724	1	Washer (Governor Gear)
❼742	692564	1	E–ring Retainer
❼746	692566	1	Idler Gear

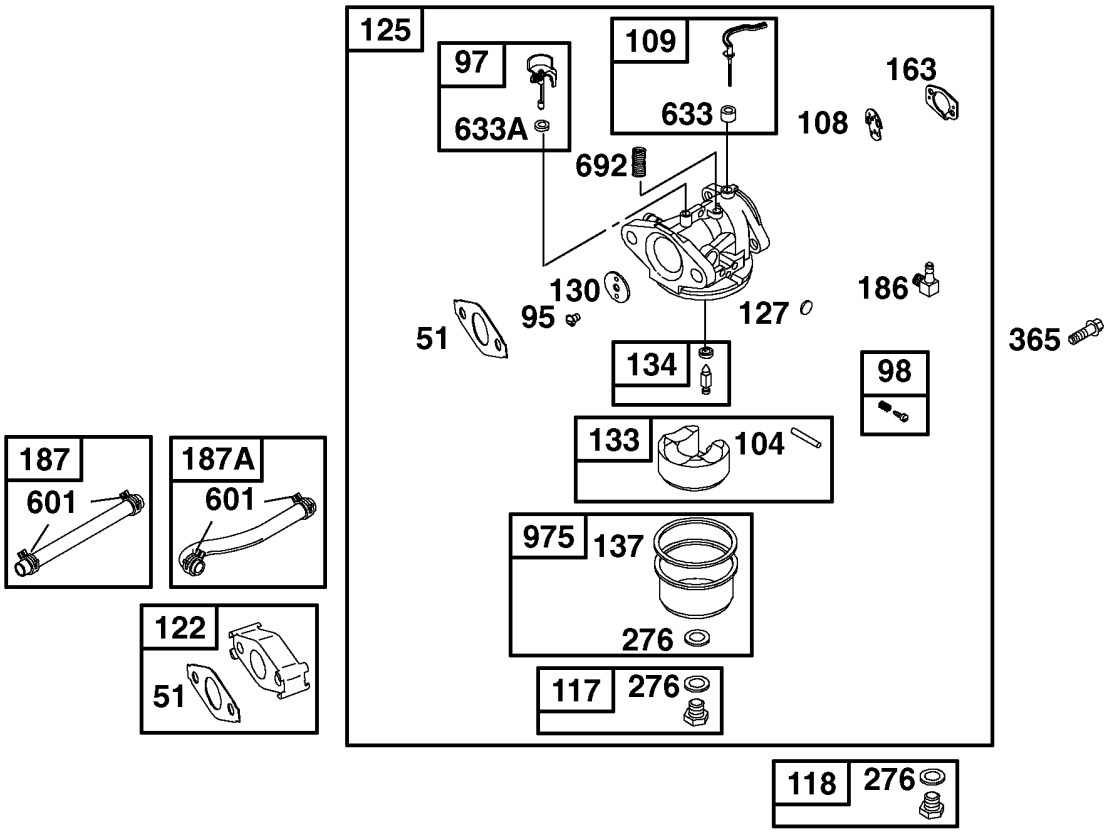

Assemblies include all parts shown in frames.

Carburetor Assembly
Engine Briggs and Stratton Model 126402-0245-E1

Ref	Part No.	Qty.	Description
❸❹51 ❺❻	692555	1	Intake Gasket
❼95	691636	1	Screw (Throttle Valve)
❼97	690024	1	Throttle Shaft
❼98	398185	1	Idle Speed Kit
❺❼104	691242	1	Float Hinge Pin
❼108	692567	1	Choke Valve
❼109	693628	1	Choke Shaft
❼117	498978	1	Main Jet (Standard)
❼118	497466	1	Main Jet (High Altitude)
❸❺122 ❼	693749	1	Carburetor Spacer
❼125	697028	1	Carburetor
❺❼127	691739	1	Welch Plug
❼130	691181	1	Throttle Valve
❼133	398187	1	Carburetor Float
❺❼134	398188	1	Needle/seat Kit
❺❻137 ❼	693981	1	Float Bowl Gasket
❸❺163 ❻❼	696979	1	Air Cleaner Gasket
❼186	692317	1	Hose Connector
❼187	691050	1	Fuel Line (Cut To Required Length)
❼187A	692601	1	Line–fuel (Molded)

Ref	Part No.	Qty.	Description
❺❻276 ❼	271716	1	Sealing Washer
❼365	692568	1	Screw (Carburetor)
❼601	95162	1	Hose Clamp
❺❻633 ❼	693867	1	Choke/throttle Shaft Seal
❺❻633A ❼	691321	1	Choke/throttle Shaft Seal
❼692	690572	1	Detent Spring
❼975	493640	1	Float Bowl

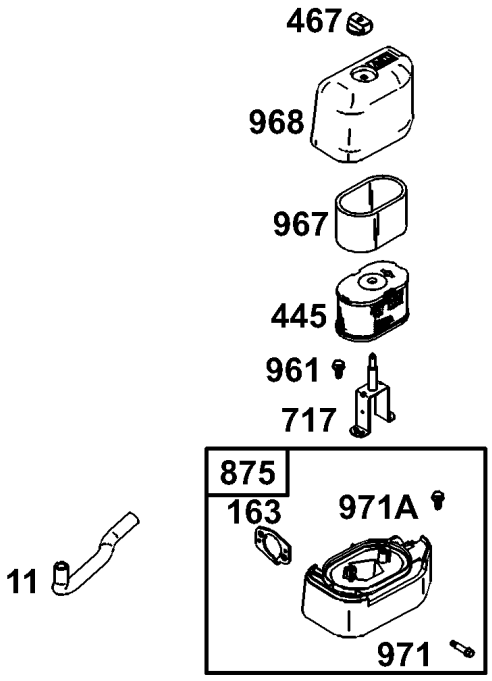

Assemblies include all parts shown in frames.

Air Cleaner Assembly
Engine Briggs and Stratton Model 126402-0245-E1

Ref	Part No.	Qty.	Description
❼11	693647	1	Breather Tube
❸❺163 ❻❼	696979	1	Air Cleaner Gasket
❼445	697029	1	Air Cleaner Cartridge Filter
❼467	691668	1	Air Cleaner Knob
❼717	693462	1	Air Cleaner Bracket
❼875	697030	1	Air Cleaner Base
❼961	693598	1	Screw (Air Cleaner Bracket)
❼967	273356	1	Pre–cleaner Filter
❼968	693460	1	Air Cleaner Cover
❼971	690349	1	Screw (Air Cleaner Base)
❼971A	691693	1	Screw (Oil Fill Bracket)

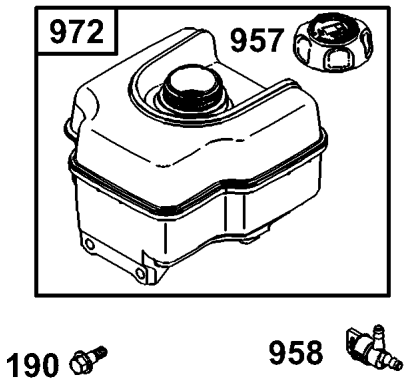

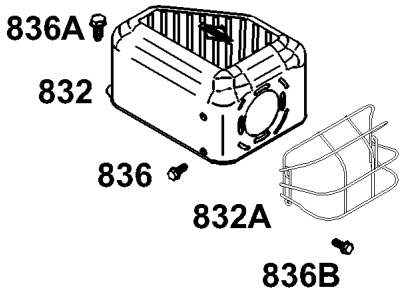

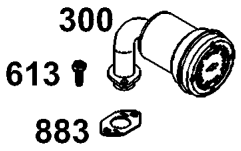

Assemblies include all parts shown in frames.

Muffler and Fuel Tank Assembly
Engine Briggs and Stratton Model 126402-0245-E1

Ref	Part No.	Qty.	Description
❼300	693593	1	Muffler
❼190	692127	1	Screw (Fuel Tank)
❼613	691665	1	Screw (Muffler)
❼832	693583	1	Muffler Guard
❼832A	696516	1	Muffler Guard
❼836	690661	1	Screw (Muffler Guard)
❼836A	693624	1	Screw (Muffler Guard)
❼836B	696519	1	Screw (Muffler Guard)
❸❼883	691893	1	Exhaust Gasket
❼957	694261	1	Fuel Tank Cap
❼958	692586	1	Fuel Shut Off Valve
❼972	694260	1	Fuel Tank

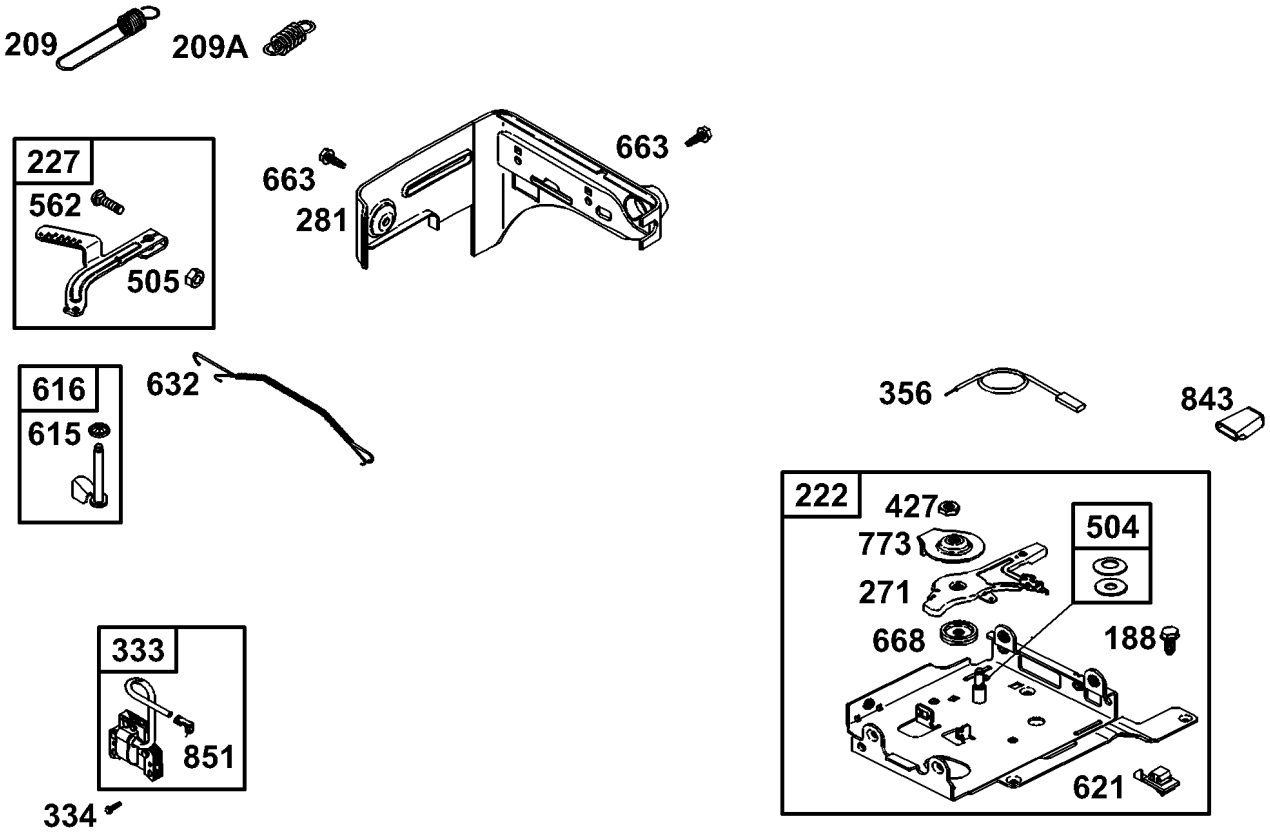

Assemblies include all parts shown in frames.

Governor Assembly
Engine Briggs and Stratton Model 126402-0245-E1

Ref	Part No.	Qty.	Description
❼188	690877	1	Screw (Control Bracket)
❼209	692571	1	Governor Spring
❼209A	691278	1	Governor Spring
❼222	694253	1	Control Bracket
❼227	692573	1	Governor Control Lever
❼281	694252	1	Control Panel
❼333	695711	1	Magneto Armature
❼334	691061	1	Screw (Magneto Armature)
❼505	691251	1	Nut (Governor Control Lever)
❼562	691112	1	Bolt (Governor Control Lever)
❼615	692576	1	Governor Shaft Retainer
❼616	692547	1	Governor Crank
❼632	693408	1	Mechanical Governor Spring/link
❼663	694593	1	Screw (Control Panel)
❼851	493880	1	Sparkplug Terminal

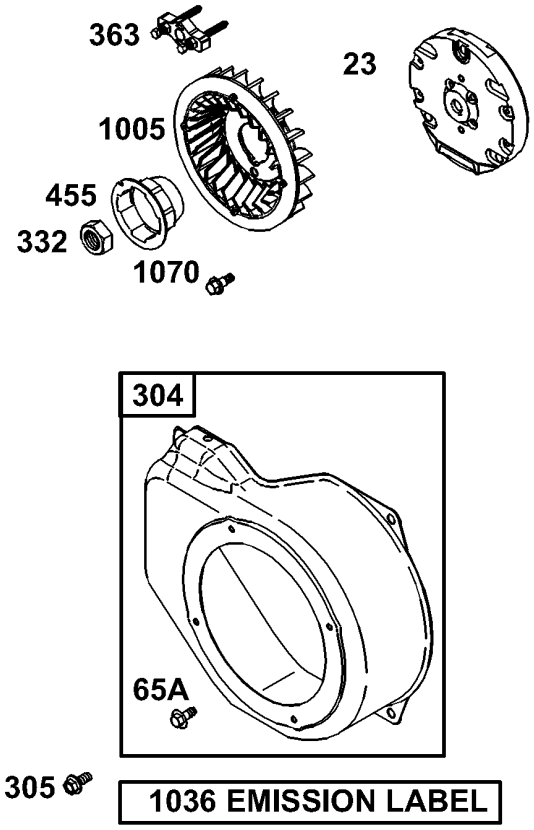

Assemblies include all parts shown in frames.

Blower Housing Assembly
Engine Briggs and Stratton Model 126402-0245-E1

Ref	Part No.	Qty.	Description
❼23	692987	1	Flywheel
❼65A	692608	1	Screw (Rewind Housing)
❼304	693621	1	Blower Housing
❼305	690960	1	Screw (Blower Housing)
❼332	690662	1	Nut (Flywheel Fan)
❼363	19069	1	Flywheel Puller
❼455	692591	1	Flywheel Cup
❼1005	692592	1	Flywheel Fan
❼1036	697004	1	Emission Label
❼1070	692590	1	Screw (Flywheel Fan)

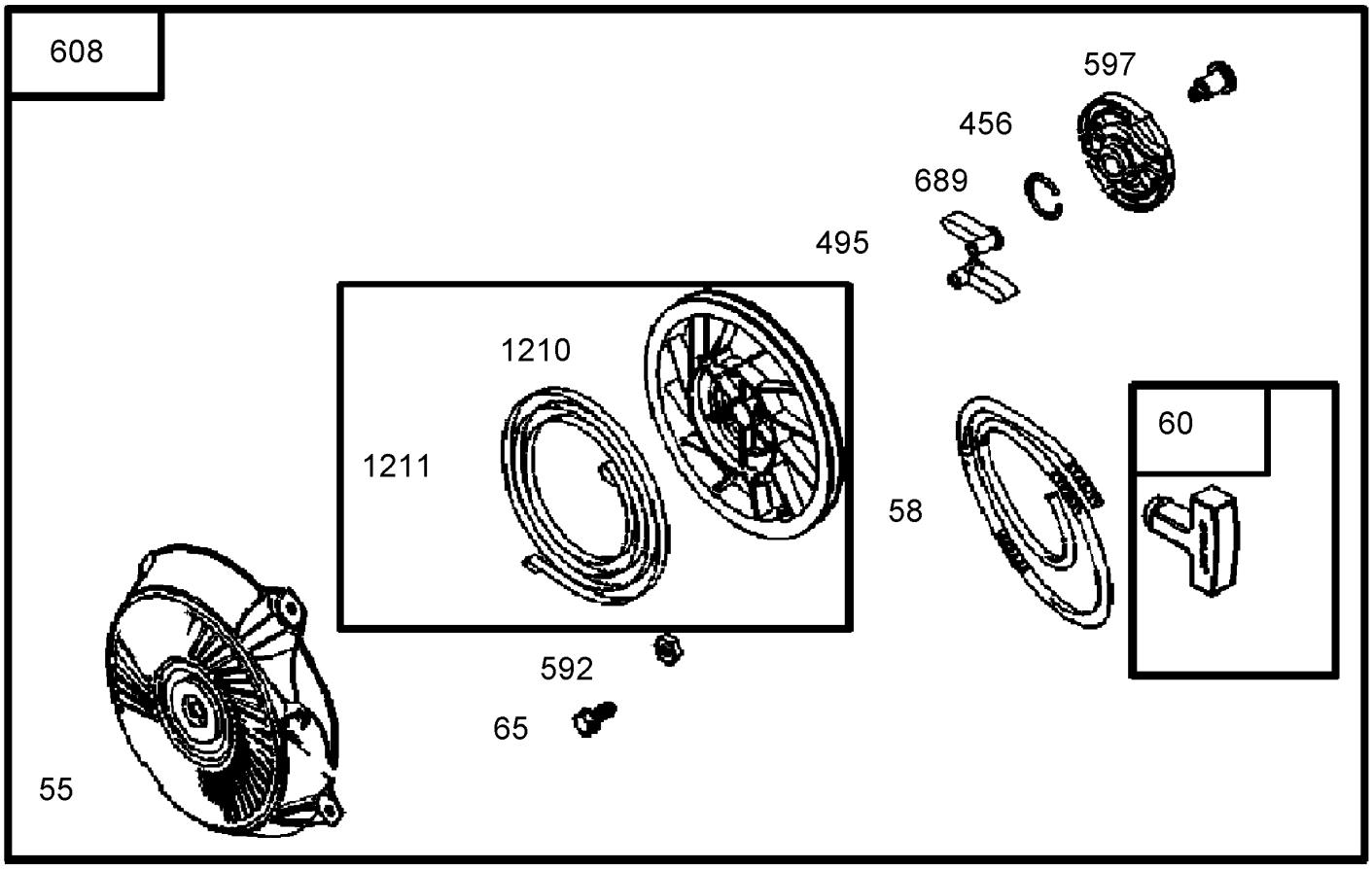

Starter Assembly
Engine Briggs and Stratton Model 126402-0245-E1

Ref	Part No.	Qty.	Description
❼55	691422	1	Rewind Starter Housing
❼58	693389	1	Starter Rope (Cut To Required Length)
❼59	805957	1	Grip Insert
❼60	715257	1	Starter Rope Grip
❼65	690837	1	Screw (Rewind Starter)
❼456	692299	1	Pawl Friction Plate
❼459	281505	1	Ratchet Pawl
❼592	690800	1	Nut (Rewind Starter)
❼597	691696	1	Screw (Pawl Friction Plate)
❼608	693394	1	Rewind Starter
❼689	691855	1	Friction Spring
❼1210	498144	1	Pulley/spring ASM
❼1211	498144	1	Pulley/spring ASM

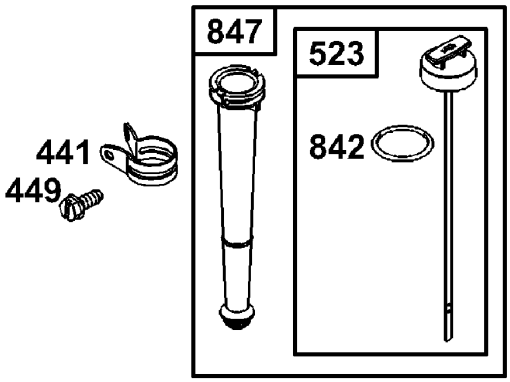

Oil Filter, Tube and Pump Assembly
Engine Briggs and Stratton Model 126402-0245-E1

Ref	Part No.	Qty.	Description
❼441	694262	1	Oil Fill Bracket
❼449	691693	1	Screw (Oil Fill Bracket)
❼523	693618	1	Dipstick
❼842	691031	1	O Ring Seal (Dipstick Tube)
❼847	693617	1	Dipstick/tube ASM

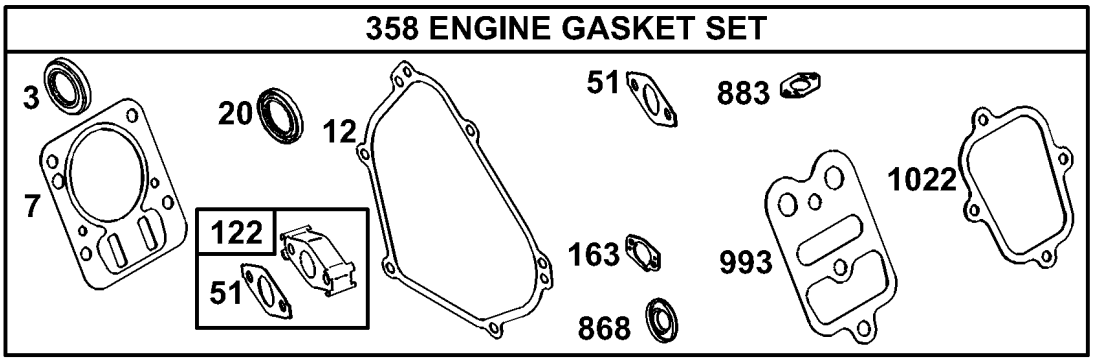

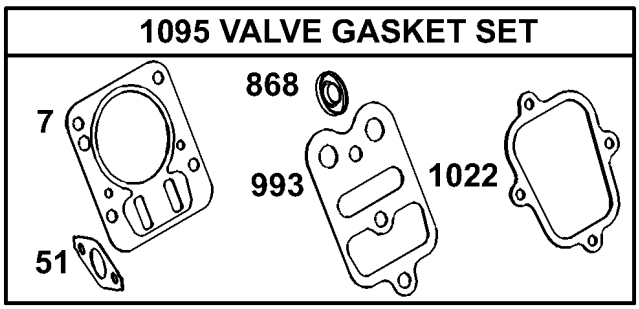

Assemblies include all parts shown in frames.

Gasket Assembly
Engine Briggs and Stratton Model 126402-0245-E1

Ref	Part No.	Qty.	Description
❸❼3	299819	1	Oil Seal (Magneto Side)
❸❹7 ❼	695166	1	Cylinder Head Gasket
❸❼12	692549	1	Crankcase Cover Gasket
❸❼20	692550	1	Oil Seal (Pto Side)
❸❹51 ❺❻	692555	1	Intake Gasket
❸❺122 ❼	693749	1	Carburetor Spacer
❸❺163 ❻❼	696979	1	Air Cleaner Gasket
❼358	697000	1	Engine Gasket Set
❸❹868 ❼	692044	1	Valve Seal
❸❼883	691893	1	Exhaust Gasket
❸❹993 ❼	694088	1	Cylinder Head Plate Gasket
❸❹1022 ❼	691890	1	Rocker Cover Gasket
❼1095	695289	1	Valve Gasket Set

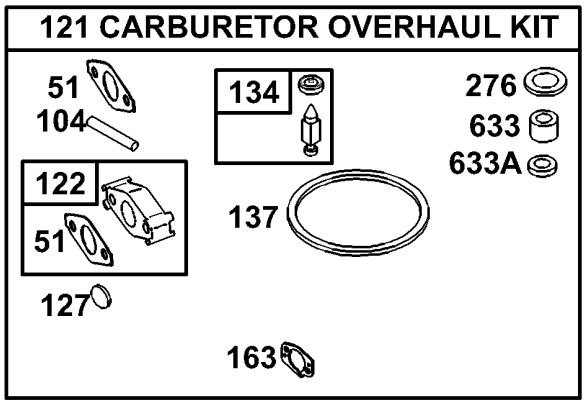

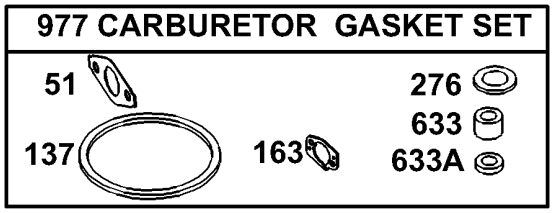

Assemblies include all parts shown in frames.

Carburetor Overhaul Kit Assembly
Engine Briggs and Stratton Model 126402-0245-E1

Ref	Part No.	Qty.	Description
❸❹51 ❺❻	692555	1	Intake Gasket
❺❼104	691242	1	Float Hinge Pin
❼121	696998	1	Carburetor Overhaul Kit
❸❺122 ❼	693749	1	Carburetor Spacer
❺❼127	691739	1	Welch Plug
❺❼134	398188	1	Needle/seat Kit
❺❻137 ❼	693981	1	Float Bowl Gasket
❸❺163 ❻❼	696979	1	Air Cleaner Gasket
❺❻276 ❼	271716	1	Sealing Washer
❺❻633 ❼	693867	1	Choke/throttle Shaft Seal
❺❻633A ❼	691321	1	Choke/throttle Shaft Seal
❼977	697001	1	Carburetor Gasket Set

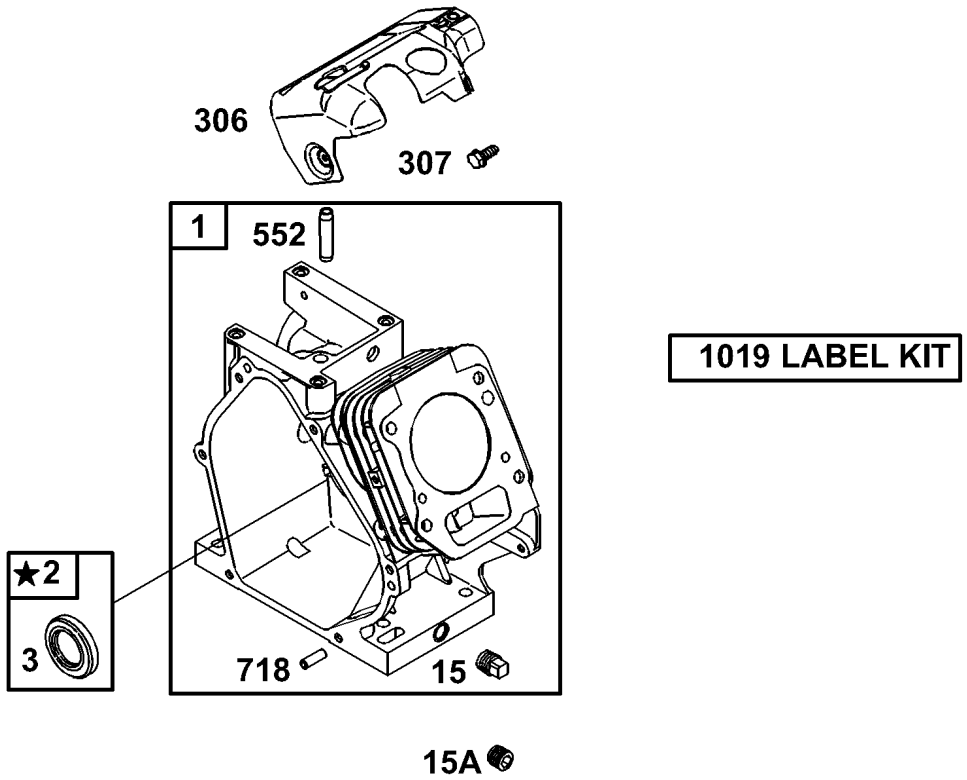

★ REQUIRES SPECIAL TOOLS TO INSTALL. SEE REPAIR INSTRUCTION MANUAL.

Assemblies include all parts shown in frames.

Cylinder Assembly
Engine Briggs and Stratton Model 126302-0245-E1

Ref	Part No.	Qty.	Description
❼1	699510	1	Cylinder ASM
❼2	399269	1	Bushing/seal Kit (Magneto Side)
❸❼3	299819	1	Oil Seal (Magneto Side)
❼15	691686	1	Oil Drain Plug (Square Head)
❼15A	691682	1	Oil Drain Plug (Flush)
❼306	693610	1	Cylinder Shield
❼307	699483	1	Screw (Cylinder Shield)
❼552	692346	1	Governor Crank Bushing
❼718	690959	1	Locating Pin
❼1019	694852	1	Label Kit

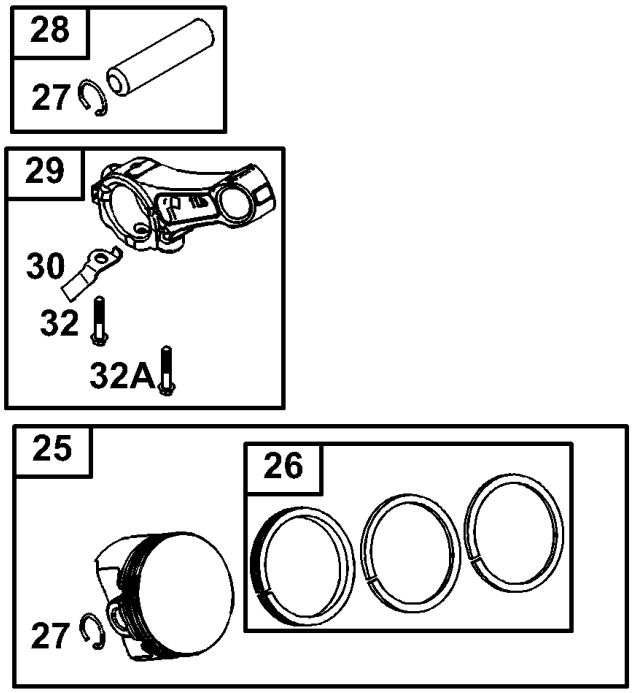

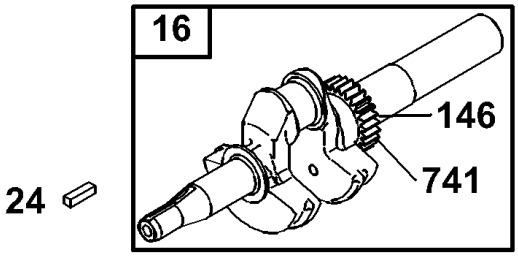

Assemblies include all parts shown in frames.

Crankshaft Assembly
Engine Briggs and Stratton Model 126302-0245-E1

Ref	Part No.	Qty.	Description
❼16	699452	1	Crankshaft
❼24	222698	1	Flywheel Key
❼25	690021	1	Piston Assembly (Standard)
❼	694168	1	Piston Assembly (.020in Oversize)
❼26	499631	1	Ring Set (Standard)
❼	692786	1	Ring Set (.020in Oversize)
❼27	691866	1	Piston Pin Lock
❼28	499423	1	Piston Pin
❼29	690124	1	Connecting Rod
❼30	692562	1	Connecting Rod Dipper
❼32	691664	1	Screw (Connecting Rod)
❼32A	695759	1	Screw (Connecting Rod)
❼146	690979	1	Timing Key
❼741	695087	1	Timing Gear

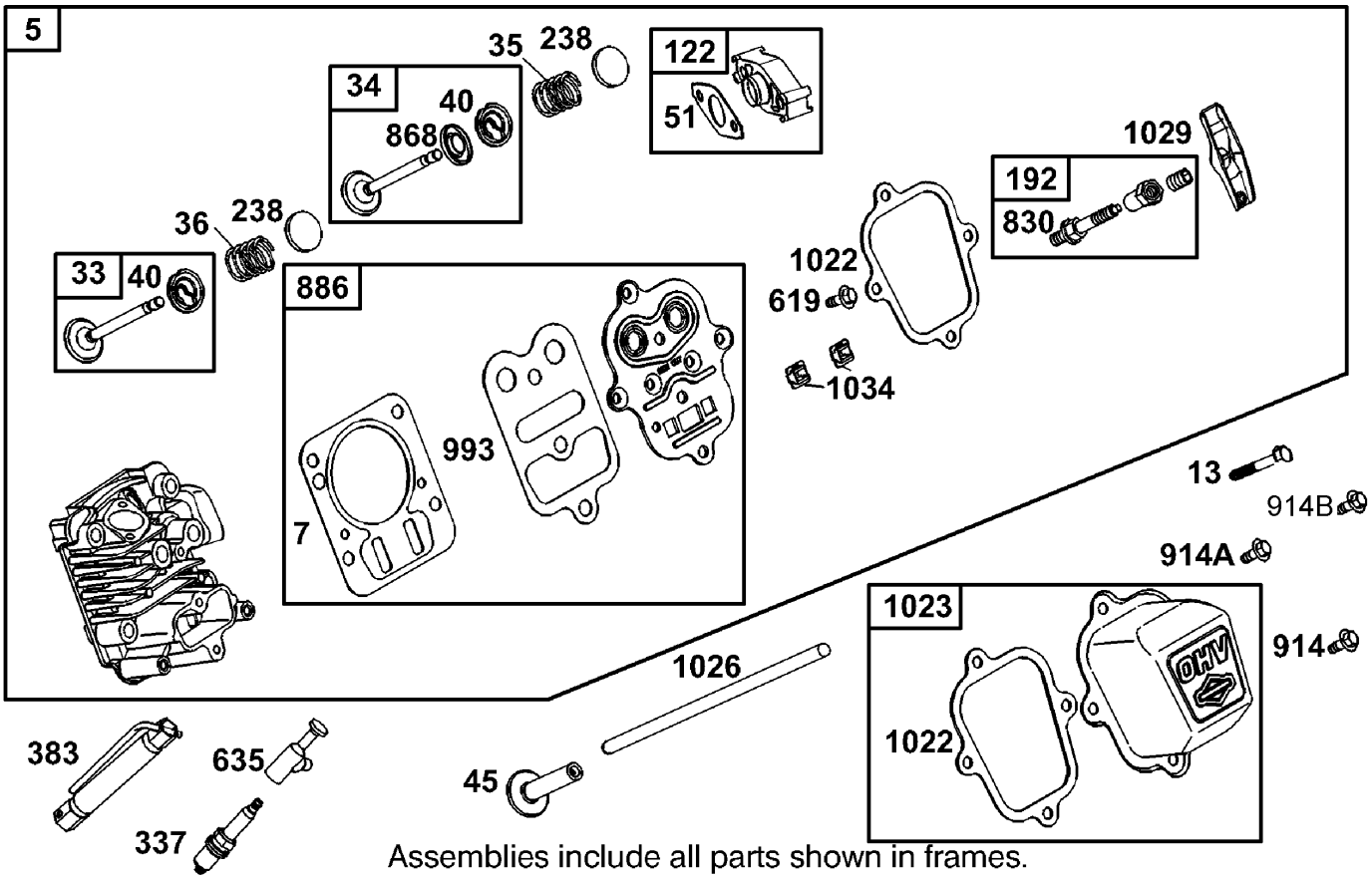

Assemblies include all parts shown in frames.

Cylinder Head Assembly
Engine Briggs and Stratton Model 126302-0245-E1

Ref	Part No.	Qty.	Description
❼5	699486	1	Cylinder Head
❸❹7 ❼	698210	1	Cylinder Head Gasket
❼13	699482	1	Screw (Cylinder Head)
❼33	499642	1	Exhaust Valve
❼34	499641	1	Intake Valve
❼35	691304	1	Valve Spring (Exhaust)
❼36	691304	1	Valve Spring (Exhaust)
❼40	692194	1	Valve Retainer
❼45	690977	1	Valve Tappet
❸❹51 ❺❻	692555	1	Intake Gasket
❷❺122 ❼	693749	1	Carburetor Spacer
❼192	694543	1	Rocker Arm Adjuster
❼238	691300	1	Valve Cap
❼337	691043	1	Spark Plug
❼383	19374	1	Spark Plug Wrench
❼619	699230	1	Screw (Cylinder Head Plate)
❼635	692076	1	Spark Plug Boot
❼830	694544	1	Rocker Arm Stud
❸❹868 ❼	692044	1	Valve Seal
❼886	696268	1	Cylinder Head/plate Gasket Kit
❼914	699481	1	Screw (Rocker Cover) (Bottom)

Ref	Part No.	Qty.	Description
❼914A	692557	1	Screw (Rocker Cover) (Top)
❼914B	697551	1	Screw (Rocker Cover) (Side)
❸❹993 ❼	694088	1	Cylinder Head Plate Gasket
❸❹1022 ❼	691890	1	Rocker Cover Gasket
❼1023	499924	1	Rocker Cover
❼1026	790287	1	Push Rod
❼1029	691230	1	Rocker Arm
❼1034	691343	1	Push Rod Guide

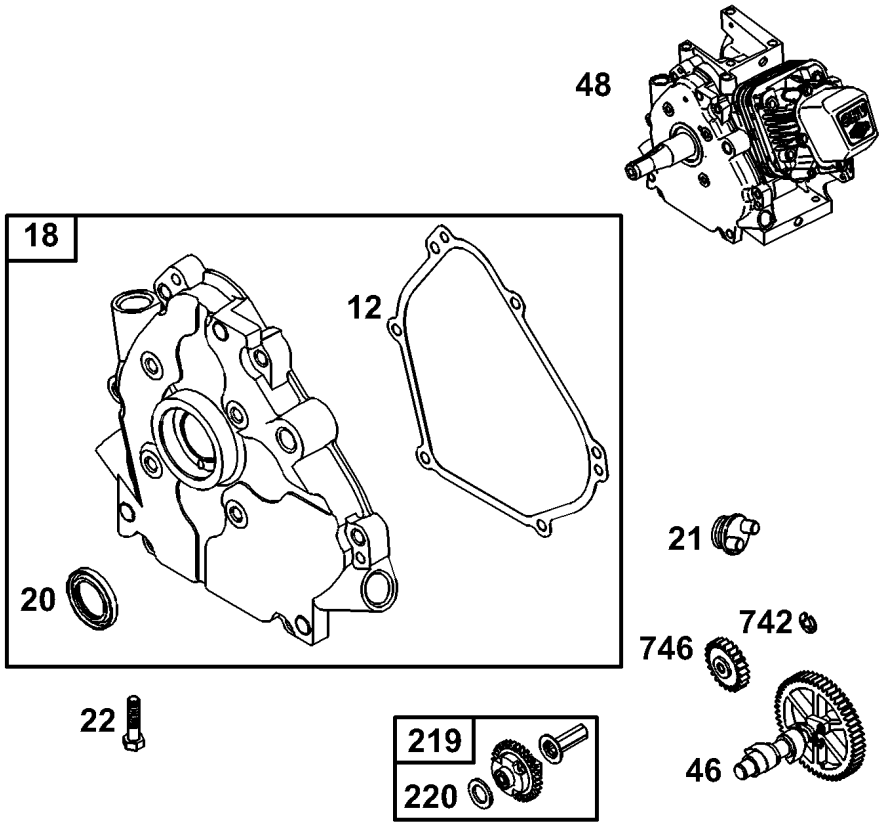

Assemblies include all parts shown in frames.

Crankcase Assembly
Engine Briggs and Stratton Model 126302-0245-E1

Ref	Part No.	Qty.	Description
❸❼12	699485	1	Crankcase Cover Gasket
❼18	699696	1	Crankcase Cover
❸❼20	692550	1	Oil Seal (Pto Side)
❼21	281658	1	Oil Fill Cap
❼22	69478	1	Screw (Crankcase Cover/sump)
❼46	693404	1	Camshaft
❼48		1	Short Block (Not Available At This Time)
❼219	693578	1	Governor Gear
❼220	691724	1	Washer (Governor Gear)
❼742	692564	1	E–ring Retainer
❼746	692566	1	Idler Gear

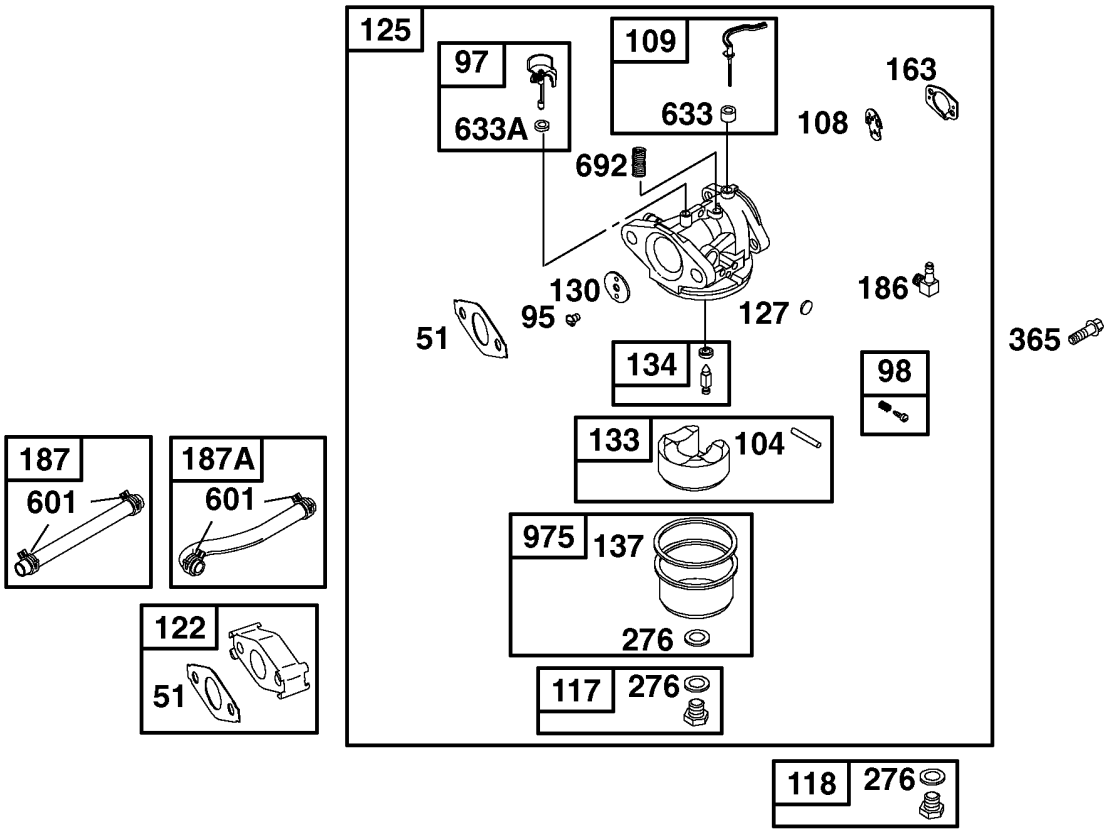

Assemblies include all parts shown in frames.

Carburetor Assembly
Engine Briggs and Stratton Model 126302-0245-E1

Ref	Part No.	Qty.	Description
❸❹51 ❺❻	692555	1	Intake Gasket
❼95	691636	1	Screw (Throttle Valve)
❼97	690024	1	Throttle Shaft
❼98	398185	1	Idle Speed Kit
❺❼104	691242	1	Float Hinge Pin
❼108	692567	1	Choke Valve
❼109	693628	1	Choke Shaft
❼117	697355	1	Main Jet (Standard)
❼118	494870	1	Main Jet (High Altitude)
❸❺122 ❼	693749	1	Carburetor Spacer
❼125	697028	1	Carburetor
❺❼127	691739	1	Welch Plug
❼130	691181	1	Throttle Valve
❼133	398187	1	Carburetor Float
❺❼134	398188	1	Needle/seat Kit
❺❻137 ❼	693981	1	Float Bowl Gasket
❸❺163 ❻❼	696979	1	Air Cleaner Gasket
❼186	692317	1	Hose Connector
❼187	691050	1	Fuel Line (Cut To Required Length)
❼187A	187A	1	Line–fuel (Molded)

Ref	Part No.	Qty.	Description
❺❻276 ❼	271716	1	Sealing Washer
❼365	365	1	Screw (Carburetor)
❼601	601	1	Hose Clamp
❺❻633 ❼	693867	1	Choke/throttle Shaft Seal
❺❻633A ❼	691321	1	Choke/throttle Shaft Seal
❼692	692	1	Detent Spring
❼975	975	1	Float Bowl

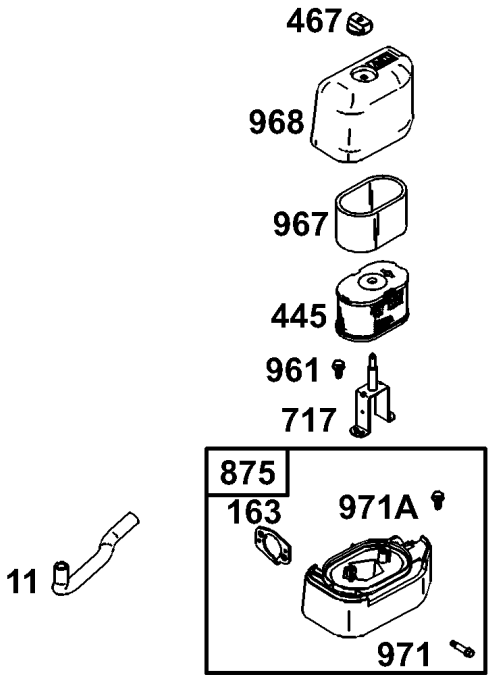

Assemblies include all parts shown in frames.

Air Cleaner Assembly
Engine Briggs and Stratton Model 126302-0245-E1

Ref	Part No.	Qty.	Description
❼11	693647	1	Breather Tube
❸❺163 ❻❼	696979	1	Air Cleaner Gasket
❼445	697029	1	Air Cleaner Cartridge Filter
❼467	691668	1	Air Cleaner Knob
❼717	693462	1	Air Cleaner Bracket
❼875	697030	1	Air Cleaner Base
❼961	698304	1	Screw (Air Cleaner Bracket)
❼967	273356	1	Pre–cleaner Filter
❼968	693460	1	Air Cleaner Cover
❼971	690349	1	Screw (Air Cleaner Base)
❼971A	691693	1	Screw (Oil Fill Bracket)

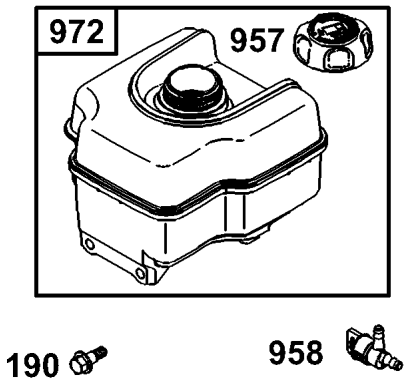

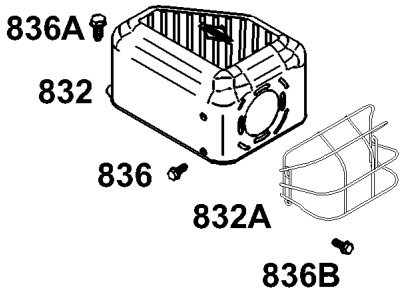

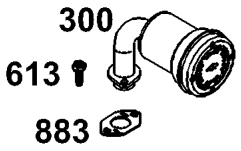

Assemblies include all parts shown in frames.

Muffler and Fuel Tank Assembly
Engine Briggs and Stratton Model 126302-0245-E1

Ref	Part No.	Qty.	Description
❼300	693593	1	Muffler
❼190	699220	1	Screw (Fuel Tank)
❼613	699209	1	Screw (Muffler)
❼832	693583	1	Muffler Guard
❼832A	696516	1	Muffler Guard
❼836	699204	1	Screw (Muffler Guard)
❼836A	699632	1	Screw (Muffler Guard)
❼836B	699203	1	Screw (Muffler Guard)
❸❼883	691893	1	Exhaust Gasket
❼957	694261	1	Fuel Tank Cap
❼958	698180	1	Fuel Shut–off Valve
❼972	694260	1	Fuel Tank

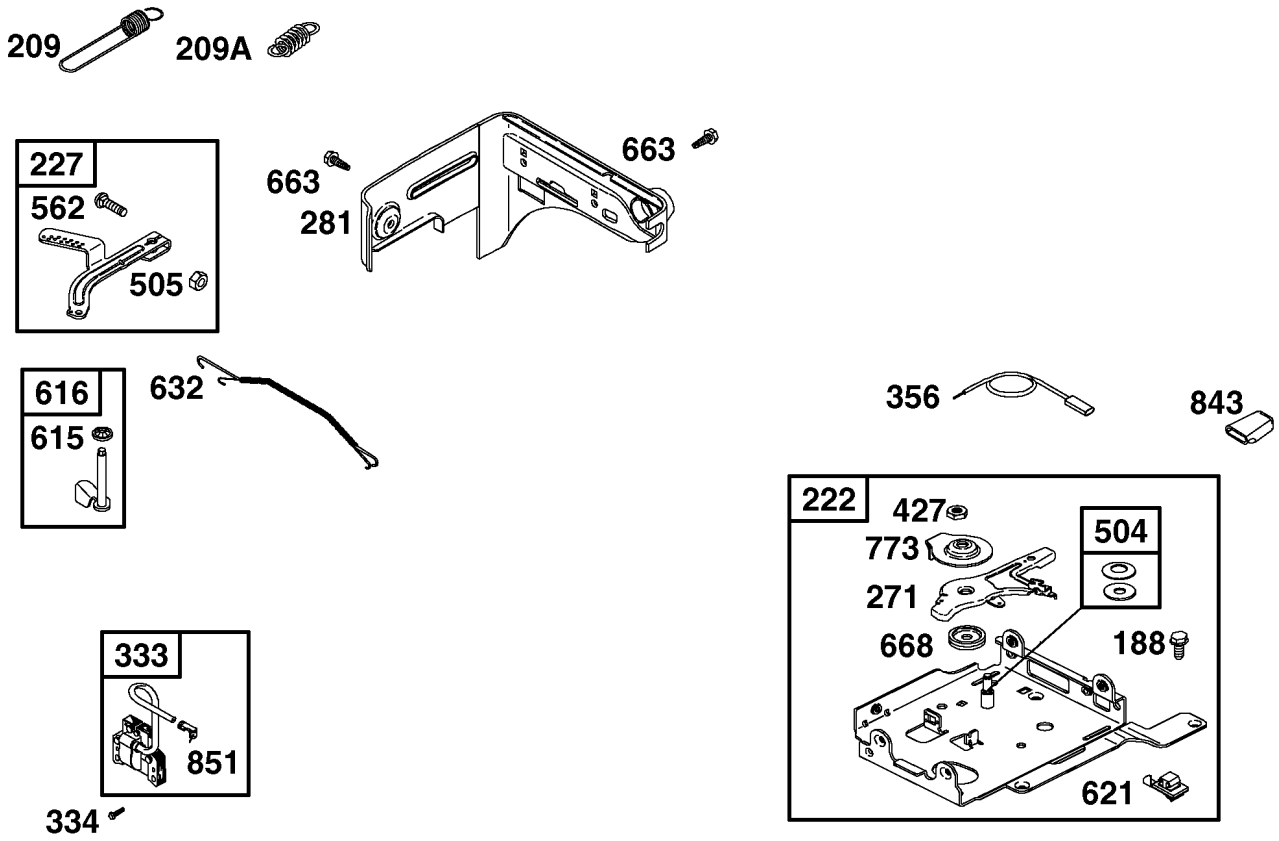

Assemblies include all parts shown in frames.

Governor Assembly
Engine Briggs and Stratton Model 126302-0245-E1

Ref	Part No.	Qty.	Description
❼188	699479	1	Screw (Control Bracket)
❼209	692571	1	Governor Spring
❼209A	691278	1	Governor Spring
❼222	699589	1	Control Bracket
❼227	692573	1	Governor Control Lever
❼271	694256	1	Control Lever
❼281	699639	1	Control Panel
❼333	695711	1	Magneto Armature
❼334	699477	1	Screw (Magneto Armature)
❼356	692390	1	Stop Wire
❼427	694255	1	Nut (Control Bracket)
❼504	694254	1	Friction Washer Set
❼505	691251	1	Nut (Governor Control Lever)
❼562	691112	1	Bolt (Governor Control Lever)
❼615	692576	1	Governor Shaft Retainer
❼616	616	1	Governor Crank
❼621	621	1	Stop Switch
❼632	632	1	Mechanical Governor Spring/link
❼663	663	1	Screw (Control Panel)
❼668	668	1	Spacer (Control Bracket)
❼773	773	1	Retainer
❼843	843	1	Lever Sleeve
❼851	851	1	Spark Plug Terminal

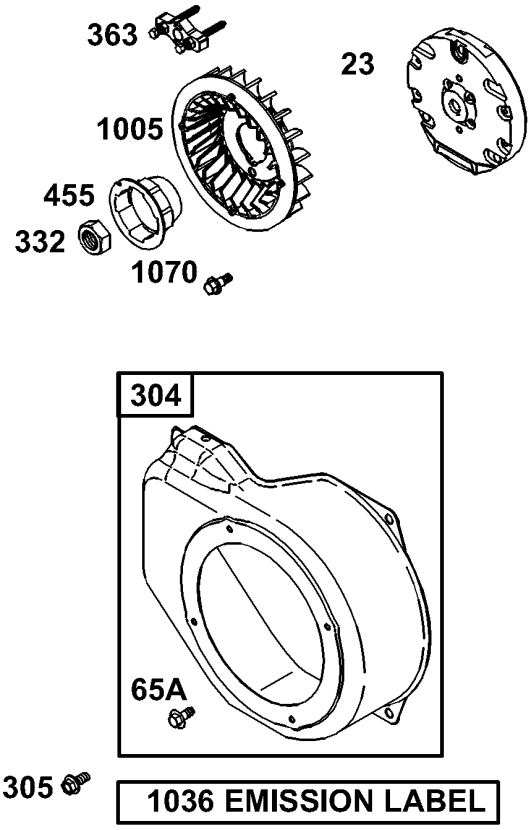

Assemblies include all parts shown in frames.

Blower Housing Assembly
Engine Briggs and Stratton Model 126302-0245-E1

Ref	Part No.	Qty.	Description
❼23	699488	1	Flywheel
❼65A	699228	1	Screw (Rewind Housing)
❼304	699598	1	Blower Housing
❼305	699480	1	Screw (Blower Housing)
❼332	699359	1	Nut (Flywheel Fan)
❼363	19069	1	Flywheel Puller
❼455	692591	1	Flywheel Cup
❼1005	692592	1	Flywheel Fan
❼1036	699946	1	Emissions Label
❼1070	699201	1	Screw (Flywheel Fan)

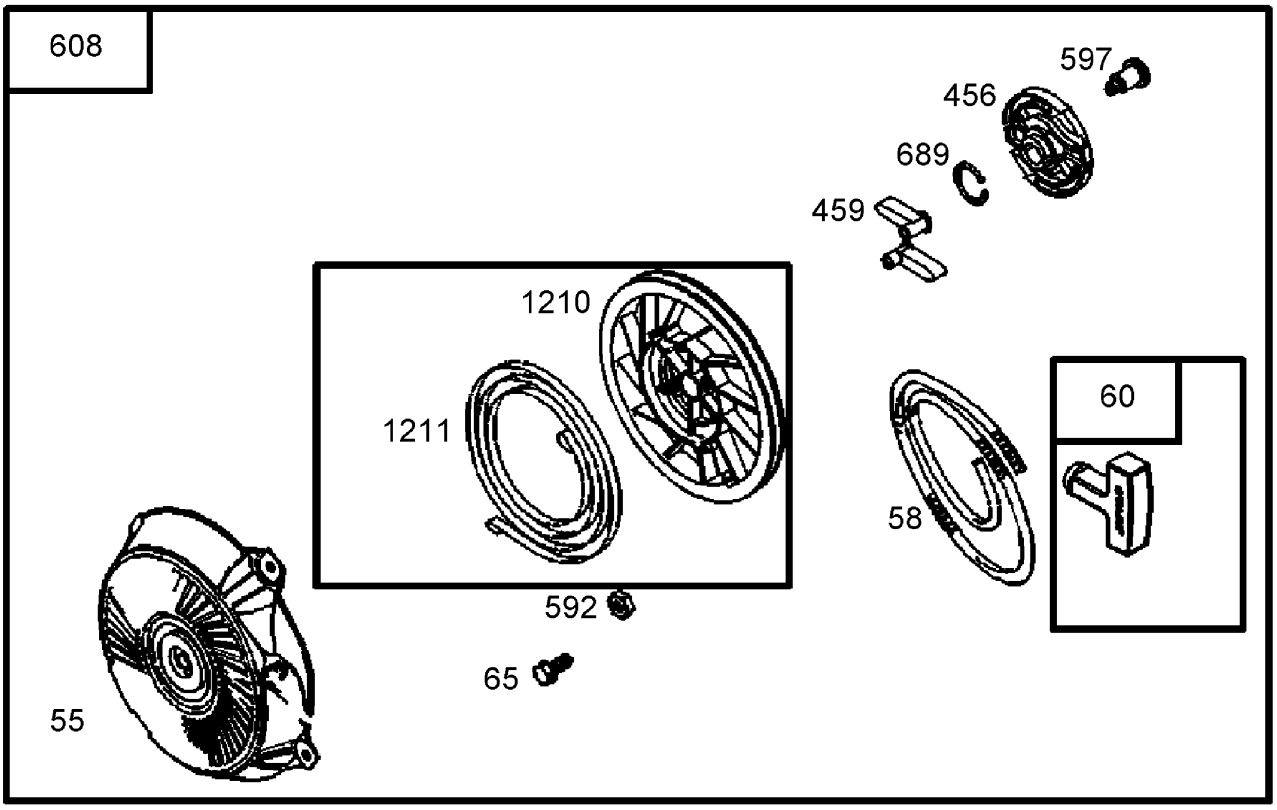

Starter Assembly
Engine Briggs and Stratton Model 126302-0245-E1

Ref	Part No.	Qty.	Description
❼55	691422	1	Rewind Starter Housing
❼58	693389	1	Starter Rope (Cut To Required Length)
❼60	691915	1	Starter Rope Grip
❼65	690837	1	Screw (Rewind Starter)
❼456	692299	1	Pawl Friction Plate
❼459	281505	1	Ratchet Pawl
❼592	690800	1	Nut (Rewind Starter)
❼597	691696	1	Screw (Pawl Friction Plate)
❼608	497830	1	Rewind Starter
❼689	691855	1	Friction Spring
❼1210	498144	1	Pulley/spring ASM
❼1211	498144	1	Pulley/spring ASM

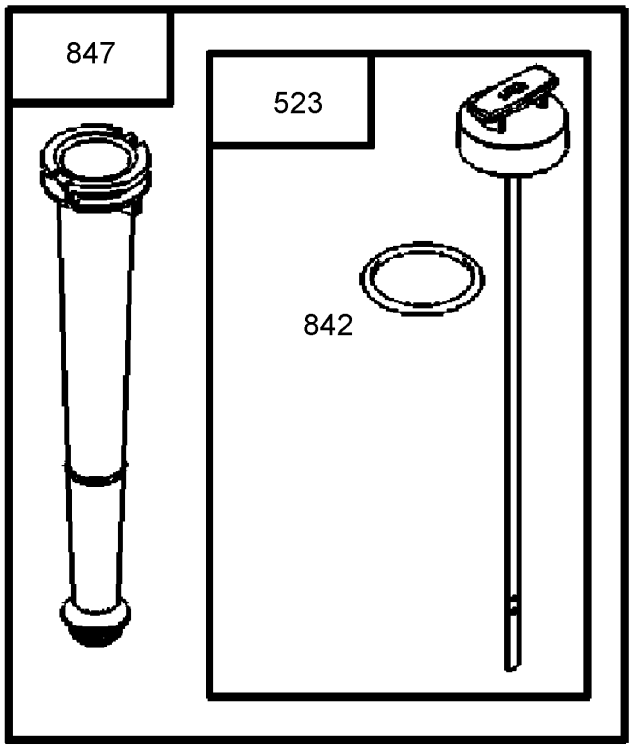

Oil Tube and Dipstick Assembly
Engine Briggs and Stratton Model 126302-0245-E1

Ref	Part No.	Qty.	Description
❼523	693618	1	Dipstick
❼842	691031	1	O Ring Seal (Dipstick Tube)
❼847	693617	1	Dipstick/tube ASM

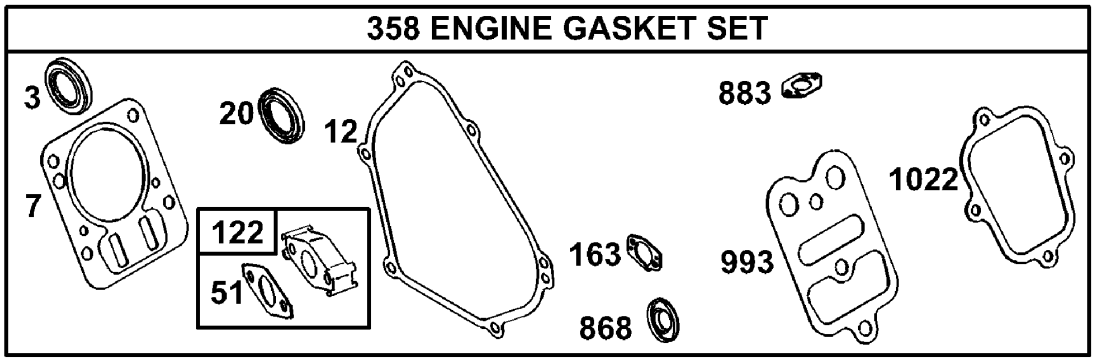

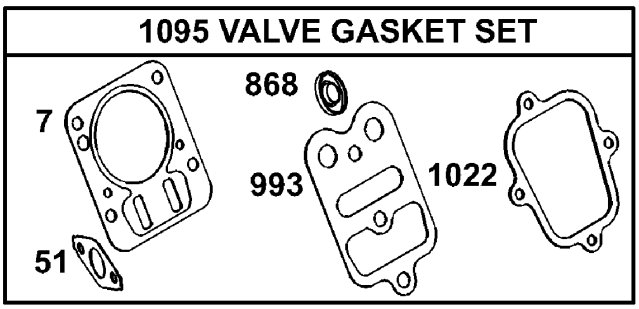

Assemblies include all parts shown in frames.

Gasket Assembly
Engine Briggs and Stratton Model 126302-0245-E1

Ref	Part No.	Qty.	Description
❸❼3	299819	1	Oil Seal (Magneto Side)
❸❹7 ❼	695166	1	Cylinder Head Gasket
❸❼12	692549	1	Crankcase Cover Gasket
❸❼20	692550	1	Oil Seal (Pto Side)
❸❹51 ❺❻	692555	1	Intake Gasket
❸❺122 ❼	693749	1	Carburetor Spacer
❸❺163 ❻❼	696979	1	Air Cleaner Gasket
❼358	699638	1	Engine Gasket Set
❸❹868 ❼	692044	1	Valve Seal
❸❼883	691893	1	Exhaust Gasket
❸❹993 ❼	694088	1	Cylinder Head Plate Gasket
❸❹1022 ❼	691890	1	Rocker Cover Gasket
❼1095	698215	1	Valve Gasket Set

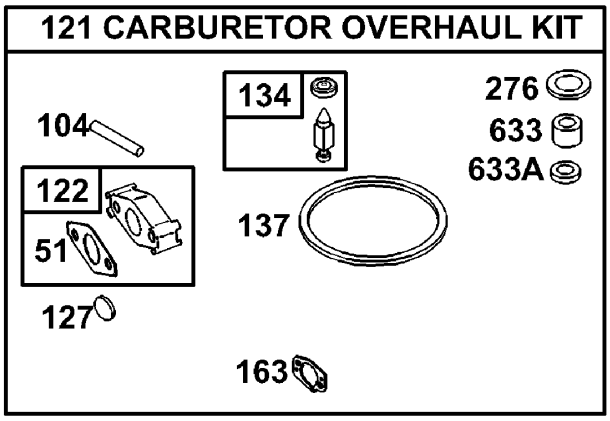

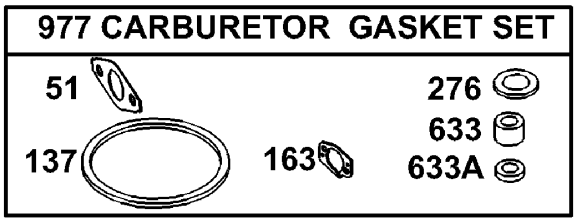

Assemblies include all parts shown in frames.

Carburetor Overhaul Kit Assembly

Engine Briggs and Stratton Model 126302-0245-E1

Ref	Part No.	Qty.	Description
❸❹51 ❺❻	692555	1	Intake Gasket
❺❼104	691242	1	Float Hinge Pin
❼121	696998	1	Carburetor Overhaul Kit
❸❺122 ❼	693749	1	Carburetor Spacer
❺❼127	691739	1	Welch Plug
❺❼134	398188	1	Needle/seat Kit
❺❻137 ❼	693981	1	Float Bowl Gasket
❸❺163 ❻❼	696979	1	Air Cleaner Gasket
❺❻276 ❼	271716	1	Sealing Washer
❺❻633 ❼	693867	1	Choke/throttle Shaft Seal
❺❻633A ❼	691321	1	Choke/throttle Shaft Seal
❼977	697001	1	Carburetor Gasket Set


TORO®