Form No. 3471-293 Rev B

TORO®

Count on it.

Operator's Manual

Groundsmaster® 4000 or 4100 Rotary Mower

Model No. 30608—Serial No. 418200000 and Up
Model No. 30644—Serial No. 418200000 and Up

Register at www.Toro.com.
Original Instructions (EN)

CE UK CA

3471-293

This product complies with all relevant European directives; for details please see the separate product specific Declaration of Conformity (DOC) sheet.

It is a violation of California Public Resource Code Section 4442 or 4443 to use or operate the engine on any forest-covered, brush-covered, or grass-covered land unless the engine is equipped with a spark arrester, as defined in Section 4442, maintained in effective working order or the engine is constructed, equipped, and maintained for the prevention of fire.

The enclosed engine owner's manual is supplied for information regarding the US Environmental Protection Agency (EPA) and the California Emission Control Regulation of emission systems, maintenance, and warranty. Replacements may be ordered through the engine manufacturer.

If this machine is equipped with a telematics device, refer to your authorized Toro distributor for instructions to activate the device.

Electromagnetic Compatibility Certification

Domestic: This device complies with FCC Rules Part 15. Operation is subject to the following two conditions: (1) This device may not cause harmful interference and (2) this device must accept any interference that may be received, including interference that may cause undesirable operation.

FCC ID: APV-3640LB

IC: 5843C-3640LB

This equipment has been tested and found to comply within the limits for a Class B digital device, pursuant to part 15 of the FCC Rules. These limits are designed to provide reasonable protection against harmful interference in a residential installation. This equipment generates, uses, and can radiate radio frequency energy and, if not installed and used in accordance with the instructions, may cause harmful interference to radio communications. However, there is no guarantee that interference will not occur in a particular installation. If this equipment does cause harmful interference to radio or television reception, which can be determined by turning the equipment off and on, the user is encouraged to try to connect the interference by one or more of the following measures:

- Reorient or relocate the receiving antenna.
- Increase the separation between the equipment and receiver.
- Connect the equipment into an outlet on a circuit different from that to which the receiver is connected.
- Consult the dealer or an experienced radio/TV technician for help.

Argentina

H-31397

Australia

Morocco

AGREE PAR L'ANRT MAROC

Numero d'agrement: MR00004789ANRT20024

Delivre d'agrement: 11/4/2024

New Zealand

R-NZ

South Korea

R-R-Tor-HMU3640LB

⚠ WARNING

CALIFORNIA
Proposition 65 Warning

Diesel engine exhaust and some of its constituents are known to the State of California to cause cancer, birth defects, and other reproductive harm.

Battery posts, terminals, and related accessories contain lead and lead compounds, chemicals known to the State of California to cause cancer and reproductive harm. Wash hands after handling.

Use of this product may cause exposure to chemicals known to the State of California to cause cancer, birth defects, or other reproductive harm.

© 2025—The Toro® Company
8111 Lyndale Avenue South
Bloomington, MN 55420

Contact us at www.Toro.com.
Printed in the USA
All Rights Reserved

Introduction

This machine is a multi-purpose machine intended to be used by professional, hired operators in commercial applications. It is designed primarily for mowing grass on well-maintained lawns in parks, golf courses, sports fields, and on commercial grounds. Using this product for purposes other than its intended use could prove dangerous to you and bystanders.

Read this information carefully to learn how to operate and maintain your product properly and to avoid injury and product damage. You are responsible for operating the product properly and safely.

Visit www.Toro.com for product safety and operation training materials, accessory information, help finding a dealer, or to register your product.

Whenever you need service, genuine Toro parts, or additional information, contact an Authorized Service Dealer or Toro Customer Service and have the model and serial numbers of your product ready. Figure 1 identifies the location of the model and serial numbers on the product. Write the numbers in the space provided.

Important: **With your mobile device, you can scan the QR code on the serial number decal (if equipped) to access warranty, parts, and other product information.**

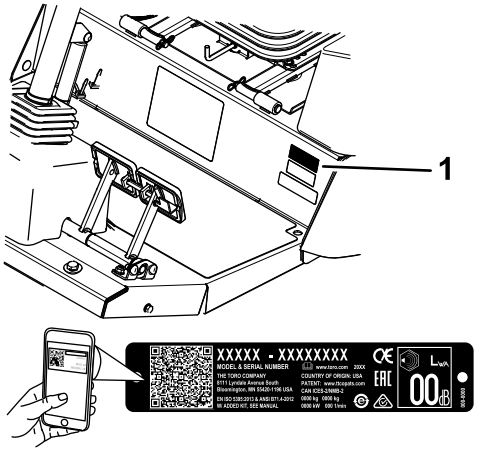

g243944

Figure 1

1. Model and serial number location

Model No.	
Serial No.	

Safety-Alert Symbol

The safety-alert symbol (Figure 2) shown in this manual and on the machine identifies important safety messages that you must follow to prevent accidents.



g000502

Figure 2

Safety-alert symbol

The safety-alert symbol appears above information that alerts you to unsafe actions or situations and is followed by the word **DANGER**, **WARNING**, or **CAUTION**.

DANGER indicates an imminently hazardous situation which, if not avoided, **will** result in death or serious injury.

WARNING indicates a potentially hazardous situation which, if not avoided, **could** result in death or serious injury.

CAUTION indicates a potentially hazardous situation which, if not avoided, **may** result in minor or moderate injury.

This manual uses two other words to highlight information. **Important** calls attention to special mechanical information and **Note** emphasizes general information worthy of special attention.

Contents

Safety-Alert Symbol ... 3
Safety ... 5
General Safety ... 5
Safety and Instructional Decals ... 5
Setup ... 16
1 Greasing the Machine ... 16
2 Checking the Tire Pressure ... 16
3 Checking the Fluid Levels ... 17
4 Installing the Decal (CE Machines Only) ... 17
Product Overview ... 18
Controls ... 18
Cab Controls ... 20
Specifications ... 22
Attachments/Accessories ... 23
Before Operation ... 24
General Safety ... 24
Fuel Safety ... 24
Checking the Engine-Oil Level ... 24
Checking the Cooling System ... 24
Checking the Hydraulic System ... 24
Draining the Water Separator ... 24
Filling the Fuel Tank ... 24
Checking the Tire Pressure ... 25
Checking the Torque of the Wheel Lug Nuts ... 26
Adjusting the Mirrors ... 26
Aiming the Headlights ... 27
Adjusting the Rollover Protection System (ROPS) ... 27
Adjusting the Height of Cut ... 29
Adjusting the Skids ... 31
Adjusting the Mower-Deck Rollers ... 31
Adjusting the Blade ... 32
Correcting a Mismatch Between the Cutting Units ... 32
Checking the Safety-Interlock Switches ... 34
Selecting a Blade ... 35
Overview of the InfoCenter Display ... 35
Using the Menus ... 36
Protected Menus ... 37
Understanding the Diagnostic Light ... 39
During Operation ... 39
During Operation Safety ... 39
Understanding the Operating Characteristics of the Machine ... 41
Operating the Machine ... 41
Understanding Counterbalance ... 41
Using the Brake Pedals ... 42
Understanding Toro Smart Power™ ... 42
Performing a Fan-Reverse Operation ... 42
Understanding Auto Idle ... 42
Using the Cruise Control ... 42
Starting the Engine ... 42
Shutting Off the Engine ... 43
Using the Engine-Speed Switch ... 43
Adjusting the Mowing Speed ... 43
Adjusting the Transport Speed ... 43
Understanding the Diesel-Particulate Filter and Regeneration ... 44
Operating Tips ... 48
After Operation ... 49
General Safety ... 49
Pushing or Towing the Machine ... 49
Locating the Jacking Points ... 50
Hauling the Machine ... 50
Locating the Tie-Down Points ... 50
Maintenance ... 51
Maintenance Safety ... 51
Recommended Maintenance Schedule(s) ... 51
Daily Maintenance Checklist ... 53
Pre-Maintenance Procedures ... 54
Opening the Hood ... 54
Removing the Hood ... 54
Lubrication ... 55
Greasing the Bearings and Bushings ... 55
Engine Maintenance ... 58
Engine Safety ... 58
Servicing the Engine Oil ... 58
Servicing the Air Cleaner ... 59
Servicing the Diesel-Oxidation Catalyst (DOC) and the Soot Filter ... 61
Fuel System Maintenance ... 62
Servicing the Fuel System ... 62
Servicing the Water Separator ... 62
Servicing the Fuel Filter ... 62
Priming the Fuel System ... 63
Electrical System Maintenance ... 63
Electrical System Safety ... 63
Servicing the Battery ... 63
Locating the Fuses ... 64
Drive System Maintenance ... 65
Adjusting the Traction-Pedal Angle ... 65
Checking the Planetary-Gear-Drive Oil ... 65
Changing the Planetary-Gear-Drive Oil ... 66
Checking the Rear-Axle Lubricant ... 66
Checking the Rear-Axle-Gearbox Lubricant ... 67
Changing the Rear-Axle Lubricant ... 67
Checking the Rear Wheel Toe-In ... 68
Changing the Front Tires ... 68
Cooling System Maintenance ... 68
Cooling System Safety ... 68
Coolant Specification ... 69
Checking the Cooling System ... 69
Servicing the Engine-Cooling System ... 69
Brake Maintenance ... 70
Adjusting the Service Brakes ... 70
Belt Maintenance ... 71
Servicing the Alternator Belt ... 71
Servicing the Air Conditioner Compressor Belt ... 71

Tensioning the Blade-Drive Belts 71
Replacing the Blade-Drive Belt 72
Hydraulic System Maintenance 73
Hydraulic System Safety..... 73
Servicing the Hydraulic System 73
Cutting Unit Maintenance 76
Pivoting (Tilting) the Center Cutting Unit to the Upright Position..... 76
Pivoting the Center Cutting Unit Down 77
Adjusting the Cutting-Unit Pitch 77
Servicing the Caster-Arm Bushings 78
Servicing the Caster Wheels and Bearings..... 79
Replacing the Cutting Unit Hinge Covers 79
Blade Maintenance 80
Blade Safety 80
Checking for a Bent Blade 80
Removing and Installing the Cutting-Unit Blade(s) 80
Inspecting and Sharpening the Cutting Unit Blade(s) 81
Correcting a Cutting Unit Mismatch..... 82
Cab Maintenance 82
Cleaning the Cab 82
Cleaning the Cab Air Filters 82
Cleaning the Cab Pre-Filter 83
Cleaning the Air-Conditioning Coil 83
Storage 84
Storage Safety..... 84
Preparing the Machine for Storage 84

Safety

General Safety

This product is capable of amputating hands and feet and of throwing objects. Always follow all safety instructions to avoid serious personal injury.

- Read and understand the contents of this *Operator's Manual* before starting the engine.
- Use your full attention while operating the machine. Do not engage in any activity that causes distractions; otherwise, injury or property damage may occur.
- Do not operate the machine without all guards and other safety protective devices in place and functioning properly on the machine.
- Keep your hands and feet away from rotating parts. Keep clear of the discharge opening.
- Keep bystanders and children out of the operating area. Never allow children to operate the machine.
- Shut off the engine, remove the key, and wait for all movement to stop before you leave the operator's position. Allow the machine to cool before adjusting, servicing, cleaning, or storing it.

Improperly using or maintaining this machine can result in injury. To reduce the potential for injury, comply with these safety instructions and always pay attention to the safety-alert symbol ⚠, which means Caution, Warning, or Danger—personal safety instruction. Failure to comply with these instructions may result in personal injury or death.

Safety and Instructional Decals

Safety decals and instructions are easily visible to the operator and are located near any area of potential danger. Replace any decal that is damaged or missing.

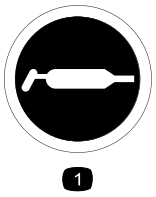

decal58-6520

58-6520

1. Grease

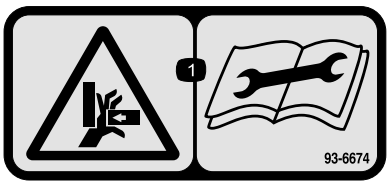

decal93-6674

93-6674

1. Crushing hazard, hand—read the instructions before servicing or performing maintenance.

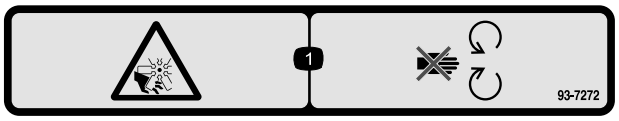

decal93-7272

93-7272

1. Cutting/dismemberment hazard; fan—stay away from moving parts.

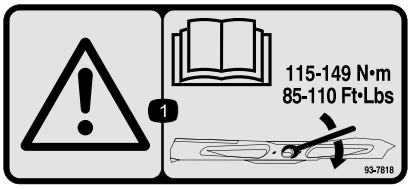

decal93-7818

93-7818

1. Warning—read the *Operator's Manual* for instructions on torquing the blade bolt/nut to 115 to 149 N·m (85 to 110 ft-lb).

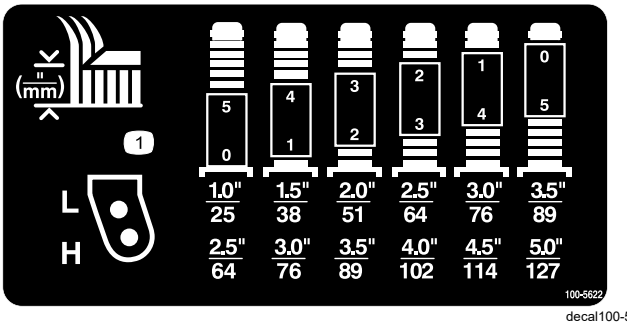

decal100-5622

100-5622

1. Height-of-cut adjustment

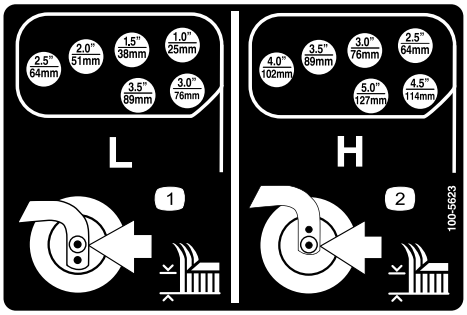

decal100-5623

100-5623

1. Low height-of-cut adjustment
2. High height-of-cut adjustment

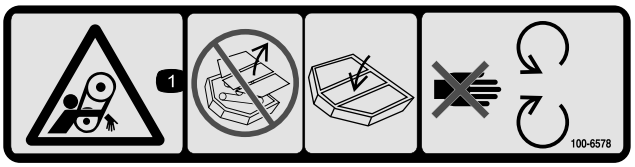

decal100-6578

100-6578

1. Entanglement hazard, belt—do not operate the machine with the shields or guards removed; always keep the shields and guards in place; stay away from moving parts.

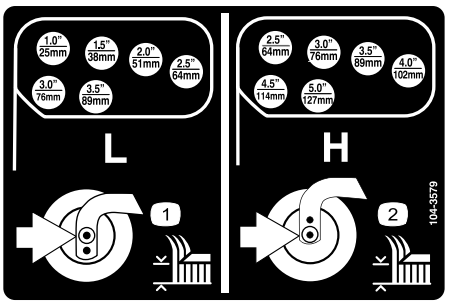

decal104-3579

104-3579

1. Low height-of-cut adjustment
2. High height-of-cut adjustment

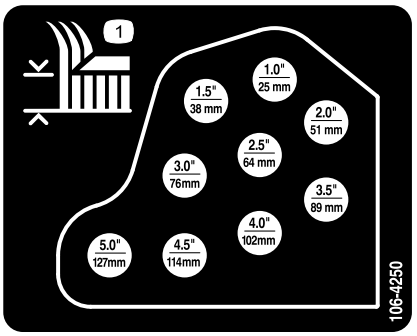

decal106-4250

106-4250

1. Height of cut

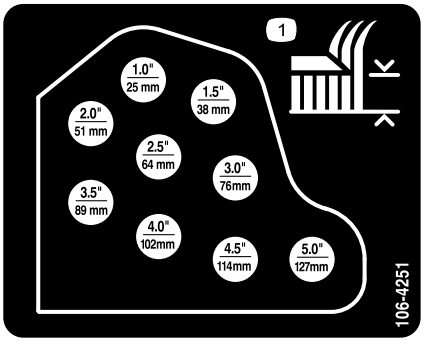

decal106-4251

106-4251

1. Height of cut

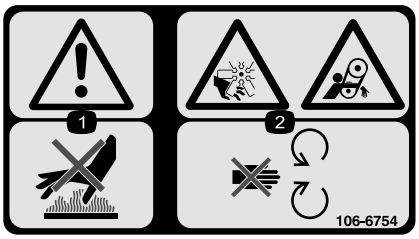

decal106-6754

106-6754

1. Warning—do not touch the hot surface.
2. Cutting/dismemberment hazard, fan; entanglement hazard, belt—stay away from moving parts.

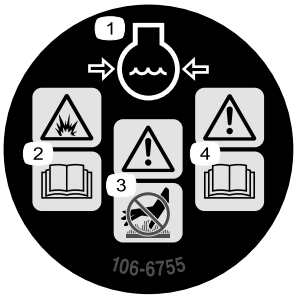

decal106-6755

106-6755

1. Engine coolant under pressure.
2. Explosion hazard—read the *Operator's Manual*.
3. Warning—do not touch the hot surface.
4. Warning—read the *Operator's Manual*.

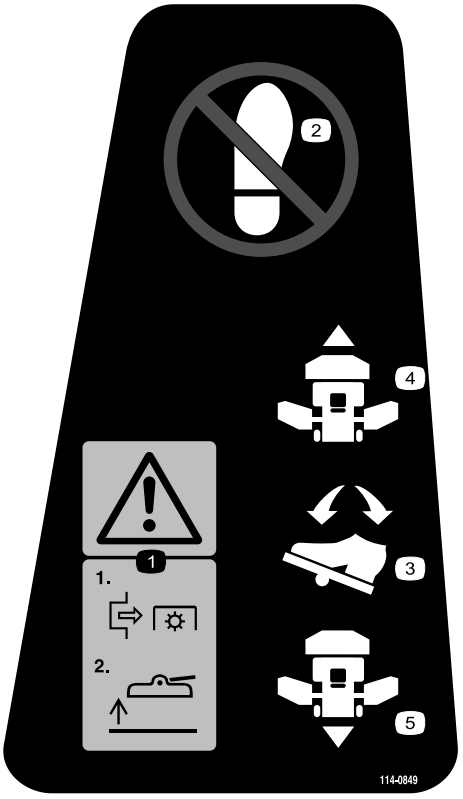

decal114-0849

114–0849

1. Warning—1) Disengage the PTO; 2) Raise the deck
2. Do not place your foot here.
3. Direction pedal
4. Forward direction
5. Reverse direction

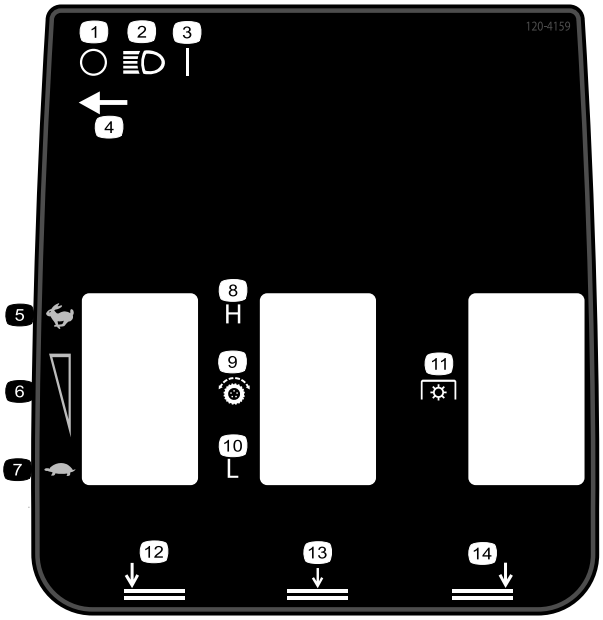

decal120-4159

120-4159

1. Off
2. Lights
3. On
4. Light switch location
5. Fast
6. Variable speed adjustment
7. Slow
8. High
9. Traction drive
10. Low
11. PTO
12. Lower left deck
13. Lower center deck
14. Lower right deck

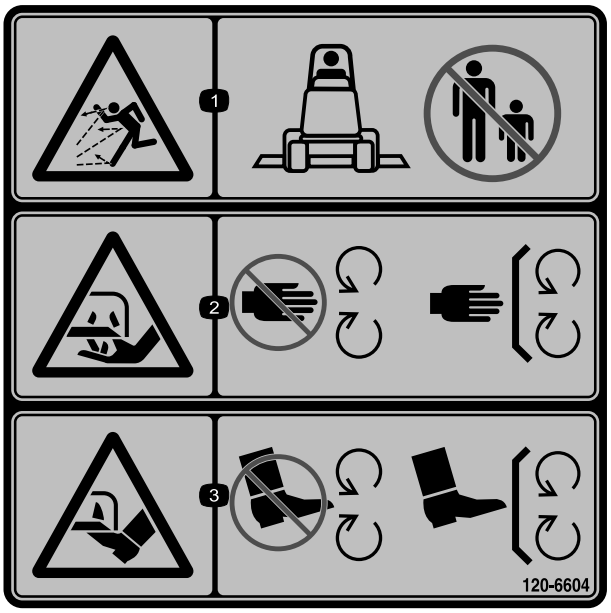

decal120-6604

120-6604

1. Thrown object hazard—keep bystanders away from the machine.
2. Cutting/dismemberment hazard of hand, mower blade—stay away from moving parts; keep all guards and shields in place.
3. Cutting/dismemberment hazard of foot, mower blade—stay away from moving parts; keep all guards and shields in place.

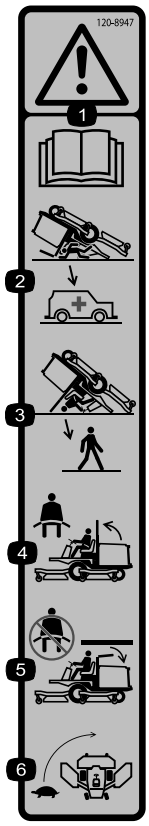

decal120-8947

120-8947

1. Warning—read the *Operator's Manual*.
2. There is no rollover protection when the roll bar is down.
3. There is rollover protection when the roll bar is up.
4. If the roll bar is raised, wear the seat belt.
5. If the roll bar is lowered, do not wear the seat belt.
6. Drive slowly when turning.

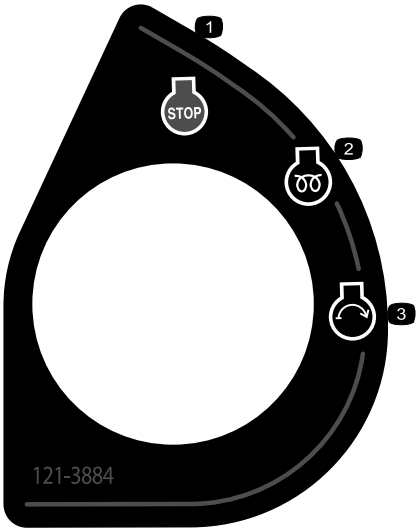

decal121-3884

121–3884

1. Engine—stop
2. Engine—preheat
3. Engine—start

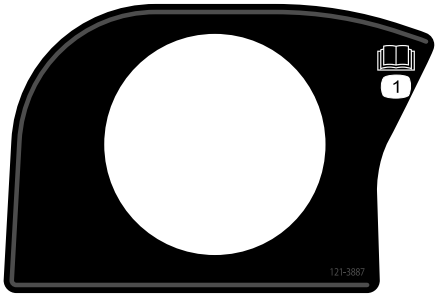

decal121-3887

121–3887

1. Read the *Operator's Manual*.



decalbatterysymbols

Battery Symbols

Some or all of these symbols are on your battery.

1. Explosion hazard
2. No fire, open flame, or smoking
3. Caustic liquid/chemical burn hazard
4. Wear eye protection.
5. Read the *Operator's Manual*.
6. Keep bystanders away from the battery.
7. Wear eye protection; explosive gases can cause blindness and other injuries.
8. Battery acid can cause blindness or severe burns.
9. Flush eyes immediately with water and get medical help fast.
10. Contains lead; do not discard

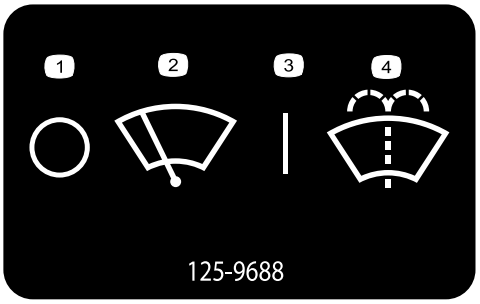

decal125-9688

125-9688

1. Off
2. Windshield wipers
3. On
4. Spray windshield washer fluid.

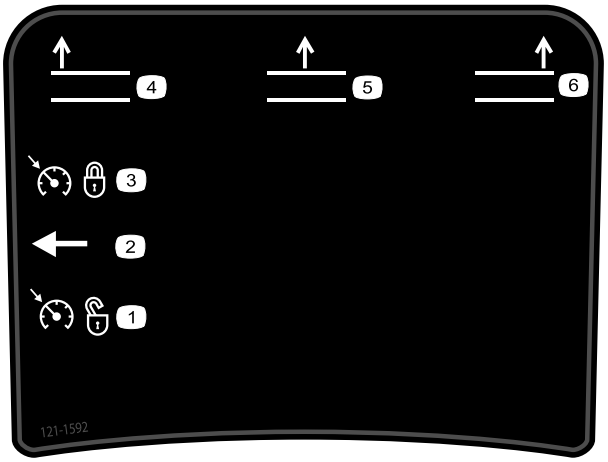

decal121-1592

127-3700

1. Raise the left deck.
2. Raise the center deck.
3. Raise the right deck.
4. Lock the engine speed.
5. Unlock the engine speed.



decal130-0594

130-0594

1. Warning—read the *Operator's Manual*; when sitting in the cab, always wear a seat belt; wear hearing protection.

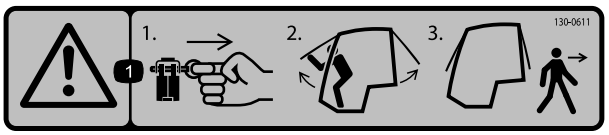

decal130-0611

130-0611

1. Warning—remove the pin, raise the doors, and exit the cab.

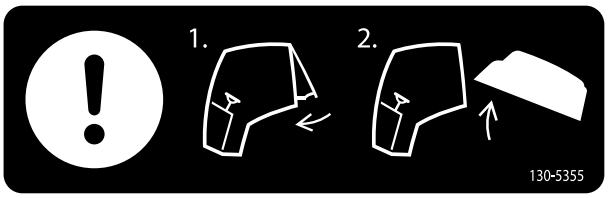

decal130-5355

130-5355

1. Close the rear window.
2. Raise the hood.

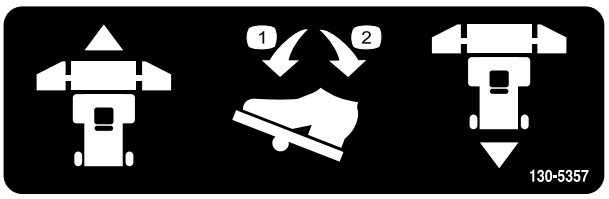

decal130-5357

130-5357

1. Push forward to move forward.
2. Push back to reverse.

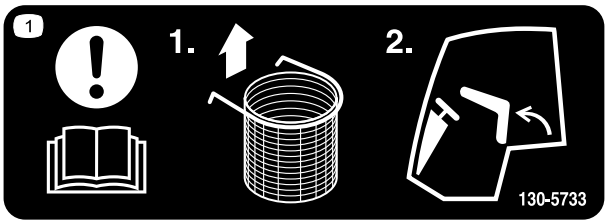

decal130-5733

130-5733

1. Attention; read the *Operator's Manual*—1) Remove the optional trash bag; 2) Tilt the seat forward.



decal130-5980

130-5980

1. Attention; read the *Operator's Manual*—To leave the machine: 1) Lower the cutting deck; 2) Leave the machine.



decal133-8062

133-8062

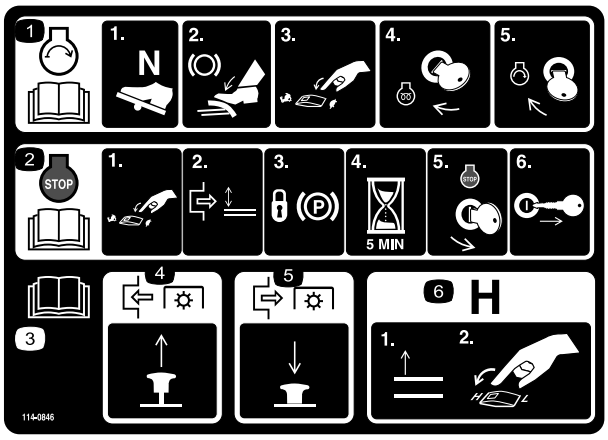

decal114-0846

114-0846

1. Read the *Operator's Manual* for information on starting the engine—1) Set to neutral; 2) Engage the brake; 3) Set the engine speed to slow; 4) Turn the key to preheat; 5) Turn the key to start the engine.
2. Read the *Operator's Manual* for information on shutting off the engine—1) Set the engine speed to slow; 2) Disengage the deck; 3) Lock the parking brake; 4) Wait 5 minutes; 5) Turn the key to shut off the engine; 6) Remove the key from the switch.
3. Read the *Operator's Manual*.
4. Pull the knob out to engage the PTO.
5. Push the knob in to disengage the PTO.
6. Raise the decks to go to H range.

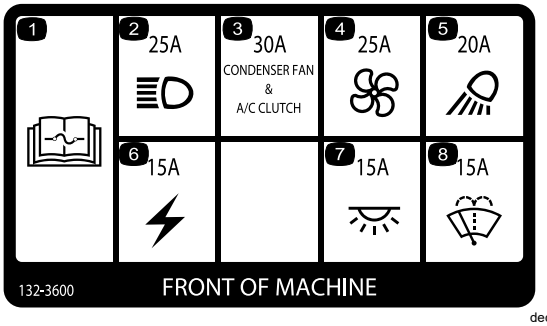

decal132-3600

132-3600

Cab only

1. Read the *Operator's Manual* for more information on fuses.
2. Headlight (25 A)
3. Condenser fan and A/C clutch (30 A)
4. Fan (25 A)
5. Working light (20 A)
6. Auxiliary power (15 A)
7. Cab light (15 A)
8. Windshield wipers (15 A)

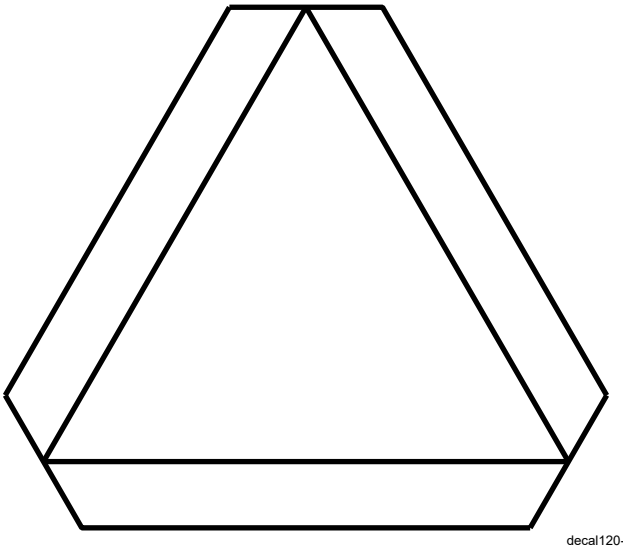

decal120-0250

120-0250

1. Slow-moving vehicle

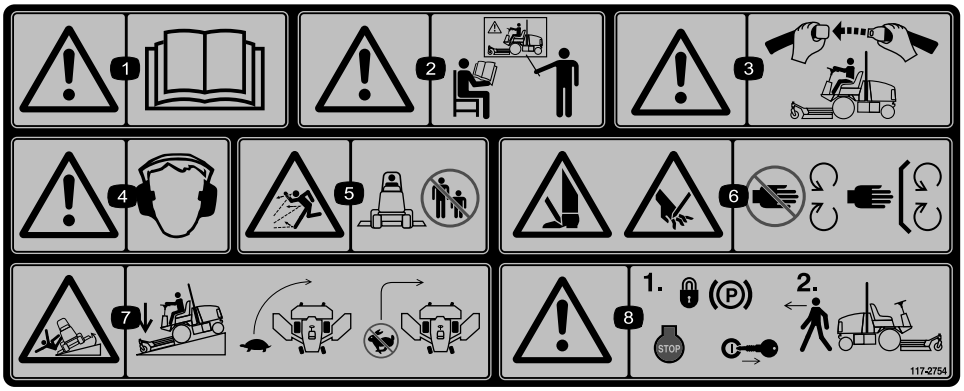

decal117-2754

117-2754

1. Warning—read the *Operator's Manual*.
2. Warning—do not operate this machine unless you are trained.
3. Warning—wear the seatbelt when seated in the operator's position.
4. Warning—wear hearing protection.
5. Thrown object hazard—keep bystanders away.
6. Cutting hazard of hand or foot—stay away from moving parts; keep all guards and shields in place.
7. Tipping hazard—lower the cutting unit when driving down slopes; slow the machine before turning; do not turn at high speeds.
8. Warning—engage the parking brake, shut off the engine, and remove the key before leaving the machine.

Affix over Part No. 117-2754 for CE machines.

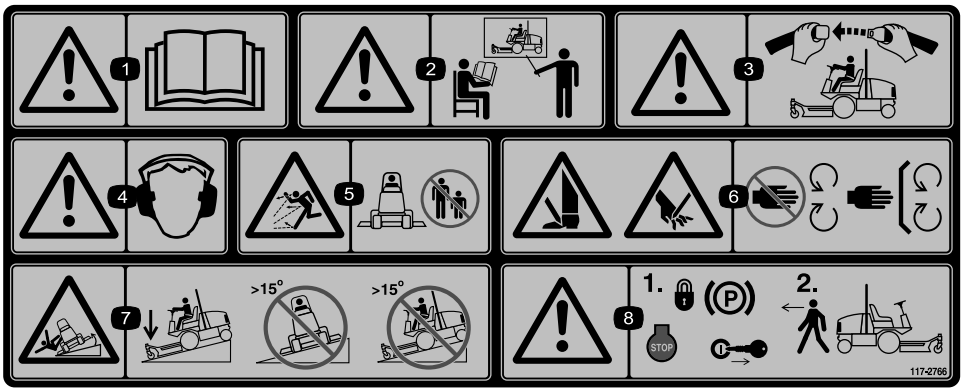

decal117-2766

117-2766

Note: This machine complies with the industry standard stability test in the static lateral and longitudinal tests with the maximum recommended slope indicated on the decal. Review the instructions for operating the machine on slopes in the *Operator's Manual* as well as the conditions in which you would operate the machine to determine whether you can operate the machine in the conditions on that day and at that site. Changes in the terrain can result in a change in slope operation for the machine.

1. Warning—read the *Operator's Manual*.
2. Warning—all operators should be trained before operating the machine.
3. Warning—wear the seatbelt.
4. Warning—wear hearing protection.
5. Thrown object hazard—keep bystanders away.
6. Cutting/dismemberment hazard of hands or feet—stay away from moving parts; keep all guards and shields in place.
7. Tipping hazard—lower the cutting unit when driving down slopes; do not operate on slopes greater than 15°.
8. Warning—engage the parking brake, shut off the engine, and remove the key before leaving the machine.

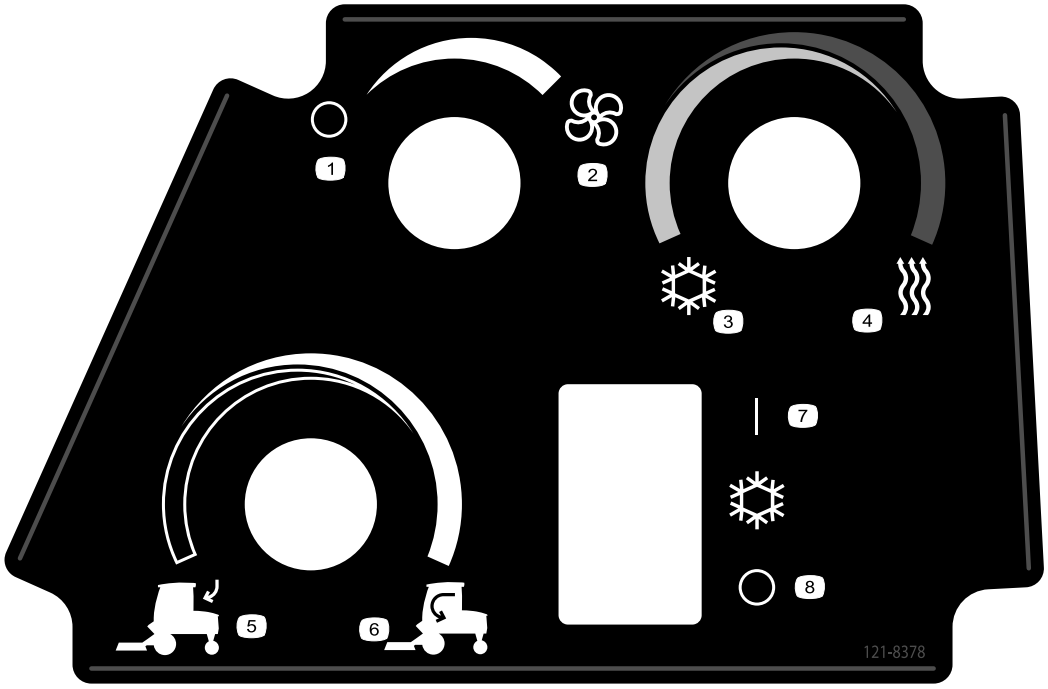

decal121-8378

121-8378

1. Fan—off
2. Fan—on full
3. Cold air
4. Hot air
5. External air
6. Internal air
7. Air conditioner—on (If equipped)
8. Air conditioner—off (If equipped)

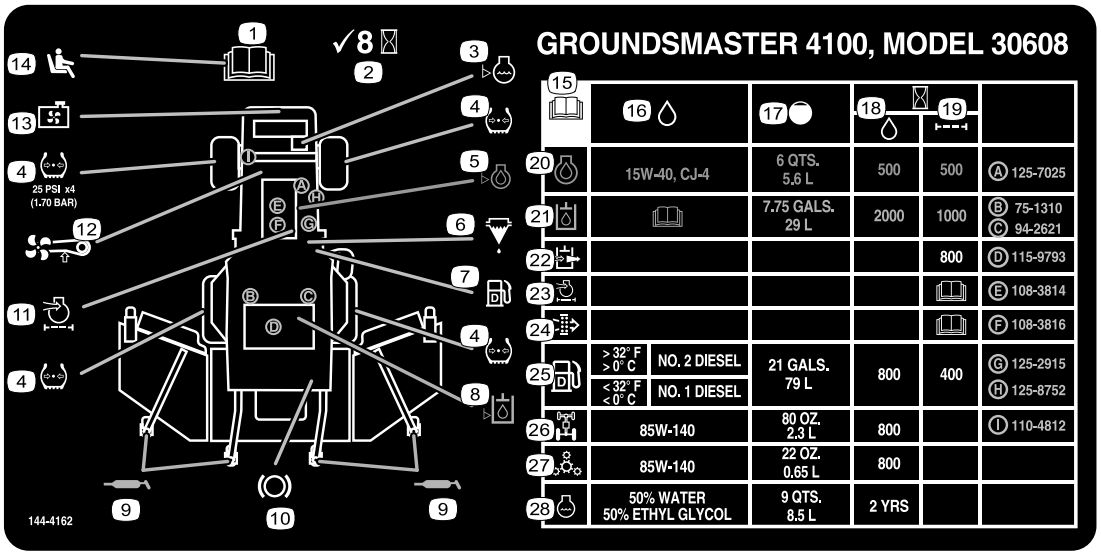

decal144-4162

144-4162

1. Read the *Operator's Manual* before performing maintenance.
2. Check every 8 hours
3. Engine coolant level
4. Tire pressure
5. Engine air filter
6. Fuel/water separator
7. Diesel only
8. Hydraulic fluid
9. Grease points
10. Brake functions
11. Engine oil level
12. Fan belt tension
13. Radiator screen
14. Operator presence controls
15. Read the *Operator's Manual* before performing maintenance
16. Fluid(s)
17. Capacity
18. Fluid interval (hours)
19. Filter change Interval
20. Engine Oil
21. Hydraulic fluid
22. Hydraulic breather
23. Engine air filter
24. Safety air filter
25. Fuel
26. Rear axle
27. Planetary drive
28. Engine coolant

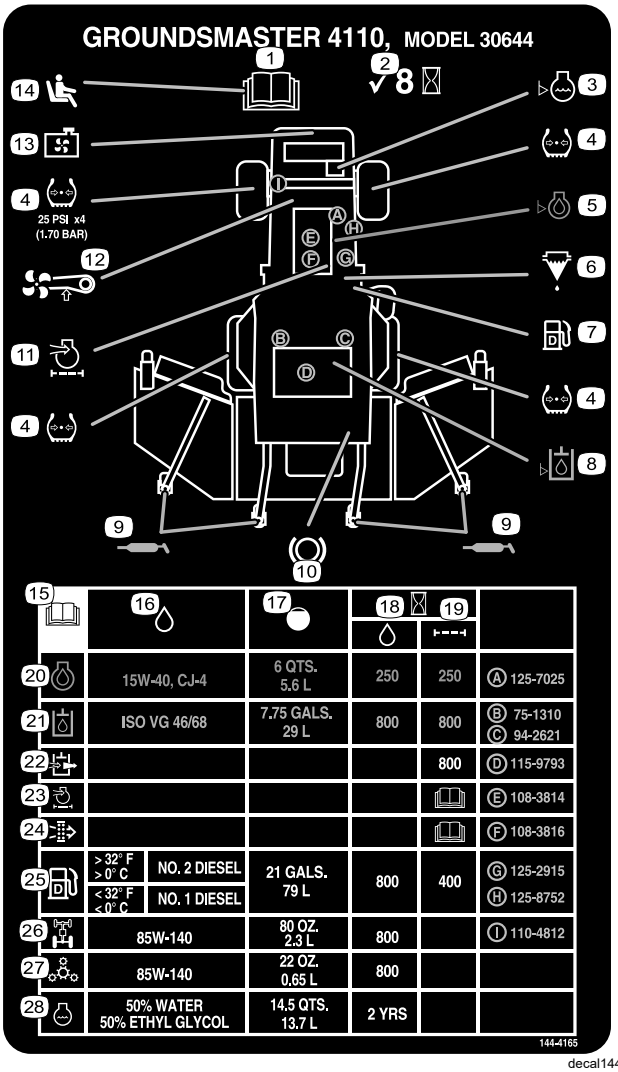

15	16	17	18	19	
20	15W-40, CJ-4	6 QTS. 5.6 L	250	250	Ⓐ 125-7025
21	ISO VG 46/68	7.75 GALS. 29 L	800	800	Ⓑ 75-1310 Ⓒ 94-2621
22				800	Ⓓ 115-9793
23					Ⓔ 108-3814
24					Ⓕ 108-3816
25	> 32° F > 0° C NO. 2 DIESEL / < 32° F < 0° C NO. 1 DIESEL	21 GALS. 79 L	800	400	Ⓖ 125-2915 Ⓗ 125-8752
26	85W-140	80 OZ. 2.3 L	800		Ⓘ 110-4812
27	85W-140	22 OZ. 0.65 L	800		
28	50% WATER 50% ETHYL GLYCOL	14.5 QTS. 13.7 L	2 YRS		

decal144-4165

144-4165

1. Read the *Operator's Manual* before performing maintenance.
2. Check every 8 hours
3. Engine coolant level
4. Tire pressure
5. Engine air filter
6. Fuel/water separator
7. Diesel only
8. Hydraulic fluid
9. Grease points
10. Brake functions
11. Engine oil level
12. Fan belt tension
13. Radiator screen
14. Operator presence controls
15. Read the *Operator's Manual* before performing maintenance
16. Fluid(s)
17. Capacity
18. Fluid interval (hours)
19. Filter change Interval
20. Engine Oil
21. Hydraulic fluid
22. Hydraulic breather
23. Engine air filter
24. Safety air filter
25. Fuel
26. Rear axle
27. Planetary drive
28. Engine coolant

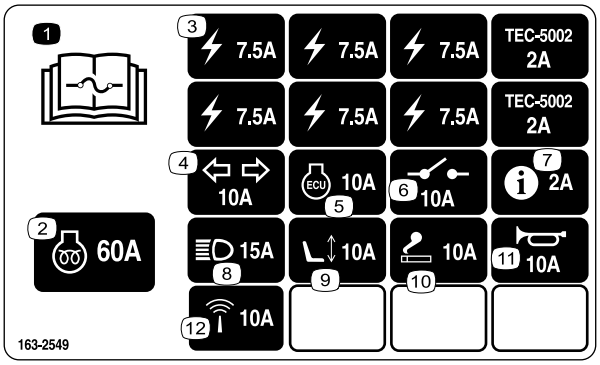

decal163-2549

163-2549

1. Read the *Operator's Manual* for information on fuses.
2. Engine preheat
3. Power supply
4. Turn signals
5. Engine control unit
6. System power
7. InfoCenter
8. Headlights
9. Power seat
10. Lighter
11. Horn
12. Telematics

Setup

Loose Parts

Use the chart below to verify that all parts have been shipped.

Procedure	Description	Qty.	Use
1	No parts required	–	Grease the machine.
2	No parts required	–	Check the tire pressure.
3	No parts required	–	Check the fluid levels.
4	Production-year decal	1	Install the decal (CE machines only).

Media and Additional Parts

Description	Qty.	Use
Operator's Manual	1	Review before operating machine
Engine Owner's Manual	1	Use to reference engine information
Declaration of Conformity	1	
Ignition keys	2	Start the engine.
Caster Cap Wrench	1	Use to adjust caster wheel assemblies

Note: Determine the left and right sides of the machine from the normal operating position.

1

Greasing the Machine

No Parts Required

Procedure

Grease the machine before use; refer to Lubrication (page 55).

Important: **Failure to properly grease the machine will result in premature failure of critical parts.**

2

Checking the Tire Pressure

No Parts Required

Procedure

Check the tire pressure; refer to Checking the Tire Pressure (page 25).

Important: **Maintain pressure in all tires to ensure a good quality-of-cut and proper machine performance. Do not underinflate the tires.**

3

Checking the Fluid Levels

No Parts Required

Procedure

1. Check the engine-oil level; refer to Checking the Engine-Oil Level (page 58).
2. Check the hydraulic-fluid level; refer to Checking the Hydraulic Fluid (page 73).
3. Check the cooling system; refer to Checking the Cooling System (page 69).
4. Check the planetary-gear-drive oil; refer to Checking the Planetary-Gear-Drive Oil (page 65).
5. Check the rear-axle lubricant; refer to Checking the Rear-Axle Lubricant (page 66).
6. Check the rear-axle-gearbox lubricant; refer to Checking the Rear-Axle-Gearbox Lubricant (page 67).

4

Installing the Decal (CE Machines Only)

Parts needed for this procedure:

1	Production-year decal

Procedure

On machines requiring CE compliance, install the production-year decal included in the loose parts and the CE Kit, sold separately (Figure 3).

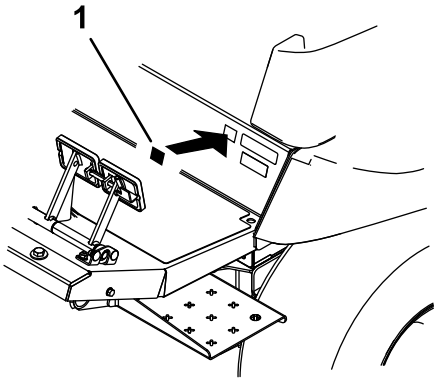

g279510

Figure 3

1. Production-year decal

Product Overview

Controls

Note: Determine the left and right sides of the machine from the normal operating position.

Become familiar with all the controls before you start the engine and operate the machine.

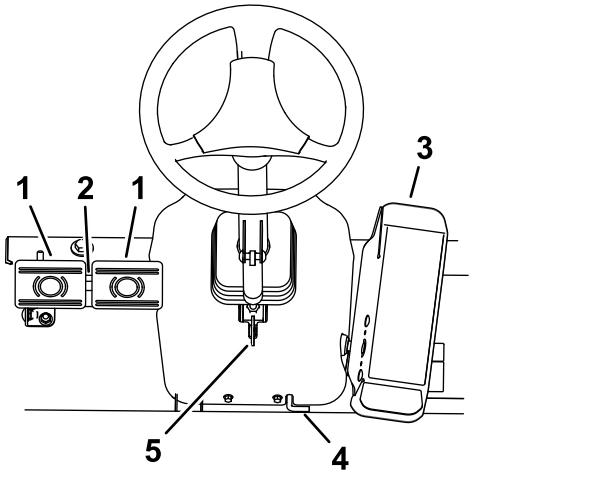

Figure 4

1. Brake pedal
2. Pedal-locking latch
3. Traction pedal
4. Parking brake
5. Tilt-steering lever

Traction Pedal

To stop the machine, reduce the amount of foot pressure that you apply to the traction pedal until the pedal returns to the NEUTRAL position (Figure 4).

Brake Pedals

There are 2 foot pedals that operate individual wheel brakes for turning assistance, parking, and to aid in better side-hill traction. A latch connects the pedals for parking-brake operation and transport (Figure 4).

Pedal-Locking Latch

The pedal-locking latch connects the pedals together to engage the parking brake (Figure 4).

Tilt-Steering Lever

Press the tilt-steering lever down to tilt the steering wheel to the desired position, then release the lever to lock the adjustment (Figure 4).

Parking-Brake Latch

To engage the parking brake, connect the 2 pedals together with the locking latch located behind the pedal pads, and push down on the parking-brake latch while you are pushing on the brake pedals (Figure 4). To release the parking brake, press the brake pedals and the latch will disengage allowing the pedals to come to the disengaged position. Ensure the pedals have fully retracted after disengaging the parking brake.

Key Switch

The key switch (Figure 5) has 3 positions: OFF, ON/PREHEAT, and START.

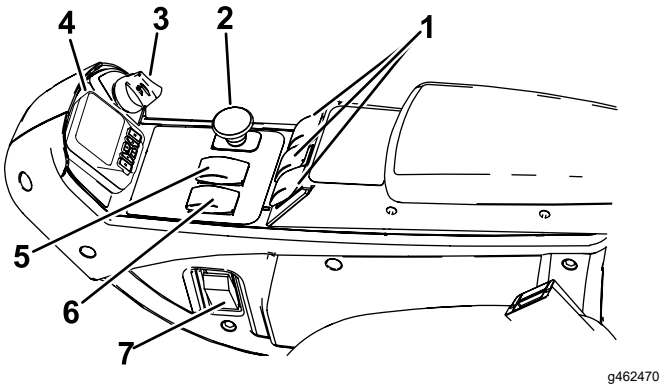

Figure 5

1. Lift switches
2. PTO switch
3. Key switch
4. InfoCenter
5. High-Low speed control
6. Engine-speed switch
7. Light switch (optional)

Engine-Speed Switch

The engine-speed switch (Figure 5) has 2 modes to change the engine speed. Tap the switch to increase or decrease the engine speed in 100 rpm increments. Hold down the switch to automatically move to High or Low idle, depending on which end of the switch you press.

PTO Switch

The PTO switch has 2 positions: OUT (START) and IN (STOP). Pull the PTO button out to engage the mower-deck blades. Push the button in to disengage the mower-deck blades (Figure 5).

High-Low Speed-Control Switch

The High-Low speed-control switch allows the speed range to increase for transport of the machine (Figure 5).

Mower decks do not operate in high range. To switch between the HIGH and LOW range, raise the decks, disengage the PTO and the cruise control, move the traction pedal in the NEUTRAL position, and have the machine move at a slow speed.

Lift Switches

The lift switches raise and lower the cutting units (Figure 5). Press the switches forward to lower the cutting units and rearward to raise the cutting units. When starting the machine, with the cutting units in the down position, press the lift switch down to allow the cutting units to float and mow.

Note: The cutting units do not lower while in the high-speed range and they do not raise or lower if you are out of the seat while the engine is running. Also, the cutting units lower with the key in the ON position and you are in the seat.

Cruise-Control Switch

The cruise-control switch locks in the pedal position to maintain the desired ground speed (Figure 6). Pressing the rear of the switch turns off the cruise control, the middle position of the switch enables the cruise-control function, and the front of the switch sets the desired ground speed.

Note: Pressing either brake pedal or moving the traction pedal into the REVERSE position, for 1 second, also disengages the pedal position.

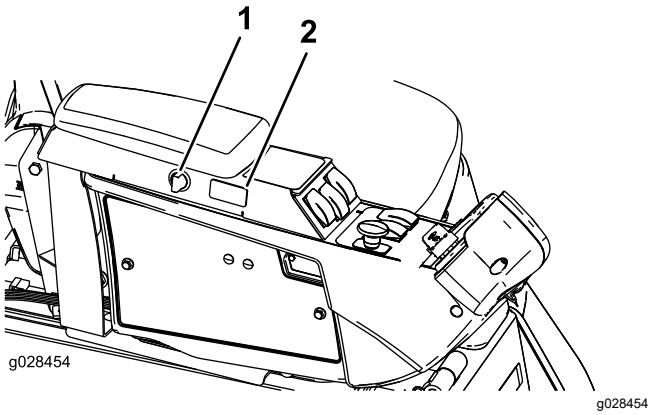

Figure 6

1. Power-point port
2. Cruise-control switch

Power-Point Port

Use the power-point port to power optional electrical accessories (Figure 6).

Seat Controls

Seat-Adjustment Lever

Move the seat-adjustment lever on the side of the seat outward, slide the seat to the desired position, and release the lever to lock the seat into position (Figure 7).

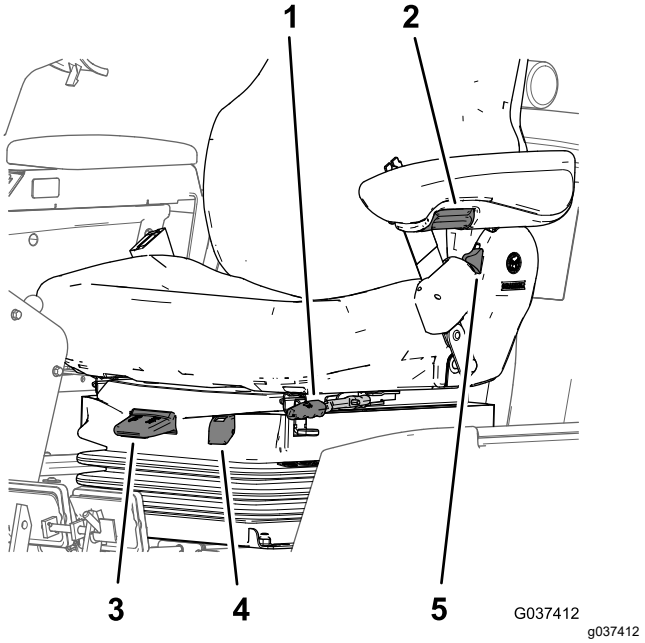

Figure 7

1. Seat-adjustment lever
2. Armrest-adjustment knob
3. Weight-adjustment lever
4. Weight gauge
5. Seat-back adjustment lever

Armrest-Adjustment Knob

Rotate the knob to adjust the armrest angle (Figure 7).

Seat-Back-Adjustment Lever

Move the lever to adjust the seat-back angle (Figure 7).

Weight Gauge

The weight gauge indicates when the seat is adjusted to the weight of the operator (Figure 7). Adjust the height by positioning the suspension within the range of the green region.

Weight-Adjustment Lever

Use this lever to adjust to the proper weight of the operator (Figure 7). Pull up the lever to increase the air pressure and push down to decrease the air pressure. The proper adjustment is correct when the weight gauge is in the green region.

Cab Controls

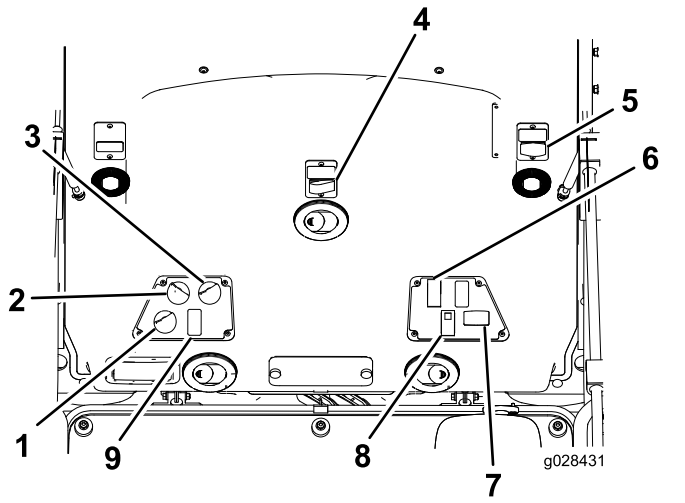

g028431

Figure 8

1. Air-recirculation control
2. Fan control
3. Temperature control
4. Windshield-wiper switch
5. Power outlet
6. Lights switch
7. Flashers switch
8. Air-conditioning switch

Air Recirculation Control

Sets the cab to either recirculate the air in the cabin or to draw air into the cabin from outside (Figure 8).

- Set it to recirculate the air when using the air conditioning.
- Set it to draw air in when using the heater or fan.

Fan-Control Knob

Rotate the fan-control knob to regulate the speed of the fan (Figure 8).

Temperature-Control-Knob

Rotate the temperature-control knob to regulate the air temperature in the cab (Figure 8).

Windshield-Wiper Switch

Use this switch to turn the wind shield wipers on or off (Figure 8).

Air-Conditioning Switch

Use this switch to turn the air conditioning on or off (Figure 8).

Power Outlet

Use this 15 A, 12 V DC power outlet to power compatible devices (Figure 8).

Lights Switch

Use this switch to turn the headlights and tail light on or off (Figure 8).

Flashers Switch

Use this switch to turn the flashers (hazard lights) on or off (Figure 8).

Windshield Latch

Lift up the latches to open the windshield (Figure 9). Press in the latch to lock the windshield to the OPEN position. Pull out and down on the latch to close and secure the windshield.

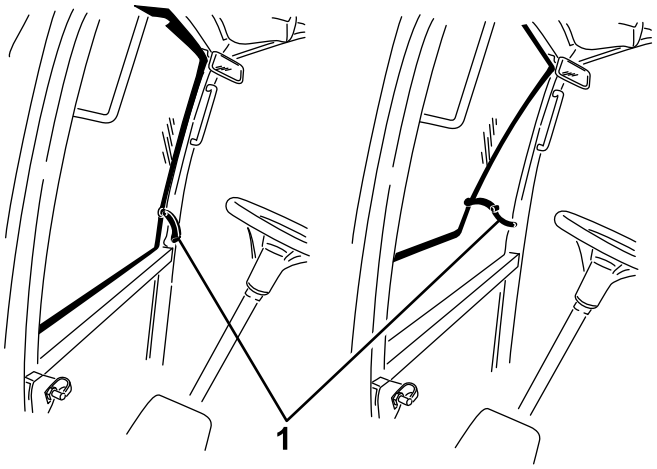

g196911

Figure 9

1. Windshield latch

Rear Window Latch

Lift up the latches to open the rear window. Press in on the latch to lock the window in OPEN position. Pull out and down on the latch to close and secure the window (Figure 9).

Important: **Close the rear window before opening the hood or damage may occur to the hood or rear window.**

InfoCenter LCD Display

The InfoCenter LCD display (Figure 5) shows information about your machine, such as the operating status, various diagnostics, and other information about the machine

The screens that display depend on which buttons you select. The purpose of each button may change depending on what is required at the time.

Specifications

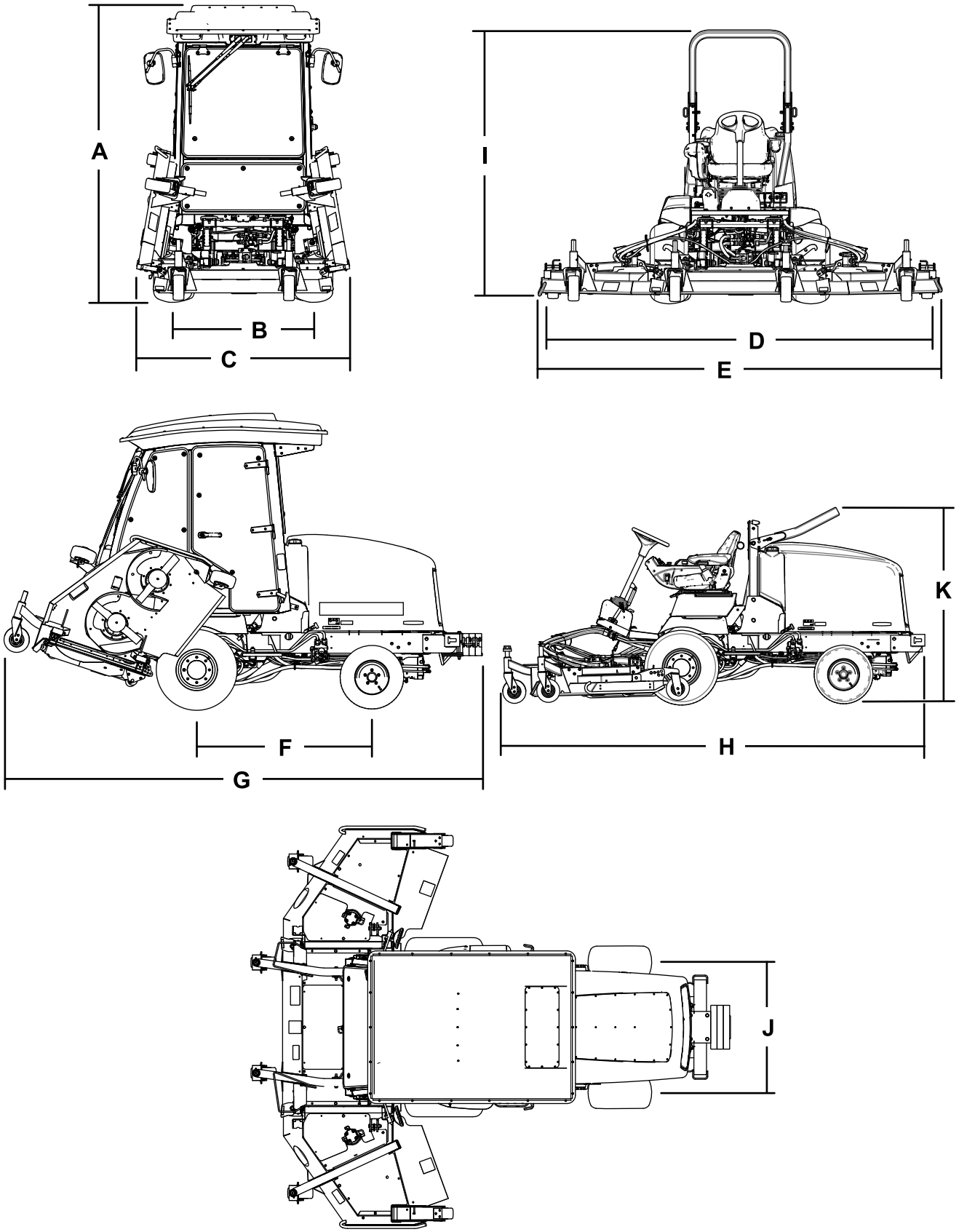

Figure 10

Description		Figure 10 reference	Dimension or Weight
Height with cab		A	237 cm (93 inches)
Height with roll bar raised		I	217 cm (85 inches)
Height with roll bar lowered		K	173 cm (68 inches)
Overall length		H	186 cm(152 inches)
Length for storage		G	184 cm (151 inches)
Width of cut			
	overall	D	315 cm (124 inches)
	front cutting unit		137 cm (54 inches)
	side cutting unit		94 cm (37 inches)
	front and one side cutting unit		226 cm (89 inches)
Overall width			
	cutting units down	E	323 cm (127 inches)
	cutting units up (transport position)	C	180 cm (71 inches)
Wheel base		F	141 cm (56 inches)
Wheel tread (tire center to center)			
	front	B	114 cm (45 inches)
	rear	J	107 cm (42 inches)
Ground clearance			15 cm (6 inches)
Net weight with cab			2165 kg (4,774 lb)
Net weight with roll bar			1922 kg (4,237 lb)

Note: Specifications and design are subject to change without notice.

Attachments/Accessories

A selection of Toro approved attachments and accessories is available for use with the machine to enhance and expand its capabilities. Contact your Authorized Service Dealer or authorized Toro distributor or go to www.Toro.com for a list of all approved attachments and accessories.

Use only genuine Toro replacement parts and accessories. Replacement parts and accessories made by other manufacturers could be dangerous, and such use could void the product warranty.

Operation

Note: Determine the left and right sides of the machine from the normal operating position.

Before Operation

General Safety

- Never allow children or untrained people to operate or service the machine. Local regulations may restrict the age of the operator. The owner is responsible for training all operators and mechanics.
- Become familiar with the safe operation of the equipment, operator controls, and safety signs.
- Shut off the engine, remove the key, and wait for all movement to stop before you leave the operator's position. Allow the machine to cool before adjusting, servicing, cleaning, or storing it.
- Know how to stop the machine and shut off the engine quickly.
- Check that operator-presence controls, safety switches, and guards are attached and functioning properly. Do not operate the machine unless they are functioning properly.
- Before mowing, always inspect the machine to ensure that the blades, blade bolts, and cutting assemblies are in good working condition. Replace worn or damaged blades and bolts in sets to preserve balance.
- Inspect the area where you will use the machine and remove all objects that the machine could throw.
- This product generates an electromagnetic field. If you wear an implantable electronic medical device, consult your health care professional before using this product.

Fuel Safety

- Use extreme care in handling fuel. It is flammable and its vapors are explosive.
- Extinguish all cigarettes, cigars, pipes, and other sources of ignition.
- Use only an approved fuel container.
- Do not remove the fuel cap or fill the fuel tank while the engine is running or hot.
- Do not add or drain fuel in an enclosed space.
- Do not store the machine or fuel container where there is an open flame, spark, or pilot light, such as on a water heater or other appliance.
- If you spill fuel, do not attempt to start the engine; avoid creating any source of ignition until the fuel vapors have dissipated.

Checking the Engine-Oil Level

Before you start the engine and use the machine, check the oil level in the engine crankcase; refer to Checking the Engine-Oil Level (page 58).

Checking the Cooling System

Before you start the engine and use the machine, check the cooling system; refer to Checking the Cooling System (page 24).

Checking the Hydraulic System

Before you start the engine and use the machine, check the hydraulic system; refer to Checking the Hydraulic Fluid (page 73).

Draining the Water Separator

Drain water or other contaminants from the water separator; refer to Servicing the Water Separator (page 62).

Filling the Fuel Tank

Fuel Tank Capacity

Fuel tank capacity: 79 L (21 US gallons)

Fuel Specification

Important: **Use only ultra-low sulphur diesel fuel. Fuel with higher rates of sulfur degrades the diesel oxidation catalyst (DOC), which causes operational problems and shortens the service life of engine components.**

Failure to observe the following cautions may damage the engine.

- Never use kerosene or gasoline instead of diesel fuel.
- Never mix kerosene or used engine oil with the diesel fuel.
- Never keep fuel in containers with zinc plating on the inside.
- Do not use fuel additives.

Petroleum Diesel

Cetane rating: 45 or higher

Sulfur content: Ultra-low sulfur (<15 ppm)

Fuel Table

Diesel fuel specification	Location
ASTM D975 No. 1-D S15 No. 2-D S15	USA
EN 590	European Union
ISO 8217 DMX	International
JIS K2204 Grade No. 2	Japan
KSM-2610	Korea

- Use only clean, fresh diesel fuel or biodiesel fuels.
- Purchase fuel in quantities that can be used within 180 days to ensure fuel freshness.

Use summer-grade diesel fuel (No. 2-D) at temperatures above -7°C (20°F) and winter-grade fuel (No. 1-D or No. 1-D/2-D blend) below that temperature.

Note: Use of winter-grade fuel at lower temperatures provides lower flash point and cold flow characteristics which eases starting and reduces fuel filter plugging.

Using summer-grade fuel above -7°C (20°F) contributes toward longer fuel pump life and increased power compared to winter-grade fuel.

Using Biodiesel

This machine can also use a biodiesel-blended fuel of up to B20 (20% biodiesel, 80% petrodiesel).

Sulfur content: Ultra-low sulfur (<15 ppm)

Biodiesel fuel specification: ASTM D6751 or EN14214

Blended fuel specification: ASTM D975, EN590, or JIS K2204

Important: **The petroleum diesel portion must be ultra-low sulfur.**

Observe the following precautions:

- Biodiesel blends may damage painted surfaces.
- Use B5 (biodiesel content of 5%) or lesser blends in cold weather.
- Monitor seals, hoses, gaskets in contact with fuel as they may degrade over time.
- Fuel filter plugging may occur for a time after you convert to biodiesel blends.
- For more information on biodiesel, contact your authorized Toro distributor.

Adding Fuel

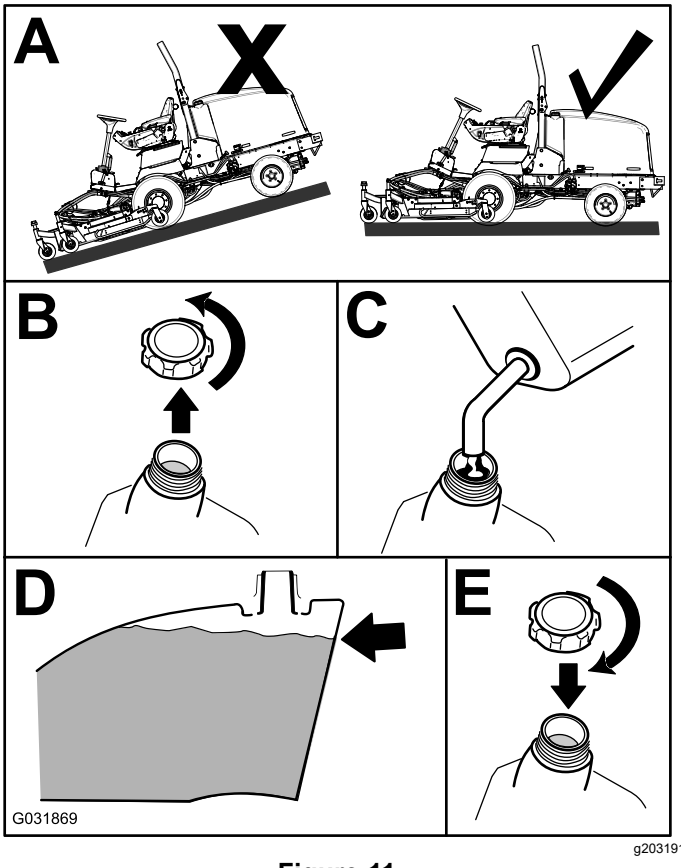

Figure 11

Fill the tank to about 6 to 13 mm (1/4 to 1/2 inch) below the top of the tank, not the filler neck, with No. 2-D diesel fuel.

Note: If possible, fill the fuel tank after each use; this will minimize possible buildup of condensation inside the fuel tank.

Checking the Tire Pressure

Service Interval: Before each use or daily

⚠ DANGER

Low tire pressure decreases machine side-hill stability. This could cause a rollover, which may result in personal injury or death.

Do not underinflate the tires.

The correct air pressure in the tires is 172 to 207 kPa (25 to 30 psi).

Important: **Maintain the recommended pressure in all tires to ensure a good quality of cut and proper machine performance. Do not under-inflate the tires.**

Check the air pressure in all the tires before operating the machine.

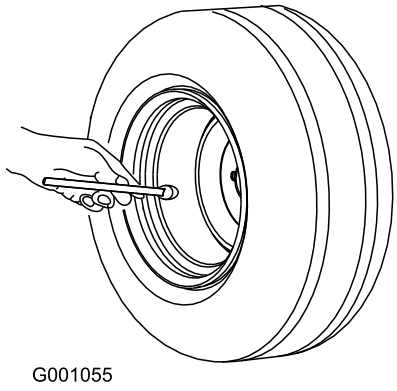

G001055

g001055

Figure 12

Checking the Torque of the Wheel Lug Nuts

Service Interval: After the first hour

After the first 10 hours

Every 200 hours

⚠ WARNING

Failing to maintain proper torque of the wheel-lug nuts could result in personal injury.

Torque the wheel-lug nuts to the proper torque value.

Torque the wheel-lug nuts to 115 to 136 N·m (85 to 100 ft-lb) in the order shown in Figure 13 and Figure 14.

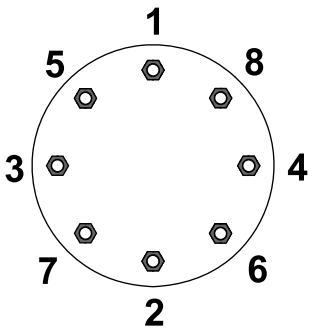

G033358

g033358

Figure 13

Front Wheels

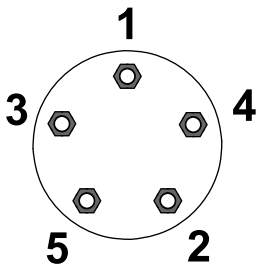

G033359

g033359

Figure 14

Rear Wheels

Adjusting the Mirrors

Cab Model Only

Rearview Mirror

While sitting in the seat, adjust the rearview mirror to attain the best view out the rear window (Figure 15). Pull the lever rearward to tilt the mirror to reduce the brightness and glare of light.

Side-View Mirrors

While sitting in the seat, have someone assist to adjust the side-view mirrors to attain the best view around the side of the machine (Figure 15).

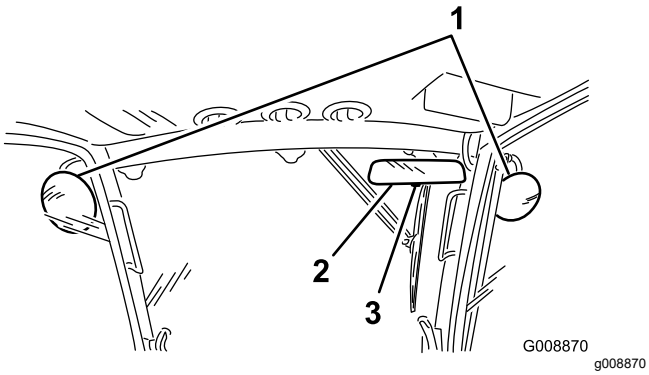

Figure 15

1. Side-view mirrors
2. Rearview mirror
3. Lever

Aiming the Headlights

Optional Accessory

1. Loosen the mounting nuts and position each headlight so that it points straight ahead.

   Note: Tighten the mounting nut just enough to hold the headlight in position.
2. Place a flat piece of sheet metal over the face of the headlight.
3. Mount a magnetic protractor onto the plate.
4. While holding the assembly in place, carefully tilt the headlight downward 3°, then tighten the nut.
5. Repeat the procedure on the other headlight.

Adjusting the Rollover Protection System (ROPS)

⚠ WARNING

To avoid injury or death from rollover: keep the roll bar in the raised locked position and use the seat belt.

Ensure that the seat is secured with the seat latch.

⚠ WARNING

There is no rollover protection when the roll bar is in the down position.

- **Do not operate the machine on uneven ground or on a hillside with the roll bar in the down position.**
- **Lower the roll bar only when absolutely necessary.**
- **Do not wear the seat belt when the roll bar is in the down position.**
- **Drive slowly and carefully.**
- **Raise the roll bar as soon as clearance permits.**
- **Check carefully for overhead clearances (i.e., branches, doorways, electrical wires) before driving under any objects and do not contact them.**

Lowering the Roll Bar

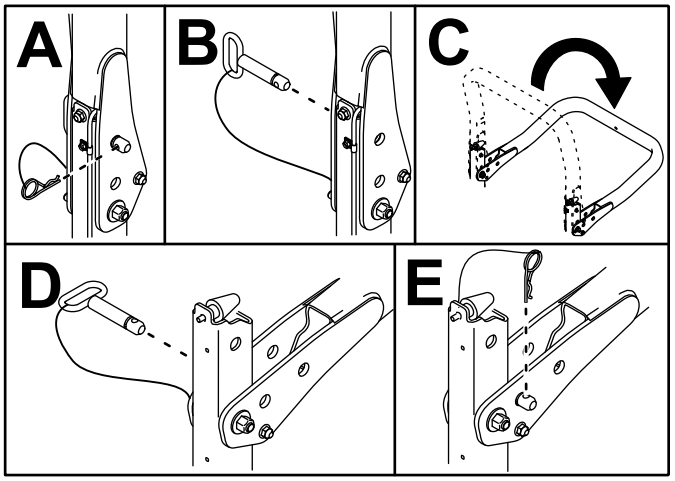

g221650

Figure 16

Raising the Roll Bar

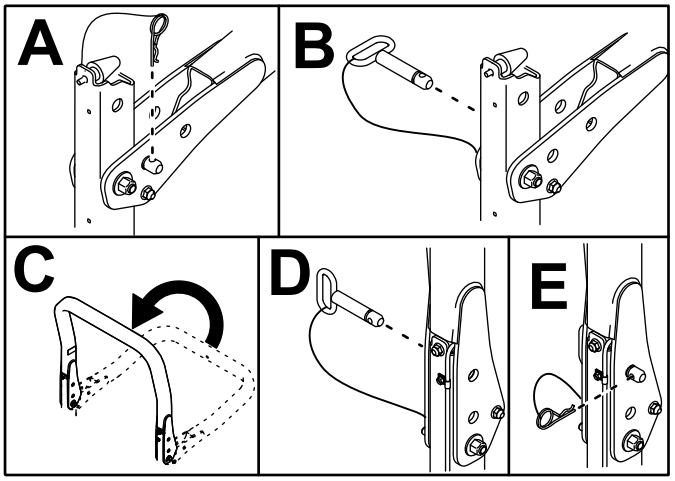

g221651

Figure 17

Adjusting the Height of Cut

Center Cutting Unit

The height of cut is adjustable from 25 to 127 mm (1 to 5 inches) in 13 mm (1/2 inch) increments. To adjust the height of cut on the center cutting unit, position the castor-wheel axles in the upper or lower holes of the castor forks, add or remove an equal number of spacers from the castor forks, and secure the rear chain to the desired hole.

1. Park the machine on a level surface.
2. Start the engine and raise the cutting units to change height of cut.
3. Shut off the engine, engage the parking brake, and remove the key from the ignition after the cutting unit is raised.
4. Position the caster-wheel axles in the same holes in all caster forks.

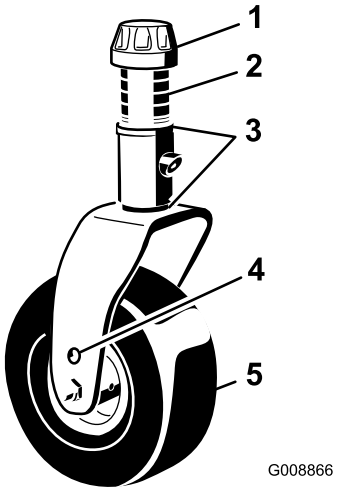

g008866

Figure 18

1. Tensioning cap
2. Spacers
3. Shims
4. Top axle-mounting hole
5. Caster wheel

Note: When operating in 64 mm (2-1/2 inch) height of cut or higher, install the axle bolt in the lower caster-fork hole to prevent grass buildup between the wheel and the fork. When you operate the machine at a height of cut lower than 64 mm (2-1/2 inches) and detect grass buildup, reverse the machines direction to pull any clippings away from the wheel/fork area.

5. Remove the tensioning cap from the spindle shaft and slide the spindle out of the caster arm (Figure 18).
6. Install 2 shims onto the spindle shaft as they were originally installed.

Note: These shims require a level across the entire width of the cutting units. Slide the appropriate number of 13 mm (1/2 inch) spacers (refer to the chart below) onto the spindle shaft to attain the desired height of cut; then slide the washer onto the shaft.

Refer to the following chart to determine the combinations of spacers for the setting (Figure 19):

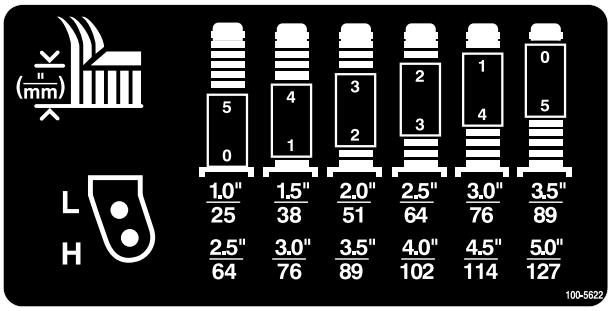

decal100-5622nc

Figure 19

7. Push the caster spindle through the front caster arm.
8. Install the shims (as they were originally installed) and the remaining spacers onto the spindle shaft.
9. Install the tensioning cap to secure the assembly.
10. Remove the hairpin cotter and clevis pin securing the height-of-cut chains to the rear of the cutting unit (Figure 20).

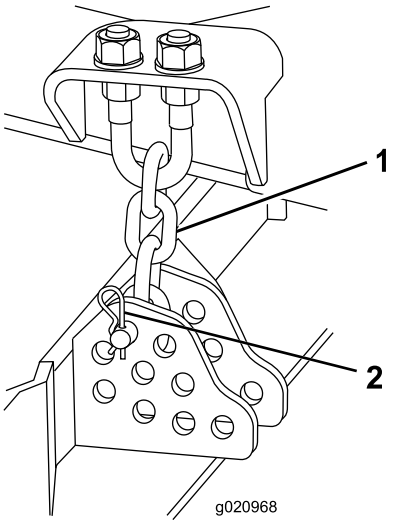

g020968

Figure 20

1. Height-of-cut chain
2. Clevis pin and hairpin cotter

11. Mount the height-of-cut chains to the desired height-of-cut hole with the clevis pin and hairpin cotter (Figure 21).

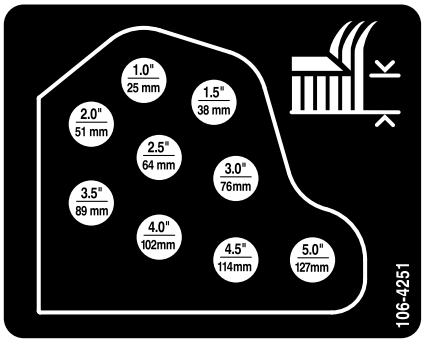

decal106-4251nc

Figure 21

Note: When using 25 mm (1 inch), 38 mm (1-1/2 inch), or occasionally 51 mm (2 inch) height-of-cut, move the skids and gage wheels to the highest position.

Wing Cutting Units

To adjust the height of cut on the wing cutting units, add or remove an equal number of spacers from the caster forks, position the caster-wheel axles in the high or low height-of-cut holes in the caster forks, and secure the pivot arms to the selected height-of-cut bracket holes.

1. Position the caster-wheel axles in the same holes in all of the caster forks (Figure 22 and Figure 24).
2. Remove the tensioning cap from the spindle shaft and slide the spindle out of the caster arm (Figure 22).

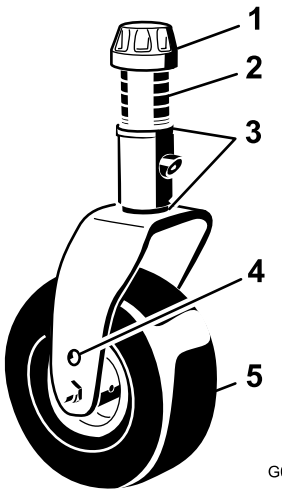

g008866

Figure 22

1. Tensioning cap
2. Spacers
3. Shims
4. Top axle-mounting hole
5. Caster wheel

3. Install 2 shims onto the spindle shaft as they were originally installed.

Note: These shims are required to achieve a level across the entire width of the cutting units. Slide the appropriate number of 13 mm (1/2 inch) spacers (refer to the chart below) onto the spindle shaft to attain the desired height-of-cut, then slide the washer onto the shaft.

Refer to the following chart to determine the combinations of spacers for the setting (Figure 23).

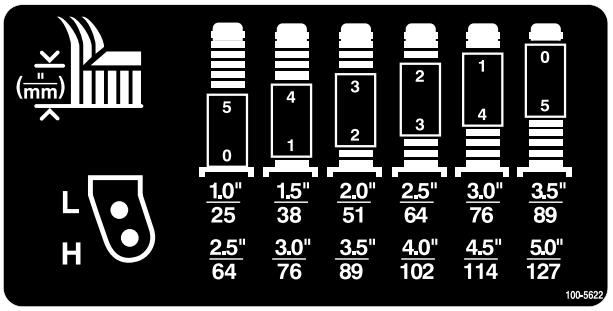

decal100-5622nc

Figure 23

4. Push the caster spindle through the front caster arm.
5. Install the shims (as they were originally installed) and the remaining spacers onto the spindle shaft.
6. Remove the hairpin cotter and clevis pins from the caster-pivot arms (Figure 24).
7. Rotate the tension rod to raise or lower the pivot arm until the holes are aligned with the selected height-of-cut bracket holes in the mower-deck frame (Figure 24 and Figure 25).

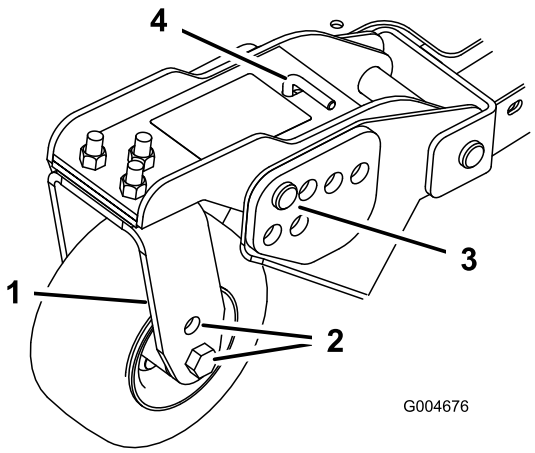

g004676

Figure 24

1. Caster-pivot arm
2. Axle-mounting holes
3. Clevis pin and hairpin cotter
4. Tension rod

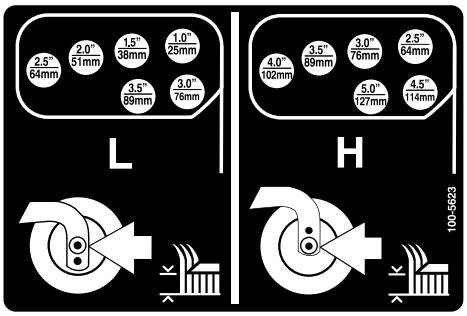

decal100-5623nc

Figure 25

8. Insert the clevis pins and install the hairpin cotters.
9. Rotate the tension rod counterclockwise (finger tight) to put tension on adjustment.

Adjusting the Skids

Mount the skids in the lower position when operating at heights of cut greater than 64 mm (2-1/2 inches) and in the higher position when operating at heights of cut lower than 64 mm (2-1/2 inches).

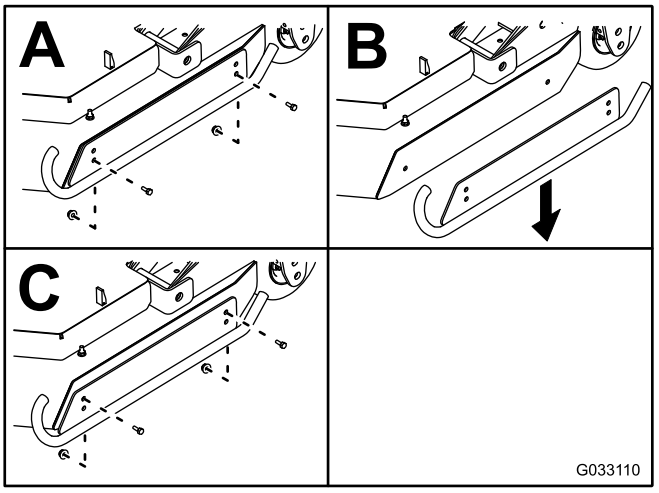

g033110

Figure 26

Adjusting the Mower-Deck Rollers

Mount the mower-deck rollers in the lower position when operating at a height-of-cut greater than 64 mm (2-1/2 inches) and in the higher position when operating at a height-of-cut lower than 64 mm (2-1/2 inches).

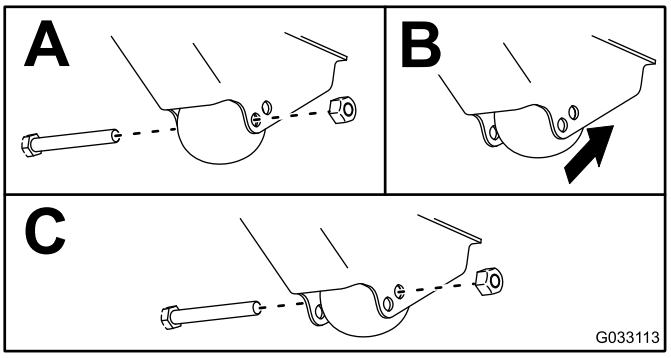

g033113

Figure 27

Adjusting the Blade

Important: **On multi-bladed machines, take care as rotating 1 blade can cause other blades to rotate.**

To ensure proper operation of the cutting unit, there must be a 10 to 16 mm (0.38 to 0.62 inch) clearance between the tips of the side and center mower-deck blades (Figure 28).

1. Raise the cutting unit so the blades are visible and block the center deck section so it cannot fall accidentally.

   Note: The wing decks must be horizontal to the center cutting unit.

2. Rotate a center and adjoining side blade so the blade tips are aligned. Measure the distance between the blade tips (Figure 28).

   Note: The distance should be approximately 10 to 16 mm (0.38 to 0.62 inch).

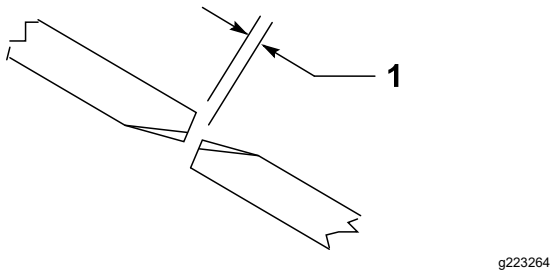

g223264

Figure 28

1. Clearance of 0.38 to 0.62 inches (10-16mm)

3. To adjust distance, locate adjuster bolt on rear pivot link of the cutting unit (Figure 29).
4. Loosen the jam nut on the adjuster bolt.
5. Loosen or tighten the adjuster bolts until you attain a 10 to 16 mm (0.38 to 0.62 inch) clearance, then tighten the jam nut.
6. Repeat the procedure on the opposite side of the cutting unit.

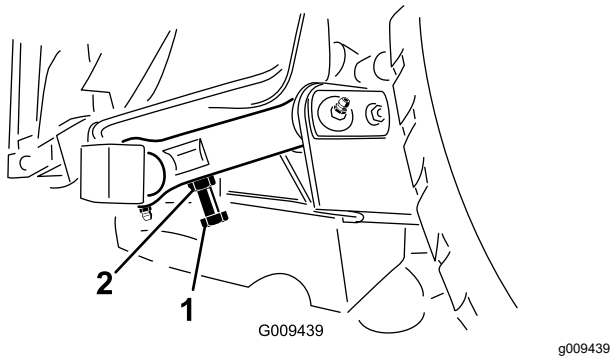

g009439

Figure 29

1. Adjuster bolt
2. Jam nut

Correcting a Mismatch Between the Cutting Units

Due to differences in grass conditions and the counterbalance setting of the traction unit, a sample area of grass should be cut and the appearance checked before formal cutting is started.

1. Set all cutting units to the desired height of cut; refer to Adjusting the Height of Cut (page 29).
2. Check and adjust the air pressure in the front and rear tire of the machine to 172 to 207 kPa (25 to 30 psi).
3. Check and adjust the air pressure in all of the caster tires for the cutting unit to 345 kPa (50 psi).
4. Check the charge and counterbalance pressures with the engine at HIGH IDLE, using hydraulic-test ports.

   Note: Adjust the counterbalance to 2241 kPa (325 psi).

5. Check for bent blades; refer to Checking for a Bent Blade (page 80).
6. Cut grass in a test area to determine if all cutting units are cutting at the same height.
7. If mower-deck adjustments are still needed, find a flat surface using a 2 m (6 ft) or a longer straight edge.
8. To ease measuring the blade plane, raise the height-of-cut to 7.6 to 10.1 cm (3 to 4 inches); refer to Adjusting the Height of Cut (page 29).
9. Lower the cutting units onto a flat surface and remove the covers from the top of the cutting units.
10. Loosen the flange nut, securing the idler pulley, to release the belt tension on each cutting unit.

Setting Up the Center Cutting Unit

Note: It is best to use the Toro tool (Part No. 121-3874) to tighten the tensioning cap.

1. Rotate the blade on each spindle until the ends face forward and backward.
2. Measure from the floor to the front tip of the cutting edge.
3. Adjust the shims (3 mm or 1/8 inch) on the front caster fork(s) to match the height-of-cut decal (Figure 30); refer to Adjusting the Height of Cut (page 29).

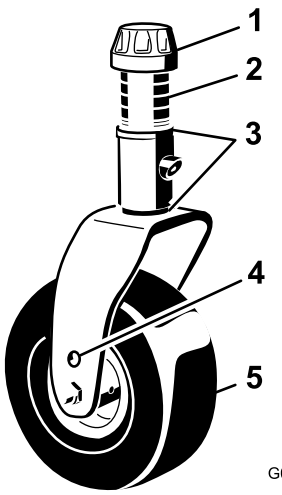

g008866

Figure 30

1. Tensioning cap
2. Spacers
3. Shims
4. Top axle-mounting hole
5. Caster wheel

Setting Up the Side Cutting Units

1. Rotate the blade of each spindle until the ends face forward and backward.
2. Measure from the floor to the front tip of the cutting edge.
3. Adjust the shims (3 mm or 1/8 inch) on front caster arm(s) to match the height-of-cut decal (Figure 31).

   Note: For the outside blade spindle only, refer to Adjusting the Height of Cut (page 29).

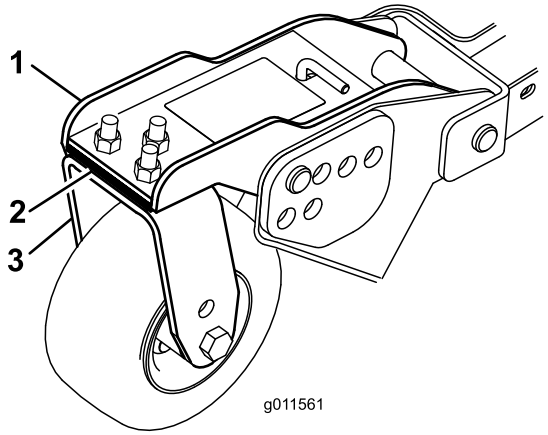

g011561

Figure 31

1. Front caster arm
2. Shims
3. Front caster fork

Matching the Height of Cut Between Cutting Units

1. Position the blade side to side on the outside spindle of both side cutting units.

   Note: Measure from the floor to the tip of the cutting edge on both units and compare. These numbers should be within 3 mm (1/8 inch) of each other. Make no adjustment at this time.

2. Position the blade side to side on the inside spindle of the side cutting unit and corresponding outside spindle of the front cutting unit.

   Note: Measure from the floor to the tip of the cutting edge on the inside edge of side cutting unit to the corresponding outside edge of front cutting unit and compare. The side mower-deck measurement should be within 3 mm (1/8 inch) of the front cutting unit.

   Note: All 3 cutting unit caster wheels should remain on the ground with counterbalance applied.

   Note: If adjustments need to be made to match the cut between the front and side cutting units,

make the adjustments to the **side cutting units only**.

3. If the inside edge of the side cutting unit is too high relative to the outside edge of the front cutting unit, remove a shim from the bottom of the front, inside caster arm on the side cutting unit (Figure 31).

   Note: Check the measurements between the outside edges of both side cutting units and the inside edge of the side cutting unit to the outside edge of the front cutting unit again.

4. If the inside edge is still too high, remove an additional shim from the bottom of front, inside caster arm of the side cutting unit **and** a shim from the front, outside caster arm of the side cutting unit.

5. If the inside edge of the side cutting unit is too low relative to the outside edge of the front cutting unit, add a shim to the bottom of the front, inside caster arm on the side cutting unit.

   Note: Check the measurement between the outside edges of both side cutting units and the inside edge of the side cutting unit to the outside edge of front cutting unit again.

6. If the inside edge is still too low, add an additional shim to the bottom of front, inside caster arm of the side cutting unit **and** add a shim to the front, outside caster arm of the side cutting unit.

7. When the cutting height matches at the edges of front and side cutting units, verify that the side mower-deck pitch is still 8 to 11 mm (5/16 to 7/16 inch).

   Note: Adjust as necessary.

Checking the Safety-Interlock Switches

Service Interval: Before each use or daily

The machine has interlock switches in the electrical system. These switches disengage either the traction unit or the PTO whenever you leave the seat. If you disengage the PTO and engage the parking brake before you leave the seat, the engine continues to run.

1. Drive the machine slowly to a large, open area. Lower the cutting unit, shut off the engine, and apply the parking brake.

2. Sit on the seat and press the traction pedal. Try to start the engine. The engine should not start. If the engine starts, there is a malfunction in the interlock system that should be corrected before beginning operation.

3. Sit on the seat, start the engine, and engage the PTO. While sitting in the seat with the PTO engaged, rise from the seat. The PTO should disengage after a slight delay. If the PTO engages, there is a malfunction in the interlock system that should be corrected before beginning operation.

4. Sit on the seat, engage the parking brake and start the engine. Move the traction pedal out of the NEUTRAL position. The InfoCenter should display “traction not allowed” and the machine should not move. If the machine does move, there is a malfunction in the interlock system that should be corrected before beginning operation.

Selecting a Blade

	Atomic Blade	Flat-Sail Blade	Standard-Sail Blade	Medium-Sail Blade
Grass conditions	Wet, sticky, and spring growth	Light or sparse turf	Normal cutting	All conditions to heavy growth
Leaf mulching	Works well	Do not use	Works well	Works well
Pros	Less lift, breaks up clumped clippings	Does not create lots of air flow in dusty, sandy, and sparse grass	Good performance overall	More lift and less turbulence than standard blade, overall good
Cons	Less lift and less dispersion in heavy conditions	Not recommended for normal to heavy conditions		

Overview of the InfoCenter Display

The display shows information about your machine such as the operating status, various diagnostics, and other information about the machine. There are multiple screens on the display. You can switch between the screens at any time by pressing any of the display buttons and then selecting the appropriate directional arrow.

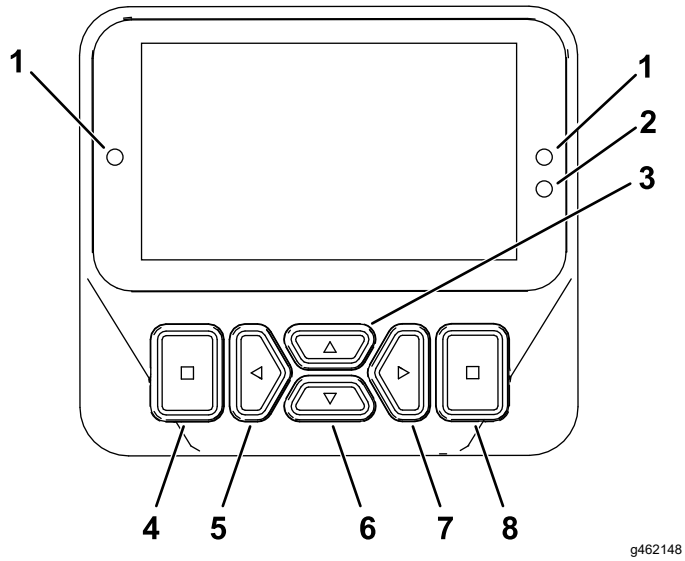

Figure 32

1. Indicator light
2. Display brightness sensor
3. Navigational button— up
4. Back/exit button
5. Navigational button— decrease/ left
6. Navigational button— down
7. Navigational button— increase/ right
8. Enter/select button

Note: The purpose of each button may change depending on what is required at the time. Each button is labeled with an icon displaying its current function.

InfoCenter Icon Description

	Hour meter
	Page change
	Virtual pedal stop settings
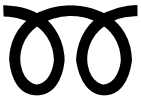	The glow plugs are active.
	The operator must sit in the seat.
	The parking brake is engaged.
	Engine coolant temperature (°C or °F)
	Traction or Traction Pedal
	The cruise control is engaged.
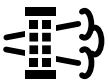	Reset-standby regeneration request
	Parked or recovery regeneration request
	A parked or recovery regeneration is processing.

InfoCenter Icon Description (cont'd.)

	High exhaust temperature
	NOx control diagnosis malfunction; drive the machine back to the shop and contact your authorized Toro distributor (software version U and later).
	The power take-off is disabled.
	The PTO is on.
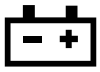	Battery
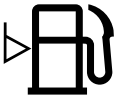	Fuel level
	Warning
	Active
	Inactive
	Previous
	Next
	The cutting units are raising.
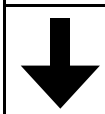	The cutting units are lowering.
	Previous screen
	Fast
	Slow

InfoCenter Icon Description (cont'd.)

	Increase value
	Decrease value
	Menu
	Scroll up/down
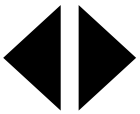	Scroll left/right
	Locked
PIN	PIN Passcode

Using the Menus

To access the InfoCenter menu system, press the menu access button while at the main screen. This brings you to the main menu. Refer to the following tables for a synopsis of the options available from the menus:

Main Menu—Menu Item	Description
Faults	The Faults menu contains a list of the recent machine faults. Refer to the *Service Manual* or contact your authorized Toro distributor for more information on the Faults menu and the information contained there.
Service	The Service menu contains information on the machine such as hours of use, counters, and other similar numbers.
Diagnostics	The Diagnostics menu displays the state of each machine switch, sensor, and control output. You can use this to troubleshoot certain issues as it quickly tells you which machine controls are ON and which are OFF.
Settings	The Settings menu allows you to customize and modify configuration variables on the display.

Machine Settings🔒	The Machine Settings menu allows you to adjust the auto idle, speed, Smart Power, backup alarm, and slope sensor thresholds.
About	The About menu lists the model number, serial number, and software version of your machine.

Service—Menu Item	Description
Hours	Lists the total number of hours that the machine, engine, and PTO have been on, as well as the number of hours the machine has been transported and service due.
Counts	Lists numerous counts the machine has experienced.
DPF Regeneration	The diesel particulate filter regeneration option and DPF submenus
Fan Reverse	Allows you to initiate a reverse fan cycle.
Fuel Rate🔒	Lists the average fuel rate.
Traction Pedal🔒	Lists the traction pedal calibration values and allows the traction pedal to be calibrated.

Diagnostics—Menu Item	Description
Left Deck	Indicates the input and output for these components.
Center Deck	
Right Deck	
Traction Pedal	
Traction	
Range Hi/Low	
PTO	
Engine	
Cruise Control	
Light Kit	

Settings—Menu Item	Description
Enter PIN	Allows a person (superintendent/mechanic) authorized by your company with the PIN code to access protected menus.
Protected Settings🔒	Allows a person authorized by your company with the PIN code to access protected settings.
Reset Defaults🔒	Resets the settings to the default settings.

Backlight	Controls the brightness of the LCD display.
Language	Controls the language used on the InfoCenter*.
Font Size	Controls the size of the font on the display.
Units	Controls the units used on the InfoCenter (English or Metric).

Note: The Machine Settings menu will only show when the PIN is entered.

Machine Settings—Menu Item🔒	Description
Auto Idle 🔒	Controls the amount of time allowed before idling the engine when the machine is not in use
Mow Speed 🔒	Controls the maximum speed while in mow (low range).
Transport Speed 🔒	Controls the maximum speed while in transport (high range).
Smart Power 🔒	Turns Smart Power on and off.
Backup Alarm 🔒	Indicates there is a backup alarm installed.
Slope Sensor Installed 🔒	Indicates there is a slope sensor installed.

About—Menu Item	Description
Model	Lists the model number of the machine.
SN	Lists the serial number of the machine.
S/W Rev	Lists the software revision of the primary controller.
Stage V	Shows yes or no depending on the engine.
XDM-2700🔒	Lists the software revision of the InfoCenter
CAN🔒	Lists the machine communication bus status
S/W Rev-S🔒	Lists the software revision of the secondary controller.

🔒Protected under Protected Menus—accessible only by entering PIN

Protected Menus

There are operating configuration settings that are adjustable within the SETTINGS of the InfoCenter. To lock these settings, use the PROTECTED MENU.

Note: At the time of delivery, the initial password code is programmed by your distributor.

Accessing Protected Menus

Note: The factory default PIN code for you machine is either 0000 or 1234.

If you changed the PIN code and forgot the code, contact your authorized Toro distributor for assistance.

1. From the MAIN MENU, scroll down to the SETTINGS menu and press the select button (Figure 33).

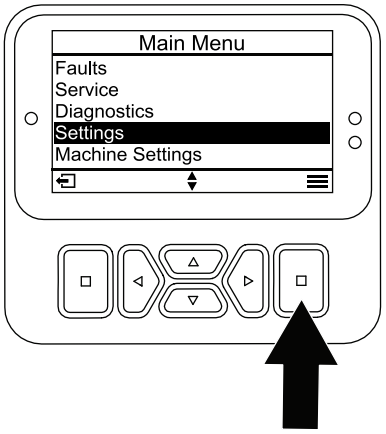

g471349

Figure 33

2. In the SETTINGSmenu, scroll to the ENTEER PIN and press the select button (Figure 34A).

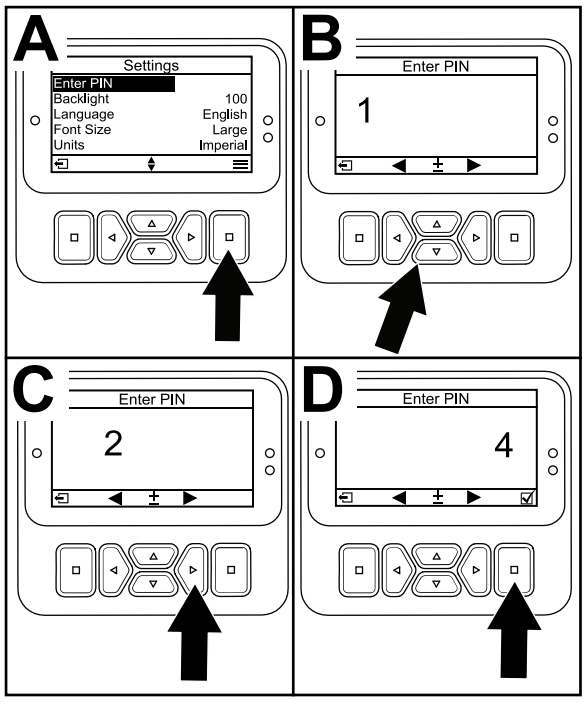

g471350

Figure 34

3. To enter the PIN code, press the up/down navigation buttons until the correct first digit appears, then press the right navigation button to move on to the next digit (Figure 34B and Figure 34C). Repeat this step until the last digit is entered.
4. Press the select button.

   Note: If the display accepts the PIN code and the protected menu is unlocked, the word “PIN” displays in the upper right corner of the screen.
5. To lock the protected menu, rotate the key switch to the OFF position and then to the ON position.

Viewing and Changing the Protected Menu Settings

1. In SETTINGS, scroll down to PROTECT SETTINGS.
2. To view and change the settings without entering a PIN code, use the select button to change the PROTECT SETTINGS to ☐ (Off).
3. To view and change the settings with a PIN code, use the select button to change the PROTECT SETTINGS to ☑ (On), set the PIN code, and turn the key in the ignition switch to the OFF position and then to the ON position.

Setting the Service Due Timer

The service due timer resets the service due hours after a scheduled maintenance procedure is performed.

1. In SETTINGS , scroll to ENTER PIN and press the select button.
2. Enter PIN; refer to Accessing Protected Menus.
3. In SERVICE , navigate to HOURS and press the select button.
4. Scroll down to SERVICE DUE.

   Note: If service is currently due, NOW appears next to SERVICE DUE.
5. Highlight the service interval and press the select button.

   Note: The service interval (250 Hrs, 500 Hrs, etc) is located next to SERVICE DUE. Service interval is a protected menu item.
6. When the RESET SERVICE TIMER? screen appears, press the select button for YES or the back button for NO.
7. After you select YES, the interval screen clears and reverts back to the service hours selections.

Setting the Auto Idle

1. In the Settings Menu, scroll down to Auto Idle.
2. Press the inner right or left button to change the auto idle time between OFF, 8S, 10S, 15S, 20S, and 30S.

Setting the Maximum Allowed Mow Speed

- In the Settings Menu, Scroll down to Mow Speed and press the right button.
- Use the inner right button to increase the maximum full mow speed (50%, 75%, or 100%).
- Use the inner left button to decrease the maximum full mow speed (50%, 75%, or 100%).
- Press the left button to exit.

Setting the Maximum Allowed Transport Speed

- In the Settings Menu, scroll down to Transport Speed and press the right button.
- Use the inner right button to increase the maximum transport speed (50%, 75%, or 100%).
- Use the inner left button to decrease the maximum transport speed (50%, 75%, or 100%).
- Press the left button to exit.

When finished with the Protected Menu, press the left button to exit to the Main Menu, then press the left button to exit to the Run Menu.

Turning the Smart Power ON/OFF

1. In SETTINGS, scroll down to SMART POWER.
2. Press the right navigation button to switch between ON and OFF.

Understanding the Diagnostic Light

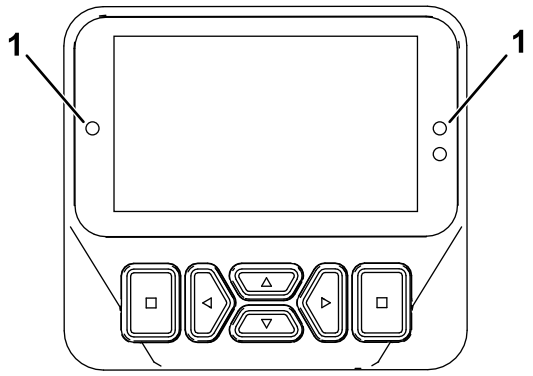

g462666

Figure 35

1. Diagnostic light

- Flashing red—active fault
- Solid red—active advisory
- Solid green—normal operation
- Blinking green—updating code

During Operation

During Operation Safety

General Safety

- The owner/operator can prevent and is responsible for accidents that may cause personal injury or property damage.
- Wear appropriate clothing, including eye protection; long pants; substantial, slip-resistant footwear; and hearing protection. Tie back long hair and do not wear loose clothing or loose jewelry. Wear a dust mask in dusty operating conditions.
- Do not operate the machine while ill, tired, or under the influence of alcohol or drugs.
- Use your full attention while operating the machine. Do not engage in any activity that causes distractions; otherwise, injury or property damage may occur.
- Before you start the engine, ensure that all drives are in neutral, the parking brake is engaged, and you are in the operating position.
- Do not carry passengers on the machine and keep bystanders and children out of the operating area.
- Operate the machine only in good visibility to avoid holes or hidden hazards.
- Avoid mowing on wet grass. Reduced traction could cause the machine to slide.
- Keep your hands and feet away from rotating parts. Keep clear of the discharge opening.
- Look behind and down before backing up to be sure of a clear path.
- Use care when approaching blind corners, shrubs, trees, or other objects that may obscure your vision.
- Stop the blades whenever you are not mowing.
- Stop the machine, remove the key, and wait for all moving parts to stop before inspecting the attachment after striking an object or if there is an abnormal vibration in the machine. Make all necessary repairs before resuming operation.
- Slow down and use caution when making turns and crossing roads and sidewalks with the machine. Always yield the right-of-way.
- Disengage the drive to the cutting unit, shut off the engine, remove the key, and wait for all movement to stop before adjusting the height of cut (unless you can adjust it from the operating position).
- Operate the engine only in well-ventilated areas. Exhaust gases contain carbon monoxide, which is lethal if inhaled.

- Never leave a running machine unattended.
- Before you leave the operator's position, do the following:
  - Park the machine on a level surface.
  - Disengage the power takeoff and lower the attachments.
  - Engage the parking brake.
  - Shut off the engine and remove the key.
  - Wait for all movement to stop.
- Operate the machine only in good visibility. Do not operate the machine when there is the risk of lightning.
- Do not use the machine as a towing vehicle.
- Use accessories, attachments, and replacement parts approved by Toro only.
- Use the cruise control (if equipped) only when you can operate the machine in an open, flat area that is free from obstacles and where the machine can move at a constant speed without interruption.

Rollover Protection System (ROPS) Safety

- The ROPS is an integral and effective safety device.
- Do not remove any of the ROPS components from the machine.
- Ensure that the seat belt is attached to the machine.
- Pull the belt strap over your lap and connect the belt to the buckle on the other side of the seat.
- To disconnect the seat belt, hold the belt, press the buckle button to release the belt, and guide the belt into the auto-retract opening. Ensure that you can release the belt quickly in an emergency.
- Check carefully for overhead obstructions and do not contact them.
- Keep the ROPS in safe operating condition by thoroughly inspecting it periodically for damage and keeping all the mounting fasteners tight.
- Replace damaged ROPS components. Do not repair or alter them.

Additional ROPS Safety for Machines with a Cab or a Fixed Roll Bar

- A cab installed by Toro is a roll bar.
- Always wear your seat belt.

Additional ROPS Safety for Machines with a Foldable Roll Bar

- Keep a folding roll bar in the raised and locked position, and wear your seat belt when operating the machine with the roll bar in the raised position.
- Lower a folding roll bar temporarily only when necessary. Do not wear the seat belt when the roll bar is folded down.
- Be aware that there is no rollover protection when a folded roll bar is in the down position.
- Check the area that you will be mowing and never fold down a folding roll bar in areas where there are slopes, drop-offs, or water.

Slope Safety

- Slopes are a major factor related to loss of control and rollover accidents, which can result in severe injury or death. You are responsible for safe slope operation. Operating the machine on any slope requires extra caution.
- Evaluate the site conditions to determine if the slope is safe for machine operation, including surveying the site. Always use common sense and good judgment when performing this survey.
- Review the slope instructions listed below for operating the machine on slopes and to determine whether you can operate the machine in the conditions on that day and at that site. Changes in the terrain can result in a change in slope operation for the machine.
- Avoid starting, stopping, or turning the machine on slopes. Avoid making sudden changes in speed or direction. Make turns slowly and gradually.
- Do not operate a machine under any conditions where traction, steering, or stability is in question.
- Remove or mark obstructions such as ditches, holes, ruts, bumps, rocks, or other hidden hazards. Tall grass can hide obstructions. Uneven terrain could overturn the machine.
- Be aware that operating the machine on wet grass, across slopes, or downhill may cause the machine to lose traction. Loss of traction to the drive wheels may result in sliding and a loss of braking and steering.
- Use extreme caution when operating the machine near drop-offs, ditches, embankments, water hazards, or other hazards. The machine could suddenly roll over if a wheel goes over the edge or the edge caves in. Establish a safety area between the machine and any hazard.
- Identify hazards at the base of the slope. If there are hazards, mow the slope with a pedestrian-controlled machine.

- If possible, keep the cutting unit(s) lowered to the ground while operating on slopes. Raising the cutting unit(s) while operating on slopes can cause the machine to become unstable.
- Use extreme caution with grass-collection systems or other attachments. These can change the stability of the machine and cause a loss of control.

Understanding the Operating Characteristics of the Machine

Practice driving the machine, because it has a hydrostatic transmission and its characteristics may differ from other turf-maintenance machines. Some points to consider when operating the traction unit, cutting unit, or other implements are that the transmission, engine speed, and the load on the mower blades or other implements affect machine performance.

With Toro Smart Power™, you do not need to listen to the engine speed in heavy load conditions. Smart Power prevents the engine from bogging down in heavy cutting conditions by automatically controlling the machine speed and optimizing cutting performance.

You can use the brakes to assist in turning the machine. However, use them carefully, especially on soft or wet grass, because the turf may be torn accidentally. Another benefit of the brakes is to maintain traction. For example, in some slope conditions, the uphill wheel slips and loses traction. If this situation occurs, press the uphill brake pedal gradually and intermittently until the uphill wheel stops slipping, This action increases the traction on the downhill wheel.

Traction Assist is automatic and requires no operator input. When a wheel starts to slip, flow is automatically split between the front and rear wheels to minimize wheel slip and loss of traction.

Before stopping the engine, disengage all controls and change the throttle to the SLOW position. Changing the throttle to the SLOW position reduces high-engine speed, noise, and vibration. Turn the key to the OFF position to shut off the engine. Remove the key if you are leaving the operator's position.

Before transporting the machine, raise the cutting units and secure the transport latches (Figure 36).

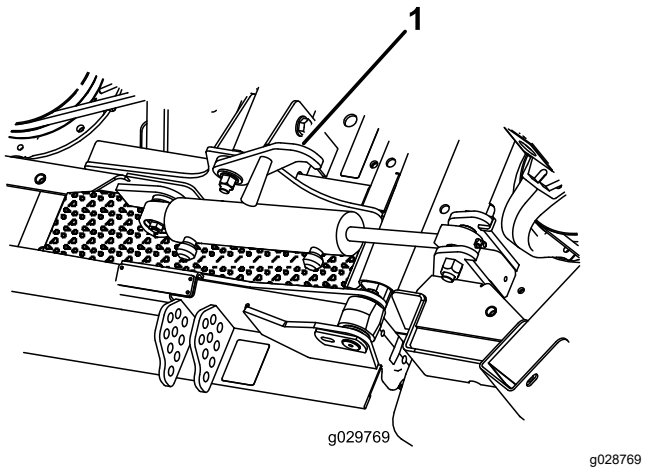

Figure 36

1. Transport latch (side cutting units)

Operating the Machine

- Start the engine and run it at the HALF IDLE position until it warms up. Move the engine-speed switch to HIGH IDLE, lift the cutting units, disengage the parking brake, press the forward traction pedal, and carefully drive to an open area.
- Practice moving forward and reverse, and starting and stopping the machine. To stop the machine, remove your foot from the traction pedal and let it return to NEUTRAL or press down on the reverse pedal.

  Note: When going downhill in the machine, you may need to use the reverse pedal to stop.
- Practice driving around obstacles with the cutting units up and down. Be careful when driving between narrow objects so that you do not damage the machine or cutting units.
- Always drive slowly in rough areas.
- If an obstacle is in the way, lift the cutting units to mow around it.
- When transporting the machine from 1 work area to another, raise the cutting units to the fully upward position, shut off the PTO, press the mow/transport switch to the TRANSPORT position, and place the throttle in the FAST position.

Understanding Counterbalance

The counterbalance system maintains hydraulic back pressure on the deck-lift cylinders. This pressure improves traction by transferring the mower-deck weight to the mower-drive wheels. The counterbalance pressure has been set at the factory

to an optimal balance of after-cut appearance and traction capability in most turf conditions.

Decreasing the counterbalance setting can produce a more stable cutting unit, but can decrease the traction capability. Increasing the counterbalance setting can increase the traction capability, but may result in a poor after-cut appearance. Refer to the machine *Service Manual* for your traction unit for instructions to adjust the counterbalance pressure.

Using the Brake Pedals

Important: **In emergency braking situations, remove your foot from the traction pedal and then press the brake pedals.**

In the low speed range only, you can use the brakes individually for turning or to improve traction. Perform the following when using the brakes individually:

- Disconnect the pedal-locking latch (Figure 4).
- For turning assist, press the corresponding brake pedal to the side you are turning. This allows a tighter turning radius.

  Note: Use the individual brakes carefully, especially on soft or wet grass, because the turf may be torn accidentally.
- For traction assist, apply light pressure to the brake pedal corresponding to the front tire that is slipping. For example, in some slope conditions, the uphill wheel slips and loses traction. If this situation occurs, press the uphill brake pedal gradually and intermittently until the uphill wheel stops slipping, This action increases the traction on the downhill wheel.

Understanding Toro Smart Power™

With Smart Power, the operator does not have to listen to the engine speed in heavy load conditions. Smart Power prevents the engine from bogging down in heavy cutting conditions by automatically controlling the machine speed and optimizing cutting performance.

Note: By default, the Smart Power feature is ON.

Performing a Fan-Reverse Operation

The machine-fan speed is controlled by the hydraulic-fluid temperature and engine-coolant temperature. When the hydraulic fluid or coolant reaches a certain temperature, a reverse fan cycle is automatically initiated. This cycle blows debris off the rear screen and lowers the engine-coolant and hydraulic-fluid temperatures.

You can complete a manually-initiated reverse cycle from the service menu or by simultaneously pressing the inner right and left buttons from a RUN SCREEN, when the fan icons show in the context menu. It is recommended that you manually reverse the fan before you leave the work area or enter the maintenance or storage area.

Note: When your request is recognized, there is a temporary screen (3-4 seconds) depicting a fan inside a rectangle. This means that your request was sent, but there are certain conditions that prevent the fan from being reversed.

Understanding Auto Idle

The machine is equipped with auto idle, which automatically idles the engine when all the following functions are not used for a pre-determined time as previously set in the InfoCenter.

- The traction pedal is returned to the NEUTRAL position.
- The PTO is disengaged.
- None of the lift switches are activated.

  When you initiate any of the above functions, the machine automatically returns to the previous throttle position.

Using the Cruise Control

The cruise-control switch locks in the pedal position to maintain the desired ground speed. Pressing the rear of the switch turns cruise control off, the middle position of the switch enables the cruise-control function, and the front of the switch sets the desired ground speed.

Note: Pressing the brake pedal or moving the traction pedal into the reverse position, for 1 second, shuts off the cruise control.

Starting the Engine

Important: **The fuel system automatically bleeds itself when any of the following situations occur:**

- Initial start up of a new machine.
- The engine has ceased running due to lack of fuel.
- Maintenance has been performed upon the fuel system components.

1. Remove your foot from the traction pedal and ensure that it is in neutral. Ensure that the parking brake is set.

2. Move the engine-speed switch to the LOW-IDLE position.
3. Turn the ignition key to the RUN position.

   Note: The glow-plug indicator illuminates.
4. When the glow indicator dims, turn the ignition key to the START position. Release the key immediately when the engine starts and allow it to return to the RUN position.

   Important: **Do not run the starter motor more than 30 seconds at a time or premature starter failure may result. If the engine fails to start after 30 seconds, turn the key to the OFF position, check the controls and procedures, wait 30 additional seconds, and repeat the starting procedure.**
5. Allow engine to warm up at mid speed (without load), then move the throttle control to the desired position.

Important: **Allow engine to idle for 5 minutes before shutting it off after a full-load operation. Failure to do so may lead to turbo-charger trouble.**

Shutting Off the Engine

Important: **Allow the engine to idle for 5 minutes before shutting it off after a full-load operation. This allows the turbocharger to cool down before shutting off the engine. Failure to do so may lead to turbocharger trouble.**

Note: Lower the cutting units to the ground whenever machine is parked. This relieves the hydraulic load from the system, prevents wear on system parts, and also prevents accidental lowering of the cutting units.

1. Move the throttle control backward to the SLOW position.
2. Move the PTO switch to the OFF position.
3. Engage the parking brake.
4. Rotate the ignition key to the OFF position.
5. Remove the key from the switch to prevent accidental starting.

Using the Engine-Speed Switch

The engine speed switch has 2 modes to change the engine speed. By momentarily tapping the switch, the engine speed can be increased or decreased in 100-rpm increments. By holding the switch down, the engine automatically moves to HIGH or LOW IDLE, depending on which side of the switch you press.

Adjusting the Mowing Speed

Supervisor (Protected Menu)

This feature allows the supervisor to set the maximum mowing speed in increments of 5% between 30 and 100%, at which the operator can mow (low range).

Operator

This feature allows the operator to adjust the maximum mowing speed (low range), within the supervisors pre-adjusted settings. When in the InfoCenter splash or main screen, press the middle button (icon) to adjust the speed.

Note: When switching between low and high ranges, the settings will transfer based on the previous setting. The settings are reset when the machine is turned off.

Note: You can also use this feature with cruise control.

Adjusting the Transport Speed

Supervisor (Protected Menu)

This feature allows the supervisor to set the maximum transport speed in increments of 5% between 30 and 100%, at which the operator can transport (high range).

Refer to Setting the Maximum Allowed Transport Speed (page 39) for the procedure to set the transport speed.

Operator

This feature allows the operator to adjust the maximum transport speed (high range) within the supervisors pre-adjusted settings. When in the InfoCenter splash or main screen, press the middle button (icon) to adjust the speed.

Note: When switching between low and high ranges, the settings transfer based on the previous setting. The settings are reset when the machine is turned off.

Note: You can also use this feature in conjunction with cruise control.

Understanding the Diesel-Particulate Filter and Regeneration

The diesel-particulate filter (DPF) removes soot from the engine exhaust.

The DPF regeneration process uses heat from the engine exhaust that is increased by the catalyst to reduce accumulated soot into ash.

To keep the DPF clean, remember the following:

- Run the engine at full engine speed when possible to promote DPF self-cleaning.
- Use the correct engine oil.
- Minimize the amount of time that you idle the engine.
- Use only ultra low sulfur diesel fuel.

Operate and maintain your machine with the function of the DPF in mind. Engine under load generally produces adequate exhaust temperature for DPF regeneration.

Important: **Minimize the amount of time that you idle the engine or operate the engine at low-engine speed to help reduce the accumulation of soot in the DPF.**

⚠ CAUTION

The exhaust temperature is hot (approximately 600°C (1,112°F) during DPF regeneration. Hot exhaust gas can harm you or other people.

- **Do not operate the engine in an enclosed area.**
- **Ensure that there are no flammable materials around the exhaust system.**
- **Ensure that the hot exhaust gas does not contact surfaces that may be damaged by heat.**
- **Do not touch a hot exhaust system component.**
- **Do not stand near or around the exhaust pipe of the machine.**

Understanding the Regeneration Icons

Icon	Icon Definition
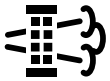	• Parked or recovery regeneration icon-regeneration is requested. • Perform the regeneration immediately.
	• A regeneration is acknowledged and the request is processing.
	• A regeneration is in progress and the exhaust temperature is elevated.
	• NOx control system malfunction; the machine requires service.

Types of Diesel Particulate Filter Regeneration

Types of diesel particulate filter regeneration that are performed while the machine is operating:

Type of Regeneration	Conditions that cause DPF regeneration	DPF description of operation
Passive	Occurs during normal operation of the machine at high-engine speed or highengine load	• The InfoCenter does not display an icon indicating passive regeneration. • During passive regeneration, the DPF processes high-heat exhaust gasses, oxidizing harmful emissions, and burning soot to ash.
Assist	Occurs because of low-engine speed, low-engine load, or after the computer detects the DPF is becoming obstructed with soot	•The InfoCenter does not display an icon indicating assist regeneration. • During assist regeneration, the engine computer adjusts the engine settings to raise the exhaust temperature.
Reset	Occurs every 100 hours Also occurs if normal engine operation surpasses the allowed soot accumulation amount within the filter	• When the high exhaust-temperature icon  is displayed in the InfoCenter, a regeneration is in progress. • During reset regeneration, the engine computer maintains an elevated engine speed to ensure filter regeneration.

Types of diesel particulate filter regeneration that require you to park the machine:

Type of Regeneration	Conditions that cause DPF regeneration	DPF description of operation
Parked	Occurs because the computer determines that the automatic DPF cleaning has not been sufficient. Also occurs because you initiate a parked regeneration May occur because the inhibit regen has been initiated and has disabled the automatic DPF cleaning from occuring May result from using the incorrect fuel or engine oil	• When the reset-standby/parked or recovery regeneration icon 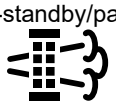 or a regeneration is requested. • Perform the parked regeneration as soon as possible to avoid needing a recovery regeneration. • A parked regeneration requires 30 to 60 minutes to complete. • You must have at least a 1/4 tank of fuel in the tank. • You must park the machine to perform a parked regeneration.
Recovery	Occurs because the request for parked recovery has been ignored, allowing the DPF to be critically plugged	• When the reset-standby/parked or recovery regeneration icon  a recovery regeneration is requested. • A recovery regeneration requires up to 3 hours to complete. • You must have at least a 1/2 tank of fuel in the machine. • You must park the machine to perform a recovery regeneration.

Using the DPF Regeneration Menus

Accessing the DPF Regeneration Menus

1. From the MAIN MENU, scroll down to SERVICE and press the select button.
2. In SERVICE, scroll to DPF REGENERATION and press the select button.
3. Select the regeneration function you need.

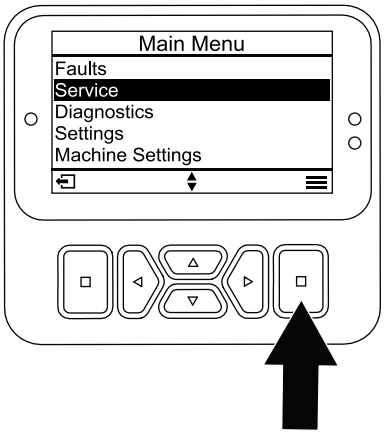

g483678

Figure 37

Time Since Last Regeneration

1. Access the DPF REGENERATION menu, and scroll to LAST REGEN.
2. Select the LAST REGEN entry.

3. Use the LAST REGEN field to determine how many hours you have run the engine since the last reset, parked, or recovery regeneration.
4. Select the back button to return to the DPF REGENERATION screen.

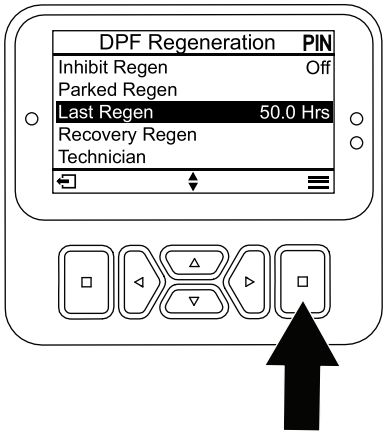

g483679

Figure 38

Setting the Inhibit Regen

Reset Regeneration Only

A reset regeneration produces elevated engine exhaust. If you are operating the machine around trees, brush, tall grass, or other temperature-sensitive plants or materials, you can use the INHIBIT REGEN setting to prevent the engine computer from performing a reset regeneration.

Note: The INHIBIT REGEN option is always used when maintenance is being performed on the machine in an enclosed area.

Note: If you set the InfoCenter to inhibit regeneration, the InfoCenter displays an advisory every 15 minutes while the engine requests a reset regeneration.

Important: **When you shut off the engine and start it again, the inhibit regen setting defaults to OFF.**

1. Access the DPF REGENERATION menu, and scroll down to INHIBIT REGEN.
2. Select the Inhibit REGEN entry.
3. Change the inhibit regeneration setting from OFF to ON.

Preparing to Perform a Parked or Recovery Regeneration

1. Ensure that the machine has fuel in the tank for the type of regeneration you are performing:
   - **Parked Regeneration:** Ensure that you have 1/4 tank of fuel before performing the parked regeneration.
   - **Recovery Regeneration:** Ensure that you have 1/2 tank of fuel before performing the recovery regeneration.
2. Move the machine outside to an area away from combustible materials or items that may be damaged by heat.
3. Park the machine on a level surface, move all controls to NEUTRAL, disengage the PTO, and lower the cutting units.
4. Engage the parking brake and allow the engine to reach low idle speed.

Performing a Parked or Recovery Regeneration

When a parked regeneration is requested by the engine computer, follow the messages on the InfoCenter.

Important: **The computer of the machine cancels DPF regeneration if you increase the engine speed from low idle or release the parking brake.**

1. Access the DPF REGENERATION menu, and scroll down to PARKED REGEN or RECOVERY REGEN.

2. Select the PARKED REGEN entry or the RECOVERY REGEN entry.

   Note: Initiating a recovery regeneration requires you to enter the correct PIN code.

3. At the REGEN PARAMETERS screen, verify that you have 1/4 tank of fuel if you are performing the parked regeneration or 1/2 tank of fuel if you are performing the recovery regeneration. Verify that the parking brake is engaged and the engine speed is set to low idle. Press the select button to continue.
4. At the INITIATE DPF REGEN screen, select the next button to continue.
5. The InfoCenter displays theINITIATE DPF REGEN message.

   Note: If needed, press the cancel icon to cancel the regeneration process.

6. The InfoCenter displays the time to complete message.
7. The InfoCenter displays the home screen and the regeneration acknowledge icon appears 

.

   Note: While the DPF regeneration runs, the InfoCenter displays the high exhaust-temperature icon 
.

8. When the engine computer completes a parked or recovery regeneration, the InfoCenter displays an advisory. Press any button to exit to the home screen.

   Note: If the regeneration fails to complete, follow the advisory and press any button to exit to the home screen.

Canceling a Parked or Recovery Regeneration

Use the PARKED REGEN CANCEL or RECOVERY REGEN CANCEL setting to cancel a running parked or recovery regeneration process.

1. Access the DPF REGENERATION menu, scroll to PARKED REGEN or RECOVERY REGEN.
2. Press the select button to cancel a Parked Regen or Recovery Regen.

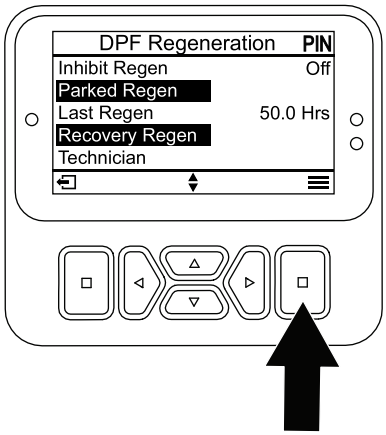

g483825

Figure 39

Operating Tips

Changing Mowing Patterns

Change mowing patterns often to minimize a poor after-cut appearance from repeatedly mowing in the same direction.

Resolving After-Cut Appearance

Refer to the *After-cut Appearance Troubleshooting Guide* available at www.Toro.com.

Using Proper Mowing Techniques

- To begin cutting, engage the cutting units, then approach the mowing area slowly.

- To achieve the professional straight-line cut and striping that is desirable for some applications, find a tree or other object in the distance and drive straight toward it.
- As soon as the front cutting units reach the edge of the mowing area, perform a teardrop-shaped turn to quickly line up for your next pass.
- Bolt-in mulching baffles are available for the cutting units. The mulching baffles perform well when you maintain turf on a regular schedule to avoid removing more than 25 mm (1 inch) of growth per cutting. When you cut too much growth with the mulching baffles installed, the after-cut appearance may deteriorate and the observed power to cut the turf increases. The mulching baffles also perform well for shredding leaves in the fall.

Selecting the Proper Height-of-Cut Setting to Suit Conditions

Remove no more than approximately 25 mm (1 inch), or 1/3 of the grass blade when cutting. In exceptionally lush and dense grass, you may need to raise your height-of-cut setting.

Mowing with Sharp Blades

A sharp blade cuts cleanly and without tearing or shredding the grass blades like a dull blade. Tearing and shredding causes the grass to turn brown at the edges, which impairs growth and increases susceptibility to diseases. Ensure that the blade is in good condition and that there is a full sail.

Checking the Condition of the Cutting Unit

Ensure that the cutting chambers are in good condition. Straighten any bends in the chamber components to ensure correct blade tip/chamber clearance.

Maintaining the Machine after Mowing

After mowing, thoroughly wash the machine with a garden hose with no nozzle to avoid contamination and damage to the seals and bearings caused by excessive water pressure. Ensure that the radiator and oil cooler are kept free of dirt or grass clippings. After cleaning, inspect the machine for possible hydraulic-fluid leaks, damage, or wear to the hydraulic and mechanical components, and check the cutting-unit blades for sharpness.

After Operation

General Safety

- Shut off the engine, remove the key, and wait for all movement to stop before you leave the operator's position. Allow the machine to cool before adjusting, servicing, cleaning, or storing it.
- Clean grass and debris from the cutting units, mufflers, and engine compartment to help prevent fires. Clean up oil or fuel spills.
- If the cutting units are in the transport position, use the positive mechanical lock (if available) before you leave the machine unattended.
- Allow the engine to cool before storing the machine in any enclosure.
- Remove the key and shut off the fuel (if equipped) before storing or hauling the machine.
- Never store the machine or fuel container where there is an open flame, spark, or pilot light, such as on a water heater or on other appliances.
- Maintain and clean the seat belt(s) as necessary

Pushing or Towing the Machine

In an emergency, you can move the machine forward by actuating the bypass valve in the variable-displacement hydraulic pump and pushing or towing the machine.

Important: **Do not push or tow the machine faster than 3 to 4.8 km/h (2 to 3 mph) If you push or tow at a faster speed, internal transmission damage may occur.**

The bypass valves must be open whenever you push or tow the machine.

1. Raise the seat and locate the bypass valves, which are located below the front of the fuel tank (Figure 40).

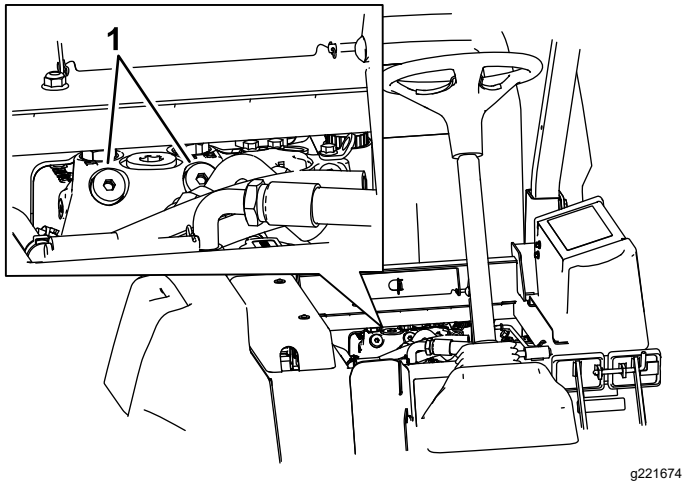

Figure 40

1. Bypass valve (2)

2. Rotate each valve 3 counter-clockwise turns to open and allow the fluid to bypass internally.

   Note: Do not open more than 3 turns. Because the fluid is bypassed, the machine can be slowly moved without damaging the transmission.

3. Push or tow the machine.
4. Finish pushing or towing the machine and close the bypass valves. Torque the valve to 70 N·m (52 ft-lb).

   Important: **Ensure that the bypass valve is closed before you start the engine. Running the engine with an open bypass valve causes the transmission to overheat.**

Important: **If you must push or tow the machine in reverse, bypass the check valve in the 4-wheel drive manifold.**

To bypass the check valve, connect a hose assembly to the reverse traction pressure test port (located on the hydrostat) and on the port located between ports M8 and P2 on the rear traction manifold (located behind the front tire). The hose assembly includes 1 hose (Part No. 95-8843), 2 coupler fittings (Part No. 95-0985), and 2 hydraulic fittings (Part No. 340-77).

Locating the Jacking Points

⚠ DANGER

Mechanical or hydraulic jacks may fail to support machine and cause a serious injury.

- **Use jack stands when supporting the machine.**
- **Do not use hydraulic jacks.**

There are jacking points located at the front and rear of the machine.

- On the frame at the inside of each front drive tire
- At the center of the rear axle

Hauling the Machine

- Remove the key and shut off the fuel (if equipped) before storing or hauling the machine.
- Use care when loading or unloading the machine into a trailer or a truck.
- Use full-width ramps for loading the machine into a trailer or a truck.
- Tie the machine down securely.

Locating the Tie-Down Points

There are tie downs located at the front and rear sides of the machine (Figure 41).

Note: Use properly-rated DOT-approved straps in 4 corners to tie down the machine.

- 2 on the front of the operator's platform
- Rear bumper

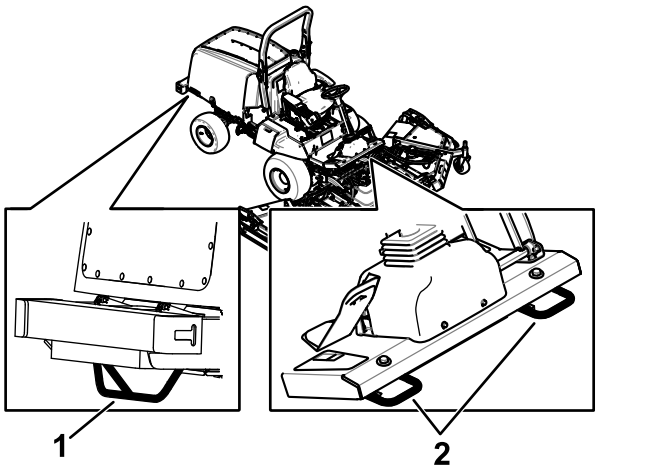

Figure 41

1. Rear tie-down point
2. Front tie-down points

Maintenance

Note: Determine the left and right sides of the machine from the normal operating position.

Important: **Refer to your engine owner's manual for additional maintenance procedures.**

Note: Download a free copy of the electrical or hydraulic schematic by visiting www.Toro.com and searching for your machine from the Manuals link on the home page.

Important: **If you are performing maintenance on the machine and run the engine with an engine exhaust-extraction duct, set the inhibit regen setting to On; refer to Setting the Inhibit Regen (page 47).**

Maintenance Safety

- Before you leave the operator's position, do the following:
  - Park the machine on a level surface.
  - Disengage the power takeoff and lower the attachments.
  - Engage the parking brake.
  - Shut off the engine and remove the key.
  - Wait for all movement to stop.
- If you leave the key in the switch, someone could accidently start the engine and seriously injure you or other bystanders. Remove the key from the switch before you perform any maintenance.
- Allow machine components to cool before performing maintenance.
- If the cutting units are in the transport position, use the positive mechanical lock (if equipped) before you leave the machine unattended.
- If possible, do not perform maintenance while the engine is running. Keep away from moving parts.
- Support the machine with jack stands whenever you work under the machine.
- Carefully release pressure from components with stored energy.
- Keep all parts of the machine in good working condition and all hardware tightened, especially blade-attachment hardware.
- Replace all worn or damaged decals.
- To ensure safe, optimal performance of the machine, use only genuine Toro replacement parts. Replacement parts made by other manufacturers could be dangerous, and such use could void the product warranty.

Recommended Maintenance Schedule(s)

Maintenance Service Interval	Maintenance Procedure
After the first hour	• Torque the wheel lug nuts.
After the first 10 hours	• Torque the wheel lug nuts. • Check the alternator-belt tension. • Check the compressor belt tension. • Check the blade-drive-belt tension.
After the first 50 hours	• Change the front planetary-gear oil.
After the first 200 hours	• Change the rear-axle lubricant.
Before each use or daily	• Check the tire pressure. • Check the safety-interlock switches. • Check the engine-oil level. • Check the air-cleaner indicator • Drain water or other contaminants from the fuel filter/water separator. • Check the coolant level. • Check the hydraulic-fluid level. • Remove all debris and chaff from the engine compartment, radiator and oil cooler. • Check the interlock-switch operation. • Clean the machine. • Clean and maintain the seat belt.

Maintenance Service Interval	Maintenance Procedure
Every 25 hours	• Check the electrolyte level (or every 30 days if the machine is in storage).
Every 50 hours	• Lubricate all bearings and bushings. • Inspect the air cleaner. • Check the condition of the battery. • Check the blade-drive-belt tension.
Every 100 hours	• Inspect the cooling-system hoses and clamps. • Check the alternator-belt tension. • Check the compressor belt tension.
Every 200 hours	• Torque the wheel lug nuts.
Every 250 hours	• Clean the cab air filters; replace them if they are torn or excessively dirty. • Clean the air-conditioning coil. (Clean more frequently in extremely dusty or dirty conditions)
Every 400 hours	• Service the air cleaner (earlier if the air cleaner indicator shows red, and more frequently in extremely dirty or dusty conditions). • Inspect the fuel lines and connections. • Replace the fuel-filter canister. • Replace the engine fuel filter. • Check the planetary-gear-drive oil level (check if you notice external leakage). • Check for end-play in the planetary drives. • Check the rear-axle lubricant. • Check the rear-axle-gearbox lubricant.
Every 500 hours	• Change the engine oil and filter.
Every 800 hours	• Change the front planetary-gear oil • Change the rear-axle lubricant. • Check the rear wheel toe-in. • Inspect the blade-drive belt. • If you are not using the recommended hydraulic fluid or have ever filled the reservoir with an alternative fluid, change the hydraulic fluid. • If you are not using the recommended hydraulic fluid or have ever filled the reservoir with an alternative fluid, replace the hydraulic filter (sooner if the service interval indicator is in the red zone). • Inspect the cutting unit caster-wheel assemblies.
Every 1,000 hours	• Drain and clean the fuel tank. • If you are using the recommended hydraulic fluid, replace the hydraulic filter (sooner if the service interval indicator is in the red zone). • Check and adjust the valve clearance.
Every 2,000 hours	• If you are using the recommended hydraulic fluid, change the hydraulic fluid.
Every 3,000 hours	• Disassemble, clean, and assemble the soot filter of the DPF. or clean the soot filter if engine faults SPN 3720 FMI 16 or SPN 3720 FMI 0 display in the InfoCenter.
Before storage	• Drain and clean the fuel tank.
Every 2 years	• Flush the cooling system and replace the fluid. • Drain and flush the hydraulic tank. • Replace moving hoses.

⚠ CAUTION

If you leave the key in the ignition switch, someone could accidently start the engine and seriously injure you or other bystanders.

Remove the key from the ignition before you do any maintenance.

Daily Maintenance Checklist

Duplicate this page for routine use.

Maintenance Check Item	For the week of:						
	Monday	**Tuesday**	**Wednesday**	**Thursday**	**Friday**	**Saturday**	**Sunday**
Check the safety-interlock operation.							
Check the brake operation.							
Check the engine-oil level.							
Check the cooling-system-fluid level.							
Drain the water/fuel separator.							
Check the air filter, dust cup, and burp valve.							
Check for unusual engine noises.[1]							
Check the radiator and screen for debris							
Check for unusual operating noises.							
Check the hydraulic-fluid level.							
Check the hydraulic hoses for damage.							
Check for fluid leaks.							
Check the fuel level.							
Check the tire pressure.							
Check the instrument operation.							
Check the height-of-cut adjustment.							
Lubricate all the grease fittings.[2]							
Clean the machine.							
Touch up any damaged paint.							

[1]Check the glow plug and injector nozzles if starting is hard, there is excess smoke, or rough running is noted.

[2]Immediately **after every** washing, regardless of the interval listed.

Important: **Refer to your engine operator's manual for additional maintenance procedures.**

Notation for Areas of Concern

Inspection performed by:		
Item	**Date**	**Information**

Opening the Hood

1. Close the rear window of the cab (Figure 42).

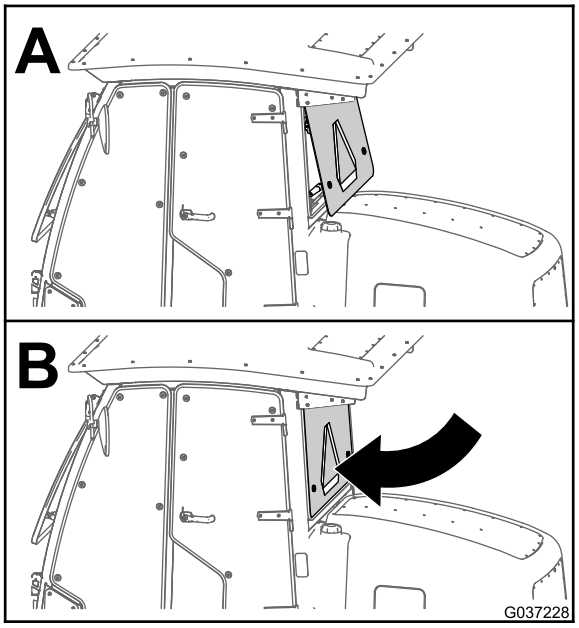

Figure 42

2. Release the 2 latches at the forward lower corners of the hood (Figure 43).

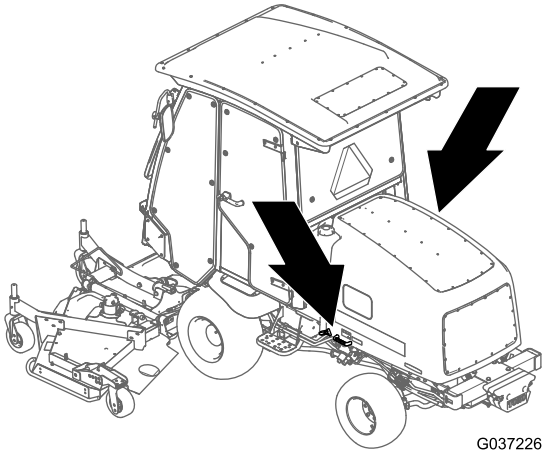

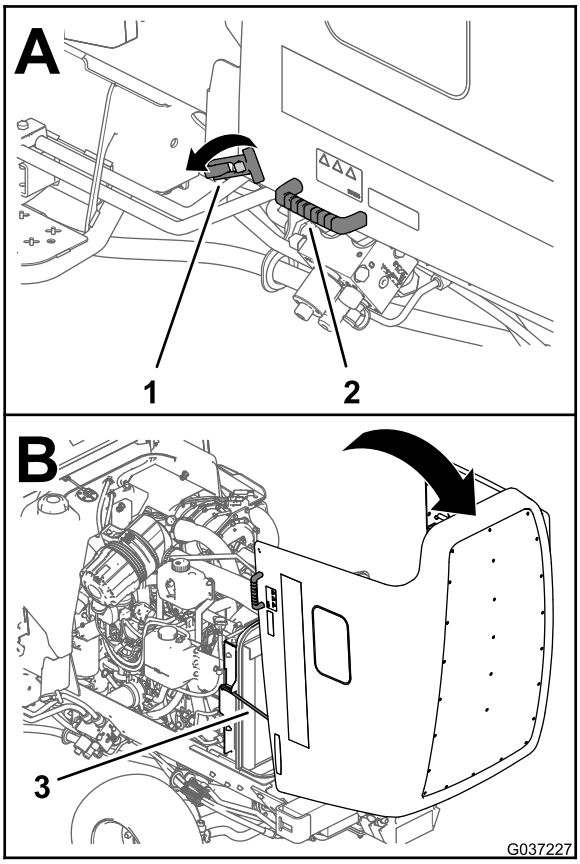

Figure 43

1. Hood latch
2. Handle
3. Prop rod

3. Using the handles that are adjacent to the latches, lift up and back the hood until the 2 prop rods are seated in the 2 rod brackets (Figure 43).

Removing the Hood

1. Unlatch and raise the hood.
2. Remove the hairpin cotter securing the hood pivot to the mounting brackets (Figure 44).

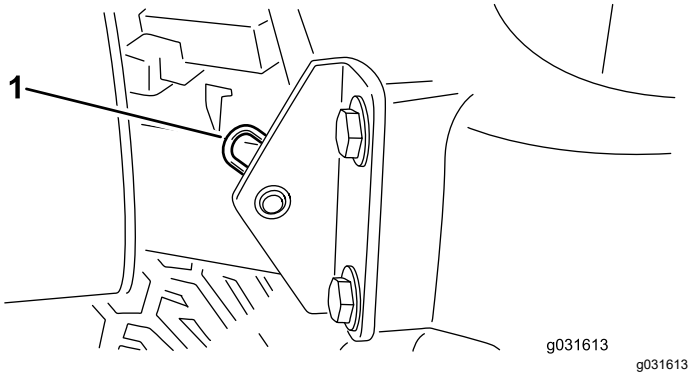

Figure 44

1. Hairpin cotter

3. Slide the hood to the right side, lift the other side, and pull it out of the brackets.

Note: Reverse this procedure to install the hood.

Lubrication

Greasing the Bearings and Bushings

Service Interval: Every 50 hours

The machine has grease fittings that you must lubricate regularly with No. 2 lithium grease. Also, lubricate the machine immediately after every washing.

The grease-fitting locations and quantities are:

Traction Unit

- 2 brake pedal pivot-shaft bearings (Figure 45)
- 2 front and rear-axle-pivot bushings (Figure 46)
- 2 steering-cylinder-ball joints (Figure 47)
- 2 tie-rod-ball joints (Figure 47)
- 2 king-pin bushings (Figure 47).

Note: Lubricate only the top fitting on the king pin annually (2 pumps).

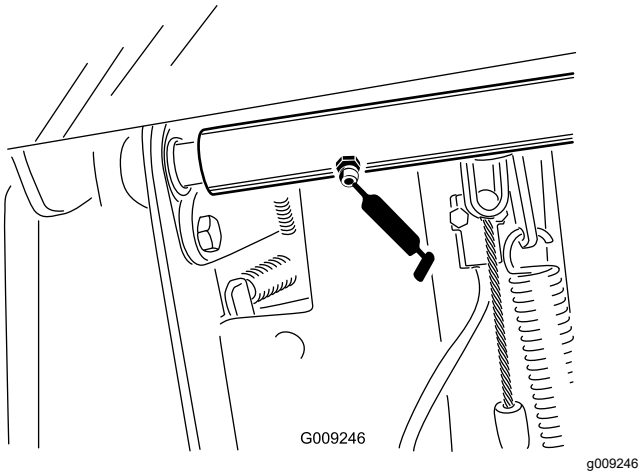

Figure 45

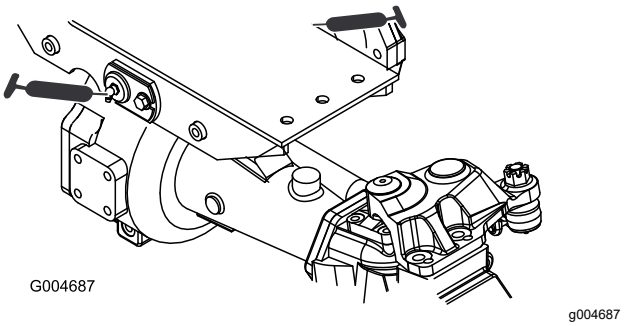

Figure 46

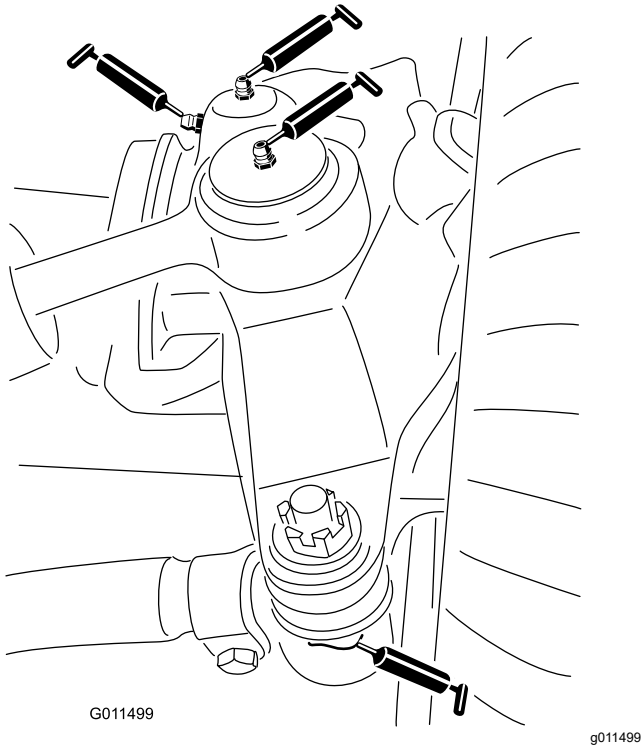

Figure 47

Center Cutting Unit

Note: You may need to raise the cutting unit to expose the grease fittings for the latch pivot and the lower link.

- 2 latch pivots (Figure 49)

  Note: You may need to manually trip the latches to gain access to the grease fittings (Figure 48). Use a pry bar to close and open the latch.

- 2 caster-fork-shaft bushings (Figure 50)
- 3 spindle-shaft bearings—located under the pulley (Figure 51)
- 2 idler-arm-pivot bushings (Figure 51)

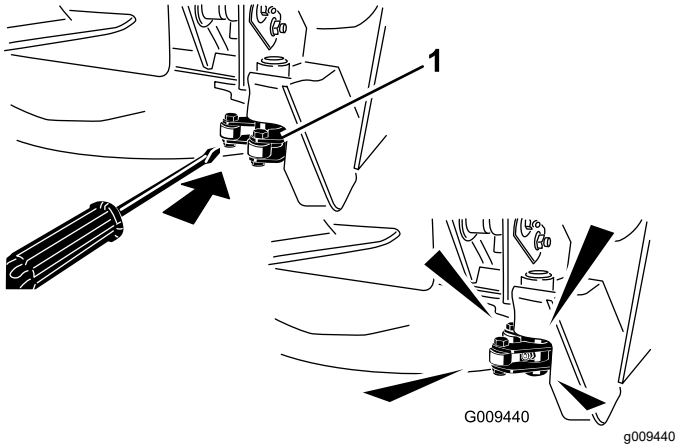

Figure 48

1. Latch

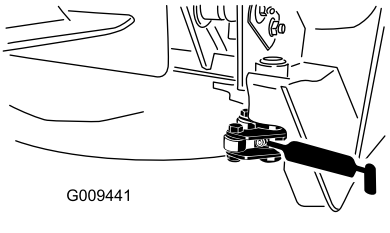

Figure 49

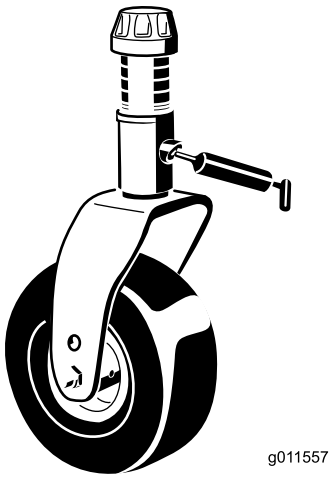

Figure 50

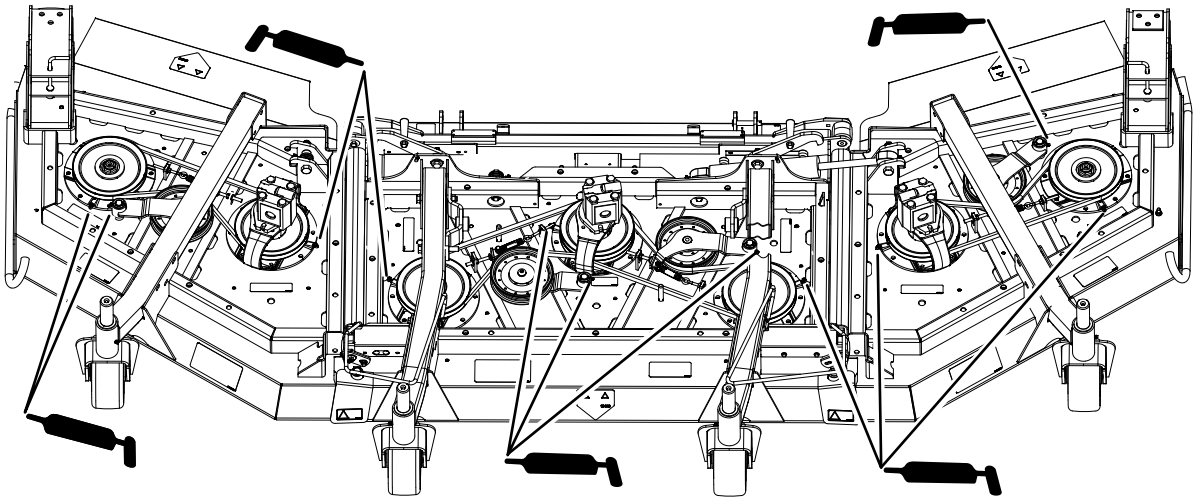

g244640

Figure 51

Center-Deck-Lift Assemblies

- 2 (each side) lift-arm-cylinder bushings (Figure 52)
- 2 lift-arm ball joints (Figure 53)

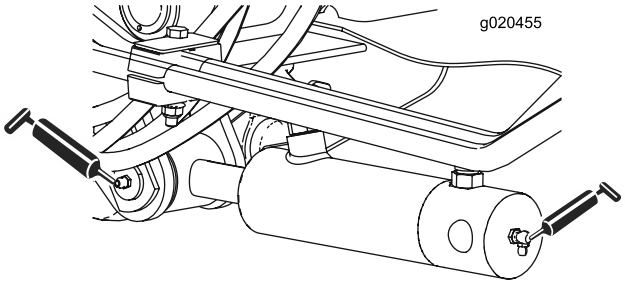

g020455

Figure 52

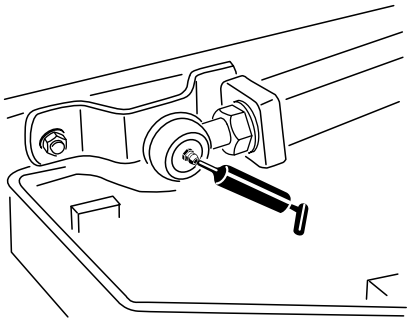

g011551

g011551

Figure 53

Wing-Deck-Lift Assemblies

The 4 wing deck-lift cylinder (Figure 54)

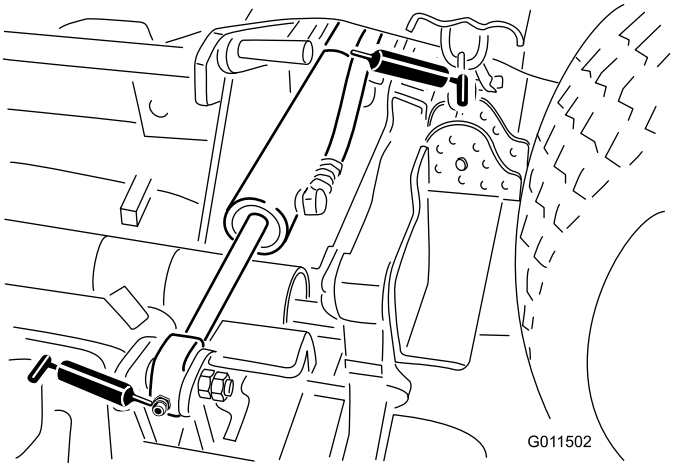

g011502

Figure 54

Wing Cutting Units

- 1 caster-fork-shaft bushing (Figure 55)
- 2 (each side) spindle-shaft bearings—located under the pulley
- 1 idler-arm-pivot bushings—located on the idler arm

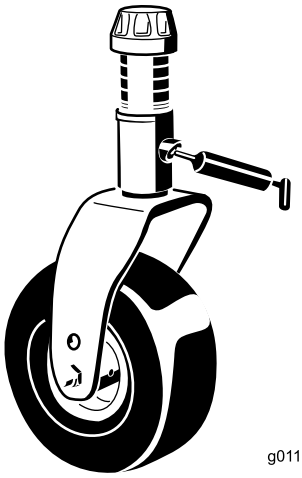

g011557

Figure 55

Engine Maintenance

Engine Safety

- Shut off the engine and remove the key before checking the oil or adding oil to the crankcase.
- Do not change the governor speed or overspeed the engine.

Servicing the Engine Oil

Oil Specification

Use high-quality, low-ash engine oil that meets or exceeds the following specifications:

- API service category CJ-4 or higher
- ACEA service category E6
- JASO service category DH-2

Important: **Using engine oil other than API CJ-4 or higher, ACEA E6, or JASO DH-2 may cause the diesel particulate filter to plug or cause engine damage.**

Use the following engine oil viscosity grade:

- Preferred oil: SAE 15W-40 (above 0°F)
- Alternate oil: SAE 10W-30 or 5W-30 (all temperatures)

Toro Premium Engine Oil is available from your authorized Toro distributor in either 15W-40 or 10W-30 viscosity grades. See the *Parts Catalog* for part numbers.

Checking the Engine-Oil Level

Service Interval: Before each use or daily

The engine is shipped with oil in the crankcase; however, the oil level must be checked before and after the engine is first started.

Important: **Check the engine oil daily. If the engine-oil level is above the Full mark on the dipstick, the engine oil may be diluted with fuel; If the engine oil level is above the Full mark, change the engine oil.**

The best time to check the engine oil is when the engine is cool before it has been started for the day. If it has already been run, allow the oil to drain back down to the sump for at least 10 minutes before checking. If the oil level is at or below the Add mark on the dipstick, add oil to bring the oil level to the Full mark. **Do not overfill the engine with oil**.

Important: **Keep the engine-oil level between the upper and lower limits on the dipstick; the engine may fail if you run it with too much or too little oil.**

Check the engine-oil level; refer to Figure 56.

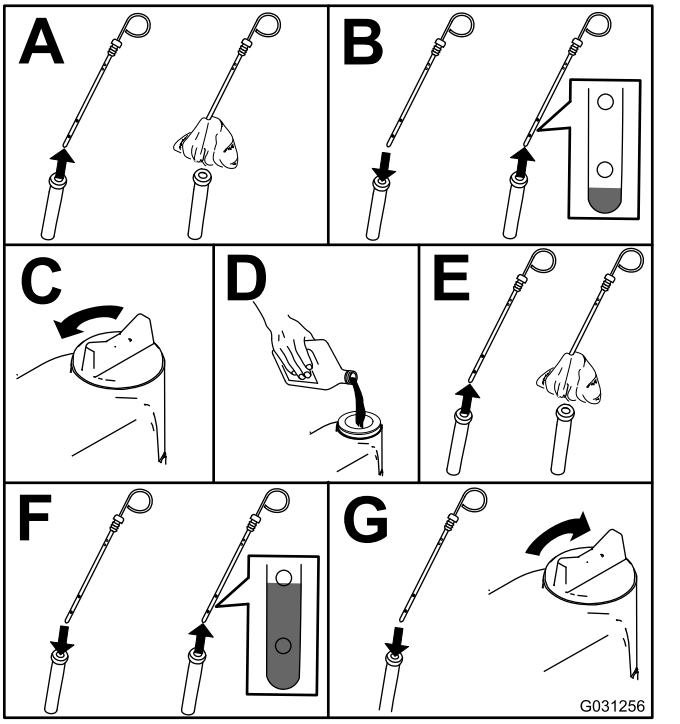

g031256

Figure 56

Note: When using different oil, drain all old oil from the crankcase before adding new oil.

Crankcase Oil Capacity

Approximately 5.7 L (6 US qt) with the filter.

Changing the Engine Oil and Filter

Service Interval: Every 500 hours

1. Start the engine and let it run 5 minutes to allow the oil to warm up.
2. With the machine parked on a level surface, shut off the engine, remove the key, and wait for all moving parts to stop before leaving the operating position.
3. Replace the engine oil and filter (Figure 57).

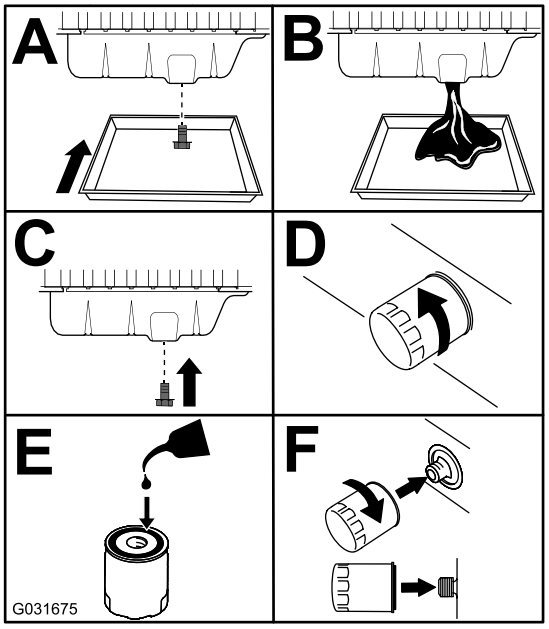

g031675

Figure 57

4. Add oil to the crankcase.
5. Set the service due timer in the InfoCenter; refer to Setting the Service Due Timer (page 38).

Servicing the Air Cleaner

Service Interval: Before each use or daily—Check the air-cleaner indicator

Every 50 hours—Inspect the air cleaner.

Every 400 hours—Service the air cleaner (earlier if the air cleaner indicator shows red, and more frequently in extremely dirty or dusty conditions).

Check the air-cleaner body for damage, which could cause an air leak. Replace it if it is damaged. Check the whole intake system for leaks, damage, or loose hose clamps.

Service the air-cleaner filter only when the service indicator requires it (Figure 58). Changing the air filter before it is necessary only increases the chance of dirt entering the engine when you remove the filter.

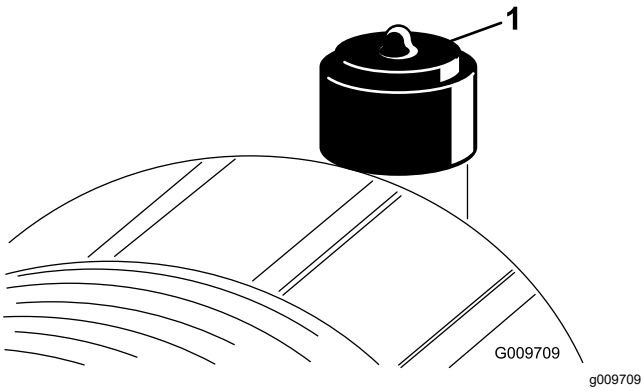

Figure 58

1. Air-cleaner indicator

Important: **Be sure that the cover is seated correctly and seals with the air-cleaner body.**

1. Replace the air cleaner (Figure 59).

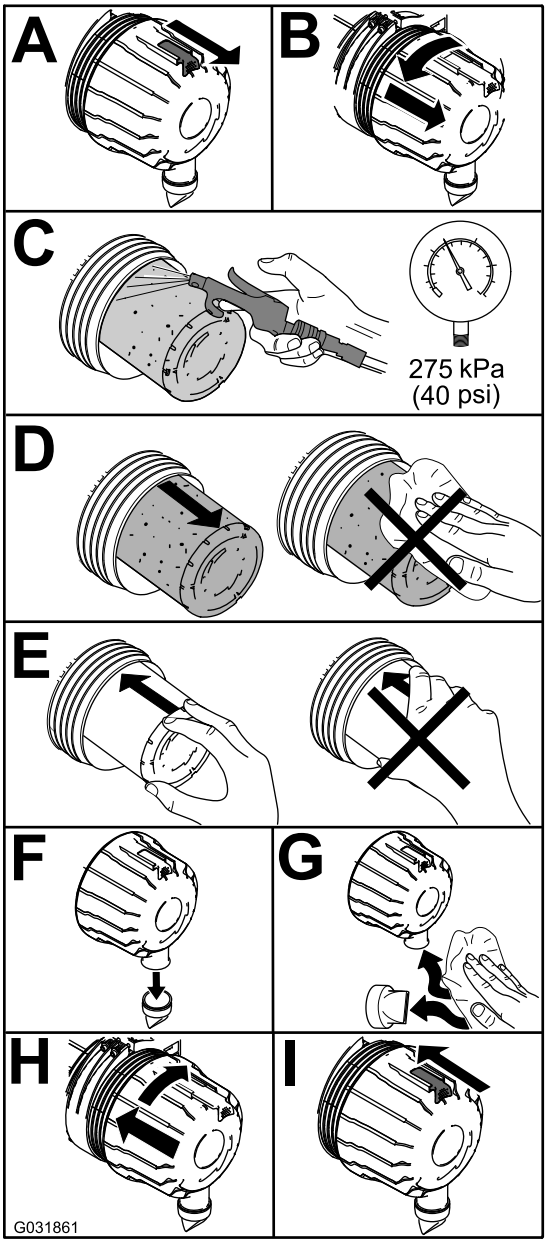

Figure 59

Note: Do not clean the used element due to the possibility of damage to the filter media.

Important: **Never attempt to clean the safety filter (Figure 60). Replace the safety filter after every 3 primary filter services.**

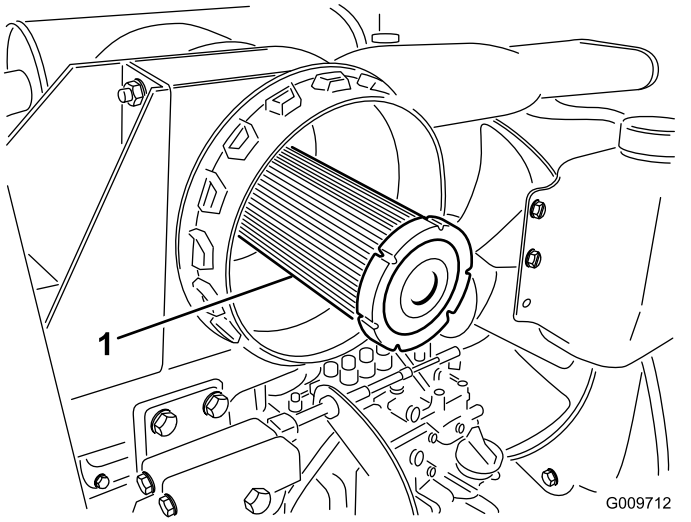

g009712

Figure 60

1. Air-cleaner safety filter

2. Reset the indicator (Figure 58) if it shows red.

Servicing the Diesel-Oxidation Catalyst (DOC) and the Soot Filter

Service Interval: Every 3,000 hours or clean the soot filter if engine faults SPN 3720 FMI 16 or SPN 3720 FMI 0 display in the InfoCenter.

If engine faults CHECK ENGINE SPN 3251 FMI 0, CHECK ENGINE SPN 3720 FMI 0, or CHECK ENGINE SPN 3720 FMI 16in the InfoCenter (Figure 61) display in the InfoCenter, clean the soot filter using the steps that follow:

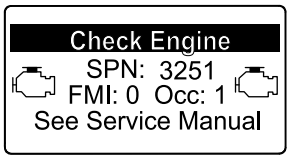

g214715

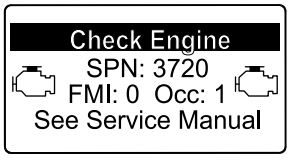

g213864

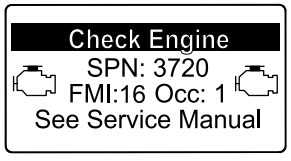

g213863

Figure 61

1. Refer to the Engine section in the *Service Manual* for information on disassembling and assembling the diesel-oxidation catalyst and the soot filter of the DPF.
2. Refer to your authorized Toro distributor for diesel-oxidation catalyst and the soot filter replacement parts or service.
3. Contact your authorized Toro distributor to have them reset the engine ECU after you install a clean DPF.

Fuel System Maintenance

Servicing the Fuel System

Draining the Fuel Tank

Service Interval: Every 1,000 hours—Drain and clean the fuel tank.

Before storage—Drain and clean the fuel tank.

In addition to the listed service interval, drain and clean the tank if the fuel system becomes contaminated or if you are storing the machine for an extended period. Use clean fuel to flush out the tank.

Inspecting the Fuel Lines and Connections

Service Interval: Every 400 hours/Yearly (whichever comes first)

Inspect the fuel lines for deterioration, damage, or loose connections.

Servicing the Water Separator

Service Interval: Before each use or daily—Drain water or other contaminants from the fuel filter/water separator.

Every 400 hours—Replace the fuel-filter canister.

Service the water separator as shown in Figure 62.

After replacing the water separator, turn the key to ON for 10 seconds, but do not start the engine. Turn the key off and repeat this 2 more times.

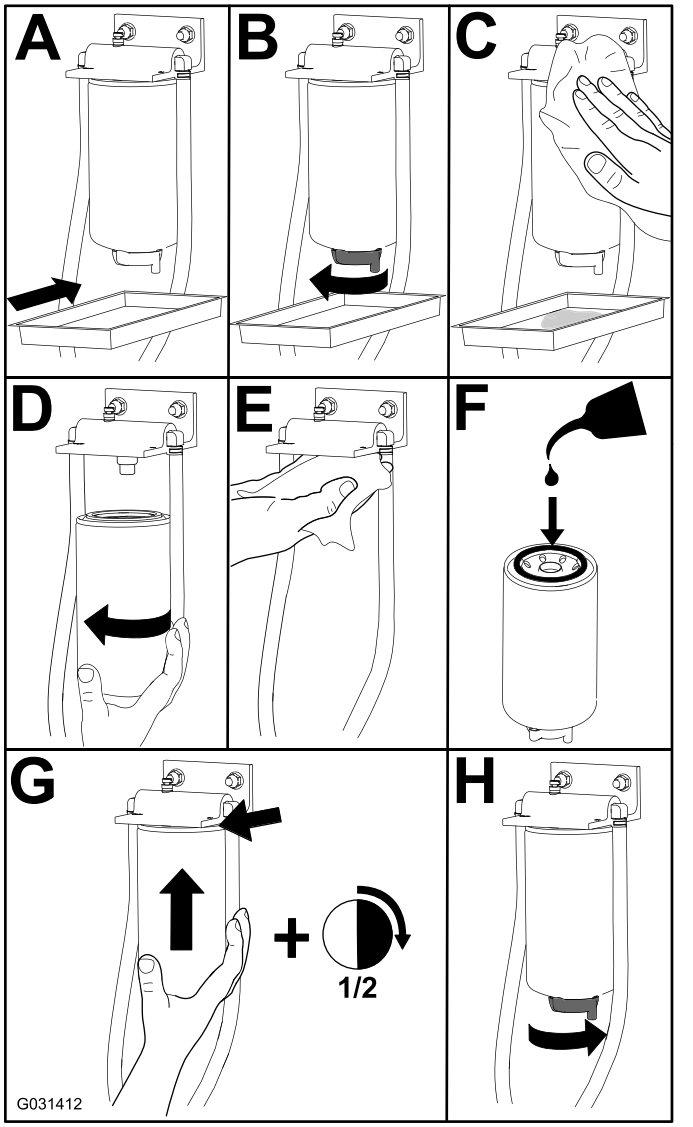

g031412

Figure 62

Servicing the Fuel Filter

Service Interval: Every 400 hours

1. Clean the area around the fuel-filter head (Figure 63).

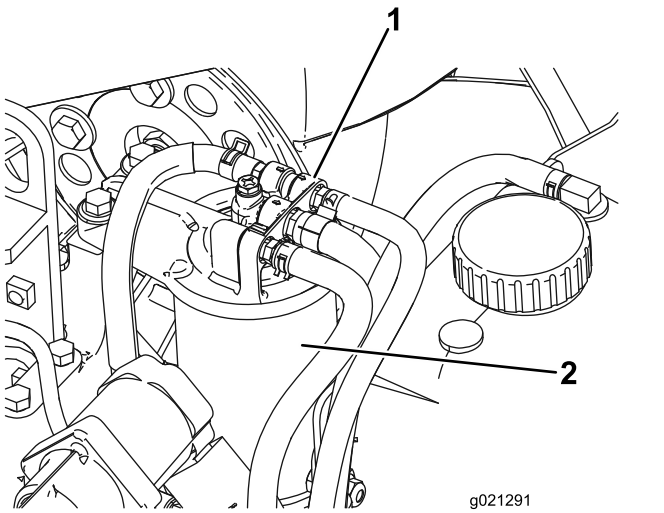

Figure 63

1. Fuel-filter head
2. Fuel filter

2. Remove the filter and clean the filter head mounting surface (Figure 63).
3. Lubricate the filter gasket with clean lubricating engine oil; refer to the engine owner's manual for additional information.
4. Install the dry filter canister by hand until the gasket contacts the filter head, then rotate it an additional 1/2 turn.
5. Prime the fuel system to purge any air; refer to Priming the Fuel System (page 63).

Priming the Fuel System

Prime the fuel system before starting the engine for the first time, after running out of fuel, or after fuel system maintenance (e.g., draining the filter/water separator, replacing a fuel hose).

To prime the fuel system, perform the following steps:

1. Ensure that fuel is in the fuel tank.
2. Perform the following steps to prime the filter and the lines to the high pressure pump to prevent wear or damage to the pump:
   A. Cycle the key to the ON position for 15 to 20 seconds.
   B. Cycle the key to the OFF position for 30 to 40 seconds.

      Note: This allows the ECU to power down.
   C. Cycle the key to the ON position for 15 to 20 seconds.
   D. Inspect for leaks around the filter and hoses.

Important: **Do not use the engine starter motor to crank the engine to prime the fuel system.**

Electrical System Maintenance

Electrical System Safety

- Disconnect the battery before repairing the machine. Disconnect the negative terminal first and the positive last. Connect the positive terminal first and the negative last.
- Charge the battery in an open, well-ventilated area, away from sparks and flames. Unplug the charger before connecting or disconnecting the battery. Wear protective clothing and use insulated tools.

Servicing the Battery

Service Interval: Every 25 hours—Check the electrolyte level (or every 30 days if the machine is in storage).

Every 50 hours—Check the condition of the battery.

Important: **Before welding on the machine, disconnect the negative cable from the battery to prevent damage to the electrical system.**

Note: Keep the terminals and the entire battery case clean because a dirty battery discharges slowly. To clean the battery, wash the entire case with a solution of baking soda and water. Rinse with clear water. Coat the battery posts and cable connectors with Grafo 112X (skin-over) grease (Toro Part No. 505-47) or petroleum jelly to prevent corrosion.

1. Open the battery cover on the side of the shroud (Figure 64).

   Note: Press down on the flat surface above the battery cover to ease the removal of the cover (Figure 64).

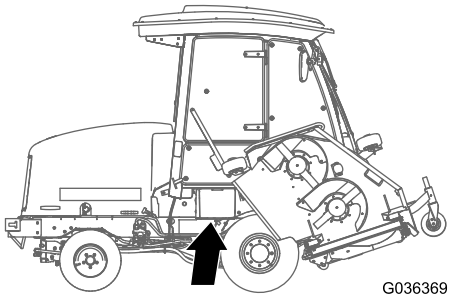

Figure 64

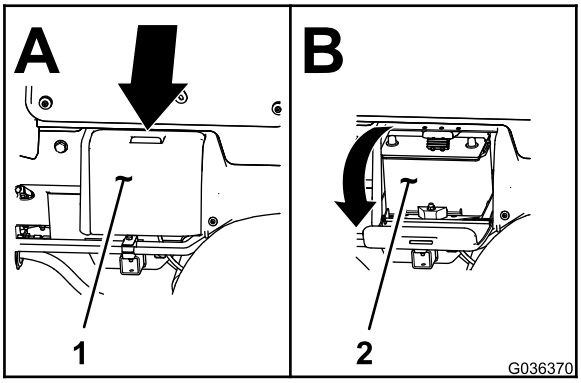

g036370

Figure 65

1. Battery cover
2. Battery

2. Remove the rubber boot from the positive terminal and inspect the battery.

⚠ WARNING

Battery terminals or metal tools could short against metal components causing sparks. Sparks can cause the battery gasses to explode, resulting in personal injury.

- **When removing or installing the battery, do not allow the battery terminals to touch any metal parts of the machine.**
- **Do not allow metal tools to short between the battery terminals and metal parts of the machine.**

⚠ WARNING

Incorrect battery cable routing could damage the machine and cables causing sparks. Sparks can cause the battery gasses to explode, resulting in personal injury.

- **Always *disconnect* the negative (black) battery cable before disconnecting the positive (red) cable.**
- **Always *connect* the positive (red) battery cable before connecting the negative (black) cable.**

3. Coat both battery connections with Grafo 112X (skin-over) grease (Toro Part No. 505-47), petroleum jelly, or light grease to prevent corrosion.
4. Slide the rubber boot over the positive terminal.
5. Close the battery cover.

Locating the Fuses

The traction-unit fuses are located under the power-center cover (Figure 66, Figure 67, and Figure 68).

Remove the 2 screws securing the power-center cover to the frame and remove the cover (Figure 66).

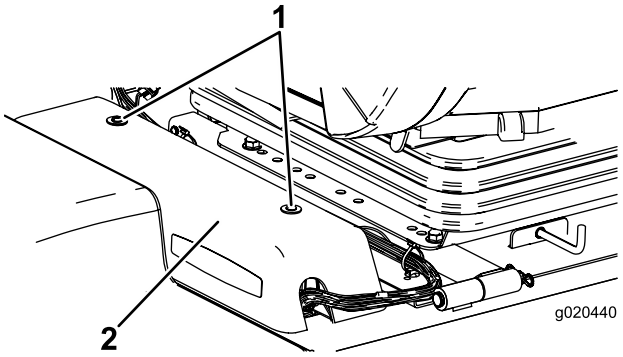

g020440

Figure 66

1. Power-center cover
2. Screws

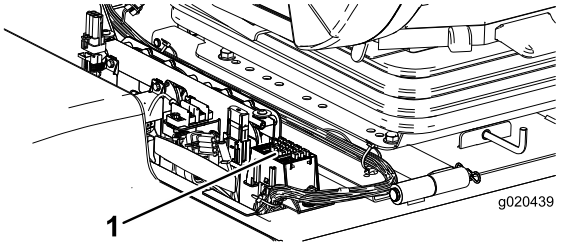

g020439

Figure 67

1. Fuses

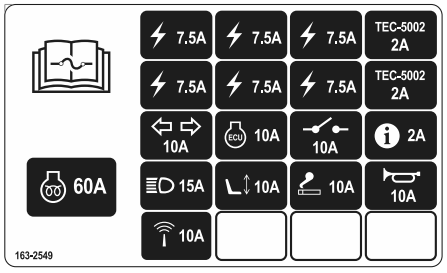

g542303

Figure 68

The cab fuses are located in the fuse box in the cab headliner (Figure 69 and Figure 70).

Note: Cab model only

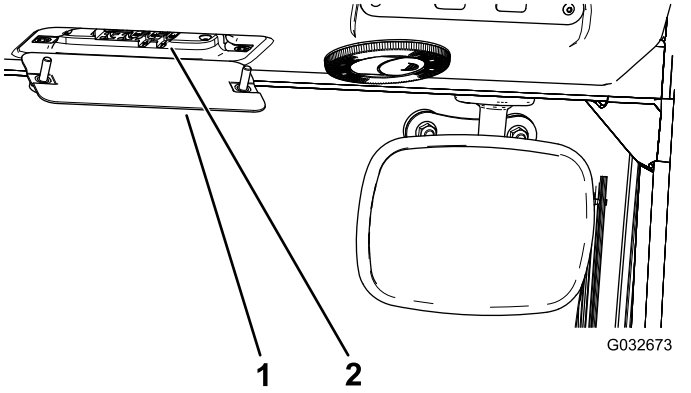

Figure 69

1. Cab fuse box
2. Fuses

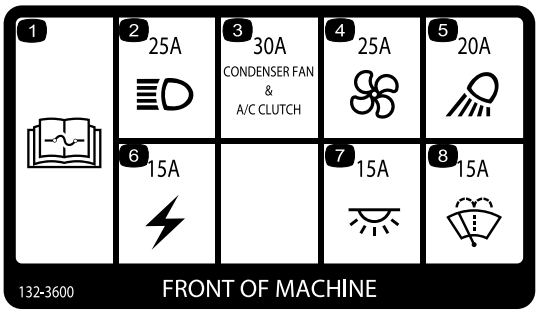

Figure 70

Drive System Maintenance

Adjusting the Traction-Pedal Angle

1. Loosen the 2 nuts and bolts securing the left side of the traction pedal to the bracket (Figure 71).

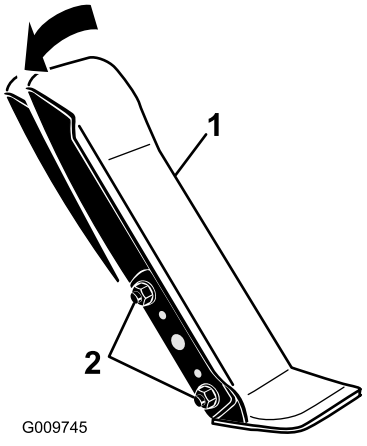

Figure 71

1. Traction pedal
2. Mounting nuts and bolts

2. Pivot the pedal to the desired operating angle and tighten the nuts (Figure 71).

Checking the Planetary-Gear-Drive Oil

Service Interval: Every 400 hours—Check the planetary-gear-drive oil level (check if you notice external leakage).

Every 400 hours—Check for end-play in the planetary drives.

Use high quality SAE 85W-140 gear lube as a replacement.

1. With machine on level surface, position the wheel so 1 check plug is at the 12 o'clock position and the other is at 3 o'clock position (Figure 72).

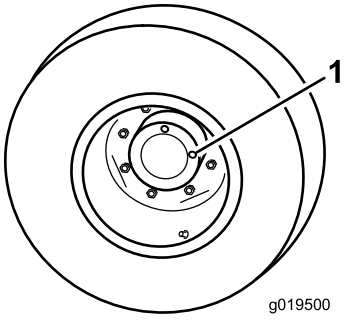

g019500

Figure 72

1. Check/drain plug (2)

2. Remove the plug at the 3 o'clock position (Figure 72).

   Note: The oil level should be at the bottom of the check-plug hole.

3. If the oil level is low, remove the plug at the 12 o'clock position and add oil until it begins to flow out of the hole at the 3 o'clock position.

4. Install both plugs.

Changing the Planetary-Gear-Drive Oil

Service Interval: After the first 50 hours

Every 800 hours/Yearly (whichever comes first)

Use a high-quality, SAE 85W-140 gear lube.

1. With the machine on a level surface, position a wheel so a check plug is at the lowest (6 o'clock) position (Figure 73).

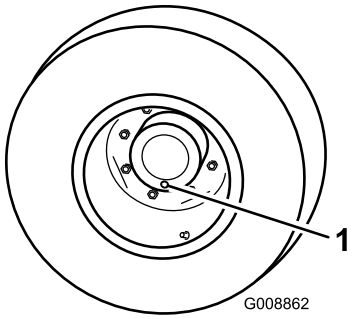

g008862

Figure 73

1. Check/drain plug

2. Place a drain pan under the planetary hub, remove the plug, and allow the oil to drain.

3. Place a drain pan under the brake housing, remove the drain plug, and allow the oil to drain (Figure 74).

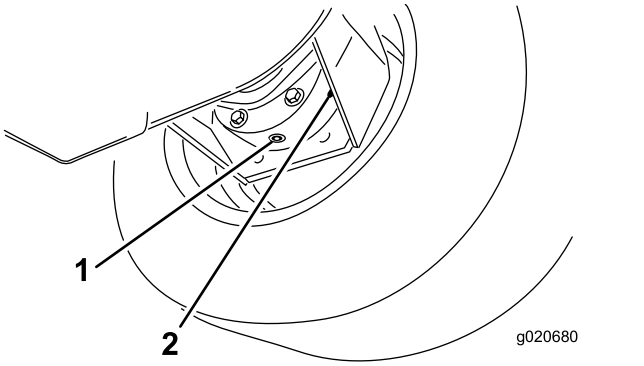

g020680

Figure 74

1. Drain plug
2. Brake housing

4. When all of the oil has drained from both locations, install the plug in the brake housing.

5. Rotate the wheel until the open plug hole in the planetary is at the 12 o'clock position.

6. Through the open hole, slowly fill the planetary with 0.65 L (22 fl oz) of high quality SAE 85W-140 gear lube.

   Important: **If the planetary fills before the 0.65 L (22 fl oz) of oil is added, wait 1 hour or install the plug and move the machine approximately 3 m (10 ft) to distribute the oil through the brake system. Then, remove the plug and add the remaining oil.**

7. Install the plug.

8. Repeat the procedure on the opposite planetary/brake assembly.

Checking the Rear-Axle Lubricant

Service Interval: Every 400 hours

The rear axle is filled with SAE 85W-140 gear lube. Check the lubricant level before you first start the engine and as recommended. The capacity is 2.4 L (80 fl oz). Visually inspect for leaks daily.

1. Position the machine on a level surface.

2. Remove a check plug from the end of the axle and ensure that the lubricant is up to the bottom of the hole (Figure 75).

   Note: If the level is low, remove the fill plug and add enough lubricant to bring the level up to the bottom of the check-plug holes.

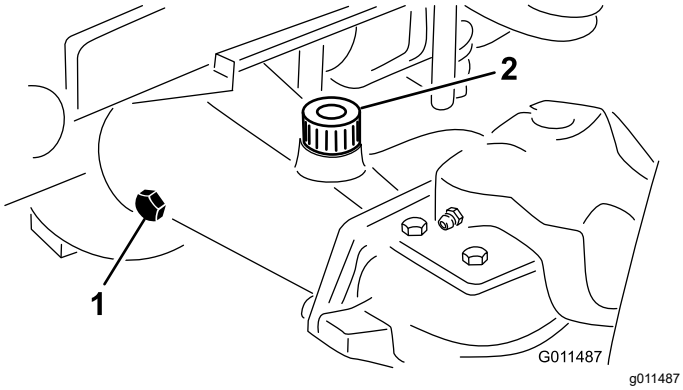

Figure 75

1. Check plug
2. Fill plug

Checking the Rear-Axle-Gearbox Lubricant

Service Interval: Every 400 hours

The gearbox is filled with SAE 85W-140 gear lube. The capacity is 0.5 L (16 fl oz). Visually inspect for leaks daily.

1. Position the machine on a level surface.
2. Remove the check/fill plug from the left side of the gearbox and ensure that lubricant is up to the bottom of the hole (Figure 76).

   Note: If the level is low, add enough lubricant to bring the level up to the bottom of the hole.

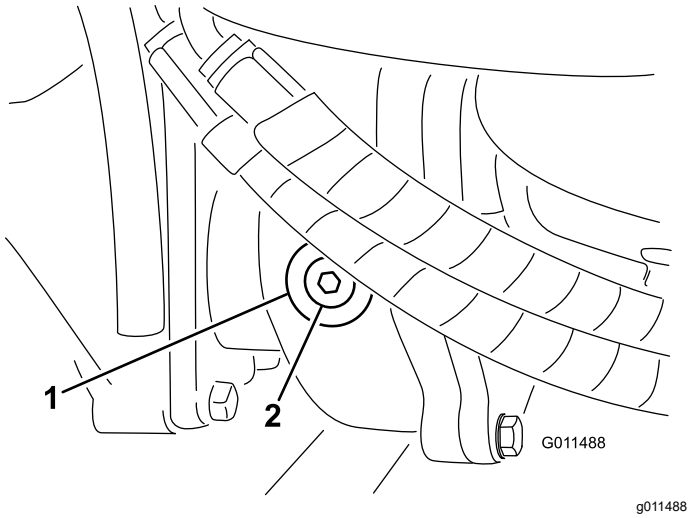

Figure 76

1. Gearbox
2. Check/fill plug

Changing the Rear-Axle Lubricant

Service Interval: After the first 200 hours
Every 800 hours

1. Position the machine on a level surface.
2. Clean the area around the 3 drain plugs; 1 on each end and 1 in the center (Figure 77).
3. Remove the check plugs to ease in the draining of the oil.
4. Remove the drain plugs and allow the oil to drain into the pans.

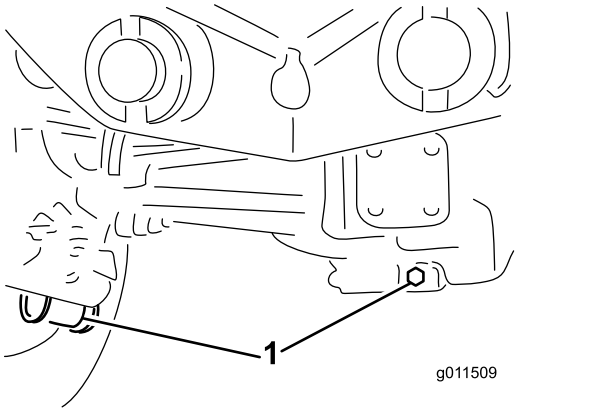

Figure 77

1. Drain-plug location

5. Clean the area around the drain plug at the bottom of the gearbox (Figure 78).
6. Remove the drain plug from the gearbox and allow the oil to drain into a pan.

   Note: Remove the fill plug to ease in the draining of the oil.

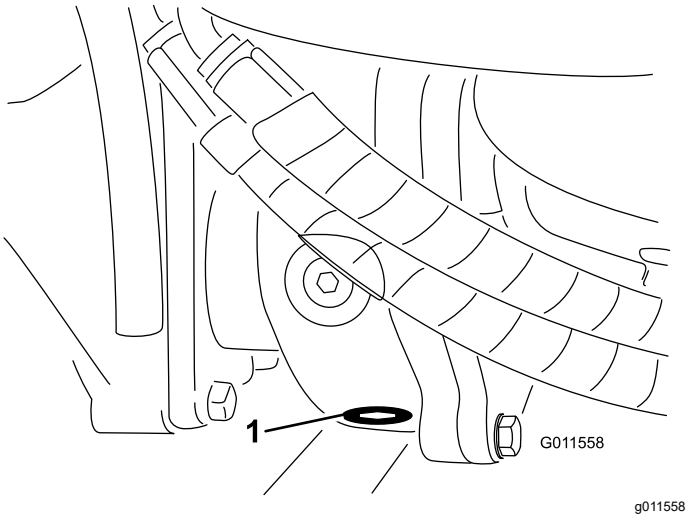

Figure 78

1. Drain plug

7. Add enough oil to bring the level up to the bottom of the check plug holes; refer to Changing the Rear-Axle Lubricant (page 67), and Checking the Rear-Axle-Gearbox Lubricant (page 67).
8. Install the plugs.

Checking the Rear Wheel Toe-In

Service Interval: Every 800 hours

1. Measure the center-to-center distance (at axle height) at the front and rear of the steering tires.

   Note: The front measurement must be 6 mm (1/4 inch) less than the rear measurement.
2. To adjust, loosen the clamps at both ends of the tie rods.
3. Rotate the tie-rod end to move the front of the tire inward or outward.
4. Tighten the tie-rod clamps when the adjustment is correct.

Changing the Front Tires

1. Lower the wing cutting units to the ground.
2. Raise the front of the machine several inches off the ground and support it with jackstands.
3. Refer to Pivoting (Tilting) the Center Cutting Unit to the Upright Position (page 76).
4. Pivot the mower deck forward so you can remove the tire.

Cooling System Maintenance

Cooling System Safety

- Swallowing engine coolant can cause poisoning; keep out of reach from children and pets.
- Discharge of hot, pressurized coolant or touching a hot radiator and surrounding parts can cause severe burns.
  - Always allow the engine to cool at least 15 minutes before removing the radiator cap.
  - Use a rag when opening the radiator cap, and open the cap slowly to allow steam to escape.
- Do not operate the machine without the covers in place.
- Keep your fingers, hands and clothing clear of rotating fan and drive belt.

Coolant Specification

The coolant reservoir is filled at the factory with a 50/50 solution of water and ethylene glycol base extended-life coolant.

Important: **Use only commercially available coolants that meet the specifications listed in the Extended Life Coolant Standards Table.**

Do not use conventional (green) inorganic-acid technology (IAT) coolant in your machine. Do not mix conventional coolant with extended-life coolant.

Coolant Type Table

Ethylene-Glycol Coolant Type	Corrosion Inhibitor Type
Extended-life antifreeze	Organic-acid technology (OAT)
Important: **Do not rely on the color of the coolant to identify the difference between conventional (green) inorganic-acid technology (IAT) coolant and extended-life coolant.** **Coolant manufacturers may dye extended-life coolant in one of the following colors: red, pink, orange, yellow, blue, teal, violet, and green. Use coolant that meets the specifications in the Extended Life Coolant Standards Table.**	

Extended Life Coolant Standards

ATSM International	SAE International
D3306 and D4985	J1034, J814, and 1941

Important: **Coolant concentration should be a 50/50 mixture of coolant to water.**

- **Preferred:** When mixing coolant from a concentrate, mix it with distilled water.
- **Preferred option:** If distilled water is not available, use a pre-mix coolant instead of a concentrate.
- **Minimum requirement:** If distilled water and pre-mix coolant are not available, mix concentrated coolant with clean drinkable water.

Checking the Cooling System

Service Interval: Before each use or daily

Check the coolant level at the beginning of each day. The capacity of the system is 8.5 L (9 US qt).

⚠ DANGER

The rotating fans and drive belts can cause personal injury.

- **Do not operate the machine without the guards in place.**
- **Keep your fingers, hands, and clothing clear of the rotating fan and drive belt.**
- **Shut off the engine and remove the key before performing maintenance.**

1. Carefully remove the radiator cap and expansion-tank cap (Figure 79).
2. Check the coolant level in the radiator.

   Note: The radiator should be filled to the top of the filler neck and the expansion tank filled to the Full mark.

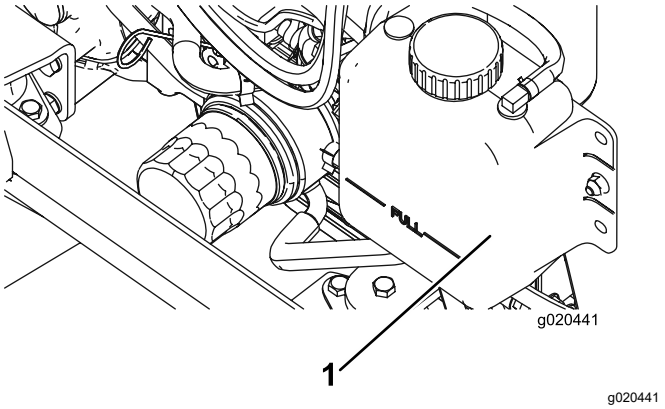

Figure 79

1. Expansion tank

3. If the coolant is low, add a 50/50 mixture of water and ethylene glycol anti-freeze.

   Important: **Do not use water only or alcohol/methanol based coolants, as this may cause damage.**
4. Install the radiator cap and expansion-tank cap.

Servicing the Engine-Cooling System

Service Interval: Every 100 hours
Every 2 years

Remove debris from the oil radiator/oil cooler daily. Clean them more frequently in dirty conditions.

This machine is equipped with a hydraulically-driven fan drive system that automatically (or manually) reverses to reduce the radiator/oil cooler and screen debris buildup. While this feature can help reduce the time required to clean radiator/oil cooler, it does not eliminate the need for routine cleaning. Periodic

cleaning and inspection of the radiator/oil cooler is still required.

1. Shut off the engine, remove the key, and raise the hood.
2. Clean the engine area thoroughly of all debris.
3. Clean both sides of the radiator/oil cooler area thoroughly with compressed air (Figure 80).

   Note: Start from the fan side and blow the debris out toward the back. Then, clean from the back side and blow toward the front. Repeat this procedure several times until all chaff and debris is removed.

   Important: **Cleaning the radiator/oil cooler with water can promote premature corrosion and damage to components.**

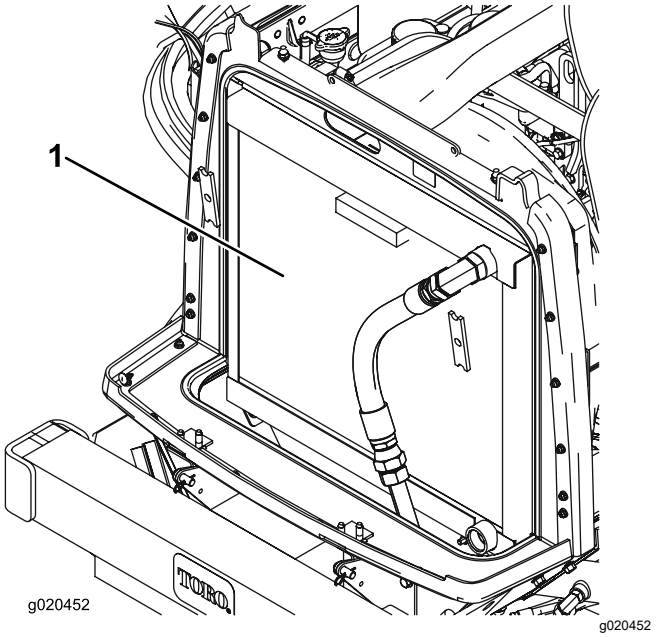

Figure 80

1. Radiator/oil cooler

4. Close the hood.

Brake Maintenance

Adjusting the Service Brakes

Adjust the service brakes when there is more than 25 mm (1 inch) of free travel of the brake pedal, or when the brakes do not work effectively. Free travel is the distance the brake pedal moves before you feel braking resistance.

1. Release the locking latch from the brake pedals so that both pedals work independently of each other.
2. To reduce free travel of the brake pedals, tighten the brakes as follows:

   A. Loosen the front nut on the threaded end of the brake cable (Figure 81).

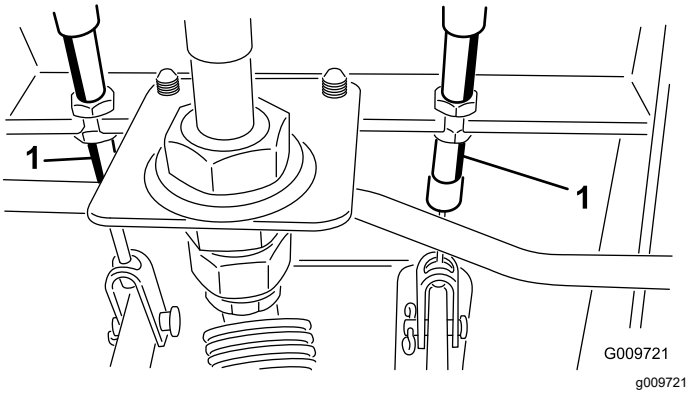

Figure 81

1. Brake cable

   B. Tighten the rear nut to move the cable rearward until the brake pedals have 13 to 25 mm (1/2 to 1 inch) of free travel.

   C. Tighten the front nuts after the brakes are adjusted correctly.

Belt Maintenance

Servicing the Alternator Belt

Service Interval: After the first 10 hours

Every 100 hours

Proper tension of the belt allows 10 mm (3/8 inch) of deflection when a force of 44 N·m (10 ft-lb) is applied on the belt midway between the pulleys.

If the deflection is not 10 mm (3/8 inch), loosen the alternator-mounting bolts (Figure 82).

Note: Increase or decrease the alternator-belt tension and tighten the bolts. Check the deflection of the belt again to ensure that the tension is correct.

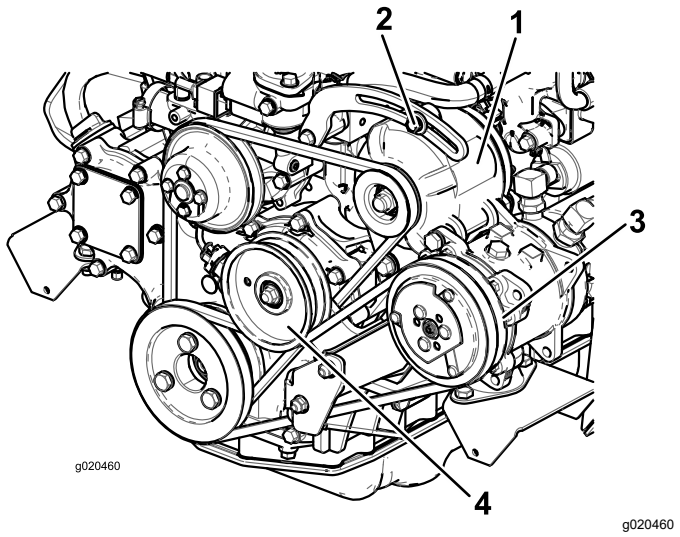

Figure 82

1. Alternator
2. Mounting bolt
3. Compressor
4. Idler pulley

Servicing the Air Conditioner Compressor Belt

Service Interval: After the first 10 hours

Every 100 hours

Cab model only

Check the condition and tension of the belt (Figure 82) after every 100 operating hours.

1. Proper tension allows 10 mm (3/8 inch) deflection when a force of 44 N (10 lb) is applied on the belt midway between the pulleys.
2. If the deflection is not 10 mm (3/8 inch), loosen the idler pulley mounting bolt (Figure 82). Increase or decrease the compressor belt tension and tighten the bolt. Check the deflection of the belt again to ensure that the tension is correct.

Tensioning the Blade-Drive Belts

Service Interval: After the first 10 hours

Every 50 hours

When properly tensioned, the inside measurement of the extension spring (hook to hook) should be approximately 8.3 to 9.5 cm (3-1/4 to 3-3/4 inches). Once the correct spring tension is attained, adjust the stop bolt (carriage bolt) until there is approximately 2 to 5 mm (0.065 to 0.185 inch) clearance between the head of the bolt and the idler arm (Figure 83).

Note: Ensure that the belt is positioned on the spring side of the belt guide (Figure 83).

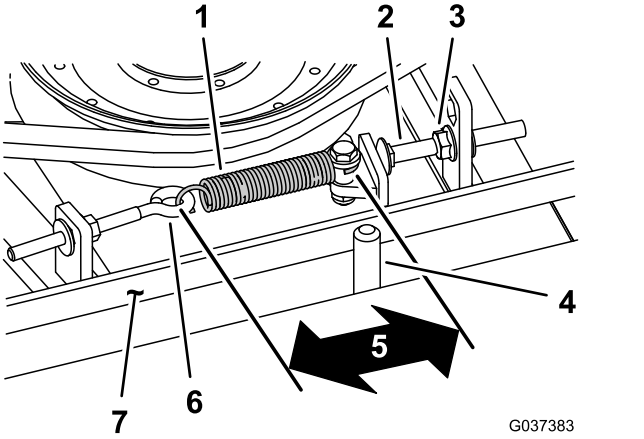

Figure 83

1. Extension spring
2. Stop bolt
3. Flange nut
4. Belt guide
5. Measurement (hook to hook)—approximately 8.3 to 9.5 cm (3-1/4 to 3-3/4 inches)
6. Eye bolt
7. Belt

Replacing the Blade-Drive Belt

Service Interval: Every 800 hours

The blade-drive belt, tensioned by the spring-loaded idler pulley, is very durable. However, after many hours of use, the belt will show signs of wear. Signs of a worn belt include squealing when the belt is rotating, blades slipping when cutting grass, frayed edges, burn marks, and cracks. Replace the belt if any of these conditions are evident.

1. Lower the mower deck to the shop floor, remove the belt covers from the top of the mower deck, and set the covers aside.
2. Loosen the eye bolt (Figure 83).
3. Loosen the flange nut securing the stop bolt to the mounting tab and move the idler pulley away from the belt (Figure 83).

   Note: Loosen the nut enough to allow the idler arm to pass the stop bolt.

   Note: If you must remove the stop bolt from the mounting tab, install it in the hole that aligns the stop-bolt head with the idler arm.
4. Remove the bolts securing the hydraulic motor to the mower deck (Figure 84).

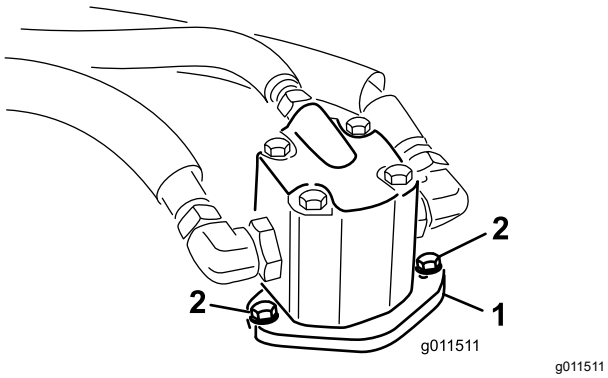

g011511

Figure 84

1. Hydraulic motor
2. Mounting bolts

5. Lift the motor off the mower deck and lay it on top of the mower deck.
6. Remove the old belt from around the spindle pulleys and idler pulley.
7. Route the new belt around the spindle pulleys and idler-pulley assembly.
8. Position the hydraulic motor on the mower deck after routing the belt around the pulleys. Mount the motor to the mower deck with the bolts previously removed.

   Note: Ensure that the belt is positioned on the spring side of the belt guide (Figure 83).
9. Connect the extension spring (Figure 83) to the eye bolt and tension the belt as follows:
   - When properly tensioned, the inside measurement of the extension spring (hook to hook) should be approximately 8.3 to 9.5 cm (3-1/4 to 3-3/4 inch).
   - When you attain the correct spring tension, adjust the stop bolt (carriage bolt) until there is approximately 2 to 5 mm (0.065 to 0.185 inches) clearance between the head of the bolt and the idler arm.

Hydraulic System Maintenance

Hydraulic System Safety

- Seek immediate medical attention if fluid is injected into skin. Injected fluid must be surgically removed within a few hours by a doctor.
- Ensure that all hydraulic-fluid hoses and lines are in good condition and all hydraulic connections and fittings are tight before applying pressure to the hydraulic system.
- Keep your body and hands away from pinhole leaks or nozzles that eject high-pressure hydraulic fluid.
- Use cardboard or paper to find hydraulic leaks.
- Safely relieve all pressure in the hydraulic system before performing any work on the hydraulic system.

Servicing the Hydraulic System

Hydraulic Fluid Specifications

The reservoir is filled at the factory with high-quality hydraulic fluid. Check the level of the hydraulic fluid before you first start the engine and daily thereafter; refer to Changing the Hydraulic Fluid (page 74).

Recommended hydraulic fluid: Toro PX Extended Life Hydraulic Fluid; available in 19 L (5 US gallon) pails or 208 L (55 US gallon) drums.

Note: A machine using the recommended replacement fluid requires less frequent fluid and filter changes.

Alternative hydraulic fluids: If Toro PX Extended Life Hydraulic Fluid is not available, you may use another conventional, petroleum-based hydraulic fluid having specifications that fall within the listed range for all the following material properties and that it meets industry standards. Do not use synthetic fluid. Consult with your lubricant distributor to identify a satisfactory product.

Note: Toro does not assume responsibility for damage caused by improper substitutions, so use products only from reputable manufacturers who will stand behind their recommendation.

High Viscosity Index/Low Pour Point Anti-wear Hydraulic Fluid, ISO VG 46

High Viscosity Index/Low Pour Point Anti-wear Hydraulic Fluid, ISO VG 46 (cont'd.)

Material Properties:	
Viscosity, ASTM D445	cSt @ 40°C (104°F) 44 to 48
Viscosity Index ASTM D2270	140 or higher
Pour Point, ASTM D97	-37°C to -45°C (-34°F to -49°F)
Industry Specifications:	Eaton Vickers 694 (I-286-S, M-2950-S/35VQ25 or M-2952-S)

Note: Many hydraulic fluids are almost colorless, making it difficult to spot leaks. A red dye additive for the hydraulic fluid is available in 20 ml (0.67 fl oz) bottles. A bottle is sufficient for 15 to 22 L (4 to 6 US gallons) of hydraulic fluid. Order Part No. 44-2500 from your authorized Toro distributor.

Important: **Toro Premium Synthetic Biodegradable Hydraulic Fluid is the only synthetic biodegradable fluid approved by Toro. This fluid is compatible with the elastomers used in Toro hydraulic systems and is suitable for a wide-range of temperature conditions. This fluid is compatible with conventional mineral oils, but for maximum biodegradability and performance, the hydraulic system should be thoroughly flushed of conventional fluid. The oil is available in 19 L (5 US gallon) pails or 208 L (55 US gallon) drums from your authorized Toro distributor.**

Checking the Hydraulic Fluid

Service Interval: Before each use or daily

1. Position the machine on a level surface, lower the cutting units, shut off the engine, and remove the key from the ignition.
2. Check the hydraulic-fluid level (Figure 85).

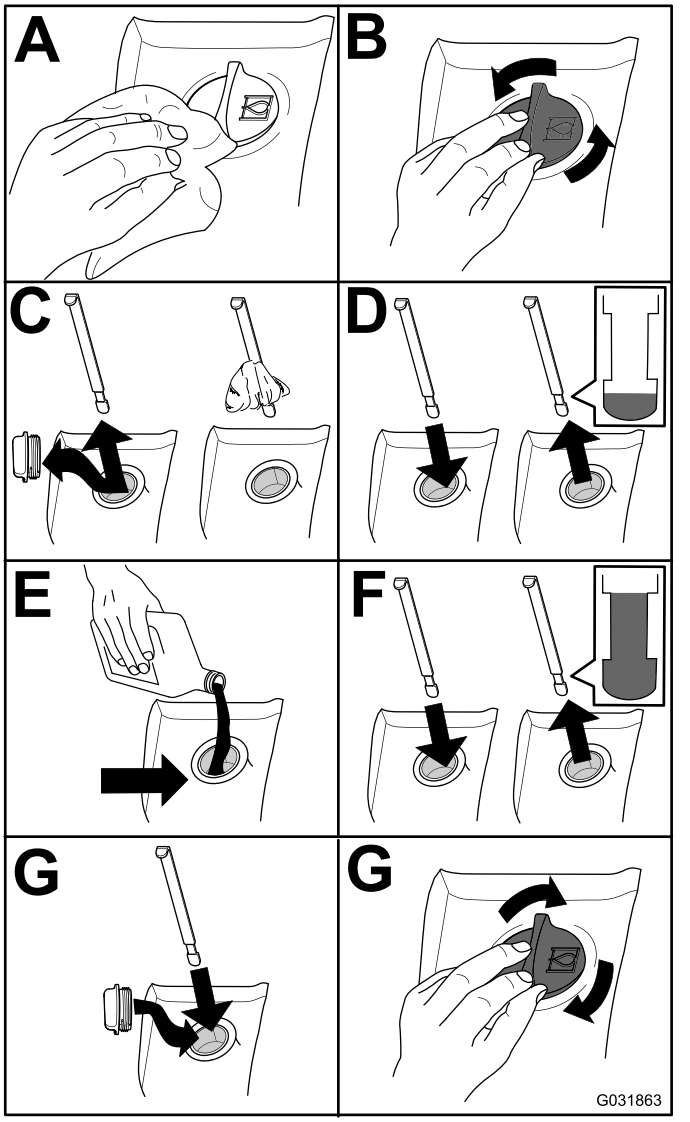

Figure 85

Changing the Hydraulic Fluid

Service Interval: Every 2,000 hours—**If you are using the recommended hydraulic fluid,** change the hydraulic fluid.

Every 800 hours—**If you are not using the recommended hydraulic fluid or have ever filled the reservoir with an alternative fluid,** change the hydraulic fluid.

If the hydraulic fluid becomes contaminated, the hydraulic system must be flushed. Contaminated fluid looks milky or black when compared to clean oil. Contact your authorized Toro distributor for assistance.

1. Park the machine on a level surface, lower the cutting units, shut off the engine, and remove the key.
2. Remove the drain plug from the bottom, front of the reservoir and let the hydraulic fluid flow into a large drain pan.
3. Install and tighten the plug when the hydraulic fluid stops draining.
4. Fill the reservoir (Figure 86) with hydraulic fluid; refer to Checking the Hydraulic Fluid (page 73).

   Important: **Use only the hydraulic fluids specified. Other fluids damage the system.**

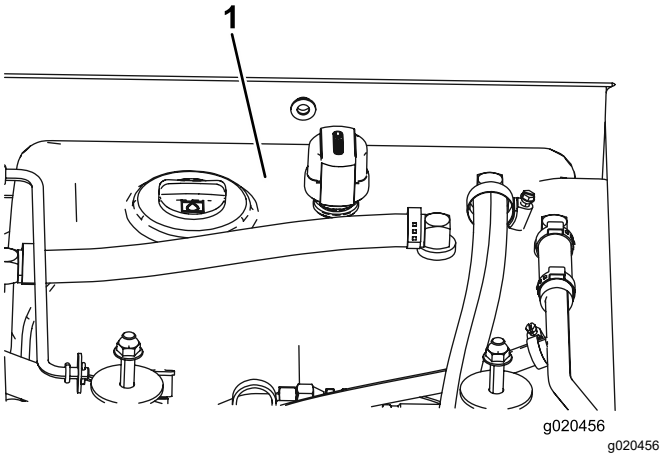

Figure 86

1. Hydraulic reservoir

5. Install the reservoir cap, start the engine, and use all the hydraulic controls to distribute hydraulic fluid throughout the system.

   Note: Also check for leaks; then shut off the engine.
6. Check the fluid level and add enough to raise level the level to the Full mark on the dipstick.

   Note: Do not overfill.

Replacing the Hydraulic Filters

Service Interval: Every 1,000 hours—**If you are using the recommended hydraulic fluid,** replace the hydraulic filter (sooner if the service interval indicator is in the red zone).

Every 800 hours—**If you are not using the recommended hydraulic fluid or have ever filled the reservoir with an alternative fluid,** replace the hydraulic filter (sooner if the service interval indicator is in the red zone).

Use the following Toro replacement filters:

- Part No. 94-2621 for the rear (cutting unit) of the machine
- Part No. 75-1310 for the front (charge) of the machine

Important: **Use of any other filter may void the warranty on some components.**

1. Position the machine on a level surface, lower the cutting units, engage the parking brakes, shut off the engine, and remove the key from the ignition.
2. Replace the hydraulic filters (Figure 87).

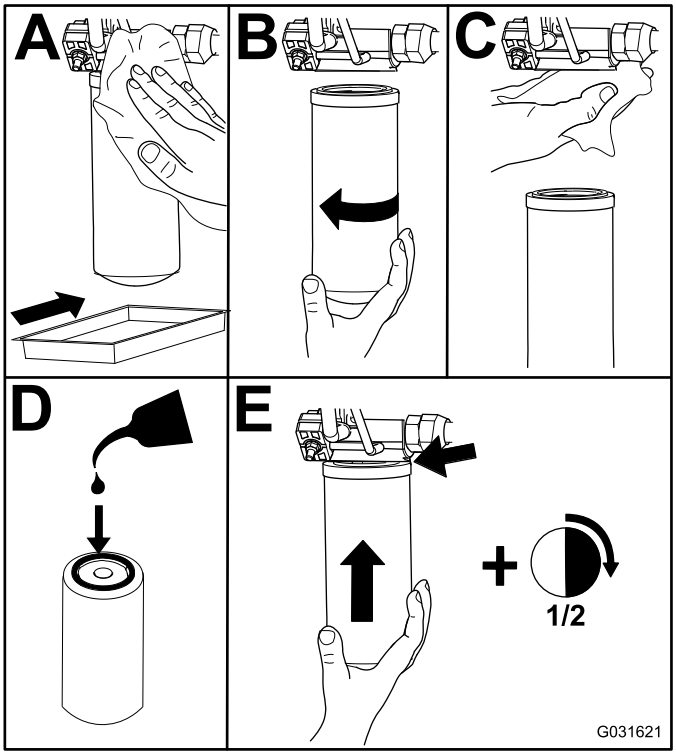

Figure 87

3. Start the engine and let it run for about 2 minutes to purge air from the system and shut off the engine and check for leaks.

Checking the Hydraulic Lines and Hoses

Service Interval: Every 2 years

⚠ WARNING

Hydraulic fluid escaping under pressure can penetrate skin and cause injury.

- **Seek immediate medical help if fluid is injected into skin.**
- **Make sure that all hydraulic-fluid hoses and lines are in good condition and all hydraulic connections and fittings are tight before applying pressure to the hydraulic system.**
- **Keep your body and hands away from pinhole leaks or nozzles that eject high-pressure hydraulic fluid.**
- **Use cardboard or paper to find hydraulic leaks.**
- **Safely relieve all pressure in the hydraulic system before performing any work on the hydraulic system.**

Inspect the hydraulic lines and hoses daily for leaks, kinked lines, loose mounting supports, wear, loose fittings, weather deterioration, and chemical deterioration. Make all necessary repairs before operating the machine.

Adjusting the Counterbalance Pressure

The counterbalance test port is used to test the pressure in the counterbalance circuit (Figure 88). The recommended counterbalance pressure is 2241 kPa (325 psi). To adjust the counterbalance pressure, loosen the locknut, rotate the adjusting screw (Figure 88) clockwise to increase the pressure or counterclockwise to decrease the pressure, and tighten the locknut. The engine must be running and the deck lowered and in the float position to check the pressure.

Note: The caster wheels of all 3 cutting units should remain on the ground when adjusting the counterbalance and with counterbalance applied.

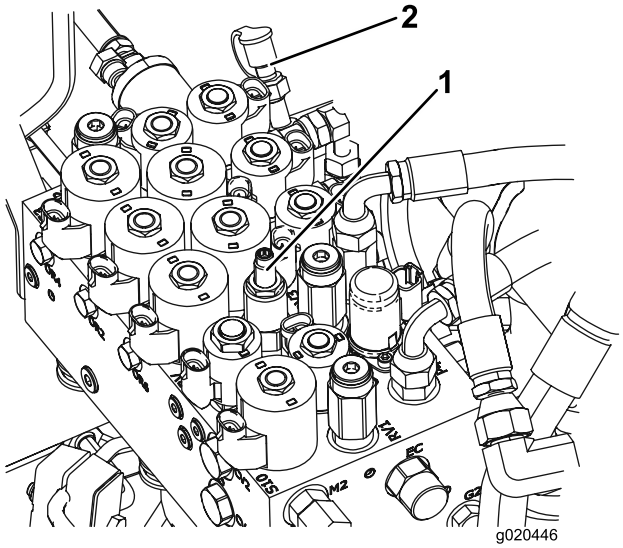

Figure 88

1. Counterbalance-adjusting screw
2. Counterbalance-test port

Cutting Unit Maintenance

Pivoting (Tilting) the Center Cutting Unit to the Upright Position

Note: Although not needed, you can pivot (tilt) the center cutting unit.

1. Raise the center cutting unit slightly off the floor, set the parking brake, and shut off the engine, and remove the key.
2. Remove the hairpin cotter securing the dampers to lift arms (Figure 89).

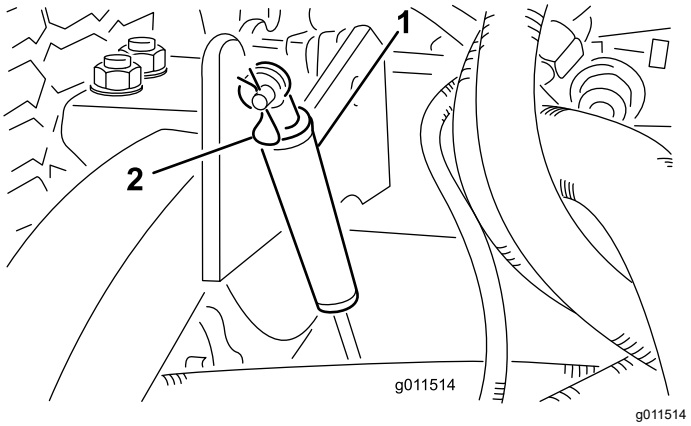

Figure 89

1. Damper
2. Hairpin cotter

3. Pivot the damper toward the deck housing.
4. Remove the hairpin cotter and clevis pin securing the height-of-cut chains to the rear of the cutting unit (Figure 90).

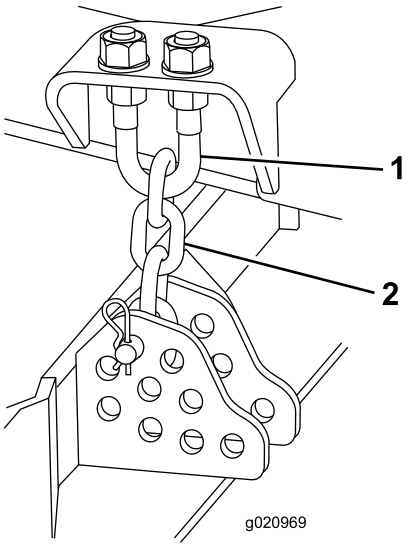

g020969

Figure 90

1. U-bolt
2. Height-of-cut chain

5. Start the engine and slowly raise the center cutting unit.
6. Slowly raise each side cutting until the center of gravity shifts and the deck starts to rotate into the upright position.
7. Shut off the engine and remove the ignition key.

Pivoting the Center Cutting Unit Down

1. Slowly lower the wing cutting units until the center of gravity shifts and the center cutting unit rotates downward.
2. Sit on the seat, start the engine, and lower the center cutting unit until it is slightly off the floor.
3. Shut off the engine, wait for all parts to stop moving, and remove the key.
4. Secure the height-of-cut chains to the rear of the cutting unit.
5. Pivot the dampers upward into position and secure with a clevis pin and cotter pin.

Adjusting the Cutting-Unit Pitch

Measuring the Cutting-Unit Pitch

Mower-deck pitch is the difference in height-of-cut from the front of the blade plane to the back of the blade plane. Use a blade pitch of 8 to 11 mm (5/16 to 7/16 inch). That is the back of the blade plane is 8 to 11 mm (5/16 to 7/16 inch) higher than the front.

1. Position the machine on a level surface on the shop floor.
2. Set the cutting unit to the desired height of cut.
3. Rotate a blade to point straight forward.
4. Using a short ruler, measure from the floor to the front tip of the blade.
5. Rotate the blade tip to the rear and measure from the floor to the tip of the blade.
6. Subtract the front dimension from the rear dimension to calculate the blade pitch.

Adjusting the Center Cutting-Unit Pitch

1. Loosen the jam nuts on the top or bottom of the height-of-cut-chain U-bolt (Figure 91).
2. Adjust the other set of nuts to raise or lower the rear of the mower deck and attain the correct mower-deck pitch.
3. Tighten the jam nuts.

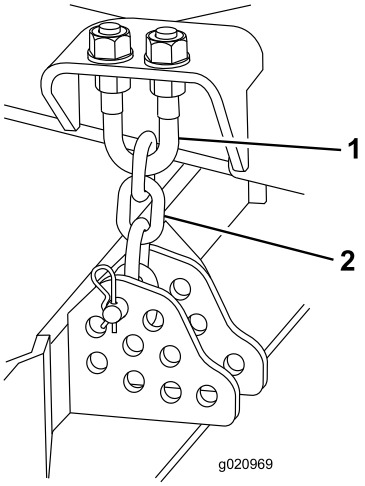

g020969

Figure 91

1. U-bolt
2. Height-of-cut chain

Adjusting the Wing Cutting Units

1. Remove the cap screws and nuts securing the caster arm to the caster fork (Figure 92).
2. Position the shims, as required, to raise or lower the caster wheel until the cutting unit has the correct pitch.
3. Install the cap screws and nuts.

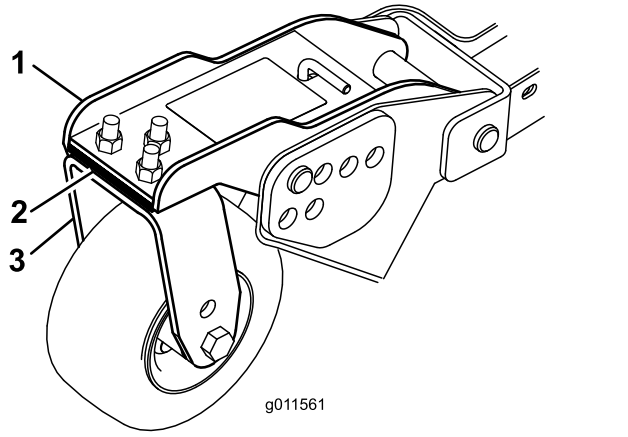

g011561

Figure 92

1. caster arm
2. Shims
3. caster fork

Servicing the Caster-Arm Bushings

Removing the Bushings

The caster arms have bushings pressed into the top and bottom of the tube and after many hours of operation, the bushings develop wear. To check the bushings, move the caster fork back and forth and from side to side. If the caster spindle is loose inside the bushings, replace the bushings.

1. Raise the cutting unit so that the wheels are off the floor and block the cutting unit so it cannot fall.
2. Remove the tensioning cap, spacer(s), and thrust washer from the top of the caster spindle.
3. Pull the caster spindle out of the mounting tube.

   Note: Keep the thrust washer and spacer(s) on the bottom of the spindle.
4. Insert a pin punch into the top or bottom of the mounting tube and drive the bushing out of the tube (Figure 93).

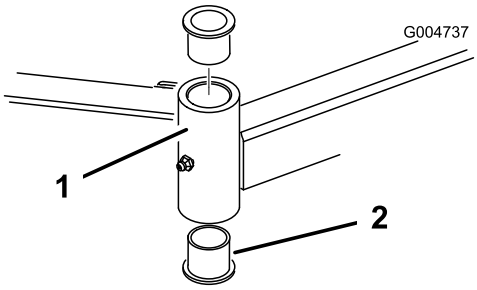

g004737

Figure 93

1. Caster-arm tube
2. Bushings

5. Drive the other bushing out of the tube.
6. Clean the inside of the tubes to remove dirt.

Installing the Bushings

1. Apply grease to the inside and outside of the new bushings.
2. Using a hammer and flat plate, drive the bushings into the mounting tube.
3. Inspect the caster spindle for wear and replace it if it is damaged.
4. Push the caster spindle through the bushings and mounting tube.
5. Slide the thrust washer and spacer(s) onto the spindle and install the tensioning cap on the caster spindle to retain all parts in place.

Servicing the Caster Wheels and Bearings

Service Interval: Every 800 hours

1. Remove the locknut from the bolt holding the caster-wheel assembly between the caster fork (Figure 94) or the caster-pivot arm (Figure 95).

   Note: Grasp the caster wheel and slide the bolt out of the fork or pivot arm.

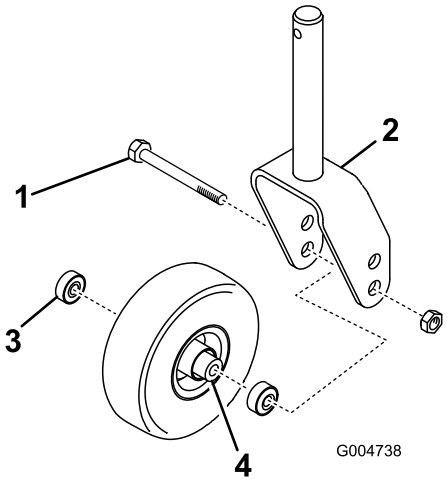

g004738

Figure 94

1. Caster bolt
2. Caster fork
3. Bearing
4. Bearing spacer

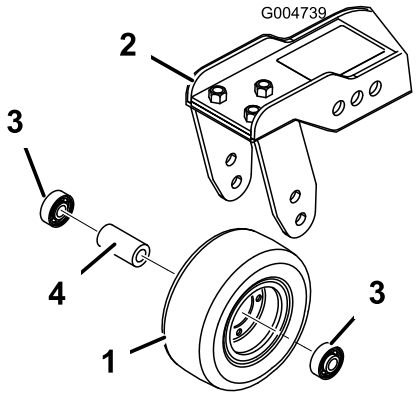

g004739

Figure 95

1. Caster wheel
2. Caster-pivot arm
3. Bearing
4. Bearing spacer

2. Remove the bearing from the wheel hub and allow the bearing spacer to fall out (Figure 94 and Figure 95).
3. Remove the bearing from the opposite side of the wheel hub.
4. Check the bearings, spacer, and inside of the wheel hub for wear and replace any damaged parts.
5. To assemble the caster wheel, push the bearing into the wheel hub.

   Note: When installing the bearings, press on the outer face of the bearing.
6. Slide the bearing spacer into the wheel hub and push the other bearing into the open end of the wheel hub to captivate the bearing spacer inside the wheel hub.
7. Install the caster-wheel assembly between the caster fork and secure it in place with the bolt and locknut.

Replacing the Cutting Unit Hinge Covers

The hinge cover prevents debris from escaping at hinge points between cutting units. If the cover(s) become damaged or worn, replace them.

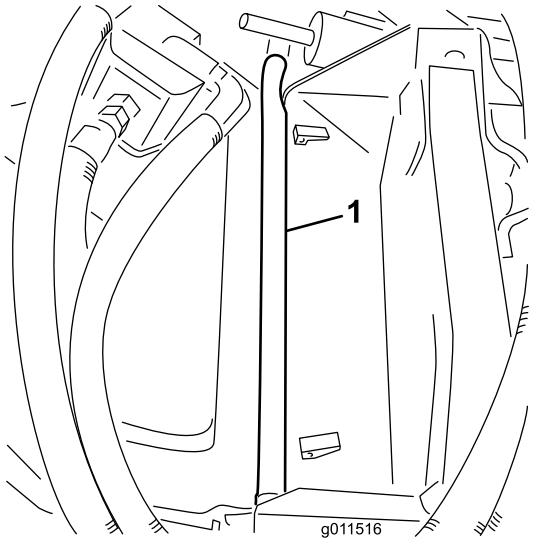

g011516

Figure 96

1. Hinge point

Blade Maintenance

Blade Safety

- Inspect the blade periodically for wear or damage.
- Use care when checking the blades. Wrap the blades or wear gloves, and use caution when servicing the blades. Only replace or sharpen the blades; never straighten or weld them.
- On multi-bladed machines, take care as rotating one blade can cause other blades to rotate.

Checking for a Bent Blade

After striking a foreign object, inspect the machine for damage and make repairs before starting and operating the equipment. Torque all of the spindle-pulley nuts to 176 to 203 N·m (130 to 150 ft-lb).

1. Position the machine on a level surface, raise the cutting unit, engage the parking brake, put the traction pedal in NEUTRAL, put the PTO lever in the OFF position, shut off the engine, and remove the ignition key.

   Note: Block the cutting unit to prevent it from accidentally falling.

2. Rotate the blade until the ends face forward and backward and measure from the inside of the cutting unit to the cutting edge at the front of the blade (Figure 97).

   Note: Remember this dimension.

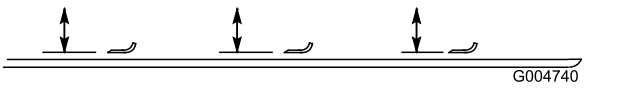

Figure 97

3. Rotate the opposite end of the blade forward and measure between the cutting unit and cutting edge of the blade at the same position as in step 2.

   Note: The difference between the dimensions obtained in steps 2 and 3 must not exceed 3 mm (1/8 inch). If the dimension exceeds 3 mm (1/8 inch), the blade is bent and must be replaced; refer to Removing and Installing the Cutting-Unit Blade(s) (page 80).

Removing and Installing the Cutting-Unit Blade(s)

Replace the blade if it hits a solid object, is out of balance, or is bent. Always use genuine Toro replacement blades to ensure safety and optimum performance.

1. Park the machine on a level surface, raise the cutting unit to the transport position, engage the parking brake, shut off the engine, and remove the key.

   Note: Block or lock the cutting unit to prevent it from accidentally falling.

2. Grasp the end of the blade using a rag or thickly-padded glove.
3. Remove the blade bolt, anti-scalp cup, and blade from the spindle shaft (Figure 98).

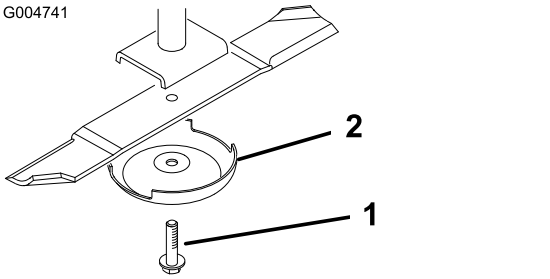

Figure 98

1. Blade bolt
2. Anti-scalp cup

4. Install the blade, anti-scalp cup, and blade bolt and tighten the blade bolt to 115 to 149 N·m (85 to 110 ft-lb).

   Important: **The curved part of the blade must be pointing toward the inside of the cutting unit to ensure proper cutting.**

   Note: After striking a foreign object, torque all spindle-pulley nuts to 115 to 149 N·m (85 to 110 ft-lb).

Inspecting and Sharpening the Cutting Unit Blade(s)

Both cutting edges and the sail, which is the turned-up portion opposite of the cutting edge, contribute to a good quality of cut.

Maintain sharp blades throughout the cutting season. Sharp blades create a clean cut without tearing or shredding the grass blades.

Check the blades for any wear or damage. The sail lifts the grass up straight, thereby producing an even cut and gradually wears down during operation.

1. Park the machine on a level surface, raise the cutting unit, engage the parking brake, put the traction pedal in NEUTRAL, put the PTO lever in the OFF position, shut off the engine, and remove the key from the ignition.
2. Examine the cutting ends of the blade carefully, especially where the flat and curved parts of the blade meet (Figure 99).

   Note: Because sand and abrasive material can wear away the metal that connects the flat and curved parts of the blade, check the blade before using the mower. If you notice wear (Figure 99), replace the blade.

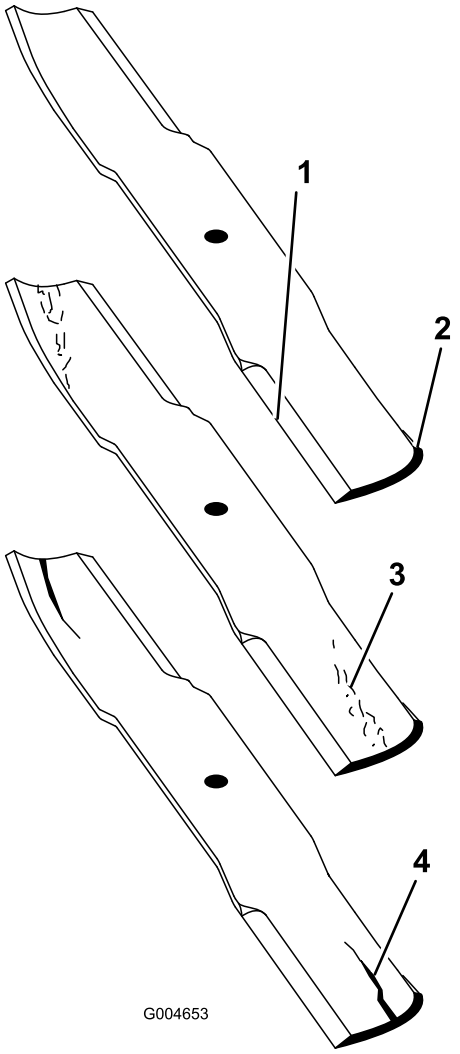

g004653

Figure 99

1. Cutting edge
2. Curved area
3. Wear/slot forming
4. Crack

3. Examine the cutting edges of all of the blades and sharpen the cutting edges if they are dull or nicked (Figure 100).

   Note: Sharpen only the top of the cutting edge and maintain the original cutting angle to ensure sharpness (Figure 100). The blade remains balanced if the same amount of metal is removed from both cutting edges.

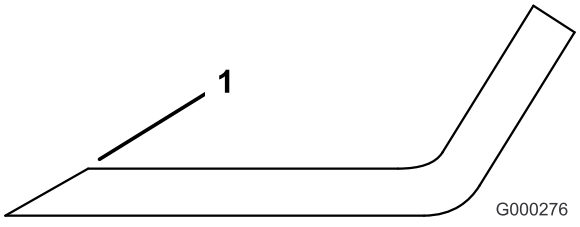

g000276

Figure 100

1. Sharpen at the original angle.

Note: Remove the blades and sharpen them on a grinder. After sharpening the cutting edges, install the blade with the anti-scalp cup and blade bolt; refer to Removing and Installing the Cutting-Unit Blade(s) (page 80).

Correcting a Cutting Unit Mismatch

When there is mismatch between the blades on a single cutting unit, the grass appears streaked when it is cut. You can correct this problem by ensuring that the blades are straight.

1. Park the machine on a level surface.
2. Raise the height of cut to the highest position; refer to Adjusting the Height of Cut (page 29).
3. Lower the cutting unit onto the flat surface and remove the covers from the top of the cutting unit.
4. Loosen the flange nut that secures the idler pulley to release the belt tension.
5. Rotate the blades until the ends face forward and rearward and measure from the floor to the front tip of the cutting edge. Remember this dimension.
6. Rotate the same blade so that the opposite end is forward, and measure again. The difference between the dimensions must not exceed 3 mm (1/8 inch). If the dimension exceeds 3 mm (1/8 inch), replace the blade, as it is bent. Measure all the blades.
7. Compare the measurements of the outer blades with the center blade.

   Note: The center blade must not be more than 10 mm (3/8 inch) lower than the outer blades. If the center blade is more than 10 mm (3/8 inch) lower than the outer blades, proceed to step 8 and add shims between the spindle housing and the bottom of the cutting unit.
8. Remove the bolts, flat washers, lock washers, and nuts from the outer spindle in the area where you must add the shims.

   Note: To raise or lower the blade, add a shim (Part No. 3256-24) between the spindle housing and the bottom of the cutting unit. Continue to check the alignment of the blades and add shims until the tips of the blades are within the required dimension.

   Important: **Do not use more than 3 shims at any 1 hole location. Use decreasing numbers of shims in adjacent holes if more than 1 shim is added to any 1 hole location.**
9. Adjust the idler pulley and install the belt covers.

Cab Maintenance

Cleaning the Cab

Important: **Use care around the cab seals and lights (Figure 101). If you are using a pressure washer, keep the washer wand at least 0.6 m (2 ft) away from the machine. Do not use the pressure washer directly on the cab seals and lights or under the rear overhang.**

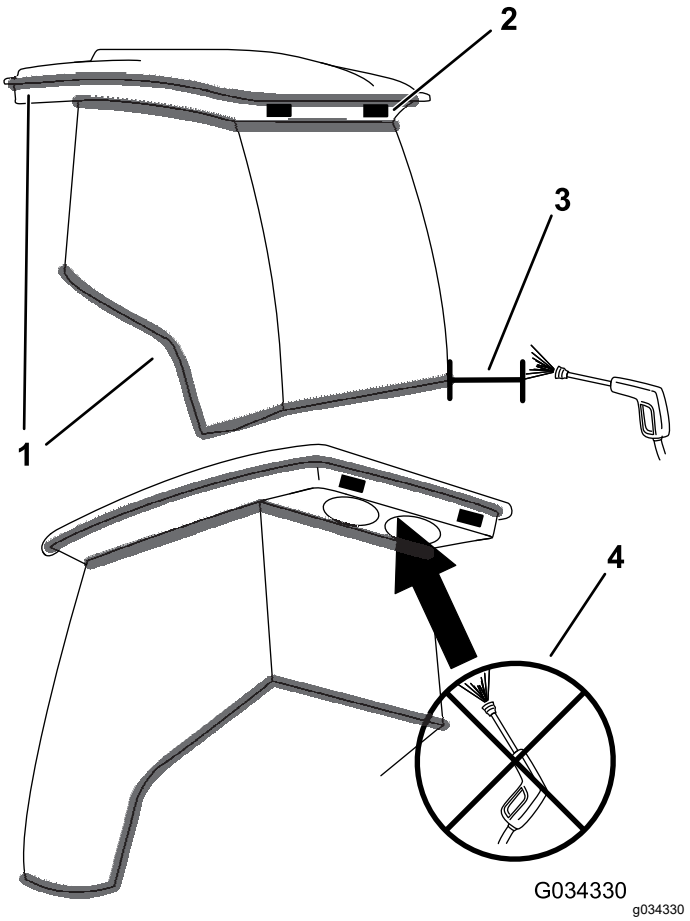

Figure 101

1. Seal
2. Light
3. Keep wand 0.6 m (2 ft) away.
4. Do not pressure-wash under the rear overhang.

Cleaning the Cab Air Filters

Service Interval: Every 250 hours

1. Remove the screws and grates from both the in-cab and rear cab air filters (Figure 102 and Figure 103).

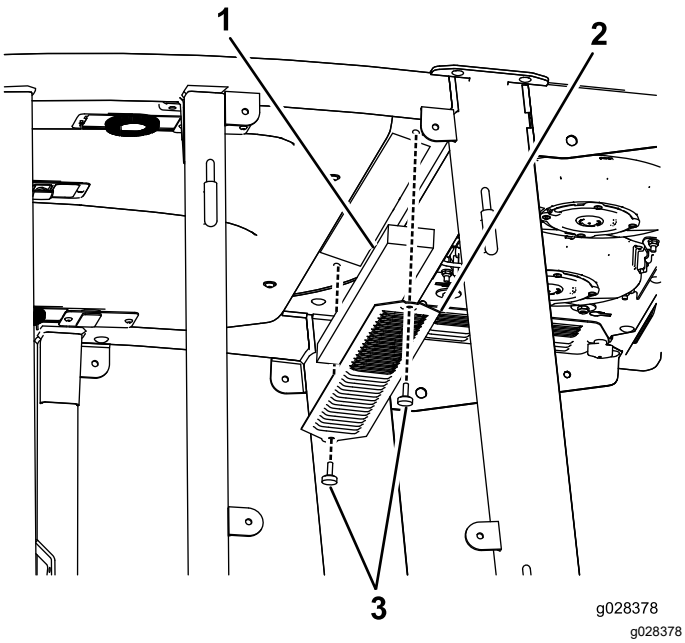

Figure 102
In-Cab Air Filter

1. Filter
2. Grade
3. Screw

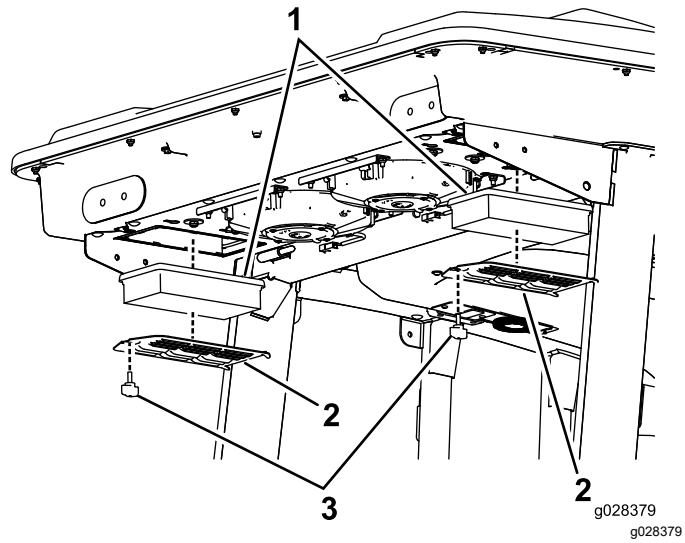

Figure 103
Rear Cab Air Filter

1. Filter
2. Grade
3. Screw

2. Clean the filters by blowing clean, oil-free, compressed air through them.

   Important: **If either filter has a hole, tear, or other damage, replace the filter.**

3. Install the filters and the grate with the thumbscrews.

Cleaning the Cab Pre-Filter

The purpose of the cab pre-filter is to prevent large debris, such as grass and leaves, from entering the cab filters.

1. Rotate the screen cover down.
2. Clean the filter with water.

   Note: Do not use a pressure washer.

   Important: **If the filter has a hole, tear, or other damage, replace the filter.**

3. Allow the pre-filter to dry before installing it into the machine.
4. Rotate the filter screen around the tabs until the latch locks into the latch-mount assembly (Figure 104).

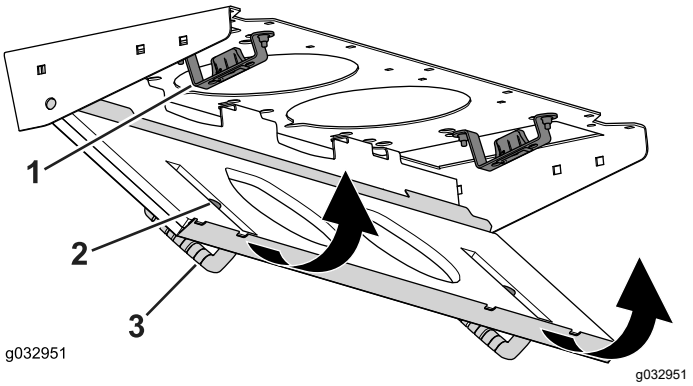

Figure 104

1. Latch-mount assembly
2. Latch
3. Screen cover

Cleaning the Air-Conditioning Coil

Service Interval: Every 250 hours (Clean more frequently in extremely dusty or dirty conditions)

1. Shut off the engine and remove the key.
2. Remove the 6 nuts and washers from the bottom of the rear of the cab (Figure 105).

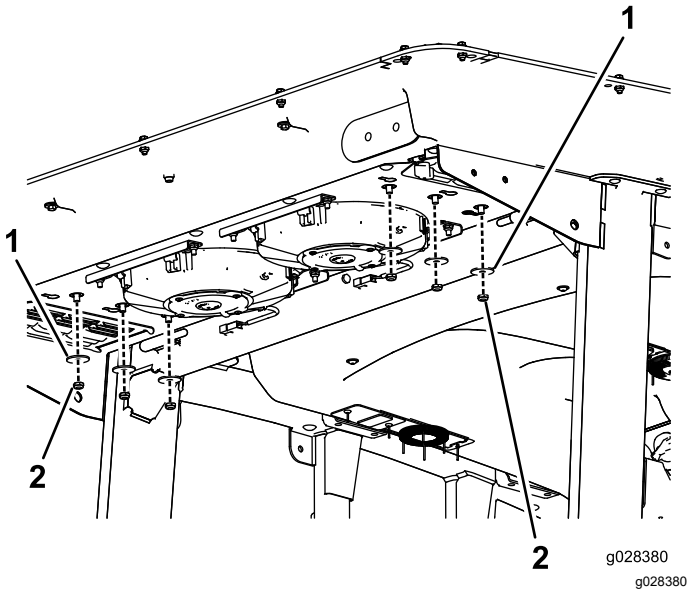

Figure 105

1. Washer
2. Nut

3. Remove the cabin roof of the cab by removing the 22 bolts that secure the roof (Figure 106).

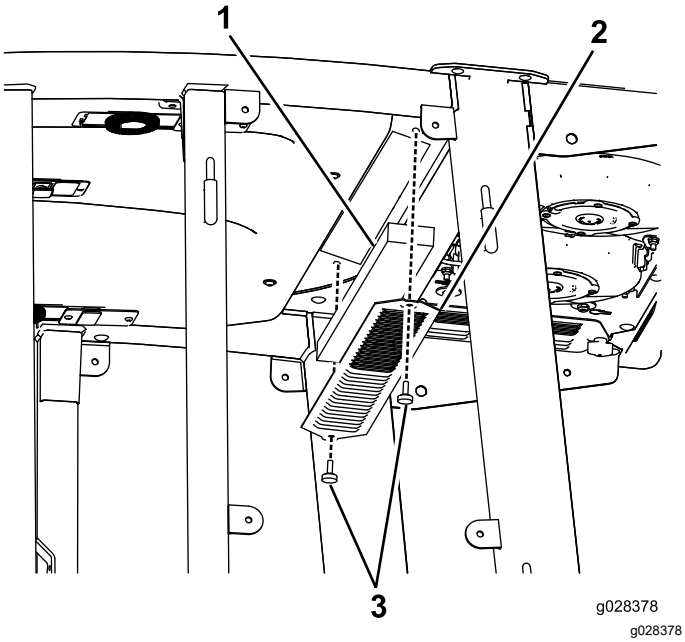

Figure 106

1. Cabin roof
2. Air filters
3. Air-conditioning coils

4. Remove the air filters (Figure 106).
5. Remove and clean the air-conditioning coils (Figure 106).
6. Replace the air-conditioning coils, air filters and cabin roof.

Storage

Storage Safety

- Shut off the engine, remove the key, and wait for all movement to stop before you leave the operator's position. Allow the machine to cool before adjusting, servicing, cleaning, or storing it.
- Do not store the machine or fuel container where there is an open flame, spark, or pilot light, such as on a water heater or other appliance.

Preparing the Machine for Storage

Important: **Do not use brackish or reclaimed water to clean the machine.**

Preparing the Traction Unit

1. Thoroughly clean the traction unit, cutting units, and engine.
2. Check the tire pressure. Inflate all traction unit tires to 83 to 103 kPa (12 to 15 psi).
3. Check all fasteners for looseness and tighten them as necessary.
4. Grease all grease fittings and pivot points. Wipe up any excess lubricant.
5. Lightly sand and use touch-up paint on painted areas that are scratched, chipped, or rusted. Repair any dents in the metal body.
6. Service the battery and cables as follows:
   A. Remove the battery terminals from the battery posts.

      Note: Always disconnect the negative terminal first and the positive last. Always connect the positive terminal first and the negative last.

   B. Clean the battery, terminals, and posts with a wire brush and baking soda solution.

   C. Coat the cable terminals and battery posts with Grafo 112X skin-over grease (Part Number 505-47) or petroleum jelly to prevent corrosion.

   D. Slowly recharge the battery every 60 days for 24 hours to prevent lead sulfation of the battery.

Preparing the Engine

1. Drain the engine oil from the oil pan and replace the drain plug.

2. Remove and discard the oil filter. Install a new oil filter.
3. Refill the oil pan with designated quantity of motor oil.
4. Turn the key in the switch to the ON position, start the engine, and run it at idle speed for approximately 2 minutes.
5. Turn the key in the switch to the OFF position.
6. Thoroughly drain all fuel from the fuel tank, lines, and the fuel filter/water separator assembly.
7. Flush the fuel tank with fresh, clean diesel fuel.
8. Secure all fuel-system fittings.
9. Thoroughly clean and service the air-cleaner assembly.
10. Seal the air-cleaner inlet and the exhaust outlet with weatherproof tape.
11. Check the antifreeze protection and add as needed for expected minimum temperature in your area.

Notes:

Notes:

California Proposition 65 Warning Information

What is this warning?

You may see a product for sale that has a warning label like the following:



WARNING: Cancer and Reproductive Harm—www.p65Warnings.ca.gov.

What is Prop 65?

Prop 65 applies to any company operating in California, selling products in California, or manufacturing products that may be sold in or brought into California. It mandates that the Governor of California maintain and publish a list of chemicals known to cause cancer, birth defects, and/or other reproductive harm. The list, which is updated annually, includes hundreds of chemicals found in many everyday items. The purpose of Prop 65 is to inform the public about exposure to these chemicals.

Prop 65 does not ban the sale of products containing these chemicals but instead requires warnings on any product, product packaging, or literature with the product. Moreover, a Prop 65 warning does not mean that a product is in violation of any product safety standards or requirements. In fact, the California government has clarified that a Prop 65 warning "is not the same as a regulatory decision that a product is 'safe' or 'unsafe.'" Many of these chemicals have been used in everyday products for years without documented harm. For more information, go to https://oag.ca.gov/prop65/faqs-view-all.

A Prop 65 warning means that a company has either (1) evaluated the exposure and has concluded that it exceeds the "no significant risk level"; or (2) has chosen to provide a warning based on its understanding about the presence of a listed chemical without attempting to evaluate the exposure.

Does this law apply everywhere?

Prop 65 warnings are required under California law only. These warnings are seen throughout California in a wide range of settings, including but not limited to restaurants, grocery stores, hotels, schools, and hospitals, and on a wide variety of products. Additionally, some online and mail order retailers provide Prop 65 warnings on their websites or in catalogs.

How do the California warnings compare to federal limits?

Prop 65 standards are often more stringent than federal and international standards. There are various substances that require a Prop 65 warning at levels that are far lower than federal action limits. For example, the Prop 65 standard for warnings for lead is 0.5 µg/day, which is well below the federal and international standards.

Why don't all similar products carry the warning?

- Products sold in California require Prop 65 labelling while similar products sold elsewhere do not.
- A company involved in a Prop 65 lawsuit reaching a settlement may be required to use Prop 65 warnings for its products, but other companies making similar products may have no such requirement.
- The enforcement of Prop 65 is inconsistent.
- Companies may elect not to provide warnings because they conclude that they are not required to do so under Prop 65; a lack of warnings for a product does not mean that the product is free of listed chemicals at similar levels.

Why does Toro include this warning?

Toro has chosen to provide consumers with as much information as possible so that they can make informed decisions about the products they buy and use. Toro provides warnings in certain cases based on its knowledge of the presence of one or more listed chemicals without evaluating the level of exposure, as not all the listed chemicals provide exposure limit requirements. While the exposure from Toro products may be negligible or well within the "no significant risk" range, out of an abundance of caution, Toro has elected to provide the Prop 65 warnings. Moreover, if Toro does not provide these warnings, it could be sued by the State of California or by private parties seeking to enforce Prop 65 and subject to substantial penalties.