Form No. 3329–946

1332 Power Shift®

Snowthrower

Model No. 38087–240000001 and Up

Parts Catalog

Ordering Replacement Parts

To order replacement parts, please supply: the part number, the quantity, and the description of each part desired.

Understanding Reference Numbers

Each identified part in an illustration has a reference number. The reference number for a part also appears in the parts list, along with other information about the part.

This catalog uses two special reference number formats, one to indicate parts in a service assembly and another to indicate the quantity of a given part in an illustration.

Service Assembly Reference Numbers

Parts in service assemblies have reference numbers in the form **a:b.** The **a** represents the reference number of the entire service assembly and the **b** represents a sequential number unique to each part within the service assembly.

For example, a wheel assembly might be identified by reference number **6**, the tire by **6:1**, the valve by **6:2**, and the wheel by **6:3**. When you order the assembly identified by reference number 6, you receive all parts identified by reference numbers 6:1, 6:2, and 6:3. However, you may also order any part individually.

Reference numbers of this type appear in illustrations and in part lists.

Reference Numbers Indicating Quantity

In an illustration, if a reference number indicates more than one part, the reference number has the form **nX y.** The **n** represents the quantity of the part, the **X** is the multiplication symbol, and the **y** represents the reference number.

For example, in an illustration, the reference number **2X 37** means that two of the parts identified by reference number 37 are indicated.

© The TORO Company — 2003
All Rights Reserved

Contents

Description	Page
Housing and Engine Frame Assembly	3
32in Auger Gearcase Assembly Part No. 74–1562	5
Engine and Transmission Assembly	6
Traction Gearcase Assembly Part No. 66–8030	7
Power Shift Control Assembly	9
Handle and Control Assembly	10
Headlamp Assembly Part No. 54–9871	11
Lower Traction Assembly	12
Carburetor Assembly Part No. 640105	13
Tecumseh Engine Assembly Model No. OHSK130–223819E	14
Tecumseh Engine Assembly Model No. OHSK130–223819E	15
Tecumseh Engine Assembly Model No. OHSK130–223819E (continued)	16
Recoil Starter Part No. 590749	17
Electric Starter (110 Volt) Part No. 37105	18
Rewind Starter Part No. 590733 (Optional)	19

Part Description Abbreviations

Part descriptions in this catalog may include the following abbreviations.

Abbreviation	Meaning
AR	as required
ASM	assembly
CARR	carriage
DEG	degrees
FH	flat head
GA	gauge
HF	hex flange
HH	hex head
HHF	hex head flange
HLH	hex lag head
HJ	hex jam
HOC	height-of-cut
HS	hex socket
HSBH	hex socket button head
HSFH	hex socket flat head
HSH	hex socket head
HWH	hex washer head
HWHTF	hex washer head thread forming
HYD	hydraulic
INC	incorporated
LH	left hand
NI	nylon insert
PPH	Phillips pan head
PTH	Phillips truss head
PTO	power take off
RH	right hand
SFH	slotted fillister head
SHH	slotted hex head
SQH	square head
SHWH	slotted hex washer head
SPH	slotted pan head
SRH	slotted round head
STD	standard
TAP	self tapping
TTH	Torx truss head
WH	wing head

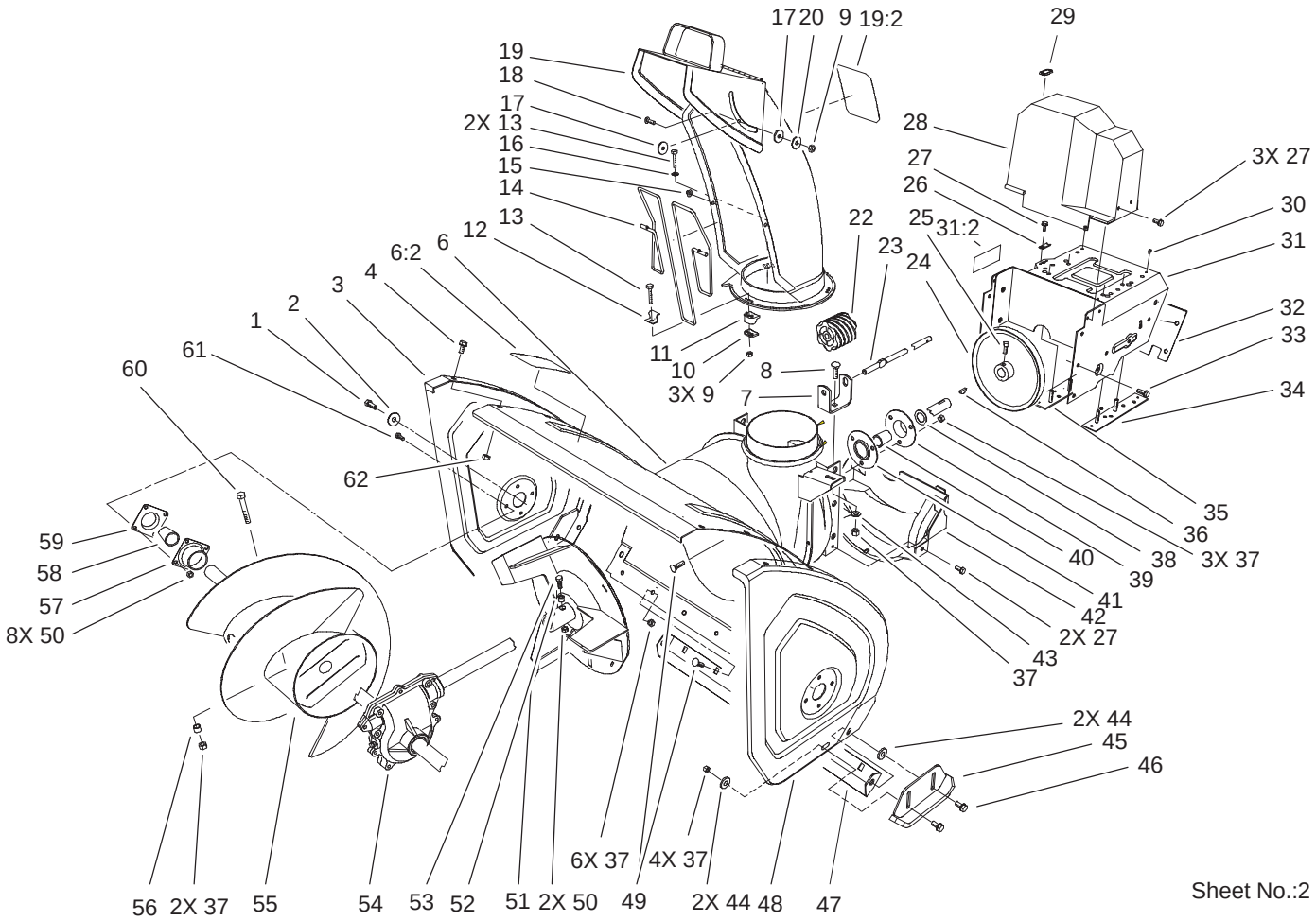

Sheet No.:2

Housing and Engine Frame Assembly

Ref. No.	Part No.	Qty.	Description
1	323–4	2	Screw–HH
2	3–0750	2	Washer
3	66–7821–01	1	Plate–Side, RH
4	3234–28	12	Screw–HHF
6	100–5458	1	Auger Housing ASM
6:2	94–2568	1	Decal–Warning, Auger
7	63–2180	1	Bracket–Worm, Chute
8	3230–2	1	Bolt–CARR
9	3296–2	4	Nut–Lock
10	63–2670	3	Plate–Retainer, Chute
11	62–1430	3	Retainer–Chute
12	63–3130	1	Clip–Guard, Chute
13	3274–13	3	Screw–HSH
14	63–3020	1	Guard–Chute
15	3290–326	2	Nut–Push
16	3256–14	1	Washer–Flat
17	63–2900	2	Washer–Plastic
18	32122–32	1	Screw
19	95–2662	1	Chute
19:2	94–2559	1	Decal – Danger
20	3256–61	1	Washer–Flat
22	62–0820	1	Gear–Worm
23	62–1720	1	Rod–Chute, Lower
24	62–1300	1	Pulley–Impeller
25	3242–4	2	Screw–Set, SQH
26	63–2300	1	Retainer–Cable

Ref. No.	Part No.	Qty.	Description
27	32144–4	6	Screw–HWH
28	63–2080	1	Cover–Belt, Upper
29	63–3290	1	Cover–Cable
30	3269–23	4	Rivet–Pop
31	100–5451	1	Engine Frame ASM
31:2	94–2575	1	Decal–Adjustment
32	62–1440–01	1	Cover–Frame, Engine
33	32144–14	6	Screw–HWH
34	68–4110	1	LH Frame Plate ASM
35	68–4100	1	RH Frame Plate ASM
36	3257–23	1	Key–Woodruff
37	3296–29	16	Nut–Lock, NI
38	252–80	1	Washer–Thrust
39	26–6110	1	Flange–Cup, Bearing
40	63–3450	1	Bearing–Ball
41	26–6120	1	Flange–Cup, Bearing
42	68–8410	1	Cover–Belt, Lower
43	3256–23	1	Washer–Flat
44	52–2861	4	Washer
45	74–1440–01	2	Skid ASM
46	3234–5	4	Screw
47	66–7760–01	1	Blade–Scraper
48	66–7831–01	1	Plate–Side, LH
49	3230–23	11	Screw–CARR
50	3296–42	10	Nut–Lock, NI
51	66–7920–03	1	Impeller–4 Blade

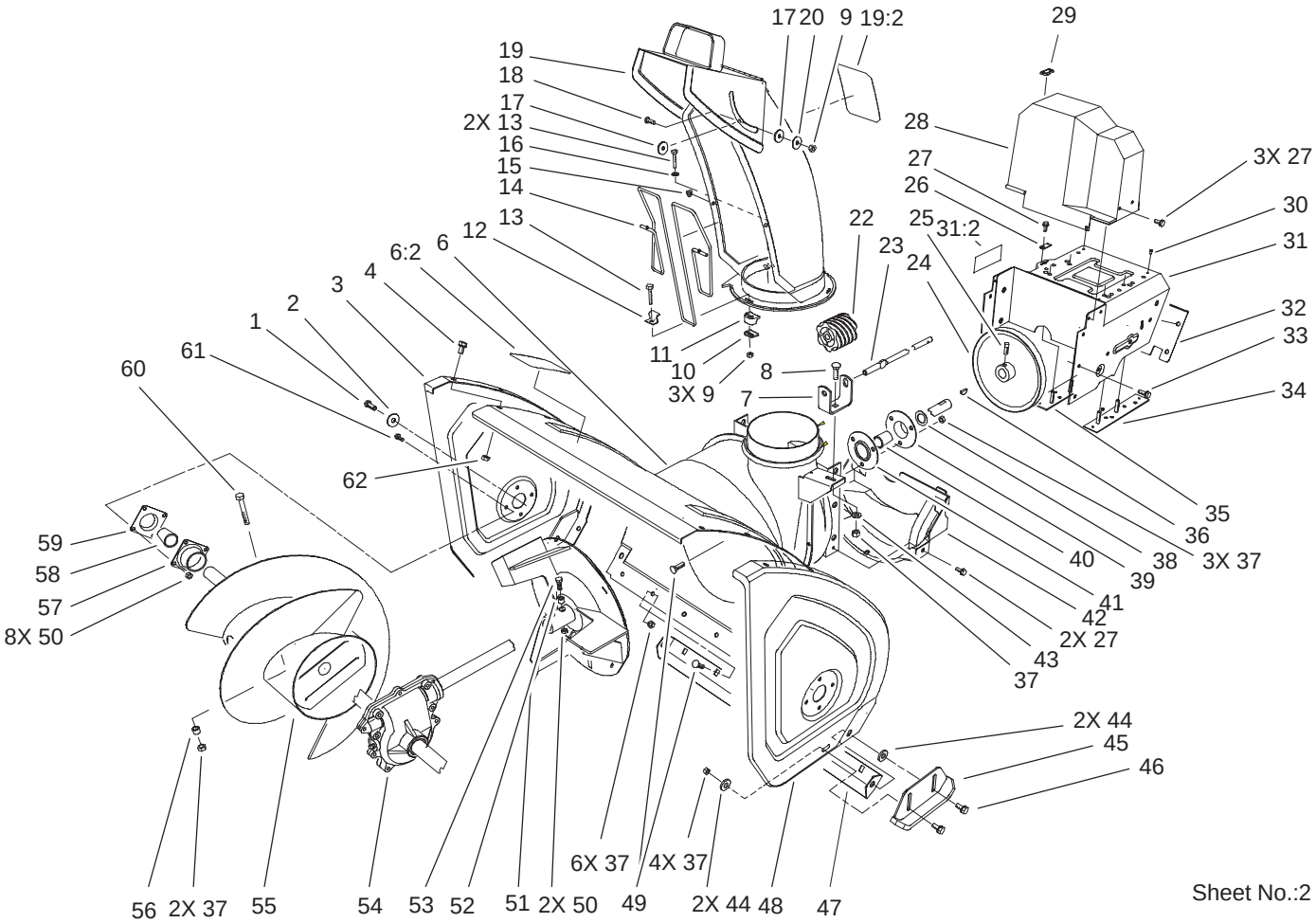

Housing and Engine Frame Assembly (continued)

Ref. No.	Part No.	Qty.	Description
52	66–8010	2	Spacer–Hub, Impeller
53	321–44	2	Screw–HHF
54	74–1562	1	32in Auger Gearcase Asm
*55	68–7462–03	1	Auger–LH
55	68–7452–03	1	Auger–RH
56	25–5090	2	Spacer–Hub, Auger
57	20–0990	2	Bearing–Flange, Front
58	20–0980	2	Bearing
59	20–1000	2	Bearing–Flange, Rear
60	322–12	2	Screw–HH
61	321–3	8	Screw–HH
62	3296–47	12	Nut–Lock, NI

Ref. No.	Part No.	Qty.	Description

* Not illustrated

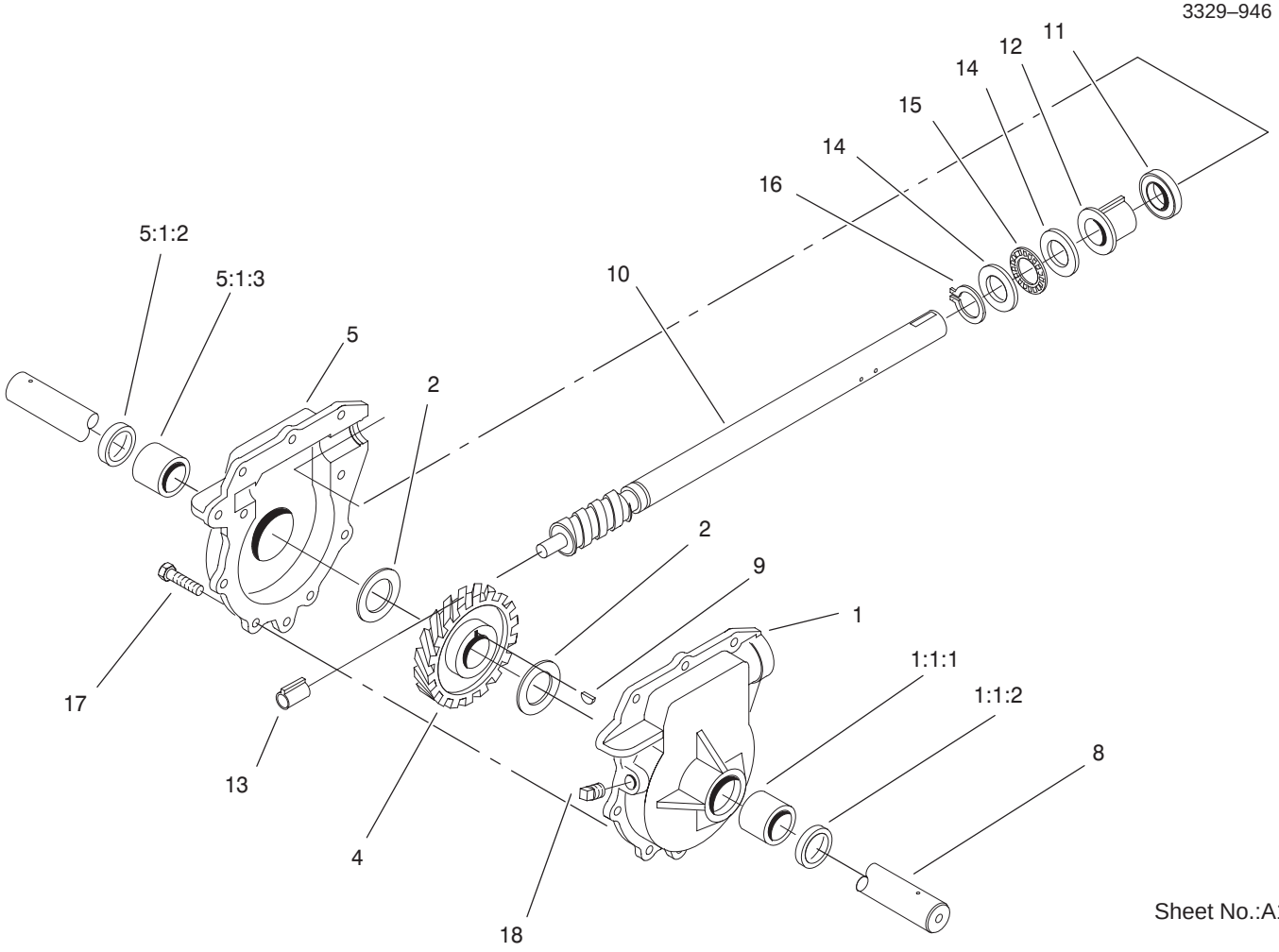

Sheet No.:A1

32in Auger Gearcase Assembly Part No. 74–1562

Ref. No.	Part No.	Qty.	Description
1	74–1570	1	LH Auger Gearcase ASM
1:1:1	256–237	1	Bushing
1:1:2	7–0045	1	Oil Seal
2	252–71	2	Washer–Thrust
4	62–0120	1	Gear–Helical
5	74–1580	1	RH Auger Gearcase ASM
5:1:2	7–0045	1	Oil Seal
5:1:3	256–237	1	Bushing
8	62–1532	1	Shaft–Auger
9	3257–10	1	Key–Woodruff
10	66–7811	1	Shaft–Impeller
11	253–149	1	Seal–Oil
12	37–6560	1	Bushing–Input
13	62–1150	1	Bushing–Worm
14	252–78	2	Bearing–Thrust
15	252–76	1	Bearing–Thrust
16	32151–33	1	Ring–Retaining, Ext.
17	32144–110	9	Screw–HWH
18	281–1	1	Plug–Pipe, SQH

Ref. No.	Part No.	Qty.	Description

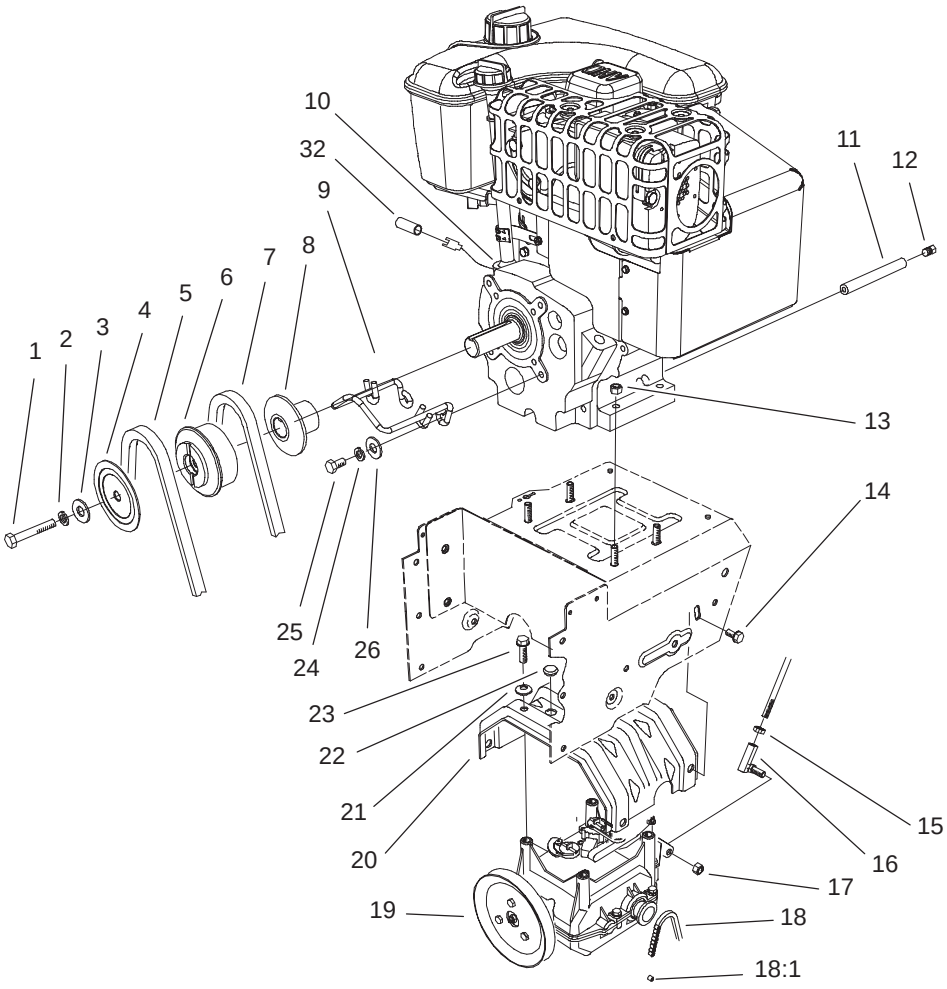

Sheet No.:3

Engine and Transmission Assembly

Ref. No.	Part No.	Qty.	Description
1	3212–8	1	Screw–HH
2	3253–6	1	Washer–Lock
3	3256–41	1	Washer–Flat
4	62–0940	1	Sheave–Half, Impeller
5	63–2967	1	V Belt
6	62–0930	1	Pulley–Engine, Center
7	63–2955	1	V–Belt, Traction
8	62–0920	1	Sheave–Half, Traction
9	100–3432	1	Guide–Belt
☆10		1	Engine–13hp Tecumseh Ohsk 130–223819e
11	289–34	1	Nipple–Pipe
12	288–2	1	Cap–Pipe
13	32128–20	4	Nut–HF
14	3234–7	4	Screw–HHF
15	3220–3	1	Nut–Jam
16	78–2920	1	Ball–Joint
17	3296–6	1	Nut–Lock, NI
18	63–2930	1	Chain
18:1	2710–15	1	Link–Offset
19	66–8030	1	Traction Gearcase ASM
20	63–2990–03	1	Transmission Frame ASM
21	3290–461	4	Washer–Spring

Ref. No.	Part No.	Qty.	Description
22	95–7947	2	Cap–Plug
23	11–0590	4	Screw–HWH, Thd Form
24	3253–4	2	Washer–Lock
25	3210–3	2	Screw–HH
26	3256–41	2	Washer–Flat

☆ Not serviced separately

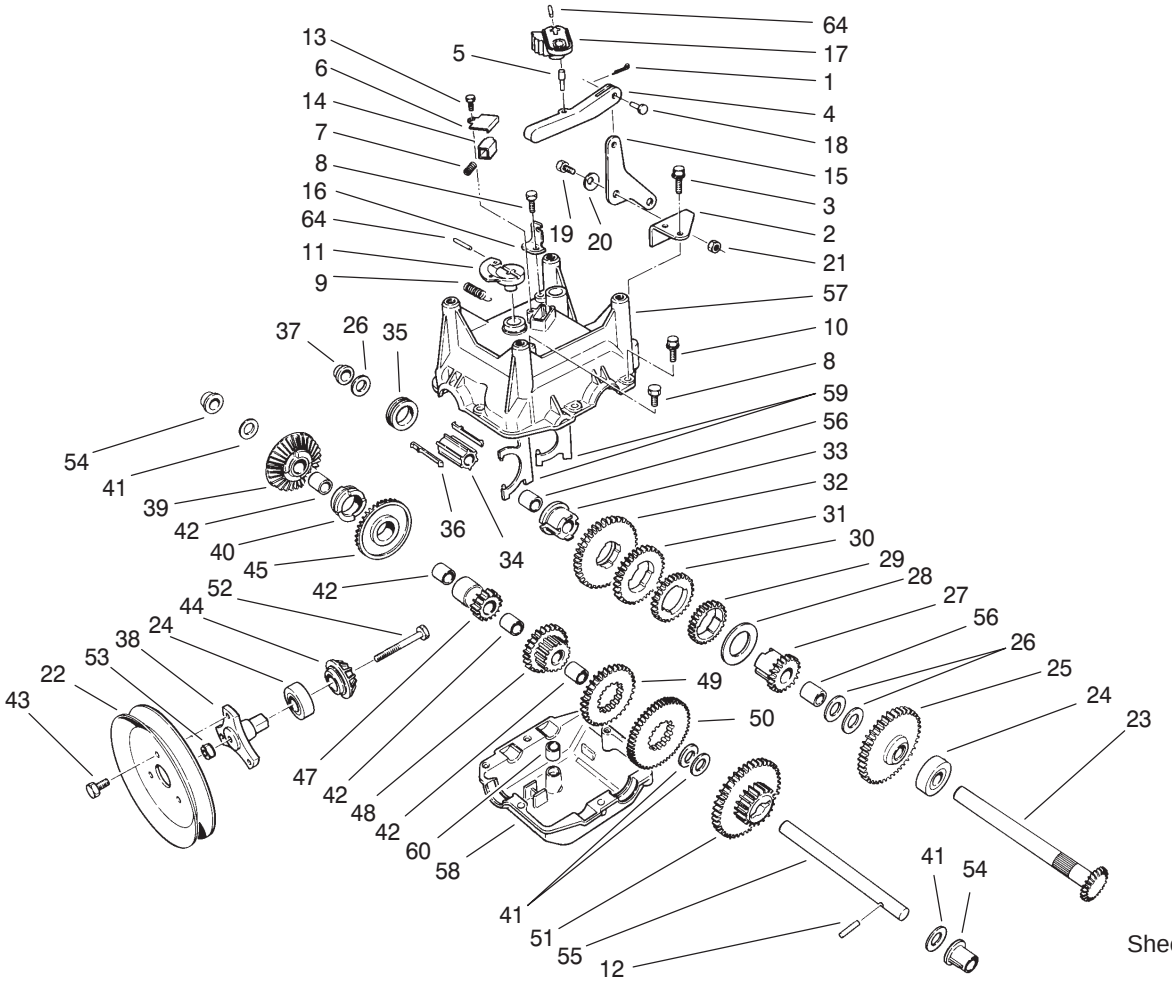

Sheet No.:A2

Traction Gearcase Assembly Part No. 66–8030

Ref. No.	Part No.	Qty.	Description
1	3272–1	1	Pin–Cotter
2	62–1190	1	Bracket–Bellcrank
3	32104–95	2	Screw–HWH
4	62–0860	1	Link–Shift, Gear
5	63–2190	1	Pin–Link, Gear Shift
6	62–1690	1	Cover–Detent
7	63–2890	1	Spring–Detent
8	32144–4	2	Screw–HWH
9	63–2920	1	Spring–Extension
10	32144–86	6	Screw–HH
11	62–0880	1	Lever
12	32121–106	1	Pin–Spring
13	32104–71	1	Screw–HWH
14	62–1020	1	Button–Detent
15	63–2600	1	Bellcrank
16	62–1740	1	Bracket–Cable
17	62–0870	1	Lever–Shift, Gear
18	283–3	1	Pin–Clevis
19	63–3410	1	Screw–Shoulder
20	3290–477	1	Washer–Curved
21	3296–42	1	Nut–Lock, NI
22	62–1310	1	Traction–Sheave, Half
23	62–1080	1	Shaft–Output
24	100–1048	2	Bearing–Ball
25	62–0370	1	Gear, 41 T
26	252–59	3	Bearing–Thrust

Ref. No.	Part No.	Qty.	Description
27	62–0340	1	Gear–Sleeve, 19 T
28	63–2280	1	Washer–Thrust
29	62–0250	1	Gear, 29 T
30	62–0200	1	Gear, 27 T
31	62–0220	1	Gear, 34 T
32	62–0240	1	Gear, 45 T
33	62–0320	1	Sleeve–Gear
34	68–4320	1	Sleeve–Shift
35	62–0430	1	Collar–Shift
36	62–0310	2	Key–Shift
37	62–1180	1	Bushing–Flange, Output
38	62–0380	1	Hub–Pulley
39	67–5860	1	Gear–Bevel, Rev, 36 T
40	67–5880	1	Collar–Shift
41	257–10	4	Washer–Thrust
42	62–1160	4	Bushing
43	12–3270	3	Screw
44	62–0350	1	Pinion–Bevel
45	67–5870	1	Gear–Bevel, 36 T
47	62–0500	1	Gear–Bevel, 15 T
48	68–4310	1	Gear, 26 T
49	62–0210	1	Gear, 33 T
50	62–0260	1	Gear, 51 T
51	62–0360	1	Gear, 19/41 T
52	321–15	1	Screw–HH

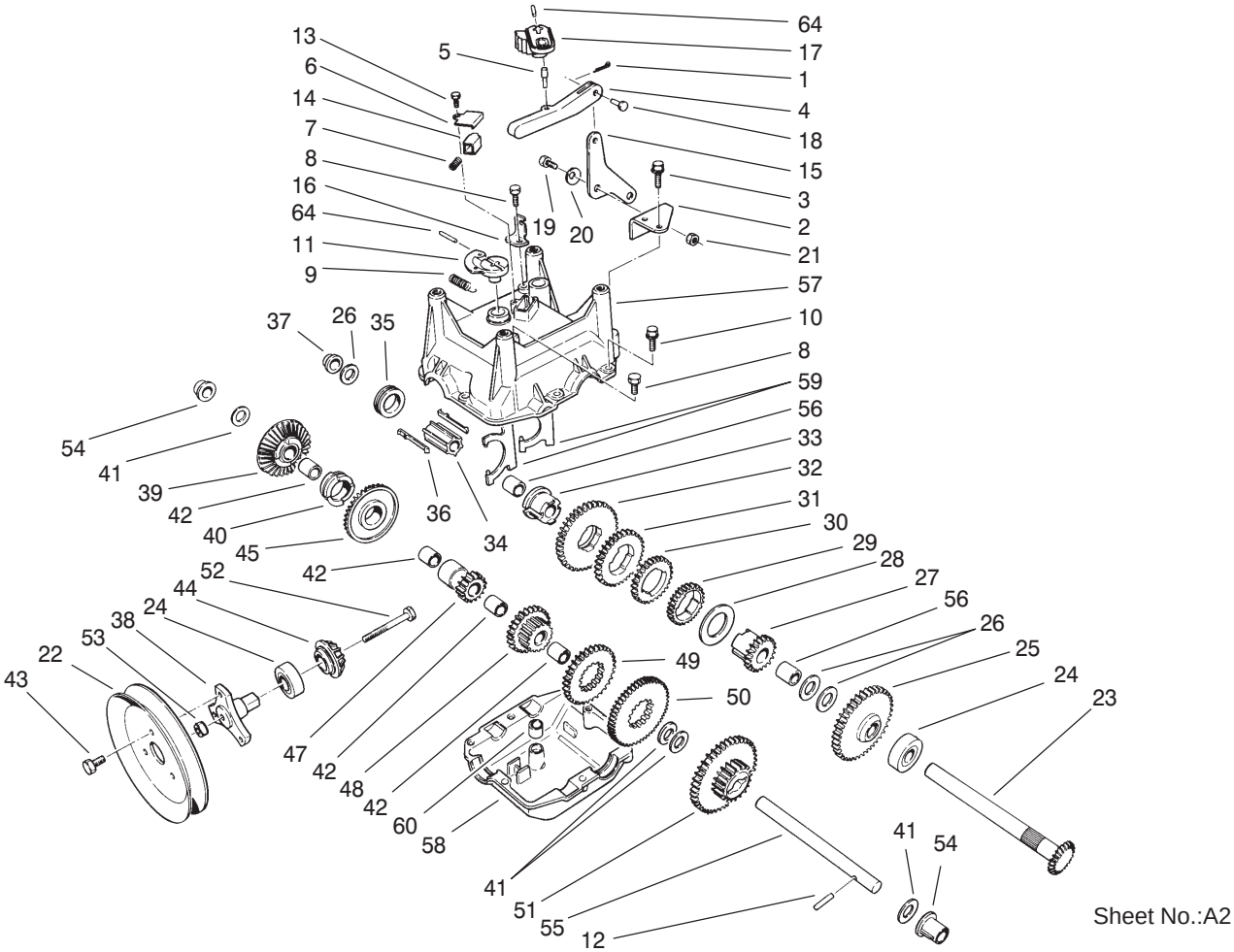

Sheet No.:A2

Traction Gearcase Assembly Part No. 66–8030 (continued)

Ref. No.	Part No.	Qty.	Description
53	32128–32	1	Nut–HHF
54	62–1170	2	Bushing–Intermediate
55	62–0330	1	Shaft–Intermediate
56	62–1350	2	Bushing–Output
57	62–0490	1	Gearcase–Upper, Casing
58	62–0480	1	Gearcase–Lower, Casing
59	62–1040	2	Yoke–Shift
60	29–9570	1	Bushing–Yoke
64	32121–120	2	Pin–Spring

Ref. No.	Part No.	Qty.	Description

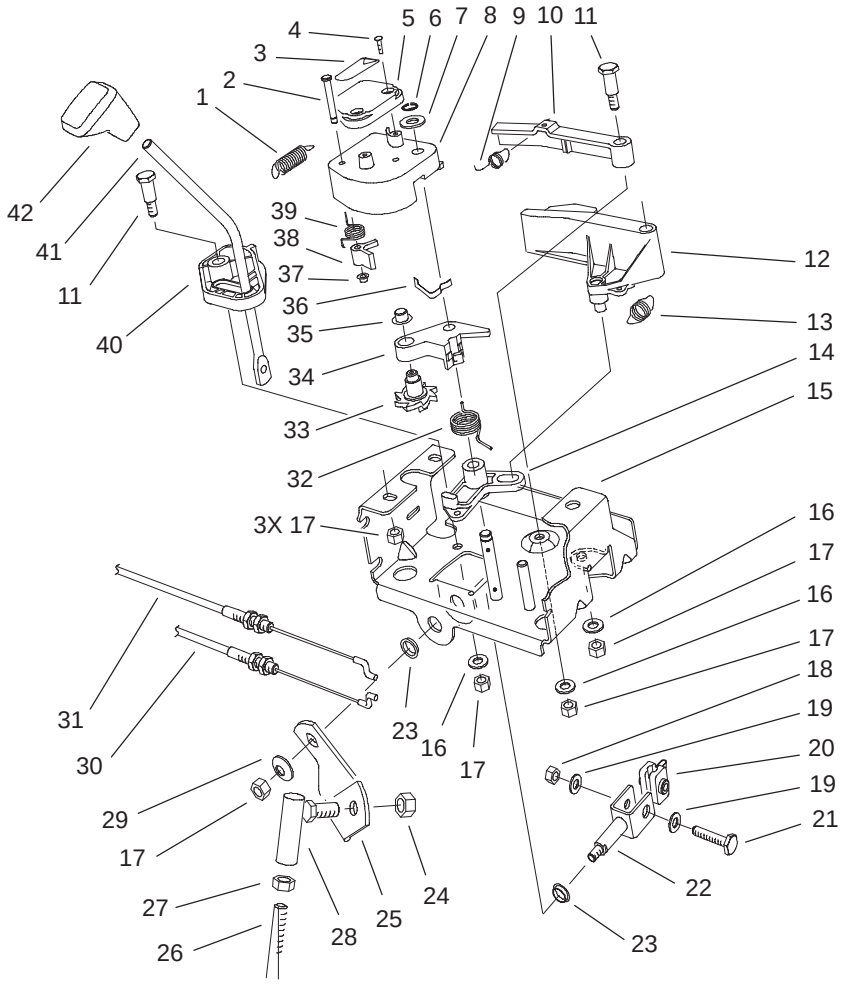

Sheet No.:4

Power Shift Control Assembly

Ref. No.	Part No.	Qty.	Description
1	63–2220	1	Spring–Extension
2	63–2610	1	Pin–Tang
3	63–2480	1	Decal–Number 2
4	94–6961	2	Screw
5	62–1140	1	Cover–Latch
6	32120–46	1	Ring–Retaining
7	257–9	1	Washer–Thrust
8	62–1100	1	Lever Latch
9	63–2240	1	Spring–Extension
10	62–1700	1	Lever–Lockout
11	63–2650	2	Screw–Shoulder
12	62–1130	1	Lever–Reverse
13	63–2230	1	Spring–Extension
14	62–1120	1	Lever–Reverse, Switch
15	63–2150–03	1	Control Frame ASM
16	3256–23	3	Washer–Flat
17	3296–29	7	Nut–Lock, NI
18	3296–42	1	Nut–Lock, NI
19	3256–1	2	Washer–Flat
20	67–9250	1	Retainer–Rod, Shift
21	321–9	1	Screw–HH
22	66–7730	1	Clevis ASM
23	256–296	2	Bushing
24	3296–6	1	Nut–Lock, NI
25	63–2630	1	Bracket–Shift

Ref. No.	Part No.	Qty.	Description
26	63–2830	1	Rod–Bent Shift, Lower
27	3220–3	1	Nut–Jam
28	78–2920	1	Ball–Joint
29	3290–456	1	Washer–Belleville
30	63–2210	1	Cable–Gearbox
31	63–2200	1	Cable–Arm, Latch
32	63–2270	1	Spring–Torsion
33	62–0170	1	Wheel–Index
34	62–1110	1	Lever–Wheel, Index
35	3290–320	1	Retainer–Push On
36	62–1710	1	Spring–Flat
37	3290–422	1	Nut–Push
38	62–0180	1	Tang–Index
39	62–1650	1	Spring–Torsion
40	62–1470	1	Base–Lockout
41	67–9240	1	Rod–Shift
42	62–1290	1	Knob–Shift

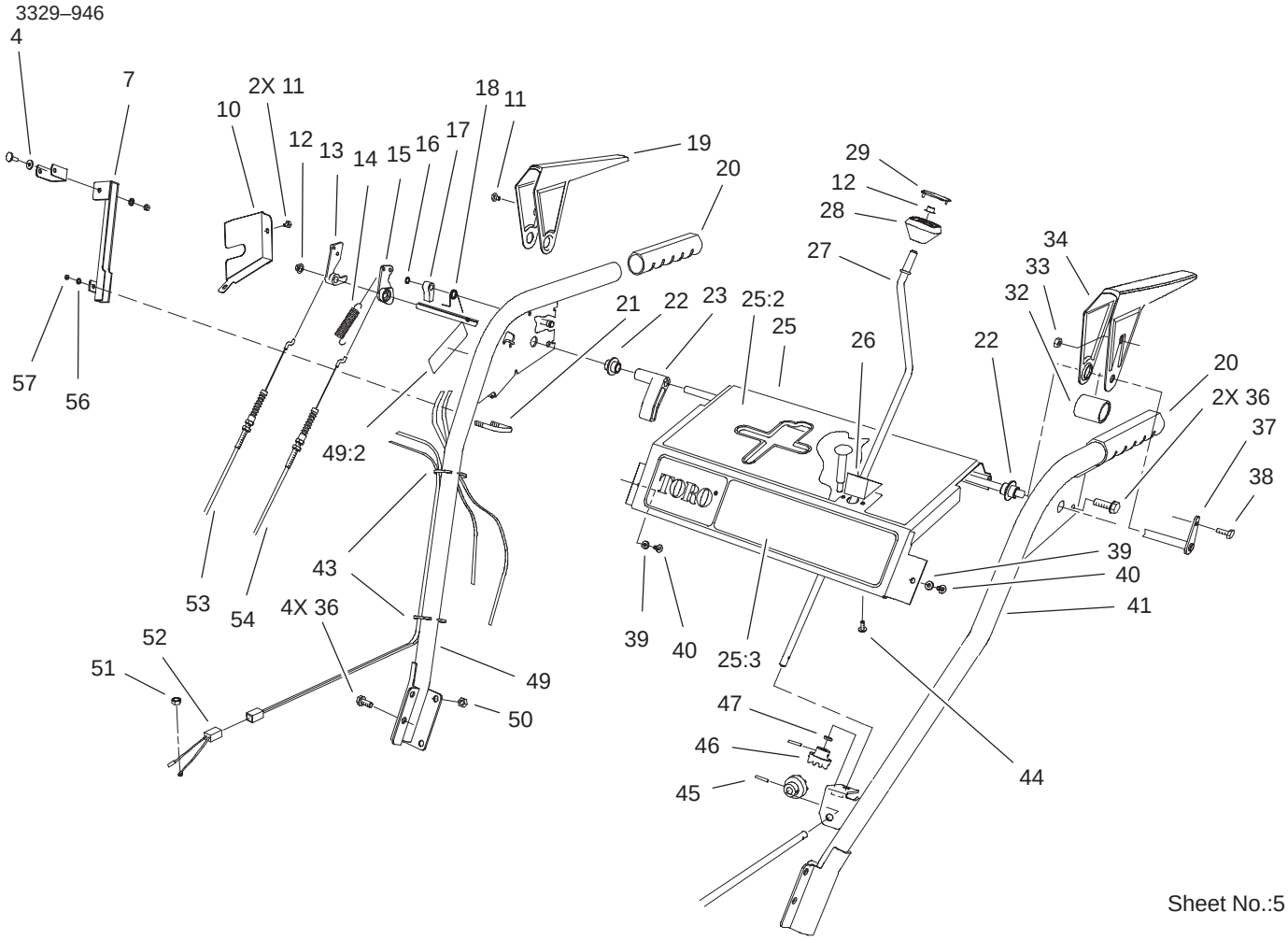

Sheet No.:5

Handle and Control Assembly

Ref. No.	Part No.	Qty.	Description
4	3256–26	1	Washer–Flat
7	68–7110–03	1	Mount–Light
10	63–2170–03	1	Cover–Lock, Lever
11	2210–250	3	Screw–HH
12	3290–320	2	Retainer–Push On
13	62–0300	1	Tang–Locking
14	88–0810	1	Spring–Extension
15	62–0290	1	Cam–Release
16	32151–66	1	E–Ring–Retainer
17	62–0280	1	Latch–Locking
18	63–2910	1	Spring–Torsion
19	62–1050–03	1	Lever–Traction, RH
20	66–7850	2	Grip–Handle
21	68–7140	1	U–Bolt
22	62–1070	2	Bushing–Lever
23	62–1640	1	Lever–Trip
25	100–3579	1	Control Panel ASM
25:2	99–3229	1	Decal–Control
25:3	100–3440	1	Decal – Front Panel
26	62–1490	1	Plate–Guide
27	63–2160	1	Crank–Rod, Chute
28	62–1320	1	Knob–Control, Chute
29	62–1520	1	Cover–Knob
32	63–3380	1	Spacer–Lever, Traction
33	3296–2	1	Nut–Lock

Ref. No.	Part No.	Qty.	Description
34	62–1060–03	1	Lever–Traction, LH
36	32144–14	6	Screw–HWH
37	63–2030	1	Cross Rod ASM
38	3290–359	1	Screw–HWH
39	3256–14	2	Washer–Flat
40	32104–76	2	Screw
41	66–8091–03	1	LH Handle ASM
43	3290–378	2	Tie–Cable
44	94–6961	2	Screw
45	32121–50	2	Pin–Spring
46	62–1460	2	Gear–Universal
47	62–1230	1	Washer–Rubber
49	100–3598	1	Handle ASM
49:2	94–2575	1	Decal–Adjustment
50	3296–47	4	Nut–Lock, NI
51	3217–6	1	Nut–Hex
52	54–9810	1	Wire ASM
53	63–2700	1	Cable–Impeller
54	63–2710	1	Cable–Traction
56	3256–23	2	Washer–Flat
57	3296–29	2	Nut–Lock, NI

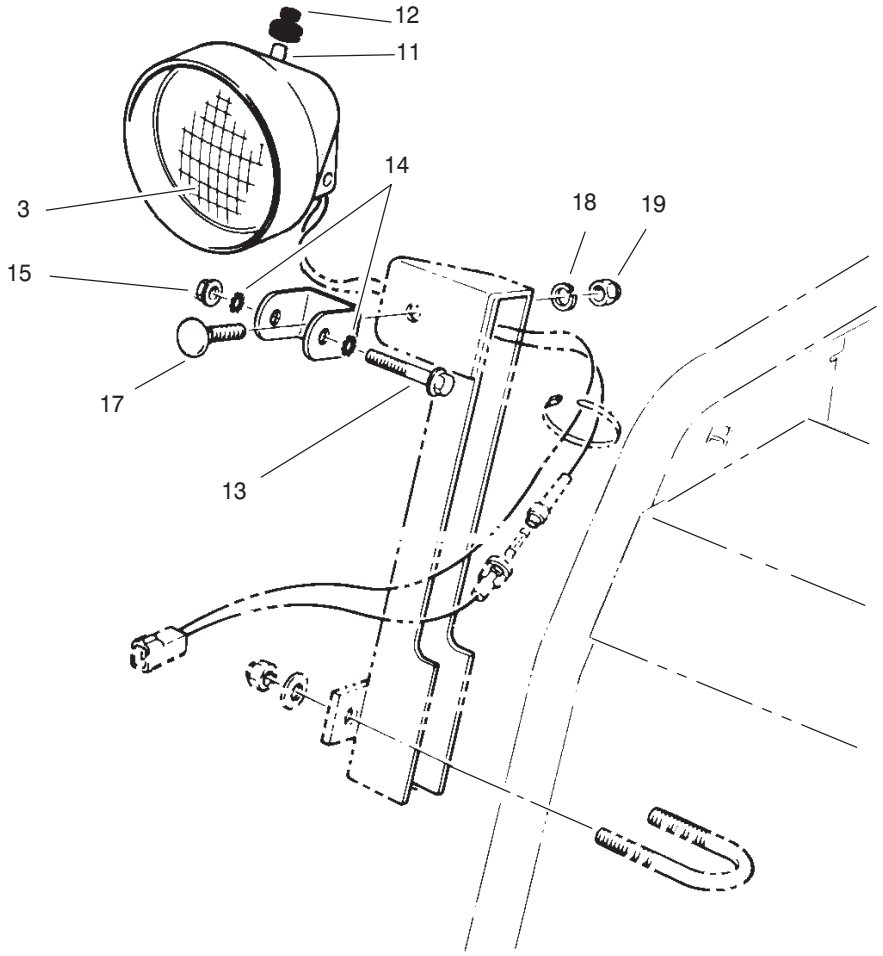

Sheet No.:A3

Headlamp Assembly Part No. 54–9871

Ref. No.	Part No.	Qty.	Description
*1	54–9871	1	Headlamp ASM
3	218–16	1	Beam–Sealed
11	218–553	1	Switch ASM
12	92–6033	1	Boot–Switch
13	322–11	1	Screw–HH
14	3255–8	2	Washer–Lock
15	32128–29	1	Locknut–Flange
17	3231–22	1	Screw–CARR
18	3253–21	1	Washer–Lock
19	3217–7	1	Nut–Hex

Ref. No.	Part No.	Qty.	Description

* Not illustrated

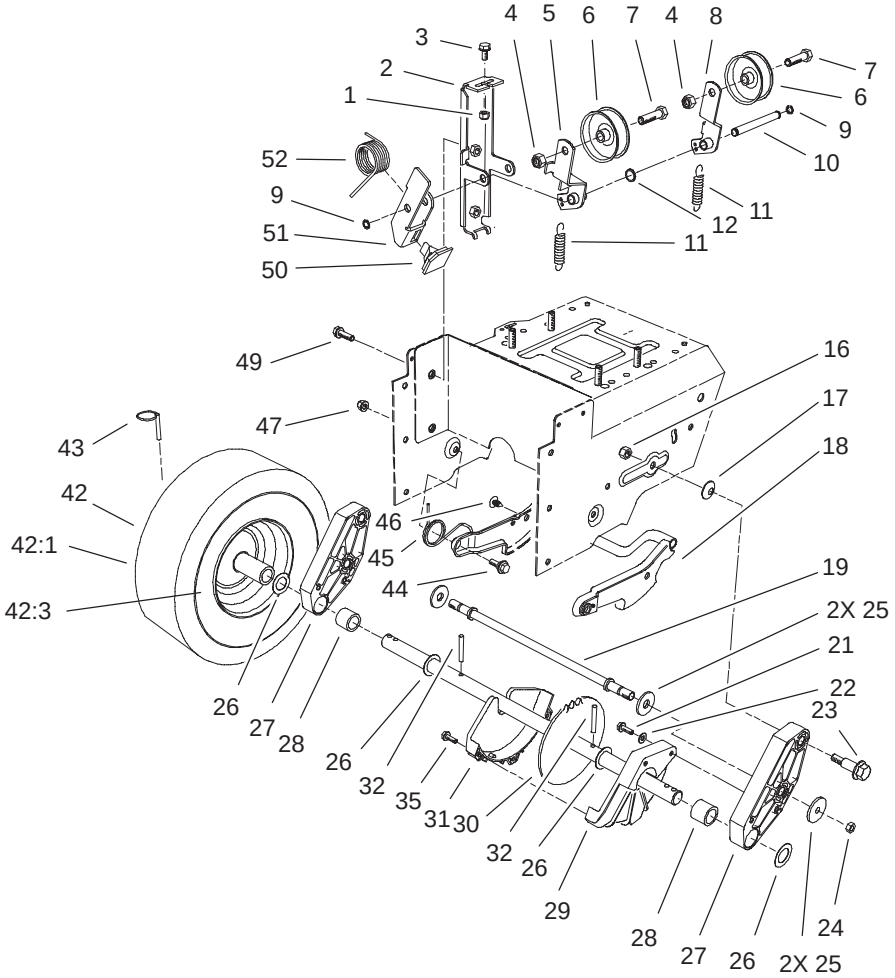

Sheet No.:6

Lower Traction Assembly

Ref. No.	Part No.	Qty.	Description
1	3296–42	1	Nut–Lock, NI
2	63–2850	1	Idler Arm Bracket ASM
3	3234–13	1	Screw–HHF
4	3296–59	2	Nut–Lock, NI
5	93–8046	1	Impeller Idler Arm ASM
6	3–4244	2	Pulley–Idler
7	323–7	2	Screw–HH
8	93–8045	1	Traction Idler Arm ASM
9	32120–46	2	Ring–Retaining
10	62–0970	1	Pin–Idler
11	63–2870	2	Spring–Extension
12	3256–38	1	Washer–Flat
16	3296–39	2	Nut–Lock, NI
17	3290–461	2	Washer–Spring
18	62–0470–03	1	Latch ASM
19	66–7720	1	Rod–Latch
21	32144–4	2	Screw–HWH
22	3256–1	2	Washer–Flat
23	62–1330	2	Bolt–Shoulder
24	3296–23	2	Nut–Lock, NI
25	63–3340	4	Washer–Support
26	252–80	4	Washer–Thrust
27	66–7740	2	Pivot Arm ASM
28	63–2250	2	Bushing–Axle

Ref. No.	Part No.	Qty.	Description
29	62–1010	1	Guard–Chain, LH
30	63–2112	1	Axle
31	62–1000	1	Guard–Chain, RH
32	32121–9	2	Pin–Spring
35	94–4496	3	Screw–PPH
42	67–9230	2	Wheel & Tire Assembly
42:1	231–123	1	Tire
*42:2	232–48	1	Inner Tube
42:3	241–127	1	Rim–Wheel
43	3290–243	2	Pin–Lynch
44	5–2490	2	Screw–Shoulder
45	63–2740	1	Spring–Latch, Torsion
46	3290–476	1	Fastener–Panel
47	3296–47	2	Nut–Lock, NI
49	3234–7	2	Screw–HHF
50	66–8060	1	Pad–Brake
51	63–2820	1	Arm–Brake
52	100–5474	1	Spring–Torsion

* Not illustrated

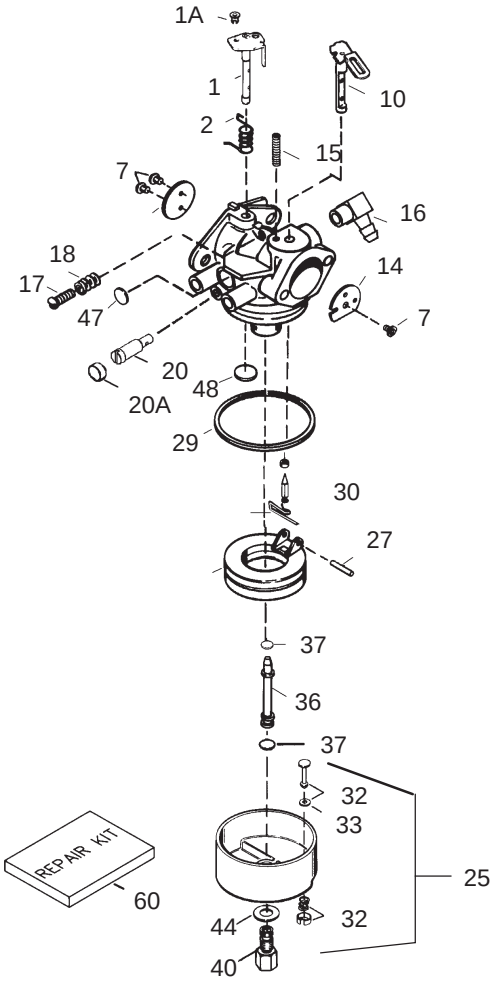

Sheet No.:

Carburetor Assembly Part No. 640105

Ref. No.	Part No.	Qty.	Description
1	632787	1	Throttle Shaft & Lever ASM
1A	36288	1	Bushing
2	631970	1	Throttle Return Spring
6	640107	1	Throttle Shutter
7	650506	4	Shutter Screw
10	632513	1	Choke Shaft & Lever ASM
14	632429A	1	Choke Shutter
15	630735	1	Choke Positioning Spring
16	632527	1	Fuel Fitting
17	651025	1	Idle Speed Screw
18	630766	1	Tension Spring
20	640016	1	Idle Restrictor Screw
20A	640053	1	Idle Restrictor Screw Cap
25	632594A	1	Float Bowl ASM (Incl. 32 & 33)
27	631024	1	Float Shaft
28	632802	1	Float
29	631028	1	Float Bowl O–Ring
30	631021	1	Inlet Needle, Seat, Clip (Incl. 31)
31	631022	1	Spring Clip
32	27136	1	Bowl Drain ASM

Ref. No.	Part No.	Qty.	Description
33	27554	1	Drain Plunger Gasket
36	640005	1	Main Nozzle Tube
37	632547	2	O–Ring, Main Nozzle Tube
40	640106	1	High Speed Bowl Nut
44	27110A	1	Bowl Nut Washer
47	630748	1	Welch Plug, Idle Mixture Well
48	631027	1	Welch Plug, Vent
60	632760	1	Repair Kit

Obtain Parts from Local Tecumseh Dealer.

Tecumseh Engine Assembly
Model No. OHSK130–223819E

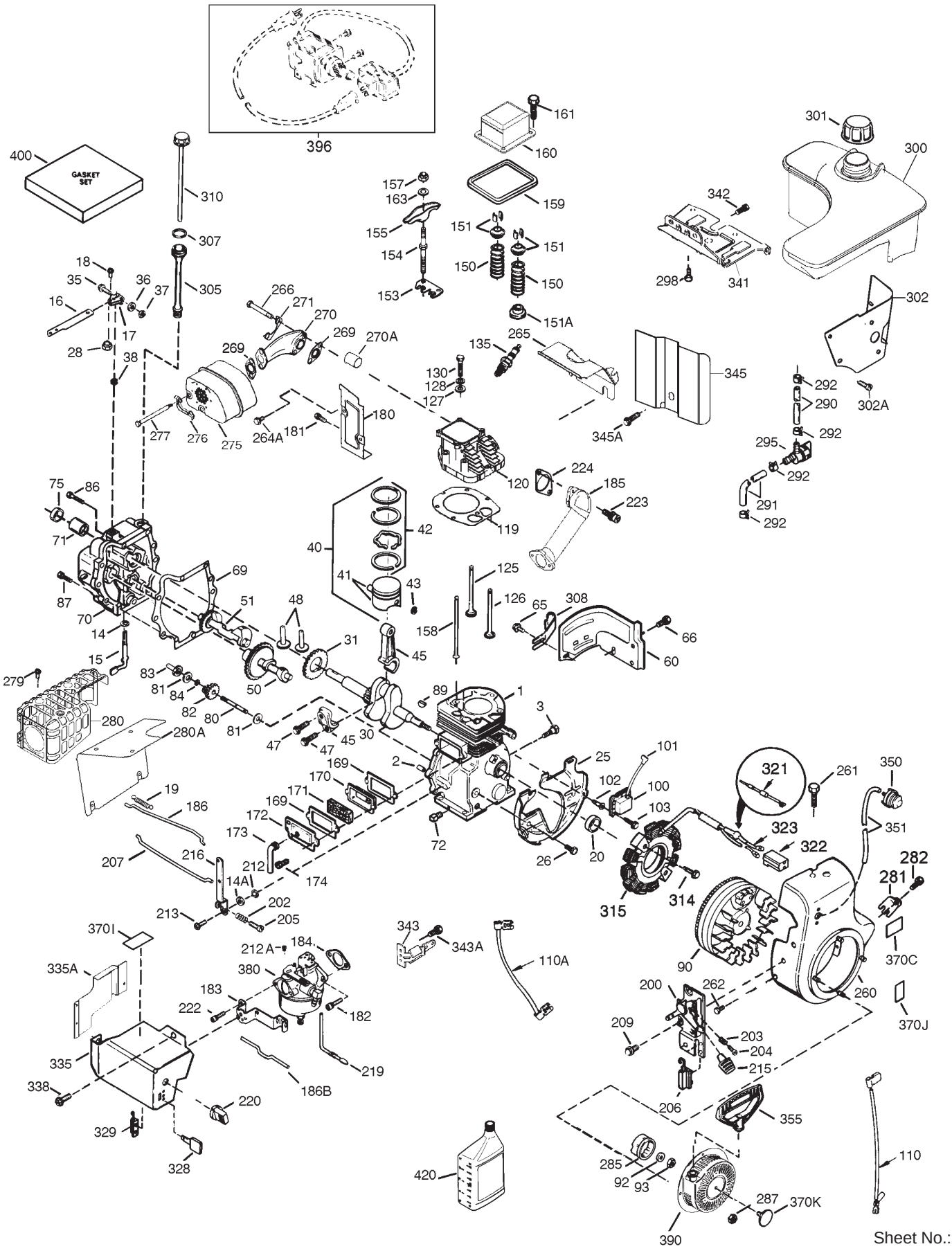

Tecumseh Engine Assembly
Model No. OHSK130–223819E

Ref. No.	Part No.	Qty.	Description
1	37083	1	Cylinder (Incl. 2, 20, 72 & 80)
2	27652	2	Dowel Pin
3	650820	2	Screw, 1/4–20 x1/2”
14	28277	1	Washer
14A	651057	1	Washer
15	35685	1	Governor Rod (Incl. 14 & 38)
16	35686A	1	Governor Lever (Incl. 212A)
17	29916	1	Governor Lever Clamp
18	651028	1	Screw –Torx T–15, 8–32 x 3/8”
19	35688	1	Throttle Spring
20	35319	1	Oil Seal
25	36460	1	Blower Housing Baffle
26	650561	2	Screw, 1/4–20 x 5/8”
28	30322	1	Lock Nut, 10–32
30	36706	1	Crankshaft
31	35327	1	Counterbalance Gear
35	29826	1	Screw, 10–32 x 3/4”
36	29918	1	Lock Washer
37	29216	1	Lock Nut, 10–32
38	29642	3	Retaining Ring
40	35776A	1	Piston, Pin & Ring Set (Std.)
40	35777A	1	Piston, Pin & Ring Set (.010” OS)
40	35778A	1	Piston, Pin & Ring Set (.020” OS)
41	35773A	1	Piston & Pin Ass’y (Std.) (Incl. 43)
41	35774A	1	Piston & Pin Ass’y (.010” OS) (Incl. 43)
41	35775A	1	Piston & Pin Ass’y. (.020” OS) (Incl. 43)
42	35779	1	Ring Set (Std.)
42	35780	1	Ring Set (.010” OS)
42	35781	1	Ring Set (.020” OS)
43	35772	2	Piston Pin Retaining Ring
45	36898	1	Connecting Rod ASM (Incl. 47)
47	651033	2	Connecting Rod Bolt
48	35313	2	Valve Lifter
50	35682A	1	Camshaft (MCR)
51	35315A	1	Counterbalance Weight
60	35316A	1	Blower Housing Extension
65	30200	1	Screw, 10–24 x 9/16”
66	30063	1	Screw – Torx, t–30, 1/4–20 x1/2”
69	35683	1	Cylinder Cover Gasket
70	35684A	1	Cylinder Cover (Incl. 14,15,38,71,75)
71	35377	1	Crankshaft Bushing
72	27642	1	Oil Drain Plug
75	35319	1	Oil Seal

Ref. No.	Part No.	Qty.	Description
80	35751	1	Governor Shaft
81	35479	2	Washer
82	35321	1	Governor Gear ASM
83	35322	1	Governor Spool
84	29193	1	Retaining Ring
86	650833	7	Screw, 1/4–20 x 1–3/16”
87	650832	1	Screw, 1/4–20 x 1–11/16”
89	32589	1	Flywheel Key
90	611094	1	Flywheel (W/Ring Gear)
92	650880	1	Lock Washer
93	650881	1	Flywheel Nut
100	35135A	1	Solid State Ignition
101	610118	1	Spark Plug Cover
102	651024	2	Solid State Mounting Stud
103	651007	2	Screw – Torx T–15, 10–24 x 15/16”
110	35187	1	Ground Wire
110A	37047	1	Ground Wire
119	36932	1	Cylinder Head Gasket
120	37491	1	Cylinder Head (Incl. 151A)
125	36934	1	Exhaust Valve (Std.)
125	36936	1	Exhaust Valve (1/32 OS)
126	36935	1	Intake Valve (Std.)
127	650691	6	Washer
128	650690	6	Belleville Washer
130	650697A	6	Screw, 5/16–18 x 2–12”
135	34645	1	Spark Plug (RN4C)
150	33507	2	Valve Spring
151	33508	2	Valve Spring Keeper
151A	35862	1	Intake Valve Seal
153	35949	1	Push Rod Guide
154	650945	2	Rocker Arm Stud
155	35950	2	Rocker Arm
157	650947	2	Jam Nut
158	35466	2	Push Rod
159	35952	1	Rocker Arm Cover Gasket
160	35953A	1	Rocker Arm Cover
161	30063	4	Screw – Torx T–30, 1/4–20 x 1/2”
163	650890	2	Lock Washer
169	27896A	2	Valve Cover Gasket
170	28423	1	Breather Body
171	28424	1	Breather Element
172	28425	1	Valve Cover
173	35350	1	Breather Tube
174	650128	2	Screw, 10–24 x 1/2”
180	37101	1	Blower Housing Extension
181	30200	2	Lock Nut, 10–32

Obtain Parts from Local Tecumseh Dealer.

Tecumseh Engine Assembly
Model No. OHSK130–223819E (continued)

Ref. No.	Part No.	Qty.	Description
182	650517	2	Screw – Torx T–30, 1/4–20 x 27/32”
183	34583A	1	Choke Bracket
184	33263	1	Carburetor To Intake Pipe Gasket
185	37085	1	Intake Pipe
186	35691	1	Governor Link
186B	36653	1	Choke Spring
200	35702	1	Control Bracket (Incl. 203 & 204)
202	36482	1	Compression Spring
203	31342	1	Compression Spring
204	651029	1	Screw – Torx T–10, 5–40 x 7/16”
205	651019	1	Screw – Torx T–10, 6–32 x 41/64”
206	610973	1	Terminal
207	35692	1	Choke Link
209	650821	2	Screw
212	30773A	1	Bushing
212A	36288	1	Bushing
213	650930	1	Screw, 10–32 x 5/8”
215	35438	1	Control Knob
216	35679	1	R.P.M. Adjusting Lever
219	35689	1	Choke Rod
220	35440	1	Choke Knob
222	28820	2	Screw, 10–32 x 1/2”
223	650971	2	Screw – Torx T–30, 5/16–18 x 7/8”
224	33515A	1	Intake Pipe Gasket
260	37092A	1	Blower Housing
261	650738	1	Screw, 1/4–20 x 5/8”
262	29747B	2	Screw – Torx T–40, 5/16–24 x 21/32”
264A	30063	1	Screw – Torx T–30, 1/4–20 x 1/2”
265	37086	1	Cylinder Head Cover
266	650876	2	Screw, 5/16–18 x 1–9/32
269	35762	2	Exhaust Gasket
270	37263	1	Manifold
270A	35829A	1	Exhaust Port Liner
271	35293	1	Locking Plate (Manifold)
275	37264	1	Muffler
276	35348	1	Locking Plate
277	650877	2	Screw, 5/16–18 x 4–12”
279	650821	4	Screw, 10–32 x 1/2”
280	37265	1	Heat Shield
280A	37106	1	Radiation Heat Shield
281	33013	1	Starter Bubble Cover
282	650760	1	Screw, 8–12 x 3/8”
285	35985B	1	Starter Cup
287	29752	4	Nut & Lock Washer, 1/4–28
290	30962	1	Fuel Line
291	29774	1	Fuel Line
292	26460	4	Fuel Line Clamp
295	35857	1	Fuel Shut–Off Valve
298	650665	2	Screw, 1/4–15 x 3/4”
300	37099	1	Fuel Tank (Incl. 292 & 301)
301	36246	1	Fuel Cap
302	37098	1	Fuel Tank Extension
302A	650821	3	Screw, 10–32 x 1/2”
305	35574	1	Oil Fill Tube
307	35499	1	O–Ring
308	35539	1	Fill Tube Clip
310	35700	1	Dipstick
314	650873	1	Screw, 1/4–20 x 3/4”
315	611104	1	Alternator Coil (3/5) (Incl. 321–323)
321	611161	1	Diode
322	611142	1	Connector Body
323	611118	2	Terminal
328	35062	2	Ignition Keys
329	610973	1	Terminal
335	37096	1	Carburetor Cover
335A	37087	1	Carburetor Cover
338	650821	4	Screw, 10–32 x 1/2”
341	37093	1	Fuel Tank Bracket
342	792028	2	Screw, 5/16–18 x 7/8”
343	35079A	1	Key Switch Bracket
343A	651060	1	Screw, 10–32 x 23/64”
345	37097	1	Heat Baffle
345A	650821	1	Screw, 10–32 x 1/2”
350	570682A	1	Primer Assembly
351	32180C	1	Primer Line
355	590574	1	Starter Handle
370C	36501	1	Primer Decal
370I	37119	1	Warning Decal
370J	37226	1	Throttle Decal
370K	36695	1	Starter Decal
380	640105	1	Carburetor (Incl. Ref.# 184)
390	590749	1	Rewind Starter (Note: This engine could have been built with 590733 starter.)
396	37105	1	Electric Starter Motor (Optional) (110 Volt)
400	36947B	1	Gasket Set
420	730226A	1	SAE 5W30 4–Cycle Engine Oil (Quart)
	758216	1	Short Block

Obtain Parts from Local Tecumseh Dealer.

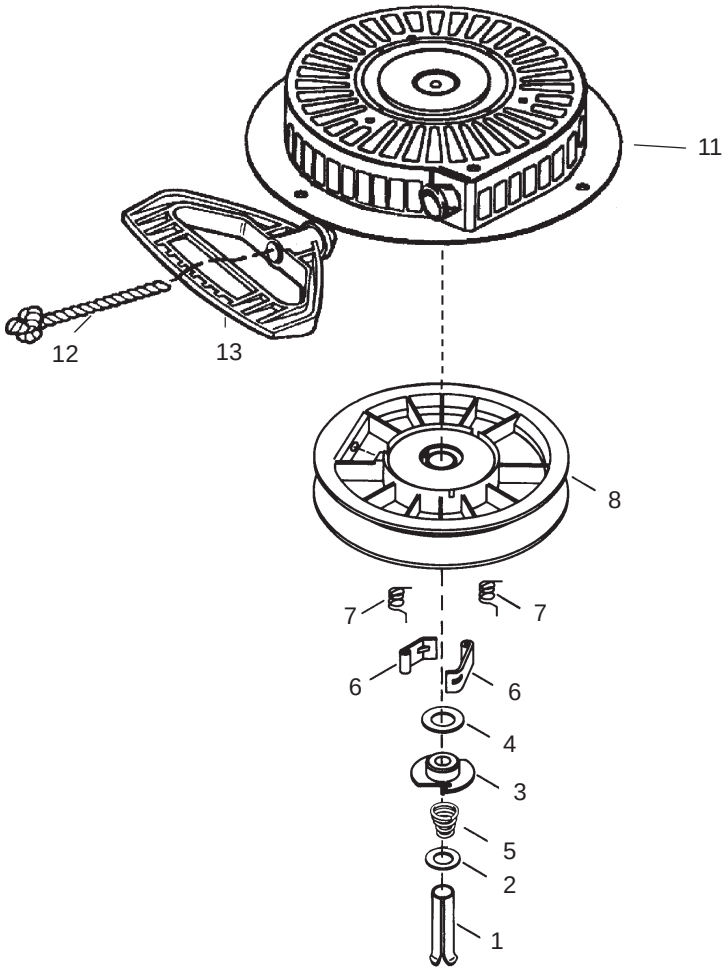

Sheet No.:

Recoil Starter Part No. 590749

Ref. No.	Part No.	Qty.	Description
1	590599A	1	Spring Pin (Incl. 4)
2	590600	1	Washer
3	590679	1	Retainer
4	590601	1	Washer
5	590678	1	Brake Spring
6	590680	2	Starter Dog
7	590412	2	Dog Spring
8	590682	1	Pulley & Rewind Spring ASM
11	590750A	1	Starter Housing ASM
12	590535	1	Starter Rope (Length 98” x 9/64” dia)
13	590574	1	Mitten Grip Handle

Ref. No.	Part No.	Qty.	Description

Obtain Parts from Local Tecumseh Dealer.

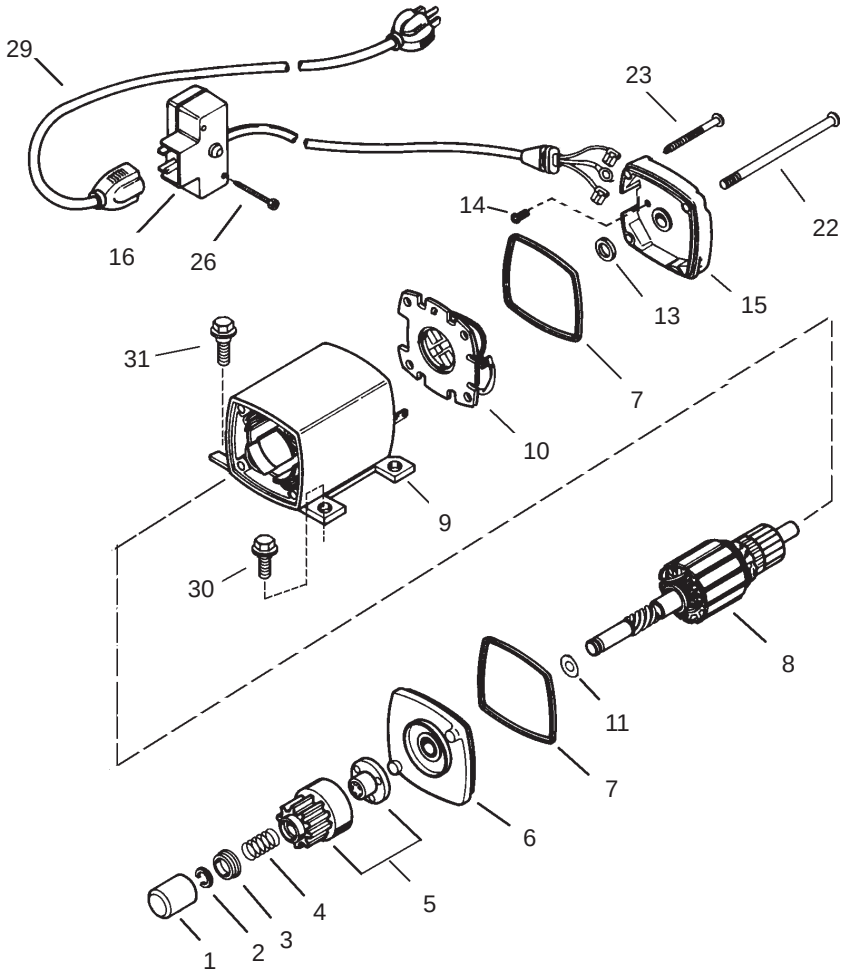

Sheet No.:

Electric Starter (110 Volt) Part No. 37105

Ref. No.	Part No.	Qty.	Description
1	33451	1	Dust Cover
2	33842	1	Retainer Ring
3	33430	1	Spring Retainer
4	33431	1	Anti–drift Spring
5A	37050	1	Gear & Nut (Incl. 2)
6	35449	1	Drive End Cap ASM (Incl. 7)
7	35450	2	O–Ring
8	35915	1	Armature
9	35451B	1	Housing ASM
10	35452A	1	Brush Card ASM
11	35911	1	Thrust Washer
13	590500	1	Thrust Washer
14	33441	1	Ground Screw
15	35453	1	Commutator End Cap ASM (Incl. 7)
16	35454	1	Switch Box ASM
22	35455	2	Case Bolt
23	35456	1	Ground Screw
26	650819	2	Screw, 6–32 x 2–1/2”
26	651032	2	Screw, 12–16 x 5/8”
29	32450B	1	Extension Cord (10’6”)
30	30063	2	Screw – Torx T–30, 1/4–20 x 1/2”
31	650820	2	Screw, 1/4–20 x 1/2”

Ref. No.	Part No.	Qty.	Description

Obtain Parts from Local Tecumseh Dealer.

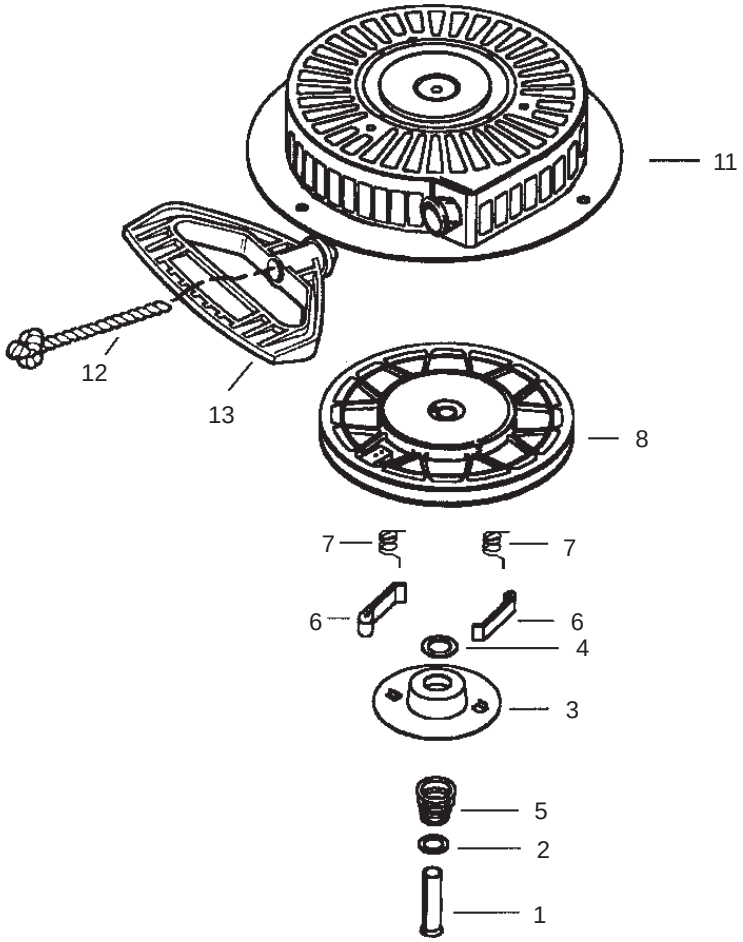

Sheet No.:

Rewind Starter Part No. 590733 (Optional)

Ref. No.	Part No.	Qty.	Description
1	590599A	1	Spring Pin (Incl. 4)
2	590600	1	Washer
3	590696	1	Retainer
4	590601	1	Washer
5	590697	1	Brake Spring
6	590698	2	Starter Dog
7	590699	2	Dog Spring
8	590709	1	Pulley & Rewind Spring ASM
11	590734A	1	Starter Housing ASM
12	590535	1	Starter Rope (Length 98” x 9/64” dia)
13	590574	1	Mitten Grip Handle

Ref. No.	Part No.	Qty.	Description

Obtain Parts from Local Tecumseh Dealer.


TORO®