Form Number 3329-951

CCR™ Powerlite® 325 Snowthrower

Model No. 38183 - 240000001 and up.

Parts Catalog

Ordering Replacement Parts

To order replacement parts, please supply: the part number, the quantity, and the description of each part desired.

Understanding Reference Numbers

Each identified part in an illustration has a reference number. The reference number for a part also appears in the parts list, along with other information about the part.

This catalog uses two special reference number formats, one to indicate parts in a service assembly and another to indicate the quantity of a given part in an illustration.

Service Assembly Reference Numbers

Parts in service assemblies have reference numbers in the form **a:b.** The **a** represents the reference number of the entire service assembly and the **b** represents a sequential number unique to each part within the service assembly.

For example, a wheel assembly might be identified by reference number 6, the tire by **6:**1, the valve by **6:**2, and the wheel by **6:**3. When you order the assembly identified by reference number 6, you receive all parts identified by reference numbers 6:1, 6:2, and 6:3. However, you may also order any part individually. Reference numbers of this type appear in illustrations and in part lists.

Reference Numbers Indicating Quantity

In an illustration, if a reference number indicates more than one part, the reference number has the form **nX y.** The **n** represents the quantity of the part, the **X** is the multiplication symbol, and the **y** represents the reference number.

For example, in an illustration, the reference number **2X 37** means that two of the parts identified by reference number 37 are indicated.

©The Toro Company - 2003
All Rights Reserved

Part Description Abbreviations

Part descriptions in this catalog may include the following abbreviations.

AR. . . . . as required
ASM. . . . . assembly
CARR. . . . . carriage
DEG. . . . . degrees
FH. . . . . flat head
GA. . . . . gauge
HF. . . . . hex flange
HH. . . . . hex head
HHF. . . . . hex head flange
HHFTF. . . . . hex head flange thread forming
HJ. . . . . hex jam
HLH. . . . . hex lag head
HOC. . . . . height-of-cut
HS. . . . . hex
HSBH. . . . . hex socket button head
HSFH. . . . . hex socket flat head
HSH. . . . . hex socket head
HWH. . . . . hex washer head
HWHTF. . . . . hex washer head thread forming
HYD. . . . . hydraulic
INC. . . . . incorporated
LH. . . . . left hand
NI. . . . . nylon insert
PPH. . . . . phillips pan head
PTH. . . . . phillips truss head
PTO. . . . . power take off
RH. . . . . right hand
SFH. . . . . slotted fillister head
SHH. . . . . slotted hex head
SHWH. . . . . slotted hex washer head
SPH. . . . . slotted pan head
SQH. . . . . square head
SRH. . . . . slotted round head
STD. . . . . standard
TAP. . . . . self tapping
TTH. . . . . torx truss head
WH. . . . . wing head

Footnotes

❶ Not illustrated

❷ Not serviced

Contents

Description	Page
Impeller Drive Assembly	3
Housing, Upper Shroud, and Chute Assembly	4
Impeller Assembly	5
Engine, Side Plate and Wheel Assembly	6
230 Volt Starter Assembly No. 105-2957	7
Handle and Lower Shroud Assembly	8
Carburetor Assembly No. 640086 Tecumseh Hsk635 Type 1723c	9
Engine Assembly Tecumseh No. Hsk635 1723c	10
Recoil Starter Assembly No. 590743 Tecumseh Hsk635 Type 1723c	12
Recoil Starter Assembly No.590712	13

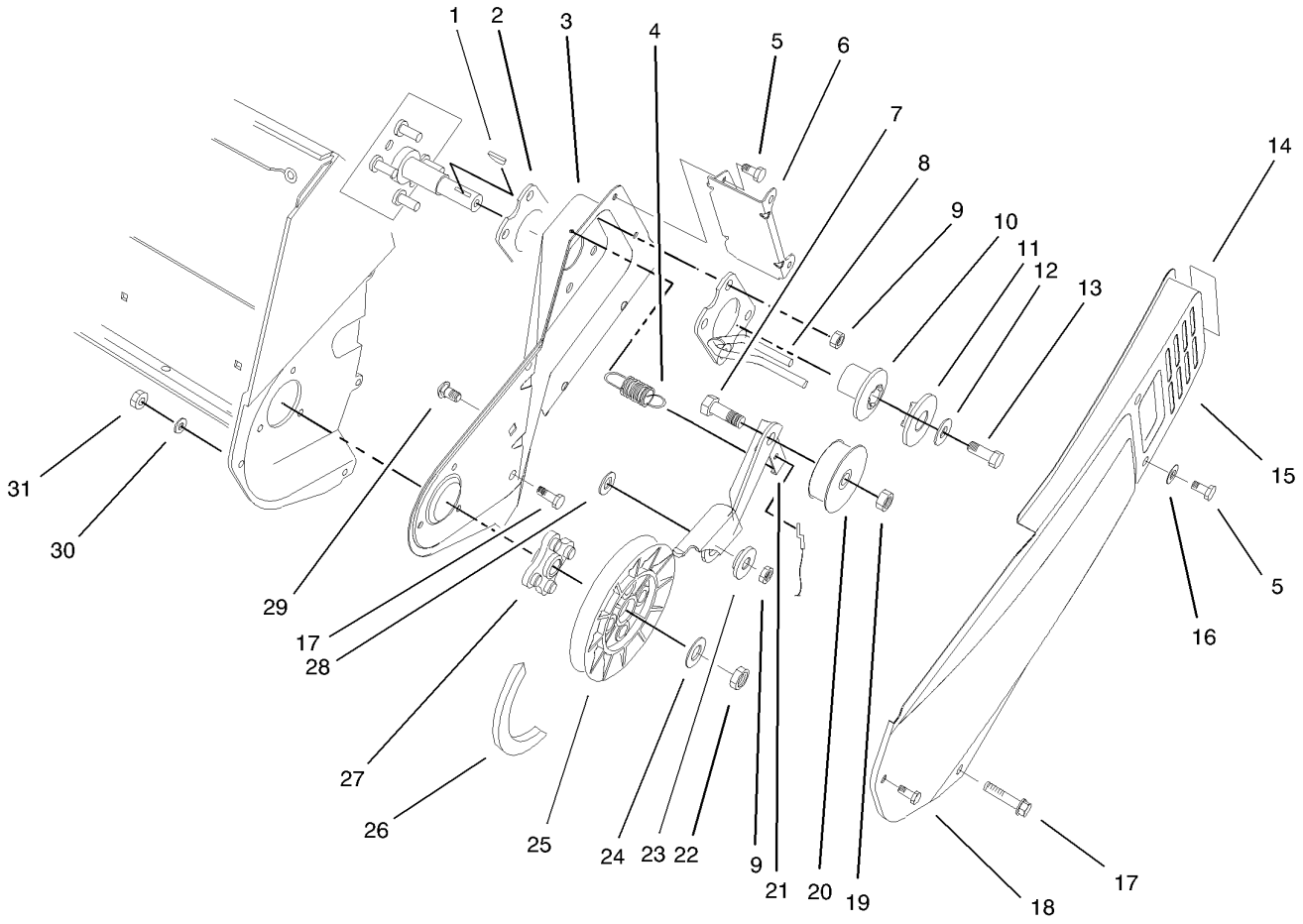

Impeller Drive Assembly

Ref	Part No.	Qty.	Description
1	3257-3	1	Key-Woodruff
2	71-5290-03	1	Plate-Engine
3	95-7945-03	1	Sideplate-LH
4	71-5470	1	Spring-Brake
5	32144-4	4	Screw-HWH
6	75-8870-03	1	Bracket-Cover, Belt
7	323-44	1	Screw-HH
8	94-9946-03	1	Guide-Belt
9	3296-29	5	Nut-Lock, NI
10	71-5050	1	Hub-Half Sheave
11	71-5060	1	Cap-Half Sheave
12	3256-71	1	Washer-Flat
13	3235-6	1	Screw-HH
14	94-2561	1	Decal-Hot
15	95-7946-03	1	Cover-Belt
16	3256-1	2	Washer-Flat
17	46-8094	3	Screw-Plastite
18	32105-23	1	Screw
19	3296-59	1	Nut-Lock, NI
20	71-5260	1	Pulley-Idler
21	94-9947	1	Arm-Brake
22	3296-38	1	Nut-Lock NI
23	94-9948	1	Bushing-Idler
24	3256-25	1	Washer-Flat

Ref	Part No.	Qty.	Description
25	75-8750	1	Pulley-Driven
26	99-1790	1	V Belt
27	75-8740	1	Hub
28	25-5640	1	Washer
29	3230-23	1	Screw-CARR
30	3256-14	1	Washer-Flat
31	3296-2	1	Nut-Lock

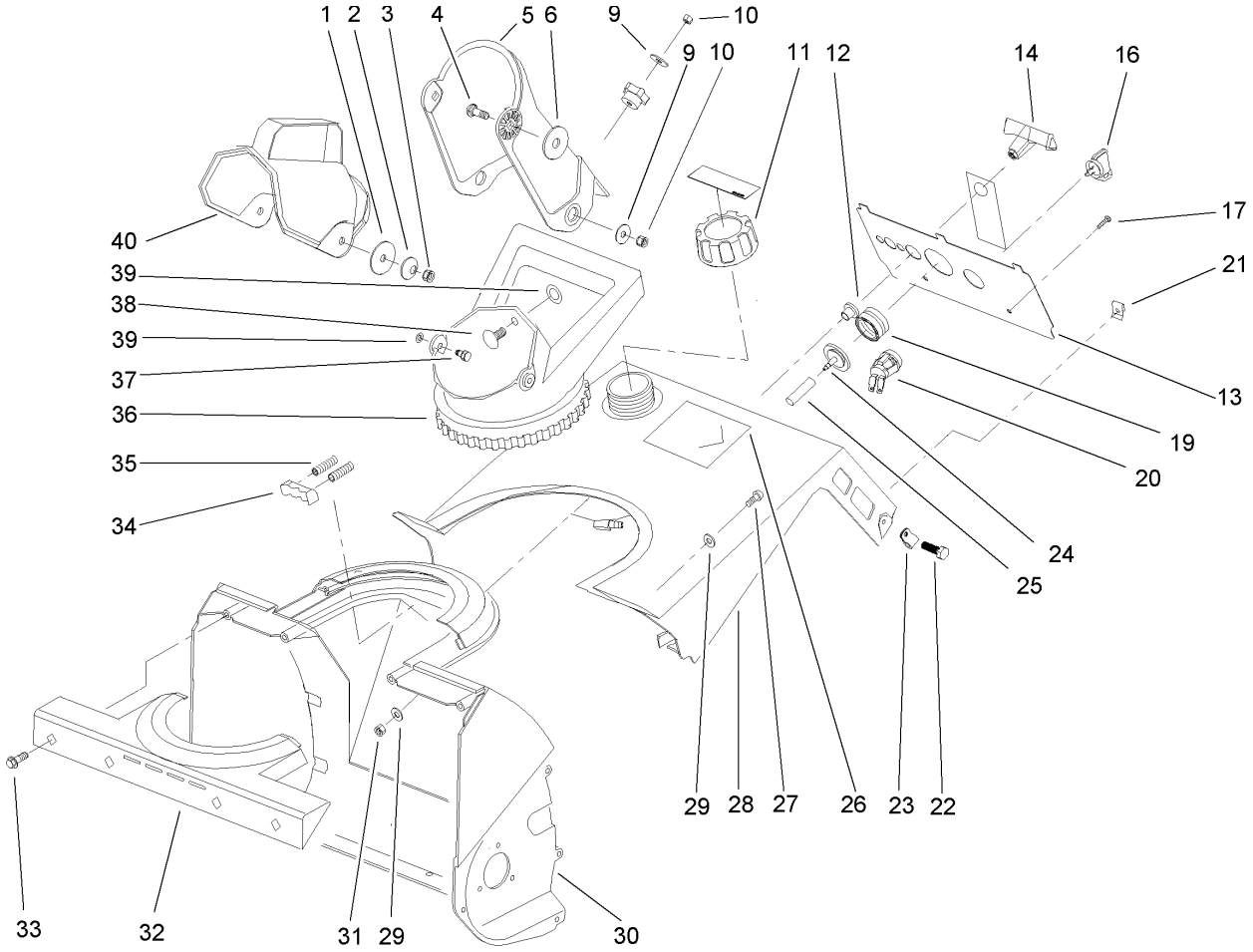

Housing, Upper Shroud, and Chute Assembly

Ref	Part No.	Qty.	Description
1	3256-68	2	Washer-Flat
2	3290-340	2	Washer-Belleville
3	3296-29	2	Nut-Lock, NI
4	3230-2	2	Bolt-CARR
5	75-8762	1	Chute
6	95-1905	2	Washer-Rubber
9	3256-81	3	Washer-Flat
10	3296-56	3	Nut-Lock, NI
11	104-4133	1	Gas Cap ASM
12	23-7470	1	Guide-Starter Rope
13	104-4941	1	Panel-Control
14	92-4853	1	Handle-Starter
16	63-8360	1	Key-Ignition
17	32144-53	2	Screw-SHWH
19	66-7460	1	Bulb-Primer
20	40-5940	1	Switch-On/off
21	49-1490	2	Nut
22	32144-89	2	Screw-Forming, Thread
23	98-2256	1	Clamp
24	44-2750	1	Body-Primer
25	44-3173	1	Hose-Primer
26	106-4724	1	Decal-Electric Start
27	3250-32	2	Screw-PPH
28	105-2994	1	Shroud-Tank, Gas Upper

Ref	Part No.	Qty.	Description
29	3256-1	4	Washer-Flat
30	75-8660	1	Housing
31	3296-42	2	Nut-Lock, NI
32	75-8650	1	Retainer-Chute
33	46-8094	4	Screw-Plastite
34	75-9160	1	Detent-Chute
35	75-9170	2	Spring-Compression
36	75-8670	1	Handle-Chute
37	321-3	2	Screw-HH
38	3229-11	1	Screw-CARR
39	32115-15	3	Pushnut-Retainer, Bolt
40	75-8770	1	Deflector-Chute

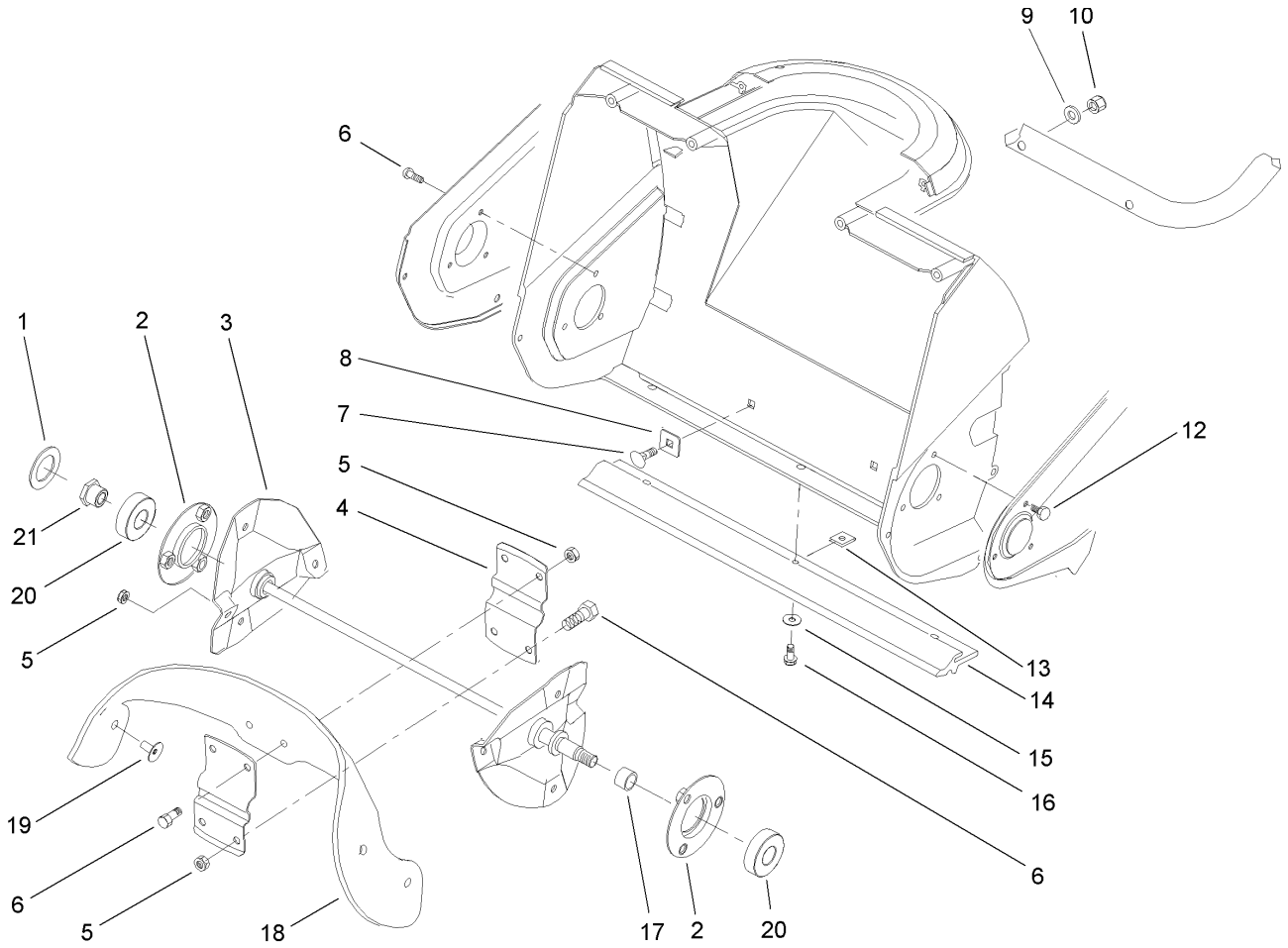

Impeller Assembly

Ref	Part No.	Qty.	Description
1	75-9180	1	Washer-Rubber
2	75-9080-03	2	Flange Bearing ASM
3	75-8840-03	1	Rotor Shaft ASM
4	75-8880-03	2	Support-Rotor
5	3296-56	12	Nut-Lock, NI
6	3234-33	7	Screw-HHF
7	3229-5	2	Screw-CARR
8	75-9040	2	Washer-Square
9	3-7501	2	Washer
10	3296-42	2	Nut-Lock, NI
12	321-3	3	Screw-HH
13	32115-19	3	Nut-Speed, U Type
14	75-8780	1	Scraper
15	3256-14	3	Washer-Flat
16	32144-34	3	Screw-Forming, Thread
17	75-8710	1	Spacer
18	84-1980	2	Blade-Rotor
19	84-1970	8	Screw
20	100-1048	2	Bearing-Ball
21	75-8690	1	Nut

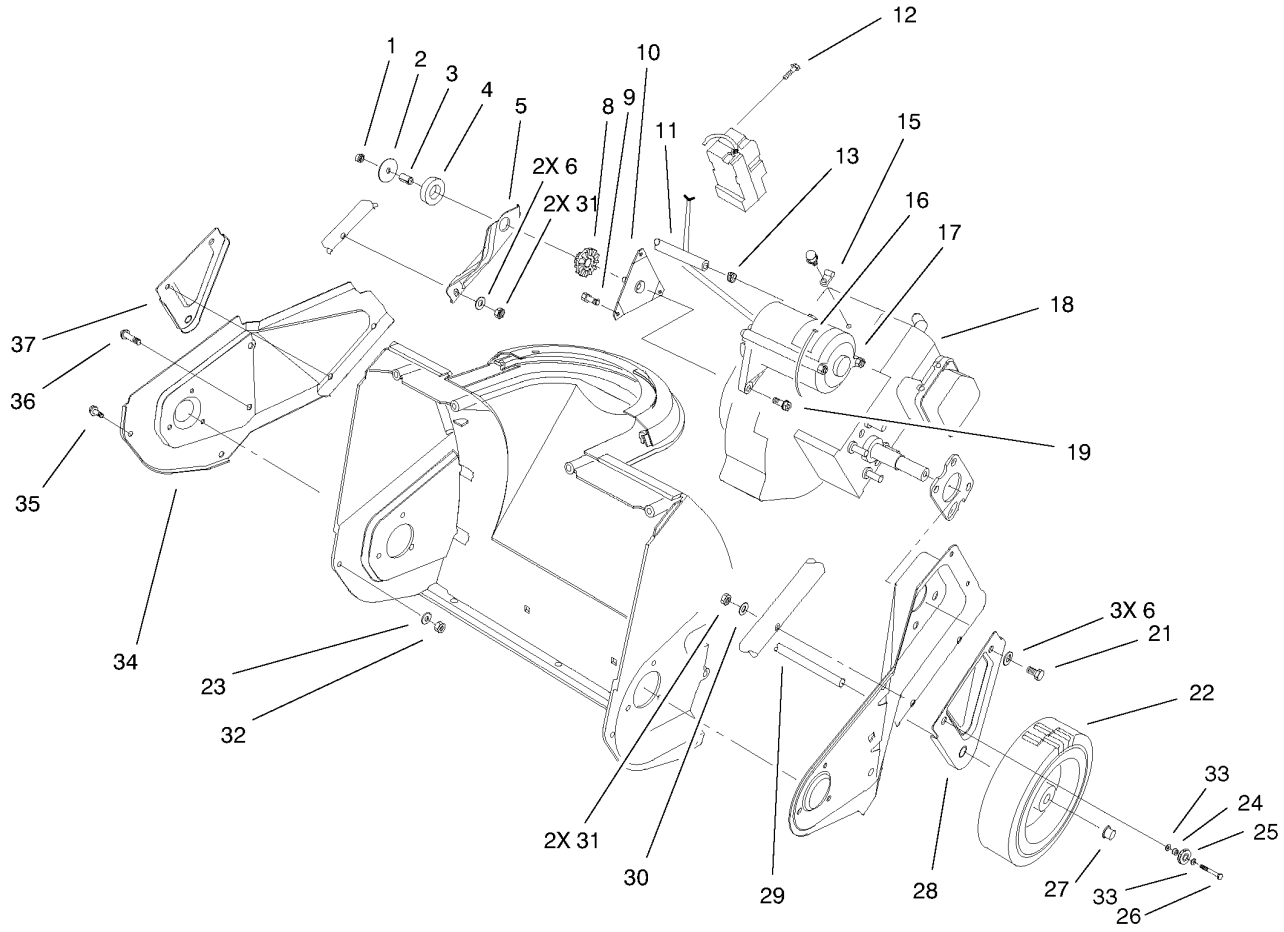

Engine, Side Plate and Wheel Assembly

Ref	Part No.	Qty.	Description
1	3296-56	1	Nut-Lock, NI
2	3256-58	1	Washer-Flat
3	80-0650	1	Spacer-Tubular
4	95-1903	1	Ring-Isolator
5	75-8980-03	1	Bracket-Support, Engine
6	3256-1	5	Washer-Flat
8	75-9100	1	Bushing-Isolator
9	94-2789	3	Screw
10	92-6012	1	Bracket/stud ASM
11	49-2483	1	Line-Gas
12	32144-27	3	Screw-Plastite
13	2412-98	2	Clamp
15	2412-91	1	Clamp
16	250-7	1	Tie-Cable
17	105-2957	1	Starter ASM (230 Volt)
❷18		1	Engine-Tecumseh, Hsk635-1723c
19	80-0700	2	Screw
21	321-10	3	Screw-HH
22	23-3250	2	Wheel
23	3256-14	1	Washer-Flat
24	55-9370	1	Spacer-Blade, Rotor
25	95-7949	1	Cable-Pulley
26	321-11	1	Screw-HH
27	3290-320	2	Retainer-Push On

Ref	Part No.	Qty.	Description
28	75-8910-03	1	Bracket-Wheel, LH
29	27-0062	1	Axle
30	3-7501	2	Washer
31	3296-42	4	Nut-Lock, NI
32	3296-2	1	Nut-Lock
33	3256-1	2	Washer-Flat
34	75-8820-03	1	Plate-Side, RH
35	32105-23	1	Screw
36	46-8094	3	Screw-Plastite
37	75-8900-03	1	Bracket-Wheel, RH

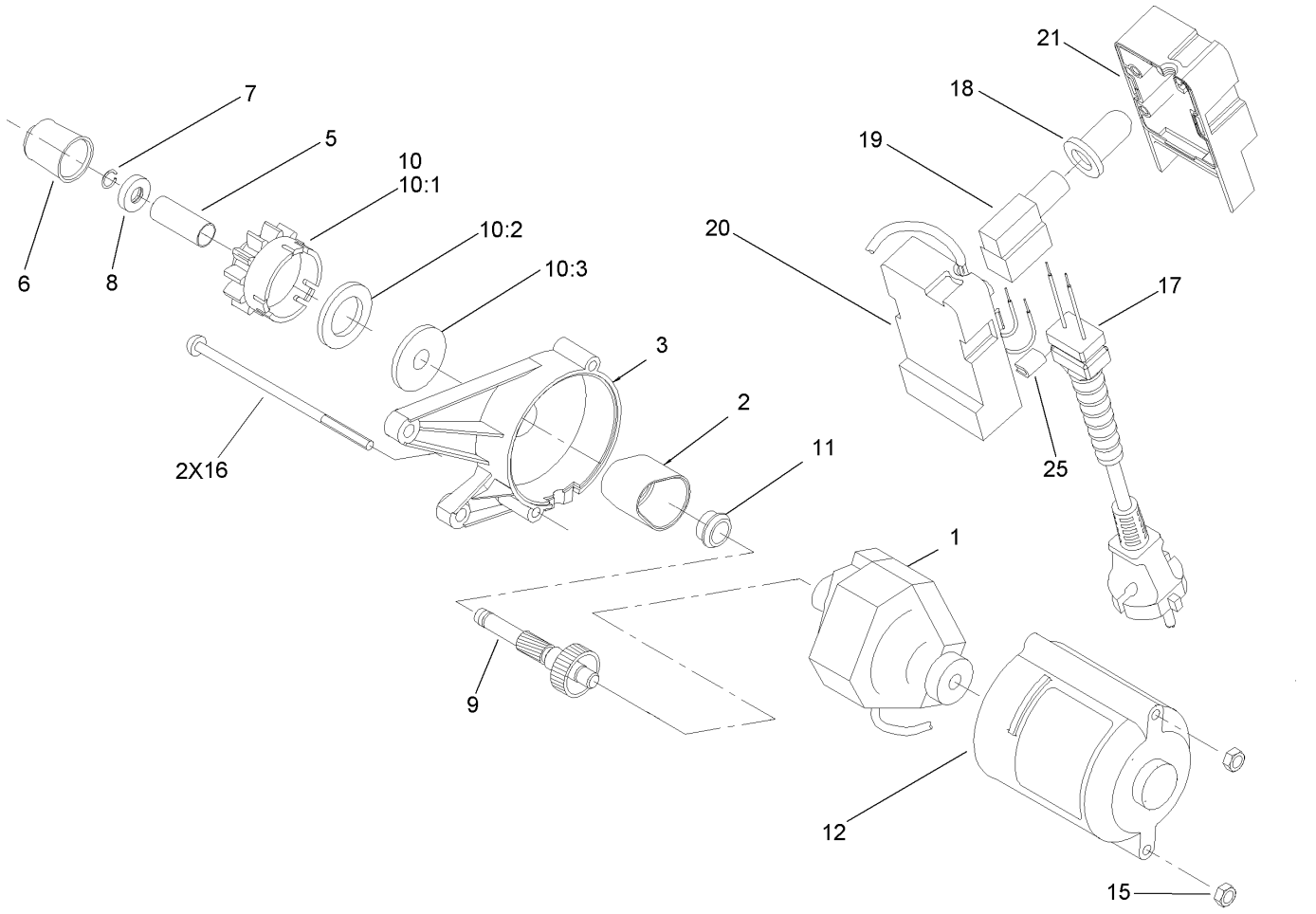

230 Volt Starter Assembly No. 105-2957

Ref	Part No.	Qty.	Description
1	99-1917	1	Motor-Starter
2	70-7850	1	Cover-Gear
3	100-3443	1	Housing-Upper Starter
5	61-4690	1	Spring
6	70-7890	1	Cap-Pinion
7	61-4680	1	Ring-Lock
8	100-2902	1	Stop-Pinion
9	105-8831	1	Shaft And Gear ASM
10	84-5240	1	Pinion ASM
10:1	70-7790	1	Nut
10:2	84-5230	1	Pinion
10:3	84-5440	1	Ring-Rubber
11	70-7900	1	Bushing
12	100-3444	1	Housing-Lower Starter
15	3296-2	2	Nut-Lock
16	32144-101	2	Screw
17	100-3556	1	Plug-Power 230 Volt
18	36-8350	1	Boot-Switch
19	36-8340	1	Switch-Starter
20	100-3441	1	Switch-Base Housing
21	100-3442	1	Switch-Cap Housing
25	99-6088	1	Spacer-Plug

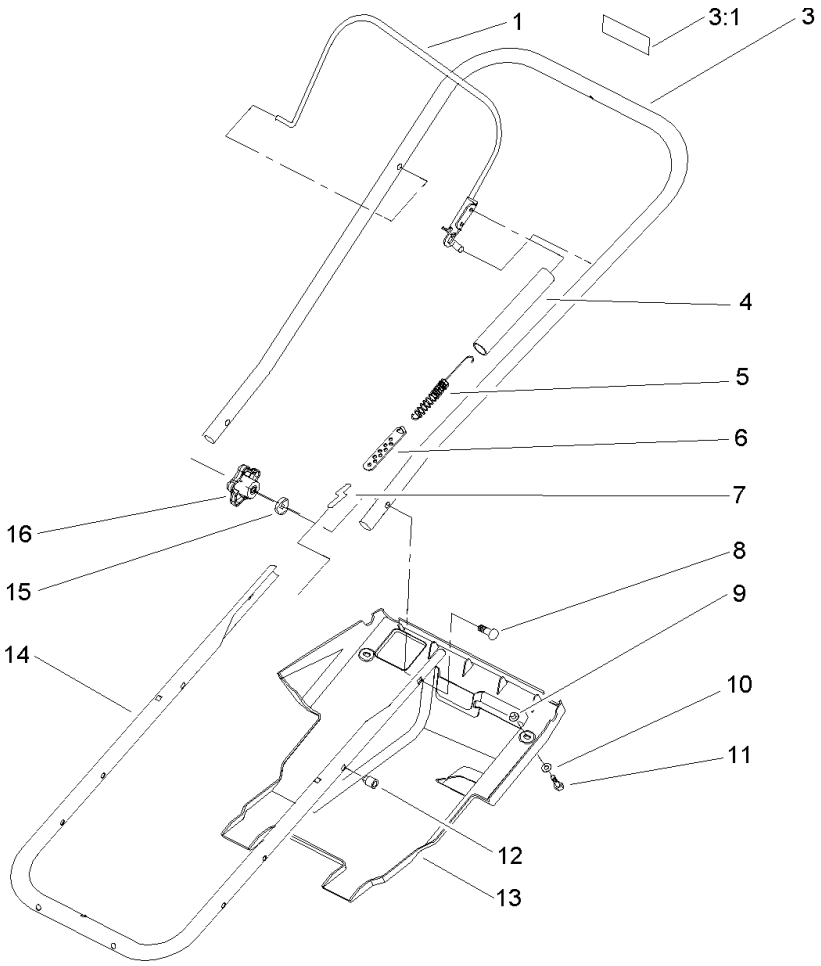

Handle and Lower Shroud Assembly

Ref	Part No.	Qty.	Description
1	95-7943-03	1	Bail ASM
3	100-5453	1	Upper Handle ASM
3:1	94-2577	1	Decal-Rotor Drive
4	71-5530	1	Cover-Spring
5	71-5480	1	Spring-Clutch
6	71-5330	1	Adjuster-Clutch Cable
7	94-9949	1	Cable-Clutch
8	92-2260	2	Screw-Handle
9	605120	2	Nut-Clip
10	3256-14	2	Washer-Flat
11	32144-34	2	Screw-Forming, Thread
12	32115-17	2	Nut-Expansion
13	75-8790	1	Shroud
14	75-9060-03	1	Tube-Frame
15	75-9130	2	Washer-Curved
16	106-4161	2	Knob-Handle

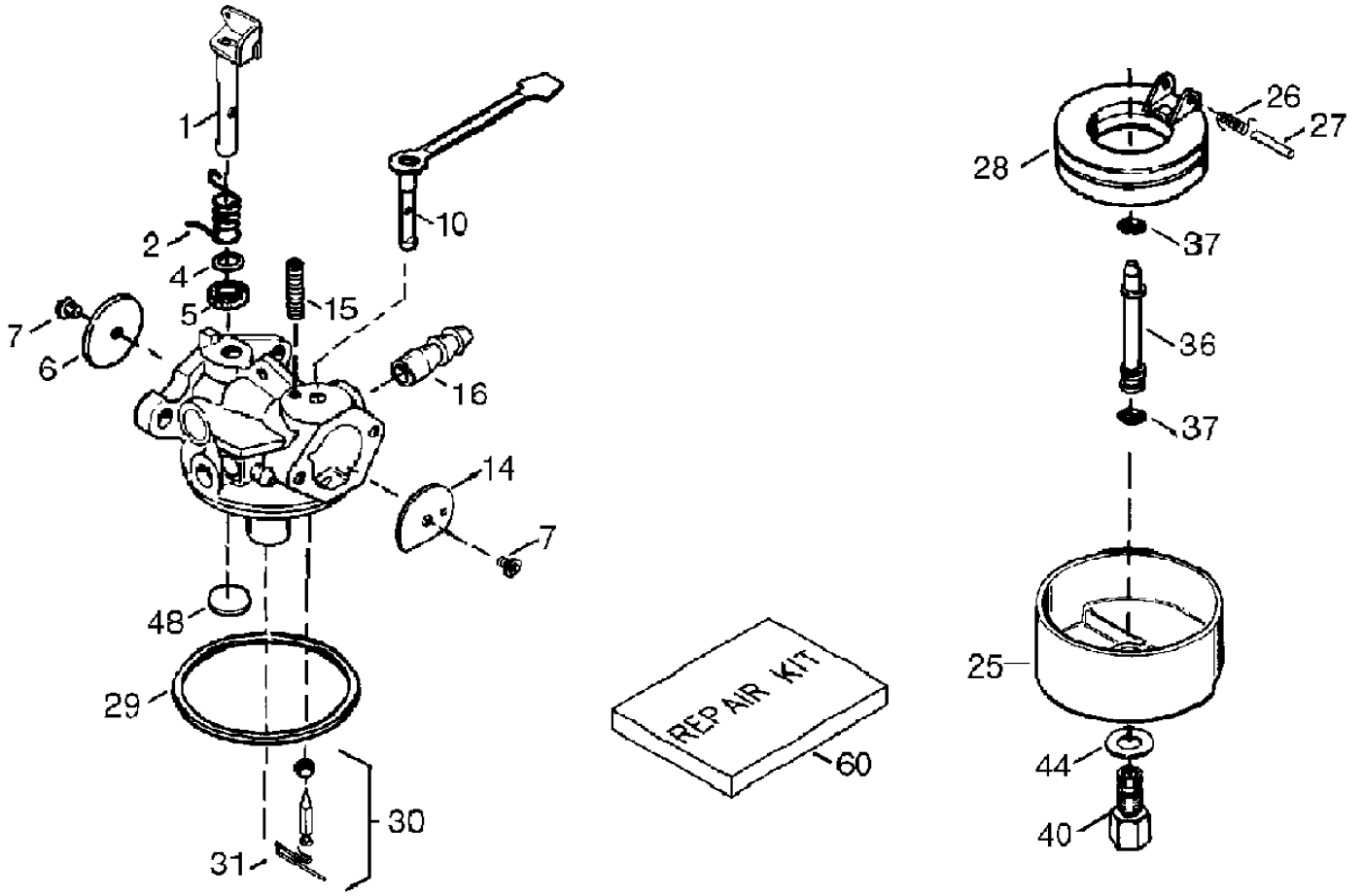

Carburetor Assembly No. 640086
Tecumseh Hsk635 Type 1723c

Ref	Part No.	Qty.	Description
0	640086A	1	Carburetor (Incl. 184 Of Engine Parts List)
1	632166A	1	Throttle Shaft And Lever Assembly
2	632169	1	Spring-Trottle, Return
4	631184	1	Washer-Dust Seal
5	631183	1	Seal-Dust, Throttle
6	631616	1	Throttle-Shutter
7	650506	2	Shutter-Screw
10	632553	1	Choke Shaft And Lever Assembly
14	31837	1	Shutter-Choke
15	630735	1	Spring-Choke, Positioning
16	632164	1	Fitting-Fuel
25	631867	1	Float-Bowl
26	632386	1	Spring-Float, Dampening
27	631024	1	Float-Shaft
28	632019	1	Float
29	631028	1	O-Ring-Bowl, Float
30	631021	1	Inlet Needle, Seat & Clip (Incl. 31)
31	631022	1	Clip-Spring
36	640080	1	Tube-Nozzle, Main
37	632547	2	O-Ring-Main Nozzle Tube
40	640301	1	Nut-Bowl, High Speed
44	27110A	1	Washer-Nut, Bowl
48	631027	1	Welch Plug-Atmospheric Vent

Ref	Part No.	Qty.	Description
60	632760	1	Repair Kit

Engine Assembly
Tecumseh No. Hsk635 1723c

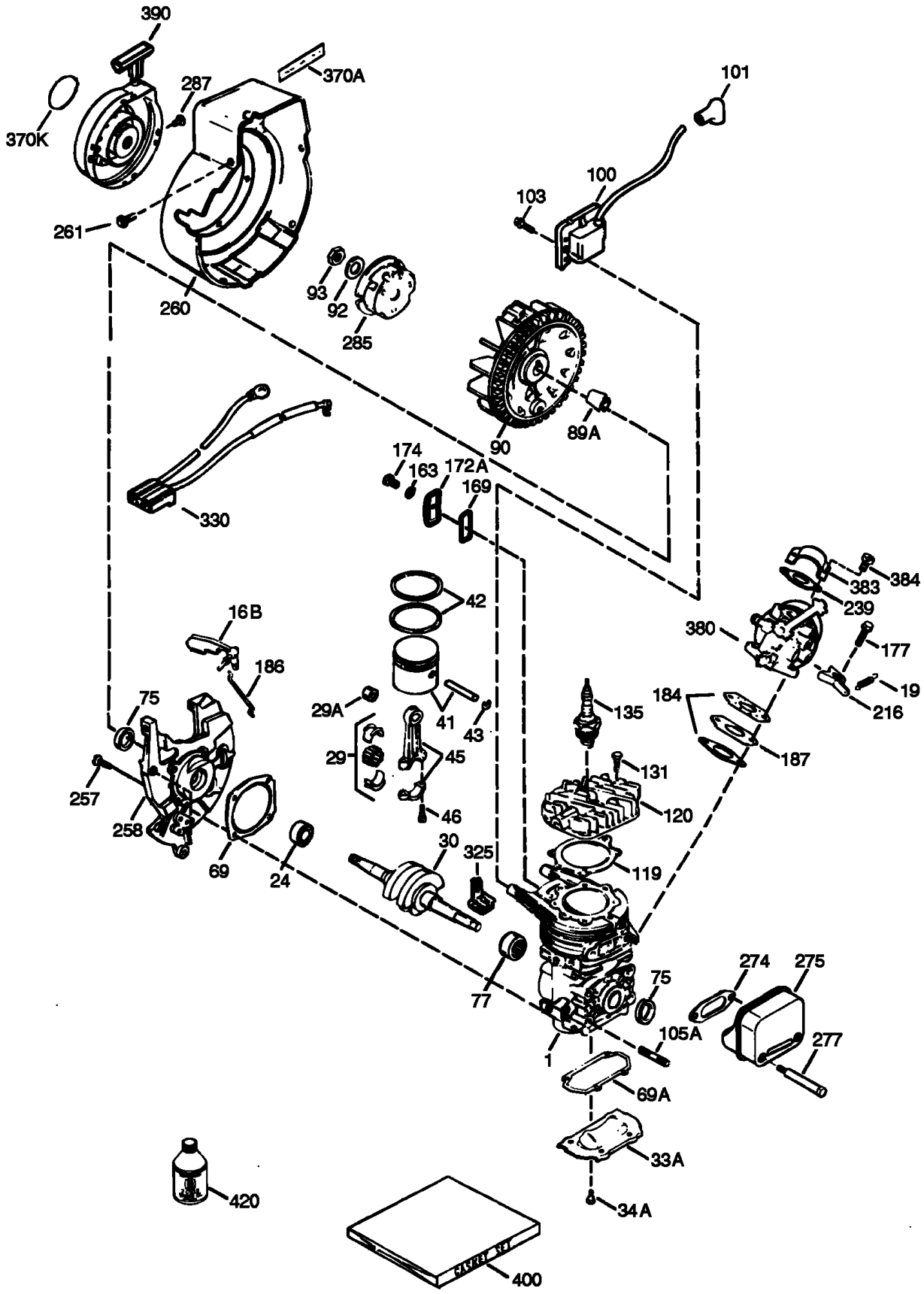

Engine Assembly
Tecumseh No. Hsk635 1723c

Ref	Part No.	Qty.	Description
1	0	1	Cylinder
16B	490291A	1	Vane-Air
19	570707	1	Spring-Extention
24	530110	1	Bearing-Ball
29	530150	1	Needle Bearing And Liner Set (37 Needles)
29A	530104A	1	Bearing-Cartridge
30	290602	1	Crankshaft
33A	570644	1	Plate-Cover
34A	650579	4	Screw, T-25, 10-24 X 1/2”
41	310283A	1	Piston & Pin Ass’y. (Incl. 43)
42	310289	2	Ring Set
43	310167	2	Ring-Retaning
45	310235B	1	Connecting Rod Ass’y. (Incl. 29, 29a, & 46)
46	650633	2	Bolt-Rod, Connecting
69	510292A	1	Gasket-Cover, Cylinder
69A	510323A	1	Gasket-Plate, Cover
75	510319	2	Seal-Oil
77	530105	1	Bearing-Cartridge
89A	611032	1	Sleve-Adapter
90	611066	1	Flywheel
92	650815	1	Washer-Belleville
93	650390	1	Nut-Flywheel
100	34443B	1	Solid State Ignition (Incl. 101)
101	610118	1	Cover-Spark Plug
103	651007	2	Screw, T-15, 10-24 X 15/16”
105A	650796	4	Stud
119	510274A	1	Gasket-Cylinder Head
120	250240B	1	Head-Cylinder
131	650477	5	Screw, T-30, 1/4-20 X 3/4”
135	611049	1	Plug-Spark, Resister (Rcj8y)
163	650838	1	Washer
169	510325A	1	Cover, Compression Release
172A	570708	1	Cover-Compression Release
174	650579	1	Screw, T-25, 10-24 X 1/2”
177	650959	2	Screw, 5/32, 1/4-20 X 1”
184	510326A	2	Gasket-Carburetor
186	490322	1	Governor-Link
187	570438A	1	Spacer
216	570645	1	Lever-Adjusting, Rpm
239	35815	1	Gasket-Air Cleaner
257	650911	4	Screw, T-30, 1/4-20 X 5/8”
258	350422	1	Base-Housing,blower (Incl.75)
260	350437	1	Housing-Blower
261	650737	4	Screw, 1/4-20 X 1/2”
274	510207A	1	Gasket-Exhaust
275	390332	1	Muffler (Incl. 274 & 277)
277	650869	2	Screw, 1/4-20 X 2-3/4”

Ref	Part No.	Qty.	Description
285	590551A	1	Cup-Starter
287	650926	3	Screw, 8-32 X 21/64”
325	29443	1	Clip-Wire
330	611131A	1	Harness-Wire
370A	36261	1	Decal-Instruction
370K	36695	1	Decal-Starter
380	640086A	1	Carburetor (Incl. 184)
383	570434	1	Baffle-Carburetor
384	650431	2	Screw, T-25, 10-32 X 5/8”
390	590743	1	Rewind Starter Assembly
400	510324B	1	Gasket Set
420	730227B	1	2-Cycle Oil (8 Oz.)

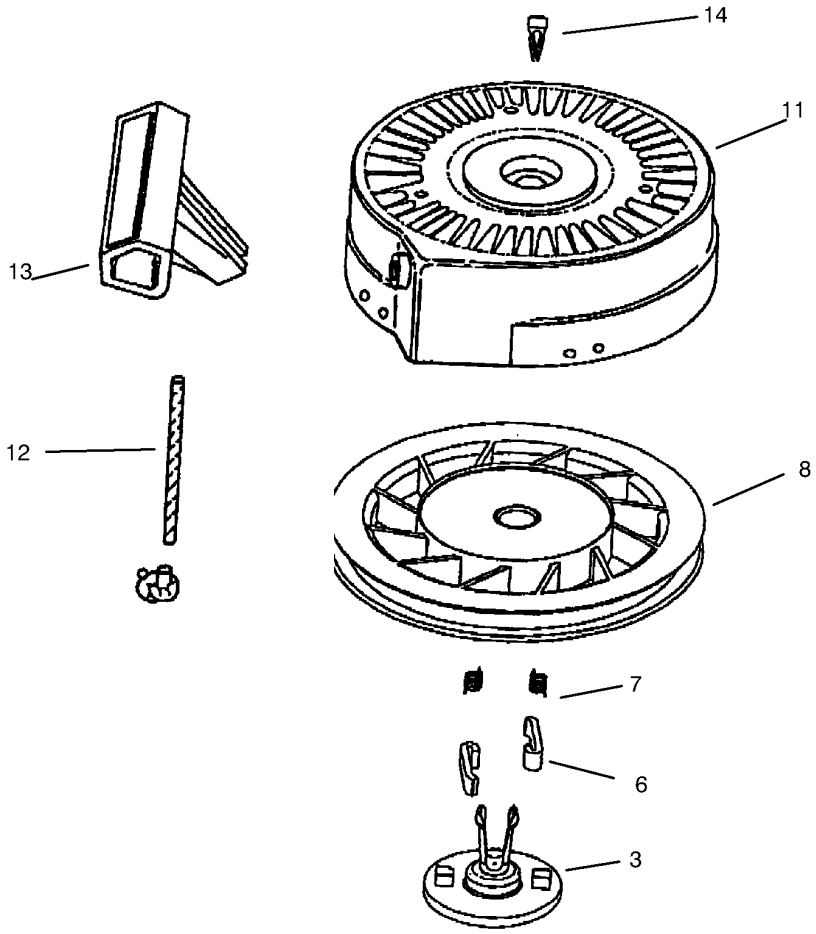

Recoil Starter Assembly No. 590743
Tecumseh Hsk635 Type 1723c

Ref	Part No.	Qty.	Description
❶0	590743	1	Rewind Starter Assembly
3	590740	1	Retainer
6	590616	2	Dog-Starter
7	590617	2	Spring-Dog
8	590645A	1	Pulley And Rewind Spring Assembly
11	590643A	1	Starter Housing Assembly
12	590535	1	Rope-Starter
13	590701	1	Handle-Starter
14	590760	1	Clip-Spring

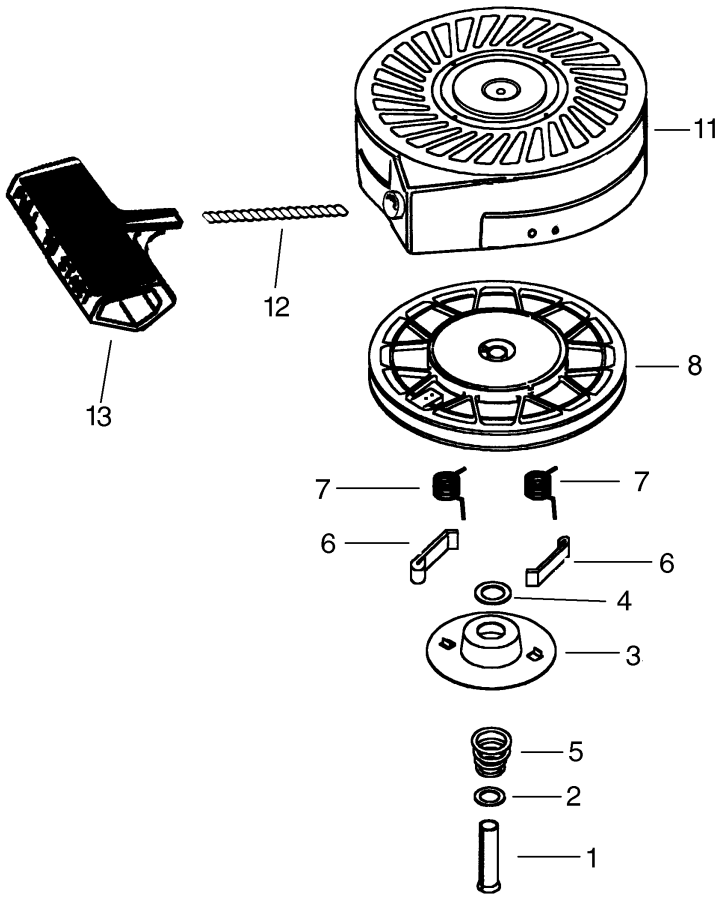

Recoil Starter Assembly No.590712

Ref	Part No.	Qty.	Description
0	590712	1	Rewind Starter Assembly (Optional)
1	590599A	1	Spring Pin (Incl. 4)
2	590600	1	Washer
3	590696	1	Retainer
4	590601	1	Washer
5	590697	1	Spring-Brake
6	590698	2	Dog-Starter
7	590699	2	Spring-Dog
8	590709	1	Pulley And Rewind Spring Assembly
11	590713	1	Starter Housing Assembly
12	590535	1	Rope-Starter
13	590701	1	Handle-Starter

NOTES

NOTES


TORO®