FORM NO. 3312-311

TORO®

MODEL NO. 16770-4000001 & UP

PARTS CATALOG

21″ S.P. SIDE DISCHARGE KEY-LECTRIC®

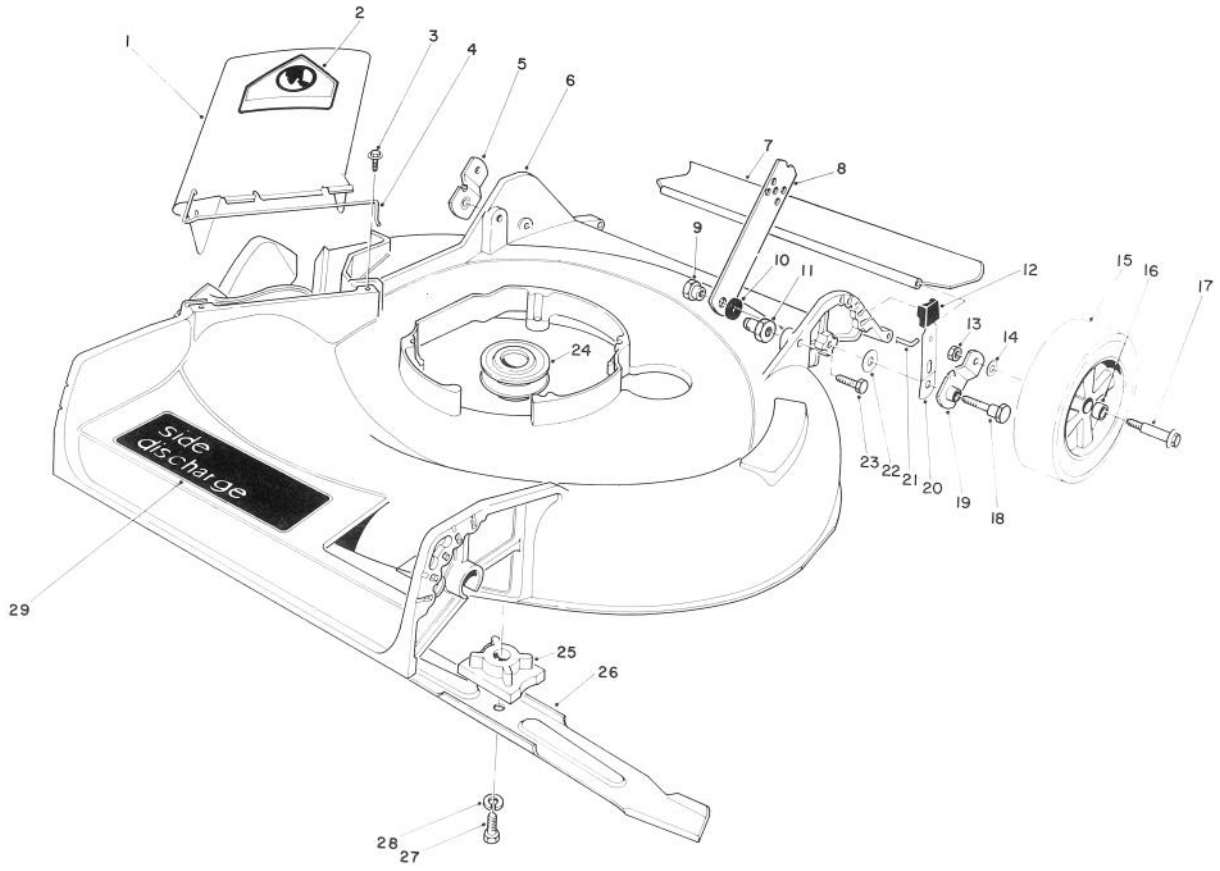

HOUSING ASSEMBLY

Ref. No.	Part No.	Description	No. Used
1	27-7817	Deflector Assembly (Incl. Ref. #2 & 4)	1
2	39-5770	Decal — Danger	1
3	46-6811	Screw with Washer	2
4	20-2640	Hinge — Spring	1
5	20-2130	Pivot Arm Assembly 'B'	1
6	11-4639	Housing — 21″	1
7	22-4950	Shield — Rear	1
8	27-7080	Latch — Handle	2
9	27-6520	Shoulder Nut	2
10	3-3287	Spacer — Handle Latch	2
11	12-2080	Shoulder Nut	2
12	25-7740	Knob — Spring Arm	2
13	3296-6	Locknut	2
14	40-1940	Washer — Wheel Bolt	2
15	11-6349	Wheel & Tire Assembly (Inc. Ref. #16)	2
16	27-6250	Bushing	4
17	27-6231	Wheel Bolt	2
18	28-8880	Pivot Screw	2
19	20-2140	Pivot Arm Assembly 'A'	1
20	25-8000	Spring Arm Assembly	2
21	33-3201	Rod — Rear Shield	1
22	5-4460	Washer — Pivot	2
23	322-6	Capscrew Hex Hd.	2
24	23-0130	Pulley — Driver	1
25	49-7890	Retainer Blade	1
26	20-2720	Blade — 21″	1
27	26-0671	Blade Screw	1
28	3253-22	Lockwasher	1
29	44-0440	Decal — Side Discharge	1
*	11-6489	Loose Parts	1

*Not Illustrated

©The Toro Company — 1983

PRICE $1.00

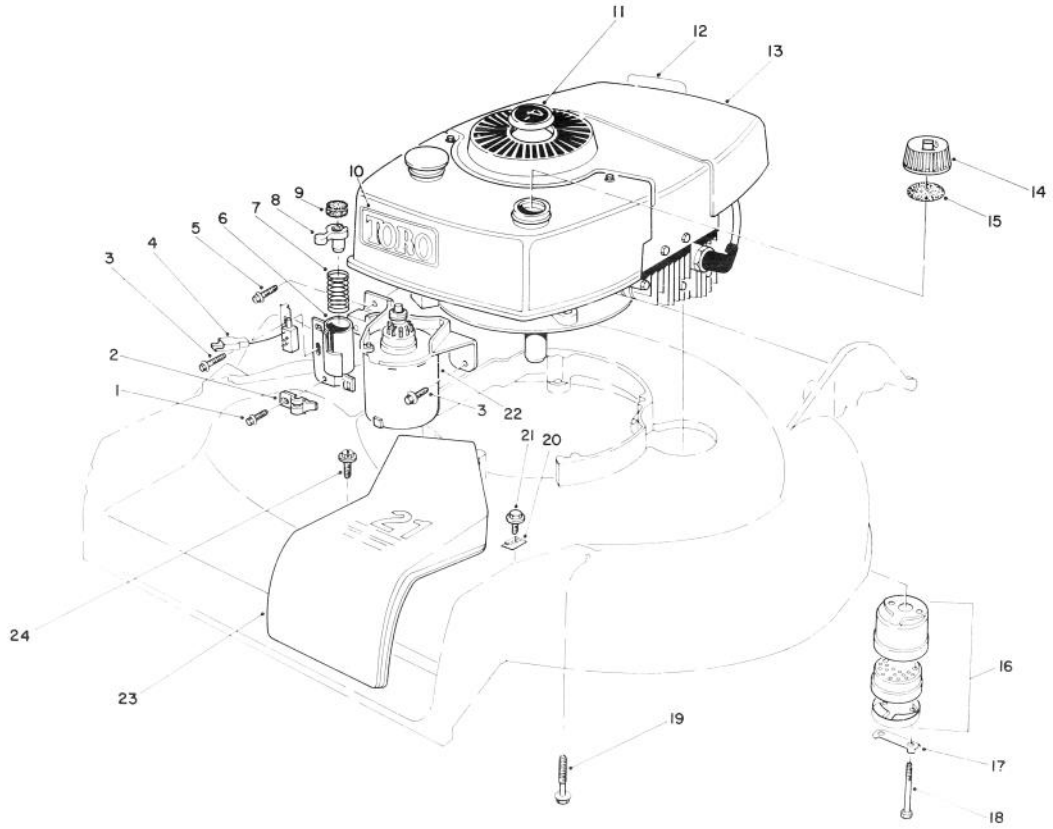

ENGINE ASSEMBLY

Ref. No.	Part No.	Description	No. Used
1	12-5450	Screw — Tapping	1
2	46-6530	Clamp — Cable	1
3	12-3270	Screw — Tapping	2
4	47-6530	Switch — Push Button	1
5	11-9760	Screw — Tapping	1
6	46-5840	Tube Assembly	1
7	47-2180	Spring — Compression	1
8	46-5820	Plunger	1
9	43-4670	Pad — Friction	1
10	44-0510	Decal — Toro	1
11	38-1480	Plug Button	1
12	37-1580	Decal — Maintenance	1
13	221-730	Engine	1
14	42-0682	Gas Cap Assembly (Incl. Ref. #15)	1

Ref. No.	Part No.	Description	No. Used
15	20-4620	Gasket	1
16	5-4769	Muffler Assembly (Incl. Ref. #17 & 18)	1
17	3-5094	Locking Clip	1
18	321-20	Capscrew	2
19	11-0580	Screw — Engine	3
20	46-5610	Clamp — Cable	1
21	32144-11	Screw — Thread Forming	1
22	49-4210	Starter Motor Assembly	1
23	46-4780	Belt Cover	1
24	12-5450	Screw	2
*	39-5930	Spark Arrestor Muffler (Optional) (Incl. Ref. #17 & 18)	1

*Not Illustrated

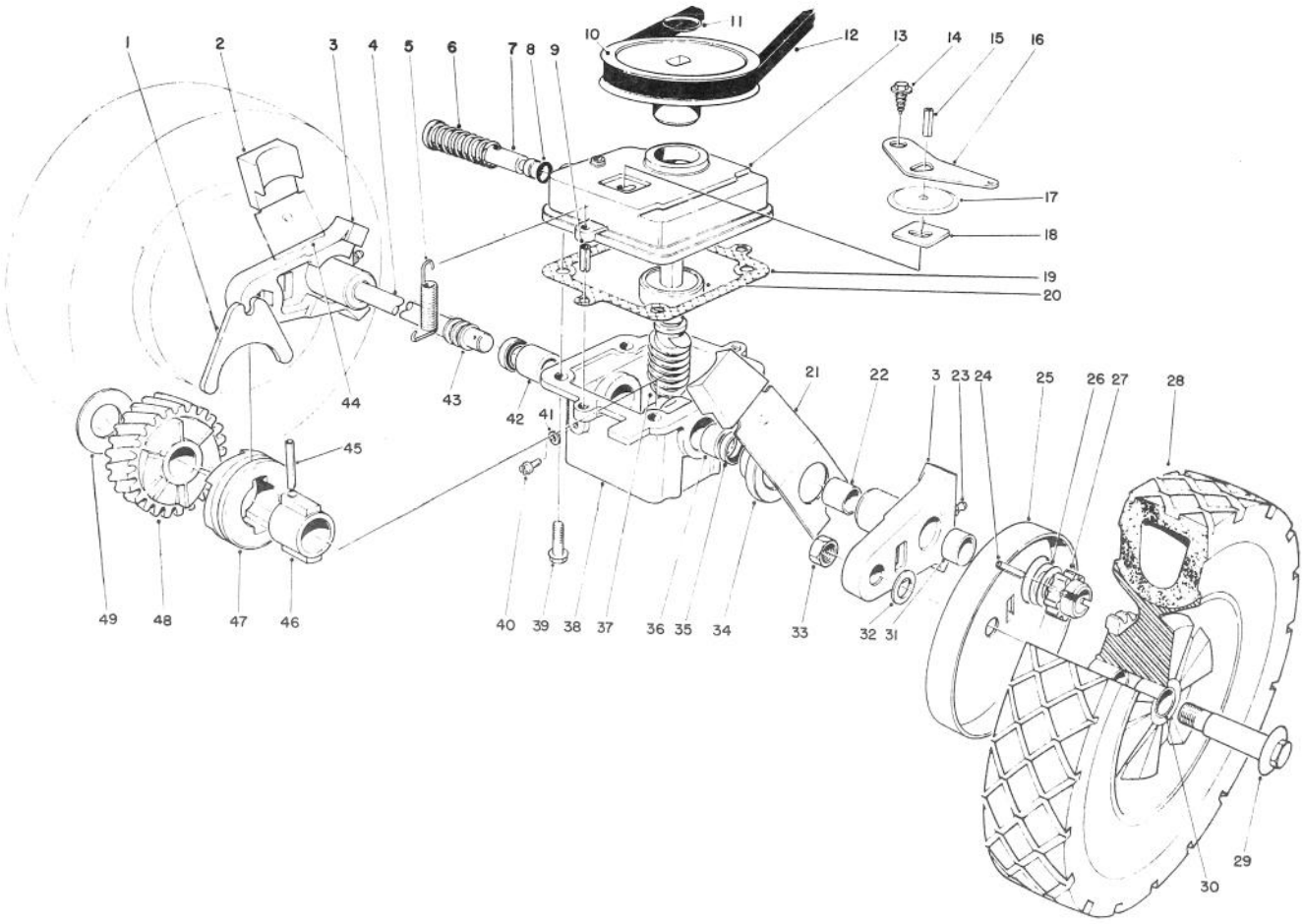

GEAR CASE ASSEMBLY

Ref. No.	Part No.	Description	No. Used
1	5-3247	Shifter Fork	1
2	25-7740	Knob Arm	2
3	38-2220	Pivot Arm (Incl. Ref. #22,23&31)	2
4	37-9440	Drive Shaft	1
5	17-4490	Spring — Belt Tension	1
6	3-0731	Spring	1
7	46-8240	Shifter Rod	1
8	237-137	"O" — Ring	1
9	32121-1	Roll Pin	2
10	18-9760	Pulley	1
11	3290-346	Push On Retainer	1
12	5-4505	V-Belt	1
13	39-1100	Gear Case Cover	1
14	32140-64	Screw — Self Tapping	1
15	32121-23	Roll Pin	1
16	5-3252	Shifter Arm	1
17	3-2615	Transmission Dust Cover	1
18	3-0681	Latch Plate	1
19	36-1000	Gasket — Gear Case	1
20	47-7250	Ball Bearing	1
21	25-7930	Spring Arm Assembly L.H.	1
22	256-206	Bushing	2
23	302-56	Grease Fitting	2
24	32121-98	Pin — Coil	2
25	18-9820	Wheel Cover	2
26	46-6510	Thrust Washer	4
27	46-5930	Pinion Gear	2

Ref. No.	Part No.	Description	No. Used
28	11-6359	Wheel, Tire & Gear Assembly (Incl. Ref. #30)	2
29	27-6231	Wheel Bolt	2
30	27-6250	Bushing — Wheel	4
31	256-1	Bushing	2
32	40-1940	Washer — Wheel Bolt	2
33	3296-6	Nut	2
34	42-3520	End Cap	2
35	47-6730	Oil Seal	2
36	47-2890	Bushing	1
37	8-5679	Worm Shaft & Gear (Incl. Ref. #48)	1
38	8-0479	Gear Case (Incl. Ref. # 35-36 & 42)	1
39	11-9760	Screw	4
40	28-1550	Screw Nylon	1
41	46-9640	Gasket	1
42	47-2900	Bushing	1
43	24-7920	Cover Drive Shaft	1
44	25-7920	Spring Arm Assembly R.H.	1
45	32121-88	Coil Pin	1
46	3-0721	Sleeve	1
47	19-5660	Clutch Jaw	1
48		Helical Gear	1
49	3-0724	Thrust Washer	1
*	11-4149	Gear Case Assembly Complete	1
*	27-0490	Bearing & Shaft Tool	1
*†	39-9640	Metric Bearing Tool	1

*Not Illustrated
†Use with 27-0490 Bearing & Shaft Tool

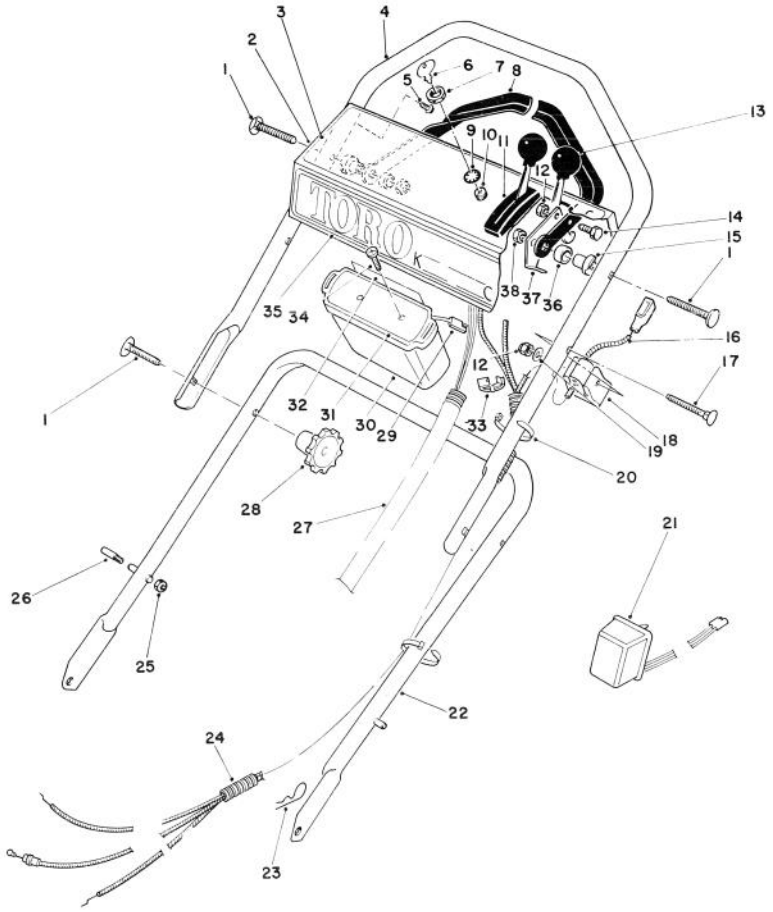

HANDLE ASSEMBLY

Ref. No.	Part No.	Description	No. Used
1	17-9421	Handle Screw	4
2	11-7029	Control Panel (Incl. Ref. #3)	1
3	46-7430	Decal — Instruction	1
4	46-5411	Upper Handle	1
5	32104-76	Screw — Tapping	5
6	218-412	Keys (Set of 2)	1
7	218-461	Nut	1
8	46-5560	Control Bar	1
9	3254-5	Lockwasher	1
10	46-5780	Switch — Starter (Incl. Ref. #6, 7 & 9)	1
11	46-6040	Control — Traction Bend Type 3 Sheath Lg. 53" (134.6cm) Wire Lg. 2-3/16" (5.5cm)	1
12	3296-42	Locknut	2
13	46-6010	Control — Throttle Bend Type 1 Sheath Lg. 36-1/2" (92.7cm) Wire Lg. 2" (5cm)	1
14	321-3	Capscrew	1
15	49-1630	Support Spacer	2
16	43-4531	Brake Cable	1
17	46-6432	Handle Screw	1

Ref. No.	Part No.	Description	No. Used
18	46-6980	Support — Cable	1
19	3256-22	Washer	1
20	3290-378	Cable Tie	3
21	6-9780	Battery Charger	1
22	49-1690	Lower Handle Assembly	1
23	3290-255	Hairpin Cotter	2
24	46-6441	Cover — Control Cable	1
†25	3296-47	Locknut	2
†26	49-2750	Handle Pin	2
27	46-5810	Wire Harness Assembly	1
28	19-4050	Knob — Handle	2
29	48-2070	Lead Wire Assembly	1
30	39-0640	Case — Battery	1
31	39-0630	Cover — Battery	1
32	36-5380	Decal	1
33	2412-50	Clip	4
34	32104-129	Screw — Self Tapping	2
35	46-8460	Decal — Toro Key-Lectric	1
36	256-276	Spacer — Nylon	2
37	46-7950	Lever — Control	1
38	3296-58	Locknut	2
*	38-4180	Battery Pack Assembly (Incl. Ref. #29-32 & 34)	1

†Service Replacement Parts
*Not Illustrated

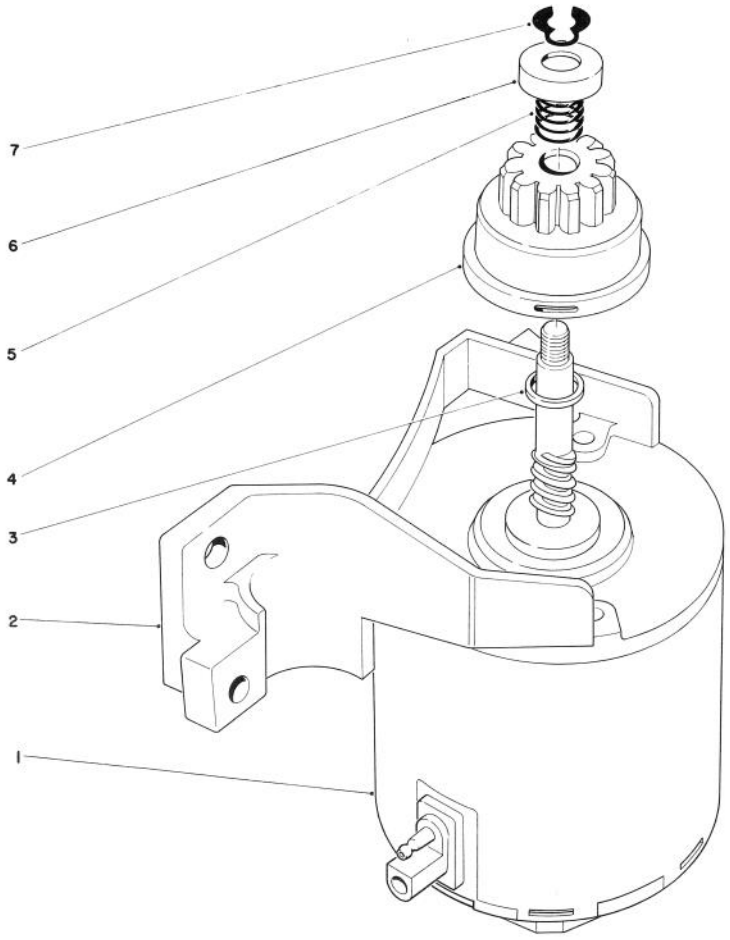

STARTER ASSEMBLY

Ref. No.	Part No.	Description	No. Used
1	218-543	End Frame w/Brushes & Electrical Terminal	1
2	218-541	End Frame w/Bushing	1
3	23-9591	Spacer	1
4	43-4370	Pinion Assembly	1
5	44-0500	Spring — Compression	1
6	49-2170	Pinion Stop	1
7	32151-47	Ring — Retaining Ext.	1
*	49-4210	Starter Assy. (Incl. Ref. #1-7)	1

*Not Illustrated

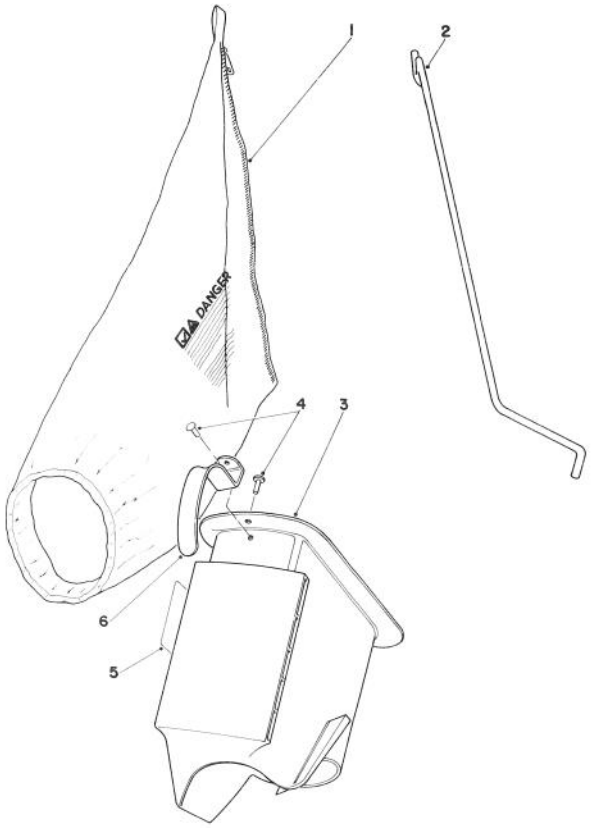

BAGGING KIT NO. 47-6510 (OPTIONAL)

Ref. No.	Part No.	Description	No. Used
1	6-0929	Grass Bag	1
2	47-5830	Bag Rod	1
3	6-1089	Grass Chute (Incl. Ref. #4&6)	1

Ref. No.	Part No.	Description	No. Used
4	3295-26	Rivet	2
5	36-5230	Decal — Bag Chute	1
6	20-4650	Handle Chute	1

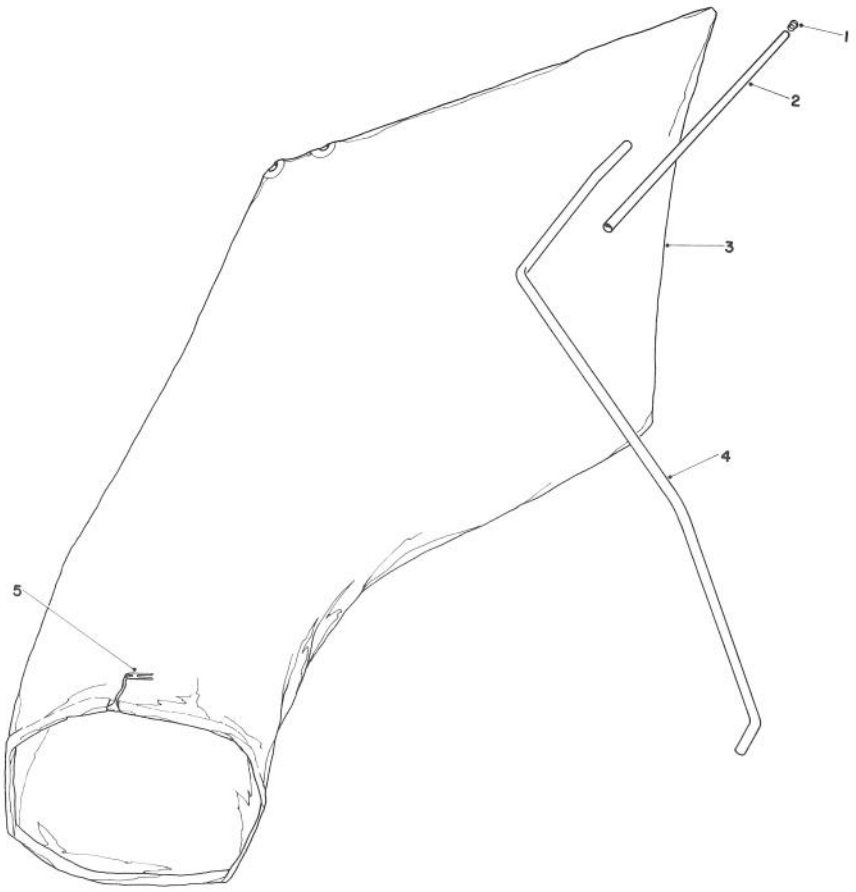

GIANT BAGGING KIT NO. 29-9750 (OPTIONAL)

Ref. No.	Part No.	Description	No. Used
1	2410-29	Cap	1
2	29-7000	Tube 25"	1
3	8-4719	Bag (Incl. Ref. #5)	1

Ref. No.	Part No.	Description	No. Used
4	22-4820	Hanger Rod	1
5	3-2781	Bag Cord Fasteners	1

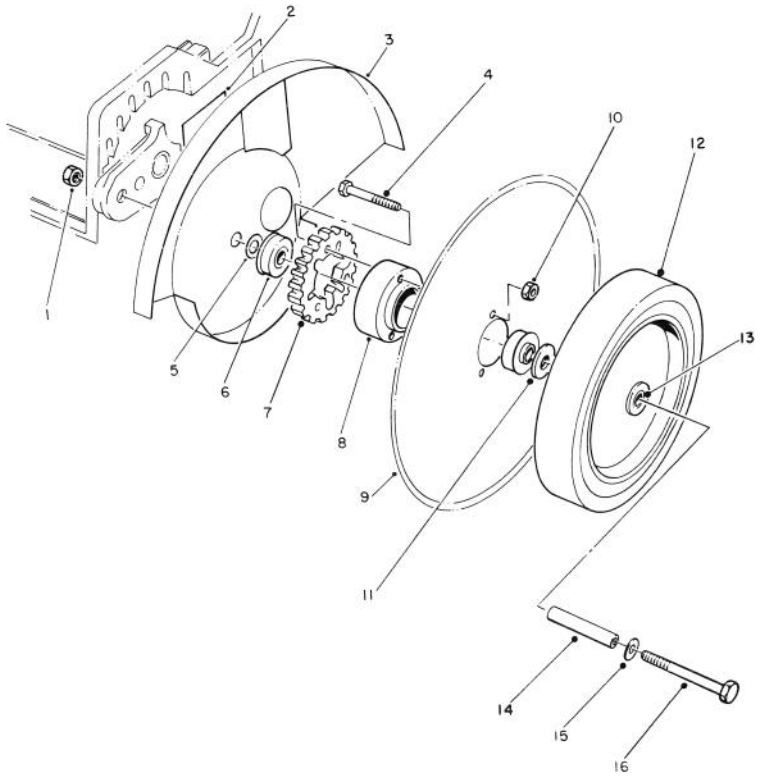

EDGER KIT NO. 59125 (OPTIONAL)

Ref. No.	Part No.	Description	No. Used
1	32146-6	Locknut	1
2	47-2210	Decal — Toro Edger	1
3	47-6150	Shield	1
4	3290-360	Hex Hd. Machine Screw	3
5	40-1940	Washer — Wheel Bolt	1
6	251-180	Bearing	2
7	49-2130	Gear — Wheel	1
8	47-6190	Spacer — Hub	1
9	47-6200	Blade — Edger 80 Tooth	1

Ref. No.	Part No.	Description	No. Used
10	32153-1	Locknut	3
11	29-8870	Spacer	1
12	34-0380	Wheel Assy. (Incl. Ref. #13)	1
13	27-6250	Bushing	1
14	47-6210	Spacer — Wheel Bolt	1
15	3256-3	Washer	1
16	3211-17	Capscrew	1
*	47-6180	Blade & Hub Assy. (Incl. Ref. #4, 6-10)	1

*Not Illustrated

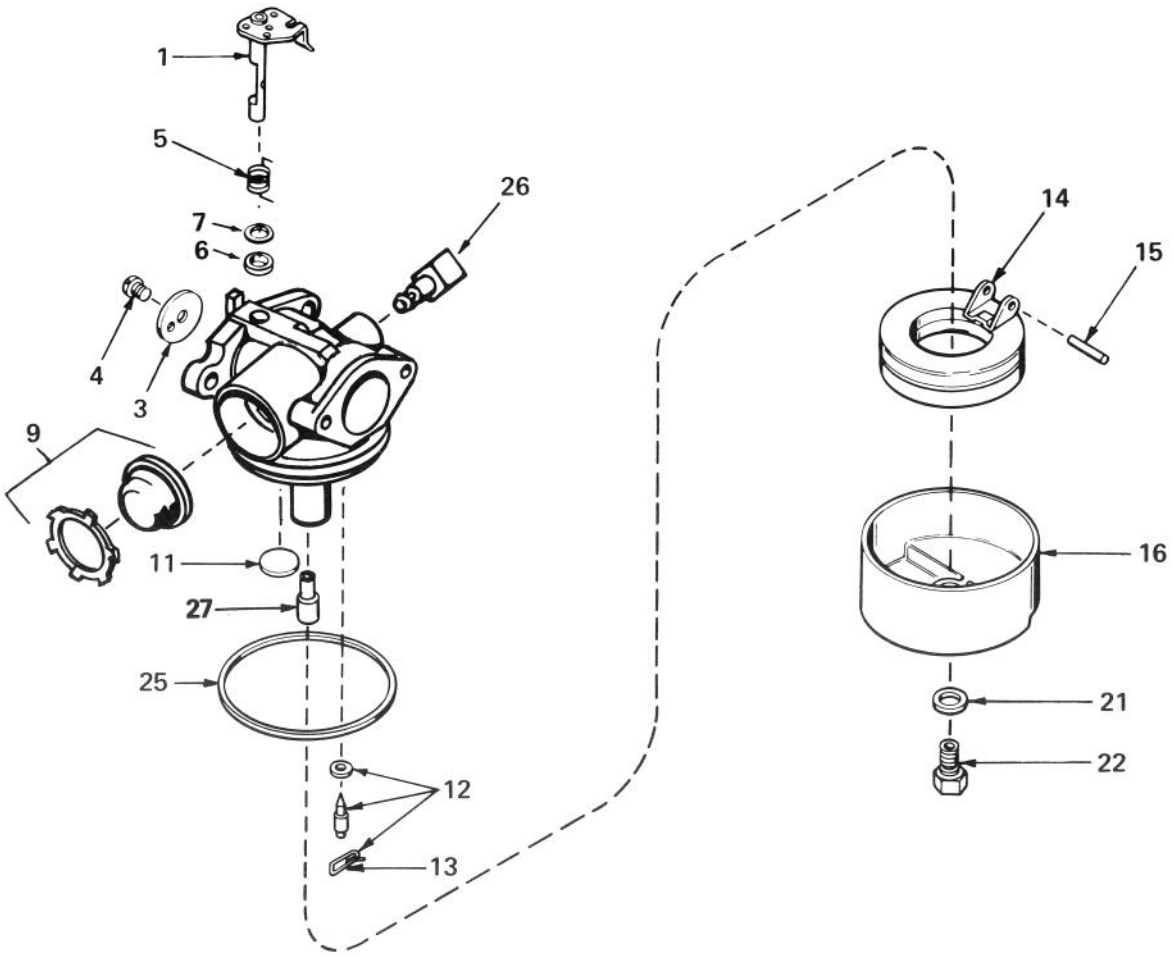

CARBURETOR NO. 632050A

Ref. No.	Part No.	Description	No. Used
1	631615	Shaft & Lever Assy., Throttle	1
3	631616	Shutter, Throttle	1
4	650506	Screw, Throttle Shutter	1
5	631767	Spring, Return	1
6	631971	Seal, Dust	1
7	631184	Washer, Flat	1
9	632047	Bulb & Retainer, Primer	1
11	631027	Plug, Welch	1
12	631021	Inlet Needle, Seat & Clip Assy. (Incl. # 13)	1

Ref. No.	Part No.	Description	No. Used
13	631022	Clip, Inlet Needle	1
14	632019	Float, Carburetor	1
15	631024	Shaft, Float	1
16	631700	Bowl, Float	1
21	631334	Gasket, Bowl-to-body	1
22	631935	Nut, Float Bowl	1
25	631028	Gasket, Bowl-to-body	1
26	631807	Fitting, Fuel Inlet	1
27	632158	Spacer	1

ENGINE TECUMSEH MODEL NO. TNT 100-10084E

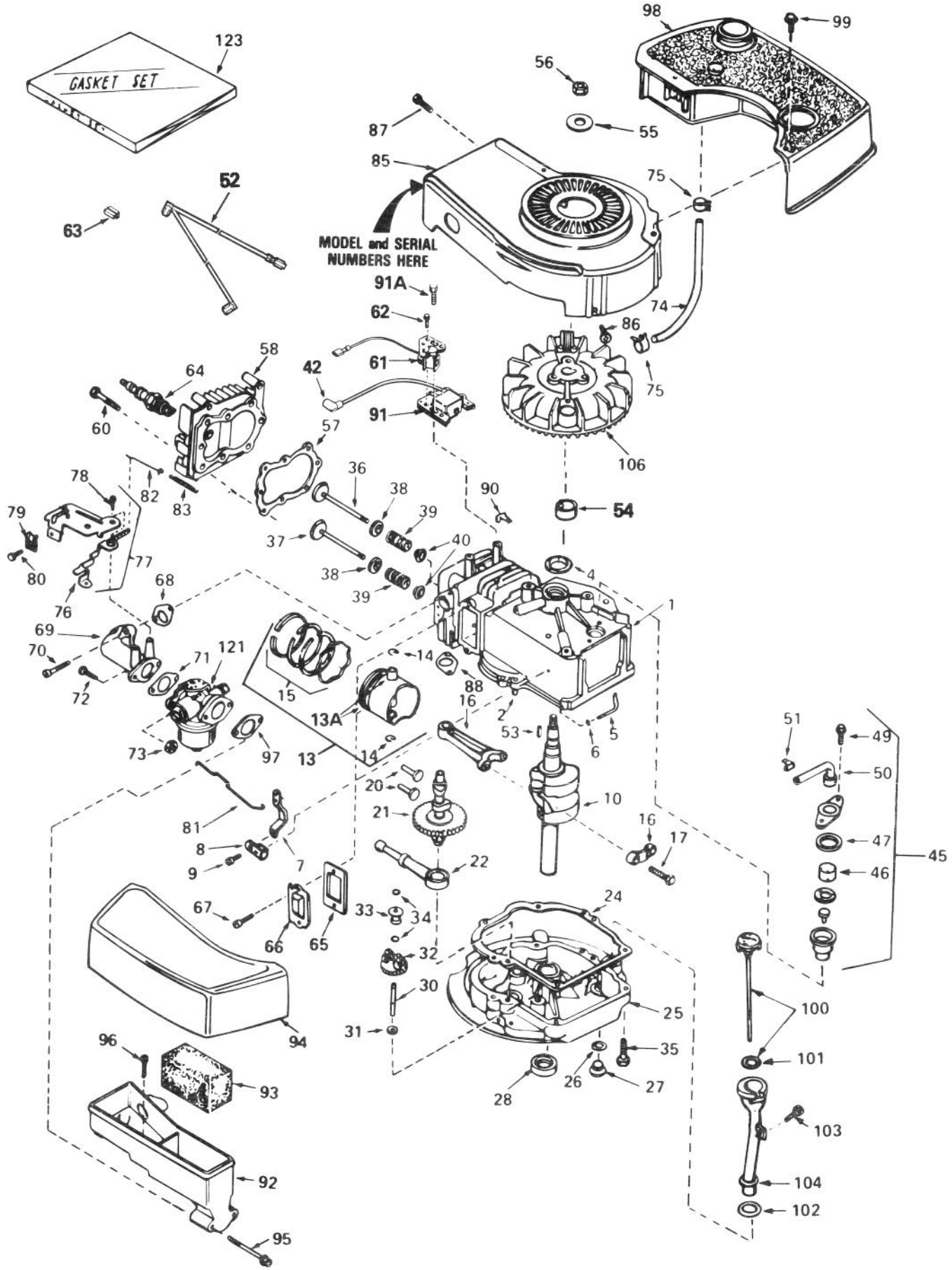

ENGINE TECUMSEH MODEL NO. TNT 100-10084E

Ref. No.	Part No.	Description	No. Used
1	34429	Cylinder Assy. (Incl. #2 & 4)	1
2	26727	Pin, Dowel	2
4	32600	Seal, Oil	1
5	30589	Rod, Governor (Incl. #6)	1
6	28277	Washer, Flat	1
7	32651	Lever, Governor	1
8	31335	Clamp, Governor Lever	1
9	650548	Screw, Hex Washer Hd.	1
10	34440	Crankshaft	1
13	34851	Piston, Pin & Ring Assy. (Std.) (Incl. #13A, 14 & 15)	1
13	34852	Piston, Pin & Ring Assy. (.010 oversize) (Incl. #13A, 14 & 15)	1
13	34853	Piston, Pin & Ring Assy. (.020 oversize) (Incl. #13A, 14 & 15)	1
13A	32603B	Piston & Pin Assy. (Std.) (Incl. #14)	1
13A	32604B	Piston & Pin Assy. (.010 oversize) (Incl. #14)	1
13A	32605B	Piston & Pin Assy. (.020 oversize) (Incl. #14)	1
14	20381	Ring, Piston Pin Retaining	2
15	34854	Ring Set, Piston (Std.)	1
15	34855	Ring Set, Piston (.010 oversize)	1
15	34856	Ring Set, Piston (.020 oversize)	1
16	30963B	Rod Assy., Connecting (Incl.#17)	1
17	32610A	Bolt, Connecting Rod	2
20	27241	Lifter, Valve	2
21	33553	Camshaft (Mech. Compression Release)	1
22	29914	Pump Assy., Oil	1
24	*26750A	Gasket, Mounting Flange	1
25	30594B	Flange Assy., Mounting (Incl. #26 thru 30)	1
26	*28833	Gasket, Oil Drain Plug	1
27	27244	Plug, Oil Drain	1
28	26208	Seal, Oil	1
30	30574	Shaft, Mechanical Governor	1
31	30590A	Washer, Flat	1
32	30591	Gear Assy., Governor (Incl. #31)	1
33	30588A	Spool, Governor	1
34	29193	Ring, Retaining	2
35	650488	Screw, Hex Hd.	6
36	29314B	Valve, Intake (Std.) (Incl. #40)	1
36	29315C	Valve, Intake (1/32" oversize) (Incl. #40)	1
37	29313C	Valve, Exhaust (Std.) (Incl. #40)	1
37	29315C	Valve, Exhaust (1/32" oversize) (Incl. #40)	1
38	31671	Cap, Upper Valve Spring	2
39	31672	Spring, Valve	2
40	31673	Cap, Lower Valve Spring	2
42	610118	Cover, Spark Plug	1
45	34214A	Breather Assy. (Incl. #46 thru 51)	1
46	33734	Element, Breather	1
47	*33735	Gasket, Breather	1
49	30200	Screw, Hex Washer Hd. Self-Tap.	2
50	33886	Tube, Breather	1
51	33887	Clip, Breather Tube	1
52	35020	Wire, Ground	1
53	611004	Key, Flywheel (Solid State)	1
54	34080	Spacer, Flywheel Key	1
55	650815	Washer, Belleville	1
56	650816	Nut, Flywheel	1
57	*33015	Gasket, Cylinder Head	1
58	34342	Head, Cylinder	1
60	6021A	Screw, Hex Flange Hd.	8
61	34990	Coil, Alternator	1
62	650767	Screw, Hex Washer Hd.	2
63	34977	Connector, Body (Double Wire)	1
64	33636	Plug, Spark (Champion J-8 or equivalent) *Except for Canada*	1
64	34251 Canada	Resistor Spark Plug (Canadian Regulations require RJ-17LM Resistor Spark Plug)	1
65	*27234	Gasket, Valve Spring Cover	1
66	32755	Cover, Valve Spring Box	1
67	650128	Screw, Fil. Hd.	2
68	*34690	Gasket, Intake Pipe	1
69	33004A	Pipe, Intake (Incl. No. 68)	1
70	650451	Screw, Hex Hd.	2
71	*31688	Gasket, Carburetor	1
72	6201	Screw, Hex Hd.	2
73	29752	Nut & Lockwasher Assy.	2
74	30705	Line, Fuel	1
75	26460	Clamp, Fuel Line	2
76	34310	Lever, Control	1
77	33889A	Control Assy., Speed (Incl. #76 & 78)	1
78	650804	Screw, Hex Washer Hd. Shoulder Self-Tap.	1
79	27793	Clip, Conduit	1
80	28942	Screw, Hex Washer Hd.	1
81	34336	Link, Governor-to-throttle	1
82	33151	Link, Governor Spring	1
83	33890	Spring, Governor	1
85	33891B	Housing, Blower	1
86	650561	Screw, Hex Washer Hd.	2
87	30200	Screw, Hex Washer Hd. Self-Tap.	2
88	*30081	Gasket, Exhaust	1
90	29443	Clip, Fuel Line	1
91	34443A	Lamination & Coil Assy. (Solid State) (Incl. #42)	1
91A	650814	Screw, Hex Hd.	2
92	33895	Body, Air Cleaner	1
93	33896	Filter, Air Cleaner	1
94	33897	Cover, Air Cleaner	1
95	650762	Screw, Fil. Hd.	2
96	650784	Screw, Hex Hd. Taptite w/Flatwasher	1
97	*33051	Gasket, Air Cleaner	1
98	33904B	Tank, Fuel	1
99	28763	Screw, Hex Washer Hd.	2
100	33894A	Dipstick, Oil (Incl. #101)	1
101	33590	"O" Ring	1
102	34265	Gasket, Fill Tube	1
103	650562	Screw, Hex Washer Hd.	1
104	34380	Tube, Oil Fill	1
106	611050	Flywheel	1
121	632050A	Carburetor (Incl. #71)	1
123	33906A	Gasket Set (Incl. items marked *)	1

*Indicates parts included in Gasket Set, Ref. #123.

PRODUCT CHANGES

In an effort to make improvements available to TORO owners as quickly as possible, minor changes are incorporated into Toro's products from time to time that do not become immediately shown in the Parts Catalog. If such a change apparently has been made in your unit, which is not reflected in your manual, see your TORO Distributor or his Authorized TORO Service Dealer for information and part numbers.

IDENTIFICATION AND ORDERING

MODEL AND SERIAL NUMBERS

The Mower has two identification numbers: a model number and a serial number. The two numbers are stamped on a decal which is located on the mower housing between the rear wheels. In any correspondence concerning the mower, supply model and serial numbers to assure that correct information and replacement parts are obtained.

To order replacement parts from an Authorized TORO Service Dealer, supply the following information:

1. Model and serial numbers of the mower.
2. Part number, description, and quantity of part(s) desired.

Note: Do not order by reference number if a parts catalog is being used; use the PART NUMBER.

The Toro Promise

A TWO YEAR LIMITED WARRANTY

The Toro Company promises to repair your TORO Product if defective in materials or workmanship. The following time periods from the date of purchase apply:

Residential Product ..... 2 Years
Residential Products Used Commercially ..... 45 Days

The costs of parts and labor are included, but the customer pays the transportation costs. Just return any residential product to an Authorized TORO Service Dealer or TORO Distributor.

Should you feel your TORO Product is defective and wish to rely on The Toro Promise, the following procedure is recommended:

1. Contact any Authorized TORO Service Dealer, TORO Master Service Dealer, or TORO Distributor (the Yellow Pages of your telephone directory is a good reference source).
2. He will either instruct you to return the product to him or recommend another Authorized TORO Service outlet which might be more convenient.
3. Bring the product along with your original sales slip, or other evidence of purchase date, to the service dealer.
4. The servicing dealer will inspect the unit, advise you whether the product is defective and, if so, make all repairs necessary to correct the defect without extra charge to you.

If for any reason you are dissatisfied with the dealer's analysis of the defect or the service performed, you may contact us.

Write:

TORO Consumer Service Department
8111 Lyndale Avenue South
Minneapolis, Minnesota 55420

The above remedy of product defects through repair by an Authorized TORO Service Dealer is the purchaser's sole remedy for any defect.

THERE IS NO OTHER EXPRESS WARRANTY. ALL IMPLIED WARRANTIES OF MERCHANTABILITY AND FITNESS FOR USE ARE LIMITED TO THE DURATION OF THE EXPRESS WARRANTY.

Some states do not allow limitations on how long an implied warranty lasts, so the above limitation may not apply to you.

This warranty applies only to parts or components which are defective and does not cover repairs necessary due to normal wear, misuse, accidents, or lack of proper maintenance. Regular, routine maintenance of the unit to keep it in proper operating condition is the responsibility of the owner.

All warranty repairs reimbursable under The Toro Promise must be performed by an Authorized TORO Service Dealer using Toro approved replacement parts.

Repairs or attemped repairs by anyone other than an Authorized TORO Service Account are not reimbursable under The Toro Promise. In addition, these unauthorized repair attempts may result in additional malfunctions, the correction of which is not covered by warranty.

THE TORO COMPANY IS NOT LIABLE FOR INDIRECT, INCIDENTAL OR CONSEQUENTIAL DAMAGES IN CONNECTION WITH THE USE OF THE PRODUCT INCLUDING ANY COST OR EXPENSE OF PROVIDING SUBSTITUTE EQUIPMENT OR SERVICE DURING PERIODS OF MALFUNCTION OR NON-USE.

Some states do not allow the exclusion or limitation of incidental or consequential damages, so the above limitation or exclusion may not apply to you.

This warranty gives you specific legal rights, and you may also have other rights which vary from state to state.

COUNTRIES OTHER THAN THE UNITED STATES OR CANADA

Customers who have purchased TORO products exported from the United States or Canada should contact their TORO Distributor (Dealer) to obtain guarantee policies for your country, province or state. If for any reason you are dissatisfied with your Distributor's service or have difficulty obtaining guarantee information, contact the TORO importer. If all other remedies fail, you may contact us at The Toro Company.