Form No. 3454-964 Rev C

TORO®

Count on it.

Parts Catalog

Power Max® Commercial 1432 OHXE

Snowthrower

Model No. 38844—Serial No. 412000000 and Up

Register at www.Toro.com.
Original Instructions (EN)

3454-964 C

Ordering Replacement Parts

To order replacement parts, please supply the part number, the quantity, and the description of each part desired.

Understanding Reference Numbers

Each identified part in an illustration has a reference number. The reference number for a part also appears in the parts list, along with other information about the part.

This catalog uses two special reference number formats, one to indicate parts in a service assembly and another to indicate the quantity of a given part in an illustration.

Service Assembly Reference Numbers

Parts in service assemblies have reference numbers in the form a:b. The a represents the reference number of the entire service assembly and the b represents a sequential number unique to each part within the service assembly.

For example, a wheel assembly might be identified by reference number 6, the tire by 6:1, the valve by 6:2, and the wheel by 6:3. When you order the assembly identified by reference number 6, you receive all parts identified by reference numbers 6:1,6:2, and 6:3. However, you may also order any part individually. Reference numbers of this type appear in illustration and in parts lists.

Reference Numbers Indicating Quantity

In an illustration, if a reference number indicates more than one part, the reference number has the form nX y. The n represents the quantity of the part, the X is the multiplication symbol, and the y represents the reference number.

For example, in an illustration, the reference number 2X 37 means that two of the parts identified by reference number 37 are indicated.

Contents

Main Frame Assembly 4
Auger Drive Assembly 6
Gear Case Assembly 8
Auger Gear Case Assembly No. 136-6620 10
Engine Assembly 12
Fuel Systems and Carburetor Assembly 14
Intake and Exhaust Assembly 16
Ignition and Electrical Assembly 18
Crankcase Assembly 20
Governor Assembly 22
Piston and Head Assembly 24
Blower Housing and Shrouds Assembly 26
Engine Decal Assembly 28
Chute Assembly 30
Chute Control Assembly 32
Traction Control Assembly 34
Handle Assembly 36
Traction Drive Assembly 38
Attachments and Accessories 40

© 2025—The Toro® Company
8111 Lyndale Avenue South
Bloomington, MN 55420

Contact us at www.Toro.com.
Printed in the USA.
All Rights Reserved

Main Frame Assembly

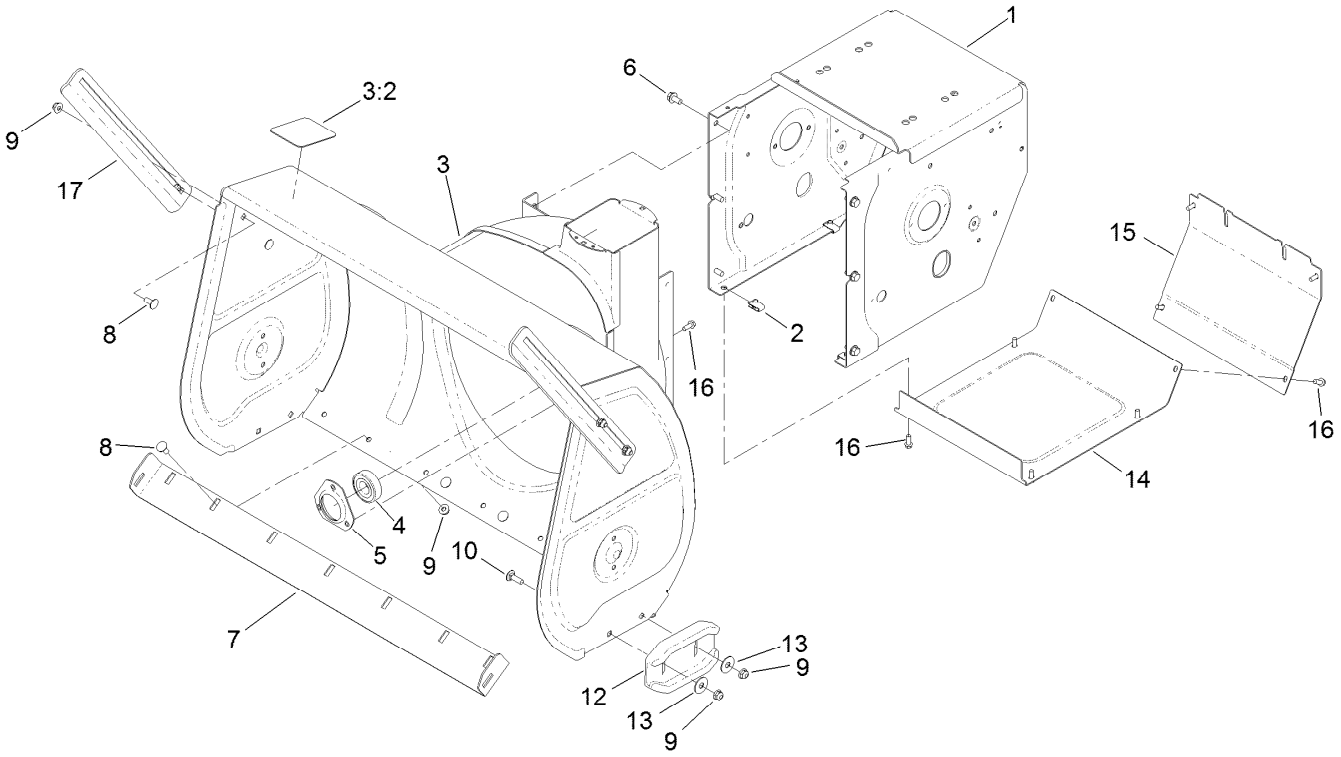

Main Frame Assembly (continued)

Ref.	Part Number	Qty.	Description
1	136-6639-01	1	Frame-Traction
2	107069	8	Clip
3	139-1563	1	Auger Housing ASM
3:2	121-6817	1	Decal-Danger, Auger
4	136-6571	1	Bearing-Ball
5	136-6573	1	Retainer-Bearing
6	32144-14	6	Screw-HWHTF
7	136-6602-01	1	Blade-Scraper
8	137-3061	11	Bolt-CARR

Ref.	Part Number	Qty.	Description
9	119-4041	15	Nut-HF
10	110-3144	4	Bolt-CARR
12	120-3098-03	2	Skid-Cast
13	119-4150	4	Washer-Flat
14	136-6650-01	1	Cover-Bottom
15	136-6651-01	1	Cover-Rear
16	32144-85	11	Screw-HWH Thd Form
17	121-1228-03	2	Breaker-Drift, Side

Auger Drive Assembly

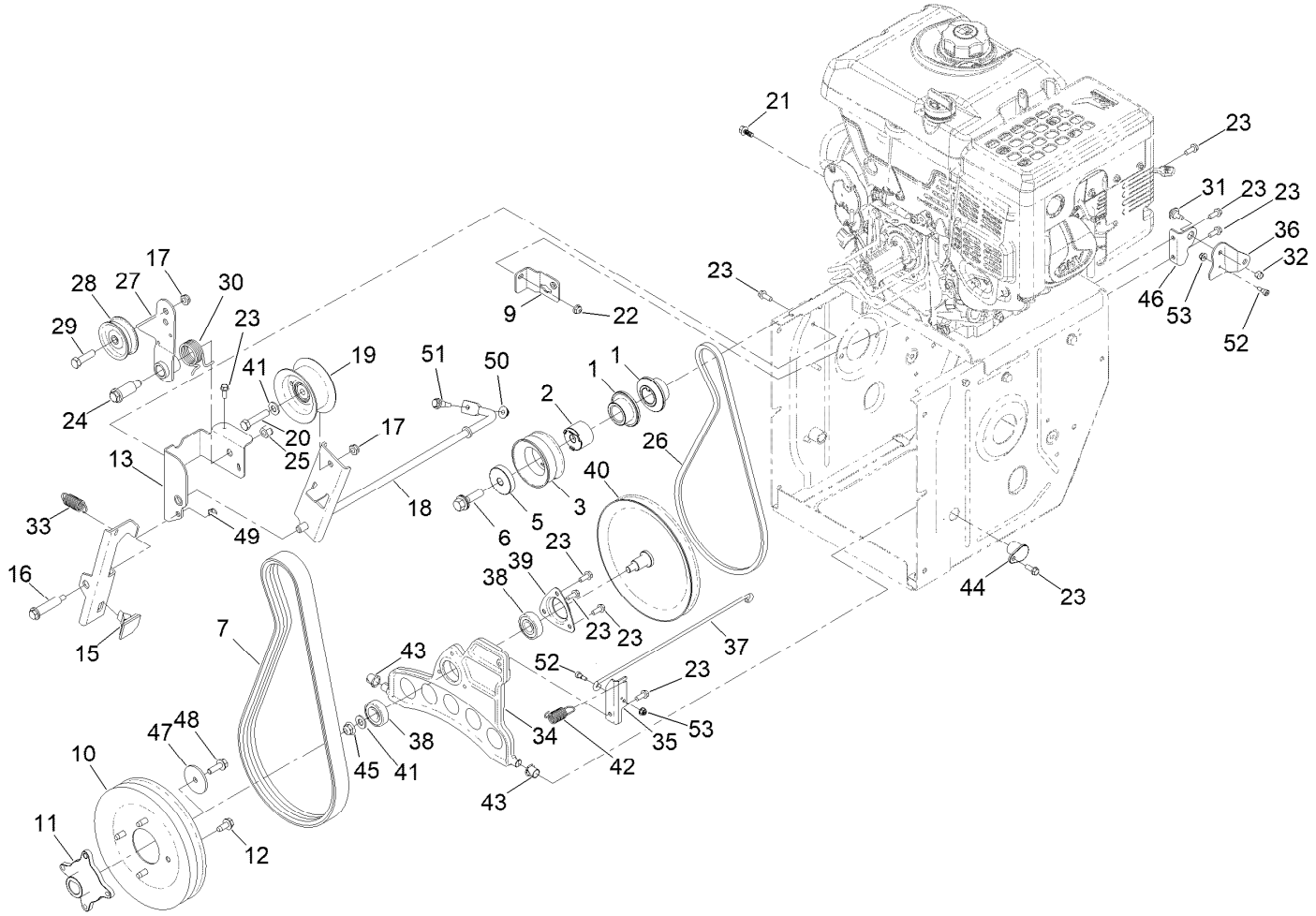

Auger Drive Assembly (continued)

Ref.	Part Number	Qty.	Description
1	136-6564	2	Pulley-Traction, Engine
2	136-6691	1	Pulley-Spacer
3	136-6690	1	Pulley-Impeller, Double Sheave
5	138-3662	1	Support-Pulley
6	125-2466	1	Bolt-Blade
7	136-6504	1	Belt-V
9	136-8654-03	1	Bracket-Clutch, Impeller
10	136-6557	1	Pulley-Impeller, Double Sheave
11	136-6558	1	Hub-Pulley
12	32144-70	4	Screw-HWHTF
13	136-8671-03	1	Bracket-Brake, Clutch
15	66-8060	1	Pad-Brake
16	136-7199	1	Bolt-Shoulder
17	121-4600	2	Nut-Hex
18	137-6234-03	1	Arm-Clutch, Impeller
19	136-6531	1	Pulley, Idler
20	138-0722	1	Screw-HH
21	137-3111	1	Screw-HHF
22	137-3005	1	Nut-HF
23	32144-85	12	Screw-HWH Thd Form
24	136-7116	1	Bolt-Shoulder
25	137-3095	1	Nut-Hex
26	137-6151	1	V-Belt
27	136-7186	1	Arm-Idler, Traction
28	3-4244	1	Pulley-Idler
29	137-3065	1	Screw-HH
30	120-3060	1	Spring-Torsion
31	92-9698	1	Screw-Shoulder
32	137-3094	1	Nut-Hex
33	145-0675	1	Spring-Extension
34	136-6689	1	Plate-Friction, Wheel
35	144-1621	1	Bkt-Traction Plate
36	144-1622	1	Bellcrank-Drive
37	144-1613	1	Link-Traction, HD
38	38-7820	2	Bearing-Ball
39	136-7124	1	Retainer-Bearing
40	137-6154	1	Pulley-Traction
41	115-1166	2	Washer-Plain
42	137-6189	1	Spring-Extension
43	256-257	2	Bushing-Nyliner
44	120-7156	2	Bushing-Plate, Traction
45	119-4042	1	Nut-HF, NI
46	136-6654	1	Bracket-Bellcrank
47	137-3121	1	Washer-Plain
48	115-5142	1	Screw-HHF, Patch
49	137-3089	1	Nut-Hex
50	137-3016	1	Nut-HF
51	104-0858	1	Bolt-Shoulder
52	94-9422	2	Screw-Shoulder
53	138-0719	2	Nut-HF

Gear Case Assembly

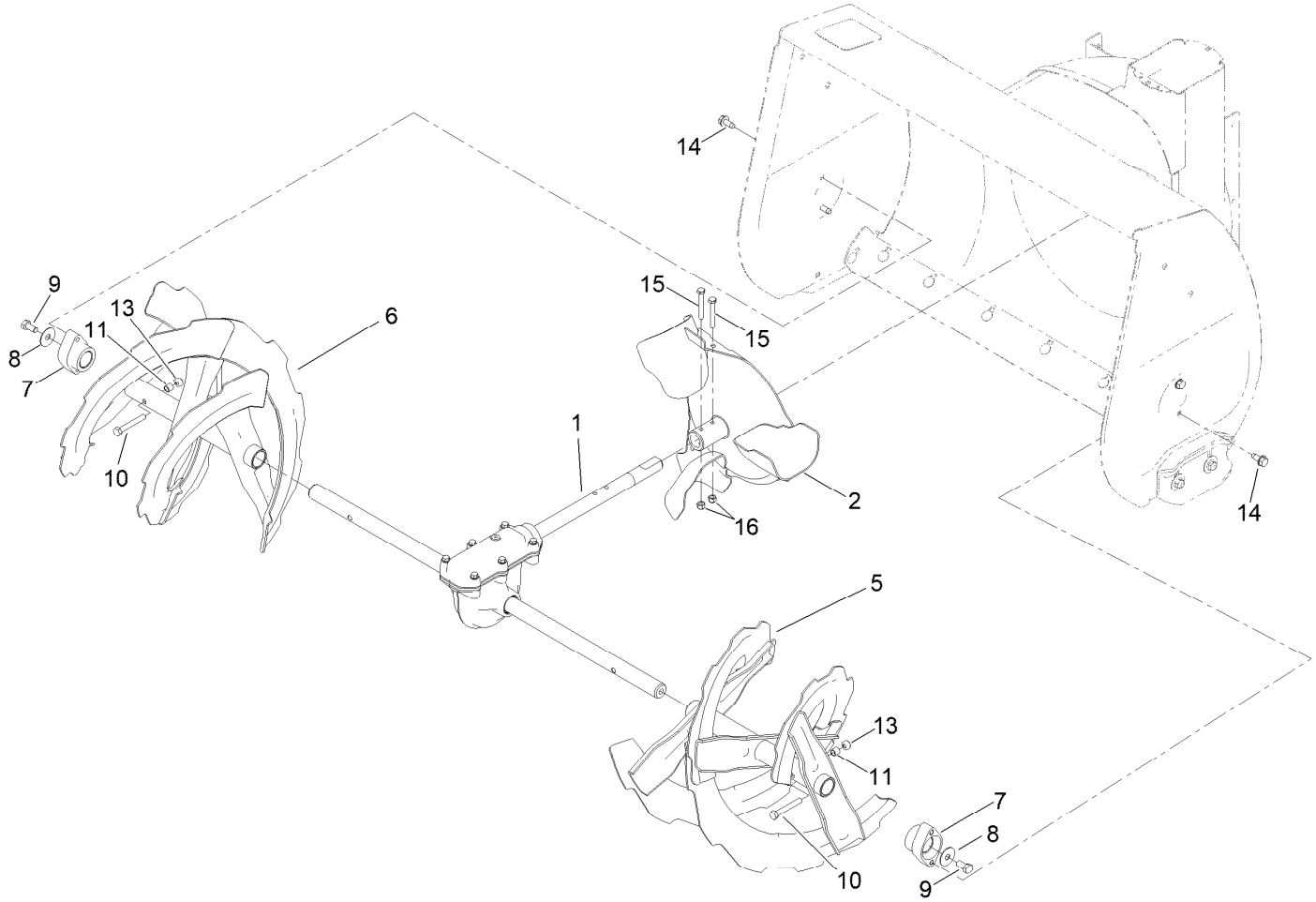

Gear Case Assembly (continued)

Ref.	Part Number	Qty.	Description
1	136-6620	1	Auger Gearcase ASM
2	136-6570-03	1	Impeller
5	136-6597-03	1	Auger-LH, 32 Inch
6	136-6598-03	1	Auger-RH, 32 Inch
7	106-4570	2	Bearing-Auger
8	3-0750	2	Washer
9	137-3066	2	Screw-HH
10	120-9738	2	Screw-HH
11	136-7148	2	Spacer-Grommet
13	119-4038	2	Nut-Hex
14	32144-70	4	Screw-HWHTF
15	137-3032	2	Screw-HH
16	137-3088	2	Nut-Hex

Auger Gear Case Assembly No. 136-6620

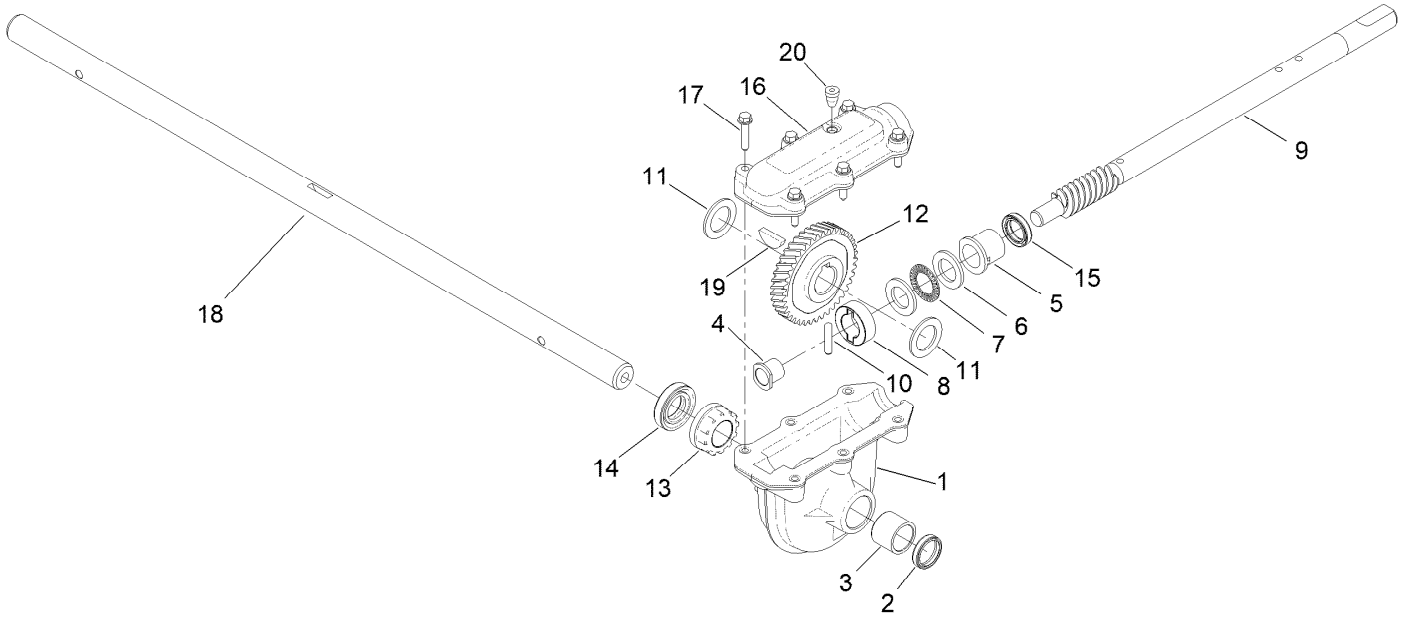

Auger Gear Case Assembly No. 136-6620 (continued)

Ref.	Part Number	Qty.	Description
1	136-6547	1	Gearbox-Lower (Mach)
2	137-6173	1	Seal-Oil
3	112-6635	1	Bushing-Sleeve
4	136-6556	1	Bushing-Impeller Shaft, Front
5	37-6560	1	Bushing-Input
6	252-78	2	Washer-Thrust
7	252-76	1	Bearing-Thrust
8	136-6555	1	Collar-Thrust
9	137-6175	1	Shaft-Impeller
10	107-8899	1	Pin-Dowel
11	252-71	2	Washer-Thrust
12	138-0696	1	Gear-Helical
13	136-6553	1	Bushing-Auger Output
14	136-6554	1	Seal-Oil
15	137-6174	1	Seal-Oil
16	136-6546	1	Cover-Gearcase
17	108-4862	6	Screw-HWH Thd Roll
18	136-6617	1	Shaft-Auger, 32"
19	3257-10	1	Key-Woodruff
20	138-3629	1	Plug-Oil

Engine Assembly

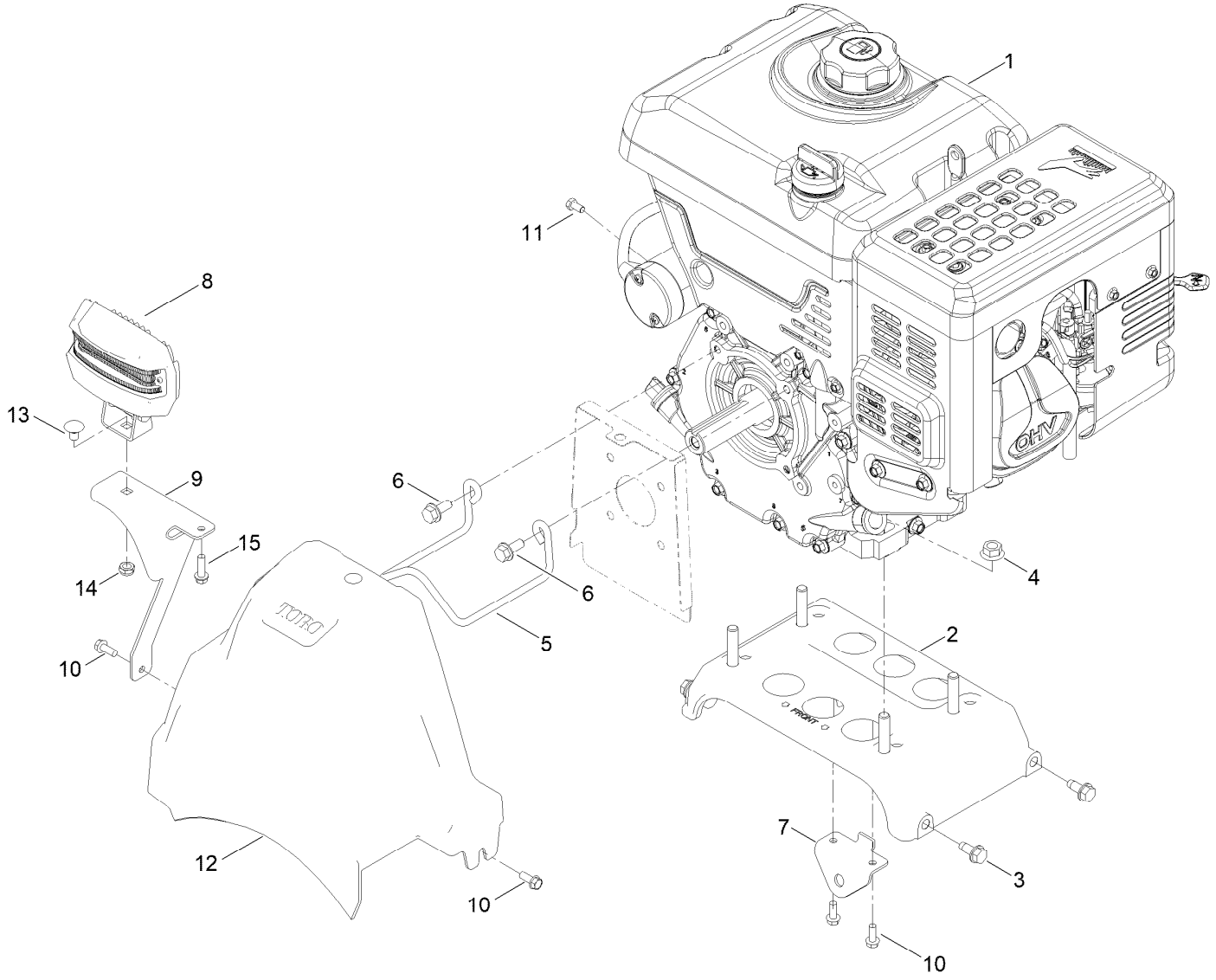

Engine Assembly (continued)

Ref.	Part Number	Qty.	Description
1	136-7796	1	Engine-190Fds
2	137-6165	1	Engine Plate ASM
3	32144-70	4	Screw-HWHTF
4	136-8683	4	Nut-Lock
5	136-6607	1	Belt Guide
6	138-0690	2	Screw-HHF,Patch
7	136-6644-03	1	Bracket-Control, Traction
8	138-0670	1	LED Light ASM
9	138-0683-03	1	Bracket-Light
10	32144-85	2	Screw-HWH Thd Form
11	121-4615	1	Screw-HH
12	136-6606	1	Cover-Belt
13	3230-19	1	Bolt-CARR
14	137-3089	1	Nut-Hex
15	137-3099	1	Screw-Plastite, HWH

Fuel Systems and Carburetor Assembly

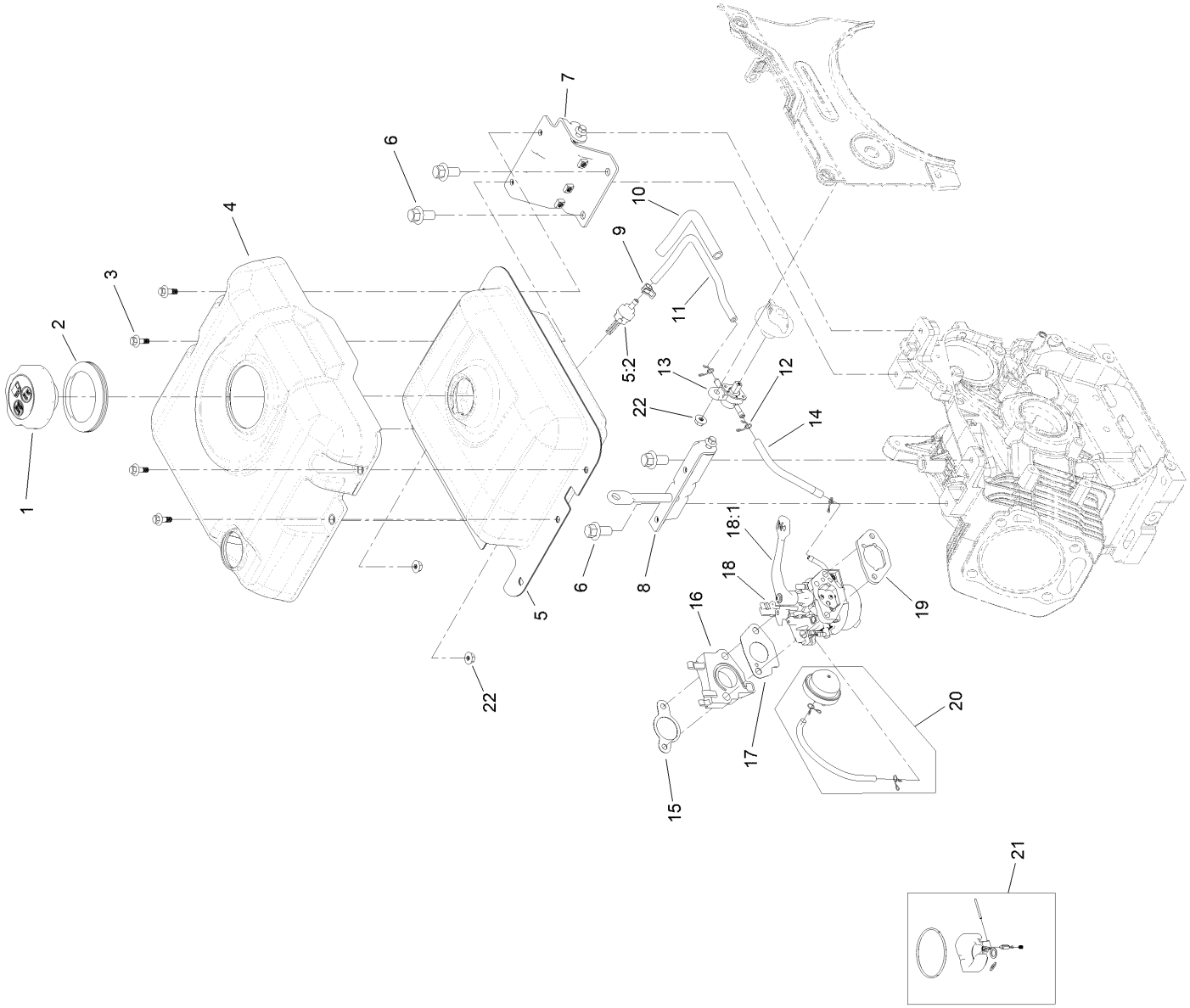

Fuel Systems and Carburetor Assembly (continued)

Ref.	Part Number	Qty.	Description
1	133-9823	1	Cap-Fuel
2	121-0324	1	Insert-Cover, Tank
3	121-0296	4	Screw-HHF
4	139-0574	1	Cover-Tank, Fuel
5	139-0567	1	Fuel Tank And Filter ASM
5:2	127-9065	1	Filter-Fuel
6	139-0569	4	Screw-HHF
7	139-0571	1	Bracket-Tank, Right
8	139-0570	1	Bracket-Tank, Left
9	127-9120	1	Clamp-Hose
10	139-0566	1	Sleeve-Abrasion
11	127-9064	1	Hose-Fuel
12	121-0087	3	Clamp-Hose
13	121-0258	1	Valve-Fuel
14	139-0583	1	Hose-Fuel
15	139-0579	1	Gasket-Carburetor
16	139-0580	1	Insulator-Carburetor
17	139-0581	1	Gasket-Carburetor
18	139-0594	1	Carburetor ASM
18:1	139-0638	1	Lever-Choke
19	121-0254	1	Gasket-Coated, Rubber
20	127-9372	1	Primer Kit
21	139-0625	1	Internal Carb Service Kit
22	121-0010	3	Nut-Flange
99	139-0610	1	High Altitude Kit ●

● Not illustrated

Intake and Exhaust Assembly

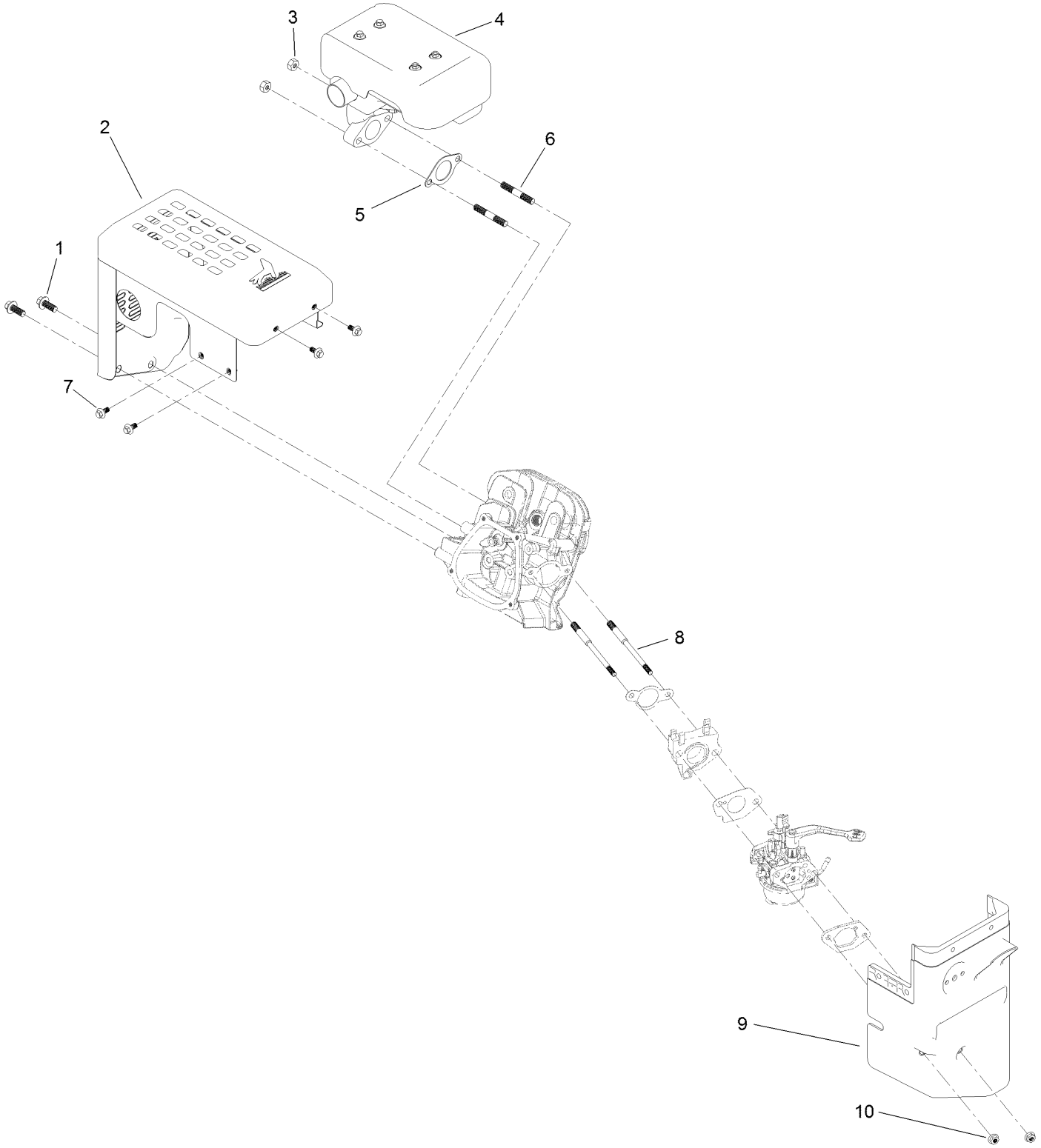

Intake and Exhaust Assembly (continued)

Ref.	Part Number	Qty.	Description
1	121-0297	2	Screw-HHF
2	139-0577	1	Shield-Muffler
3	121-0199	2	Nut-HH
4	139-0578	1	Muffler ASM
5	121-0272	1	Gasket-Exhaust
6	121-0304	2	Stud-Mount, Muffler
7	121-0294	4	Screw-HHF
8	121-0303	2	Stud-Mount, Carburetor
9	139-0585	1	Box-Heater
10	121-0308	2	Nut-Flange

Ignition and Electrical Assembly

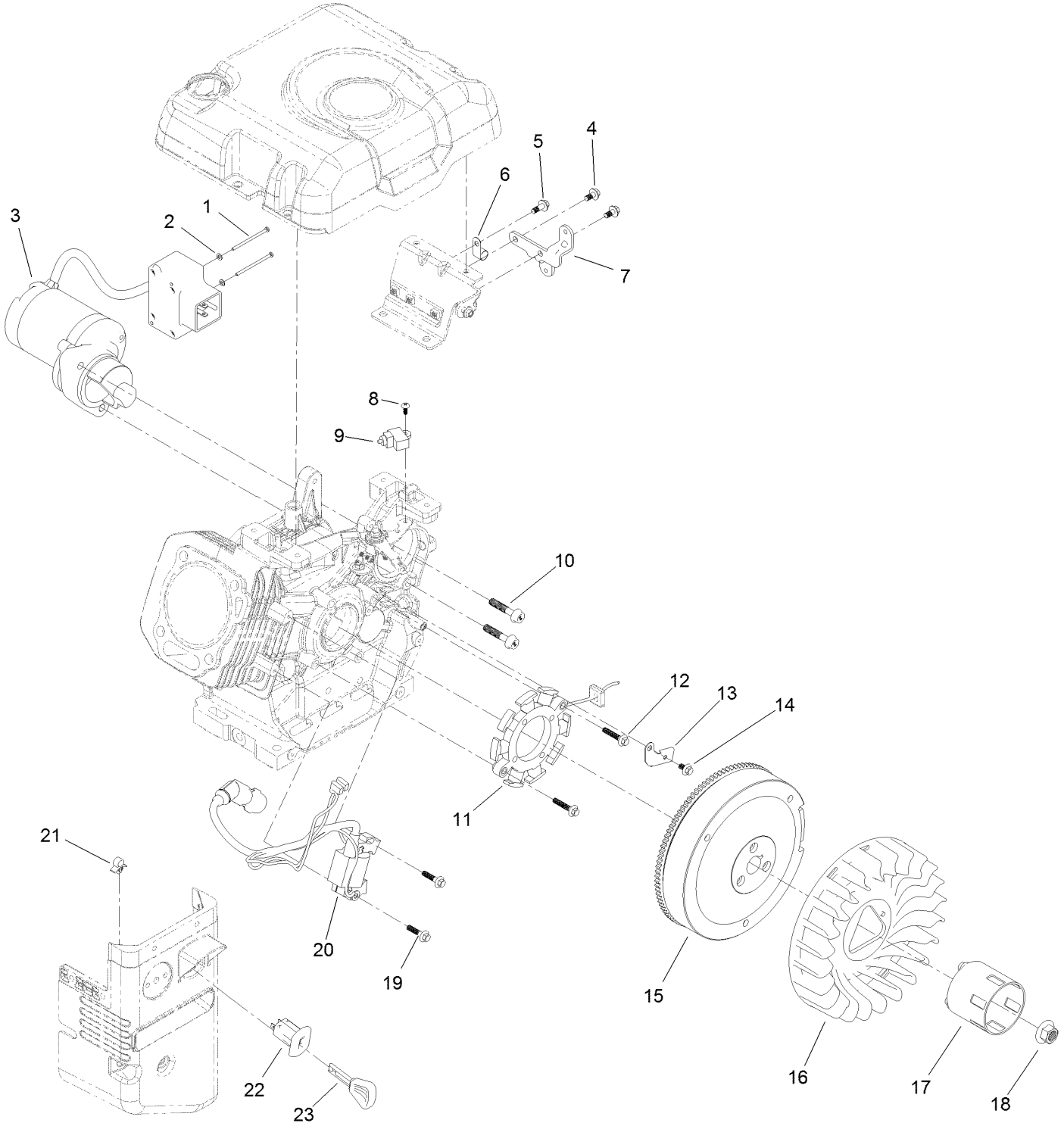

Ignition and Electrical Assembly (continued)

Ref.	Part Number	Qty.	Description
1	121-0306	2	Screw-Bhp
2	121-0312	2	Washer-Plain
3	144-0991	1	Motor-Starter
4	121-0294	2	Screw-HHF
5	121-0296	1	Screw-HHF
6	121-0017	1	Clip-Harness, Wire
7	139-0572	1	Bracket-Box, Switch
8	120-4461	1	Screw-PPH
9	139-0563	1	Switch-Stop, Engine
10	121-0298	2	Screw-HHF
11	121-4108	1	Stator Coil ASM
12	120-4223	2	Screw-HHF
13	139-0555	1	Clamp-Wire, Charge
14	121-0118	1	Screw-HHF
15	139-0558	1	Flywheel ASM
16	139-0559	1	Fan-Cooling
17	139-0560	1	Cup-Starter
18	121-0309	1	Nut-Flange
19	121-0097	2	Screw-HHF
20	139-0557	1	Ignition Coil ASM
21	121-0326	1	Clip
22	121-0283	1	Switch-Key
23	117-7728	1	Key

Crankcase Assembly

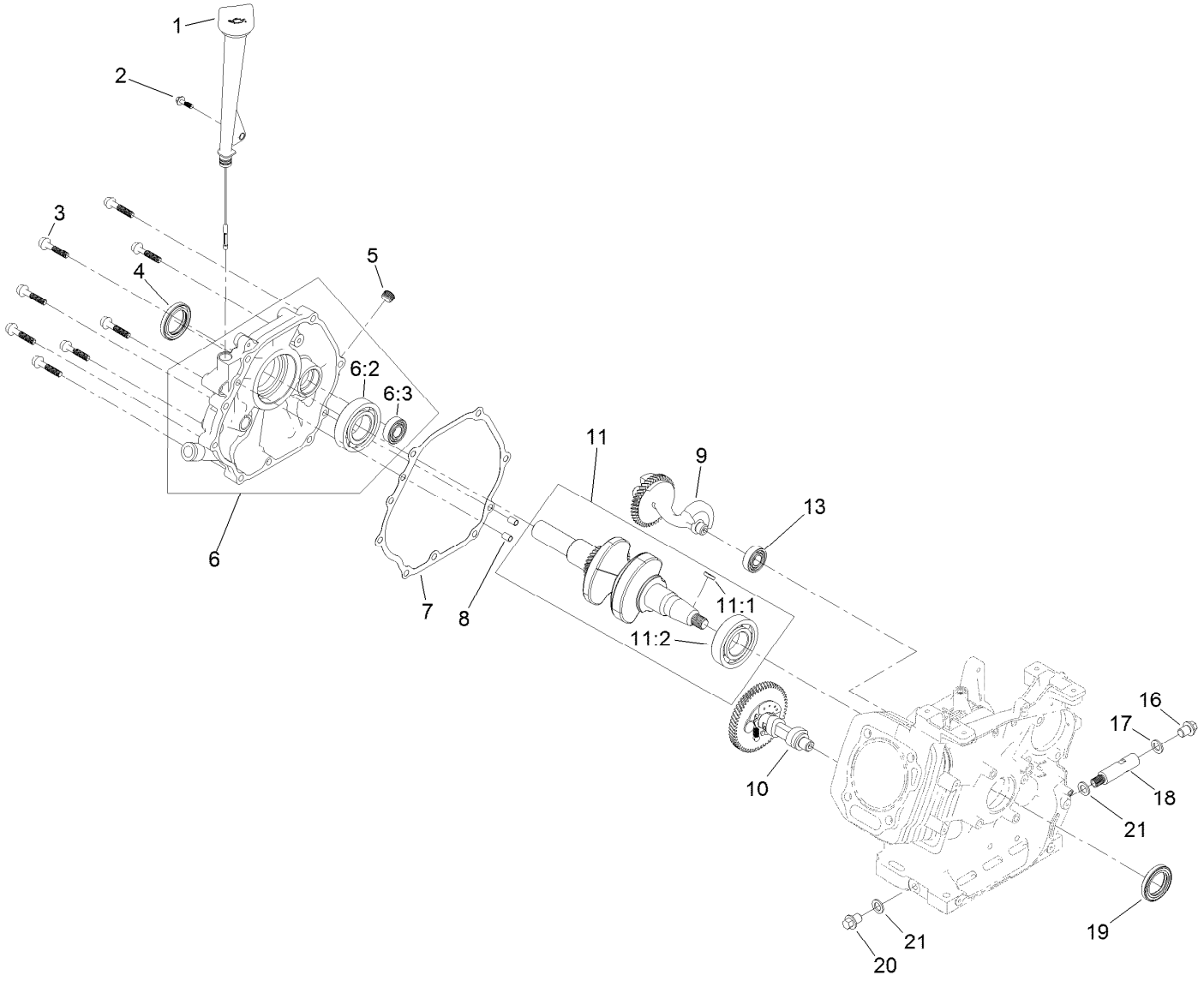

Crankcase Assembly (continued)

Ref.	Part Number	Qty.	Description
1	136-7941	1	Oil Fill ASM
2	127-9123	1	Screw-HHF
3	121-0298	8	Screw-HHF
4	136-7942	1	Seal-Oil
5	133-9805	1	Plug-Drain
6	139-0611	1	Crankcase Cover ASM
6:2	120-4261	1	Bearing-Ball
6:3	136-7949	1	Bearing-Ball
7	136-7945	1	Gasket-Cover, Case
8	121-0314	2	Pin-Dowel
9	139-0550	1	Shaft-Balance

Ref.	Part Number	Qty.	Description
10	136-7939	1	Camshaft ASM
11	139-0586	1	Crankshaft ASM
11:1	120-4320	1	Key-Woodruff
11:2	120-4261	1	Bearing-Ball
13	136-7949	1	Bearing-Ball
16	121-0030	1	Screw-HHF
17	121-0048	1	Washer-Plain
18	121-0229	1	Tube-Drain, Oil
19	139-0556	1	Seal-Oil
20	121-0222	1	Screw-HHF
21	121-0310	2	Washer-Plain

Governor Assembly

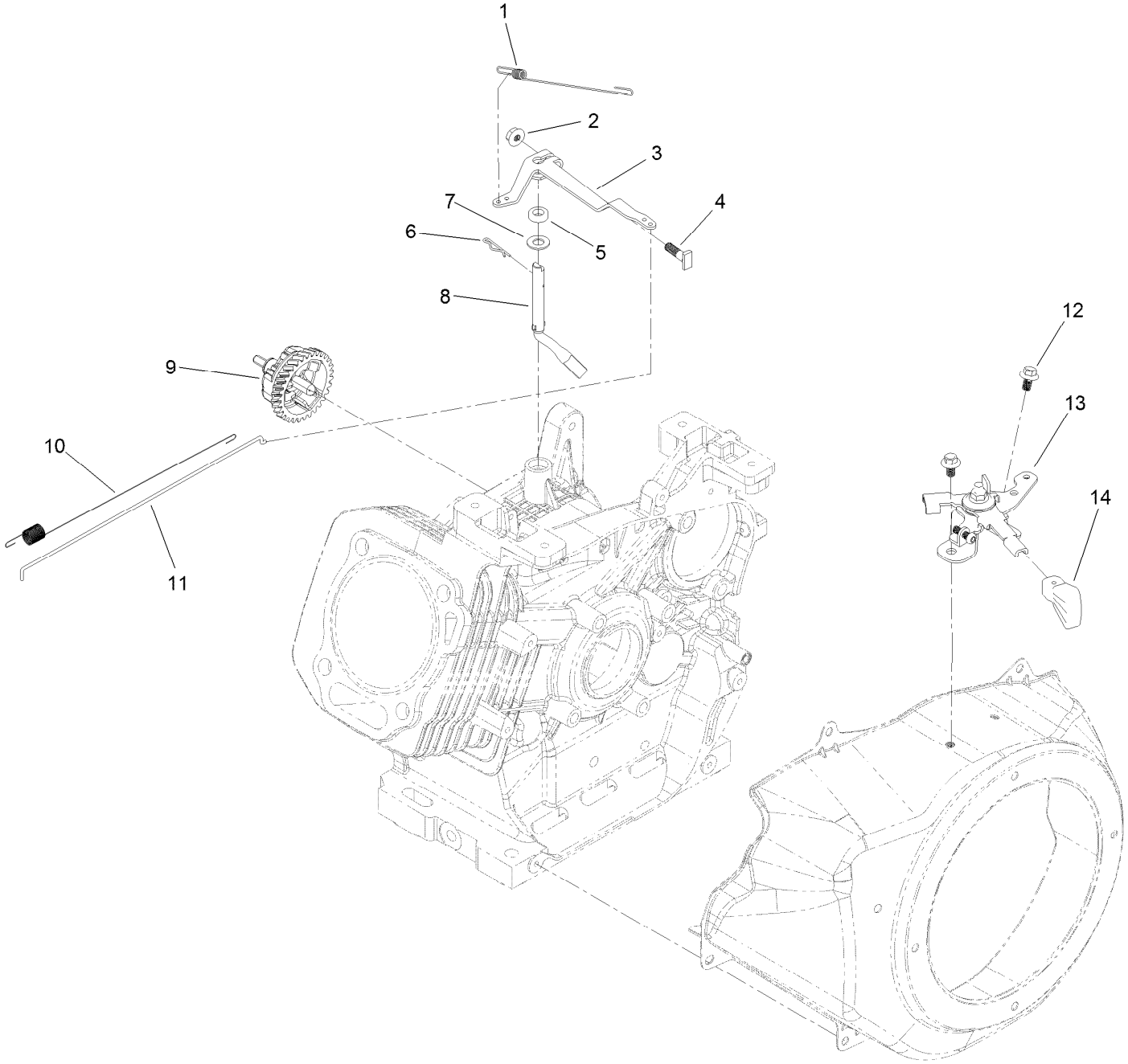

Governor Assembly (continued)

Ref.	Part Number	Qty.	Description
1	139-0564	1	Spring-Governor
2	139-0552	1	Nut-Flange
3	139-0551	1	Arm-Governor
4	120-4238	1	Bolt-Arm, Governor
5	120-4257	1	Seal-Oil
6	120-4256	1	Pin-Hair
7	121-0311	1	Washer-Plain
8	139-0553	1	Shaft-Governor
9	136-7944	1	Governor Gear ASM
10	121-0261	1	Spring-Return, Throttle
11	139-0584	1	Rod-Governor
12	121-0118	2	Screw-HHF
13	139-0562	1	Throttle Control ASM
14	121-0269	1	Knob-Control, Throttle

Piston and Head Assembly

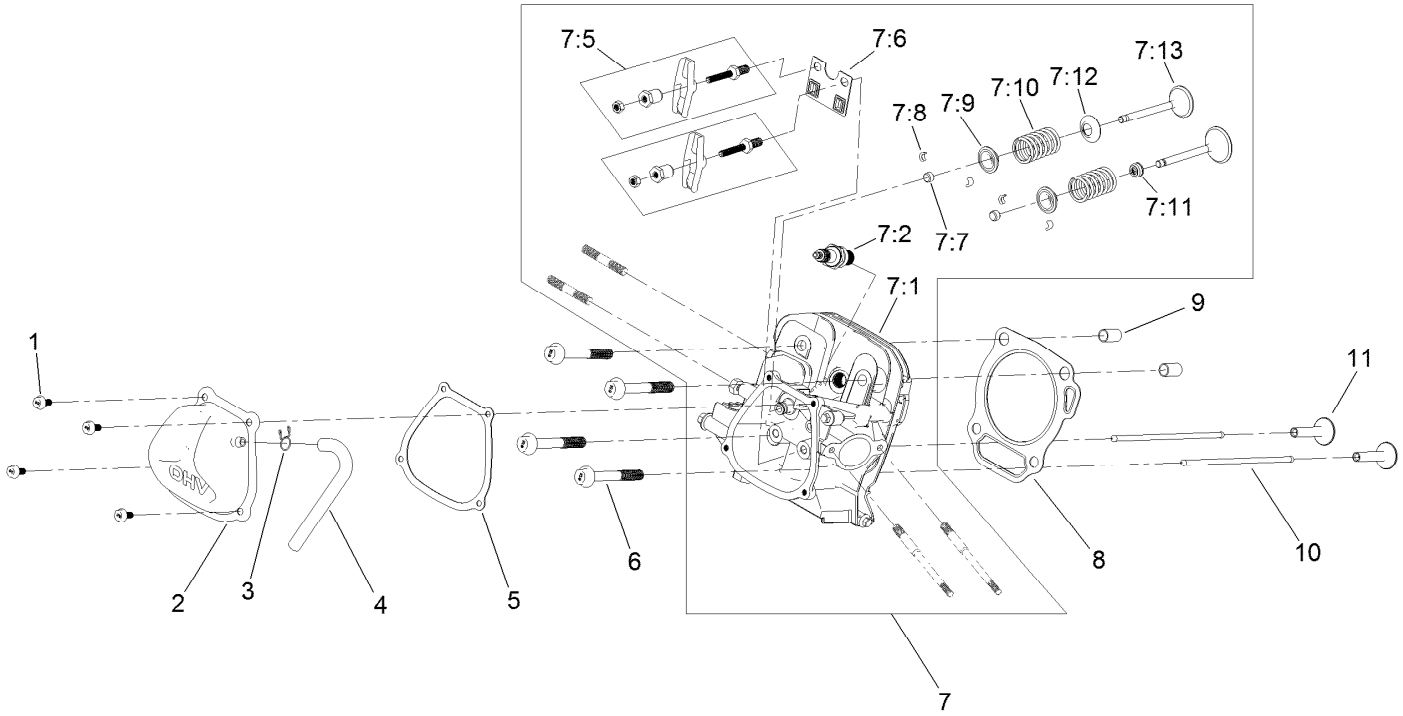

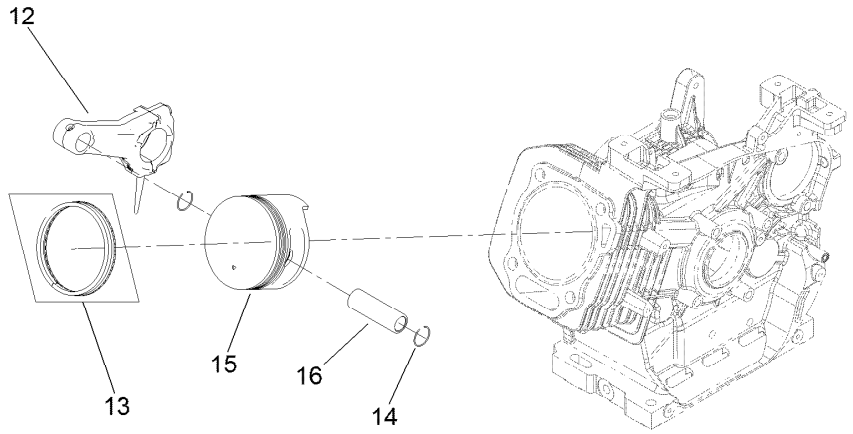

Piston and Head Assembly (continued)

Ref.	Part Number	Qty.	Description
1	121-0044	4	Screw-HHF
2	121-0233	1	Valve Cover ASM
3	127-9408	1	Clamp-Hose
4	139-0629	1	Tube-Breather
5	121-0234	1	Gasket-Cover, Valve
6	121-0302	4	Screw-HHF
7	139-0595	1	Complete Head ASM
7:1	136-7932	1	Head-Cylinder
7:2	81-3250	1	Spark Plug
7:5	121-0245	2	Rocker Arm ASM
7:6	121-0247	1	Plate-Guide, Push Rod
7:7	121-0244	2	Rotator-Valve
7:8	120-4307	4	Keeper-Valve
7:9	120-4306	2	Retainer-Spring, Valve
7:10	120-4305	2	Spring-Valve
7:11	120-4304	1	Seal-Stem, Valve
7:12	120-4303	1	Seat-Spring, Valve
7:13	136-7940	1	Valve Set
8	139-0590	1	Gasket-Head, Cylinder
9	120-4200	2	Pin-Dowel
10	136-7938	2	Rod-Push
11	120-4298	2	Lifter-Valve
12	136-7946	1	Connecting Rod ASM
13	139-0592	1	Ring Set
14	120-4288	2	Ring-Retaining, Piston Pin
15	139-0591	1	Piston
16	120-4291	1	Pin-Piston

Blower Housing and Shrouds Assembly

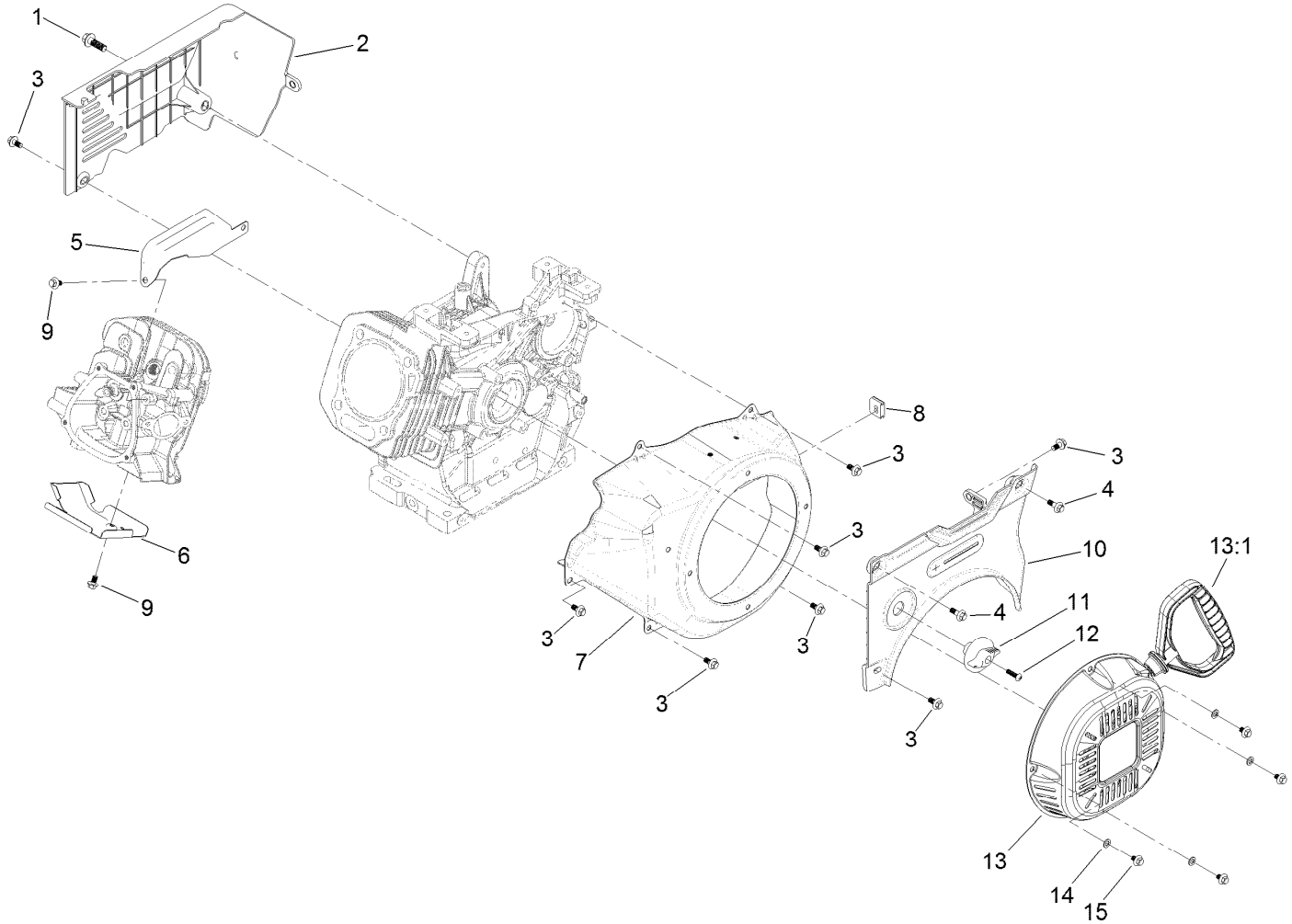

Blower Housing and Shrouds Assembly (continued)

Ref.	Part Number	Qty.	Description
1	139-0575	1	Screw-HHF
2	139-0576	1	Panel-Rear
3	121-0294	8	Screw-HHF
4	121-0296	2	Screw-HHF
5	136-7937	1	Shroud-Head, Upper
6	136-7933	1	Shroud-Head, Lower
7	121-0307	1	Shroud-Recoil
8	121-0325	1	Grommet-Rubber
9	121-0118	2	Screw-HHF
10	139-0565	1	Panel-Control, Front
11	121-0268	1	Knob-Valve, Fuel
12	121-0305	1	Screw-Bhp
13	139-0561	1	Recoil ASM
13:1	121-0287	1	Handle-Recoil
14	127-9380	4	Washer-Plain
15	127-9031	4	Screw-HHF

Engine Decal Assembly

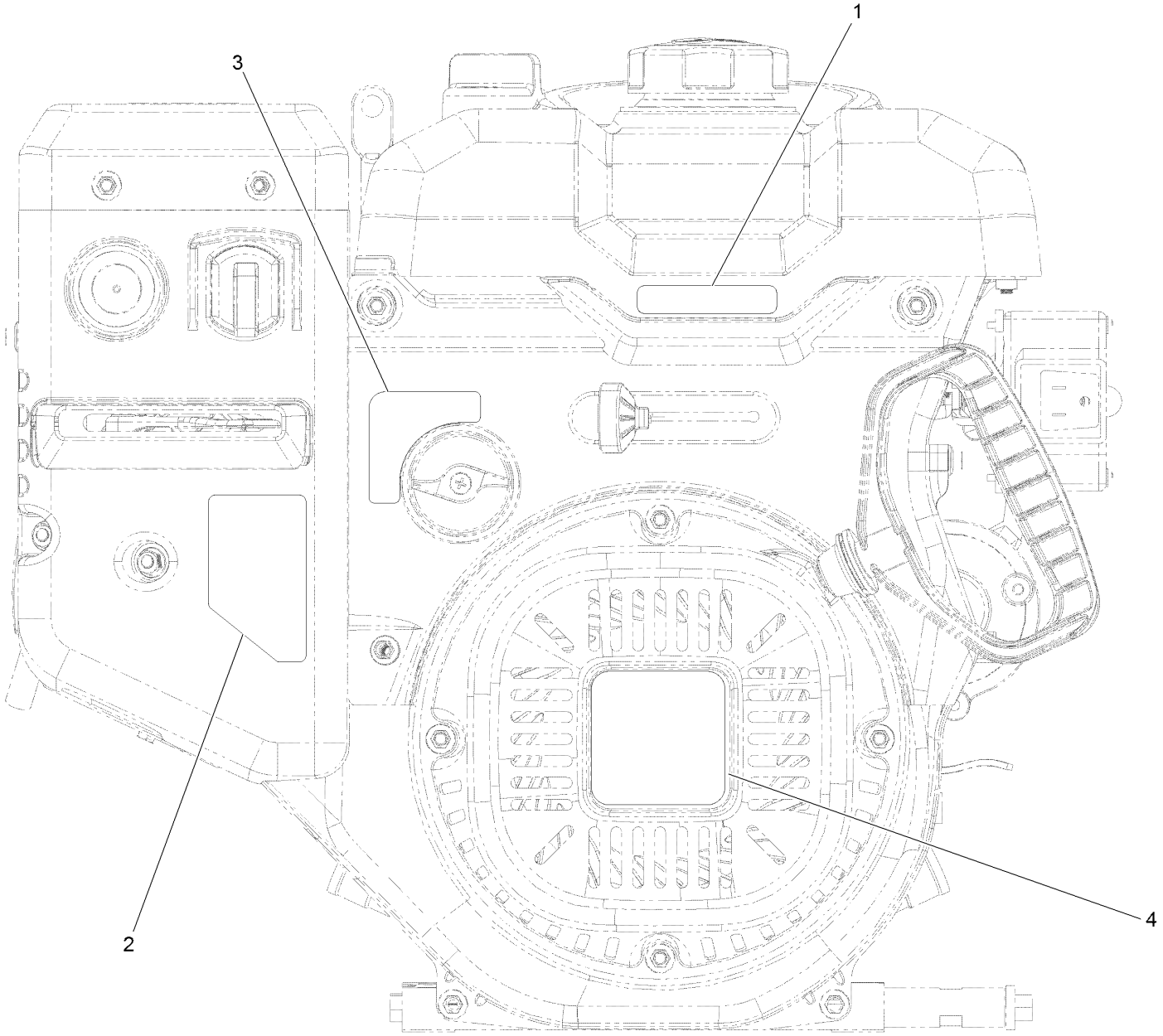

Engine Decal Assembly (continued)

Ref.	Part Number	Qty.	Description
1	131-6487	1	Decal-Throttle
2	120-9805	1	Decal-Control, Engine
3	136-7825	1	Decal-Valve, Fuel
4	138-3622	1	Decal-Recoil

Chute Assembly

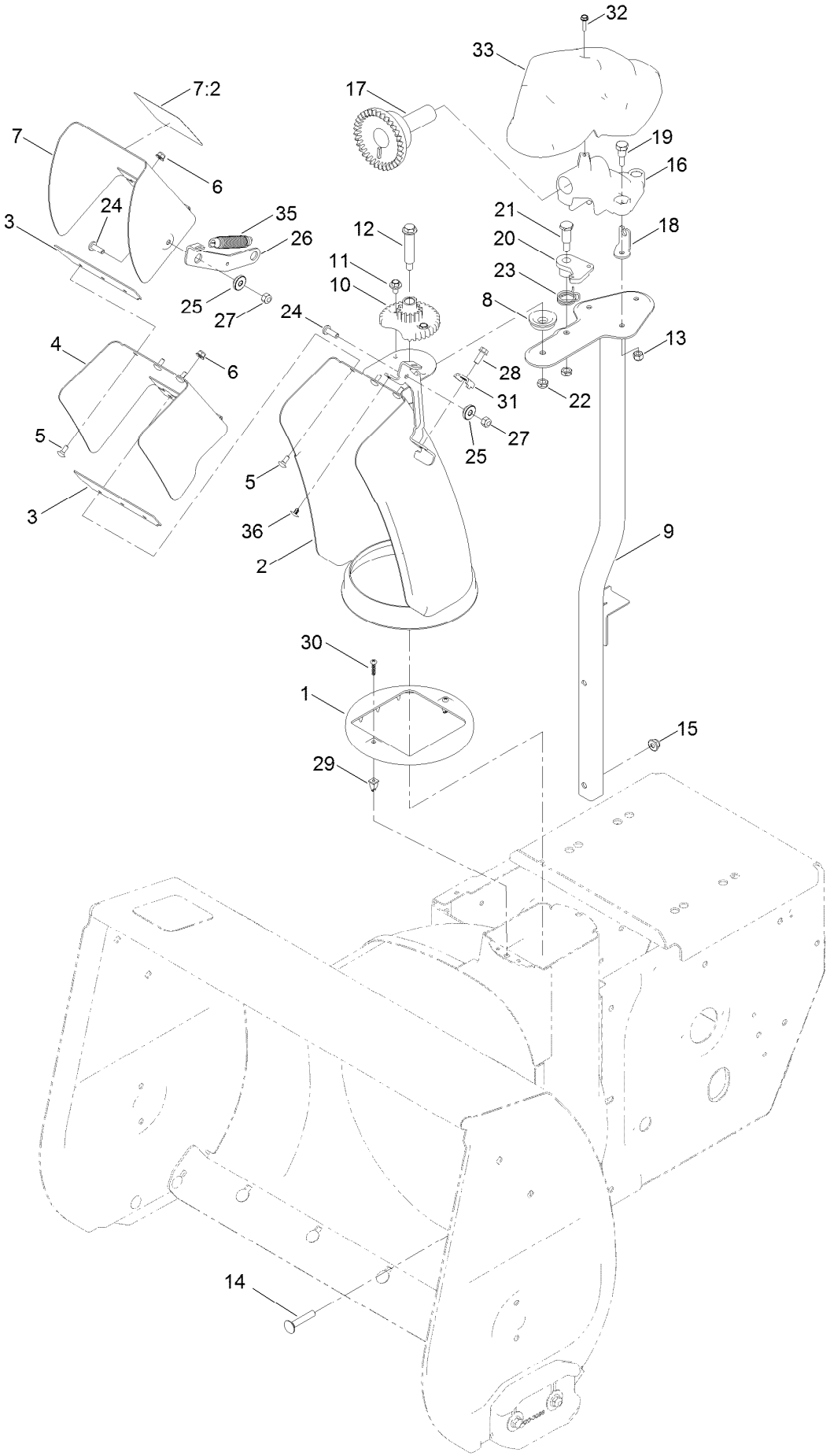

Chute Assembly (continued)

Ref.	Part Number	Qty.	Description
1	136-6515	1	Guide-Chute
2	136-6580-01	1	Lower Chute ASM
3	138-3671	2	Gasket-Deflector
4	136-6582-01	1	Middle Deflector ASM
5	135-1929	6	Bolt-CARR
6	138-0719	6	Nut-HF
7	139-1564	1	Deflector ASM
7:2	121-6847	1	Decal-Danger
8	106-4422	1	Spacer-Chute
9	137-6245-03	1	Chute Post ASM
10	106-4472	1	Gear-Chute
11	46-6810	2	Screw And Washer ASM
12	136-7199	1	Bolt-Shoulder
13	137-3088	3	Nut-Hex
14	137-3063	2	Bolt-Car
15	119-4041	2	Nut-HF
16	136-6517	1	Mount-Gear, Face
17	106-4471	1	Gear-Face
18	136-6676	1	Anchor-Cable
19	136-7197	3	Screw-Shoulder
20	136-6525	1	Latch-Chute
21	137-3103	1	Screw-Shoulder, HH
22	137-3089	2	Nut-Hex
23	108-7315	1	Spring-Torsion
24	138-0689	2	Screw-PH
25	138-0687	2	Bushing-Pivot
26	136-6522	1	Link-Deflector
27	137-3094	2	Nut-Hex
28	32144-85	1	Screw-HWH Thd Form
29	136-6586	2	Grommet-Screw
30	94-4496	2	Screw-PPH
31	136-7191	1	Clamp-Cable
32	137-3110	1	Screw-Plastite, HWH
33	136-6672	1	Cover-Gear, Face
35	132-6915	1	Spring-Extension
36	138-3651	1	Plug-Plastic

Chute Control Assembly

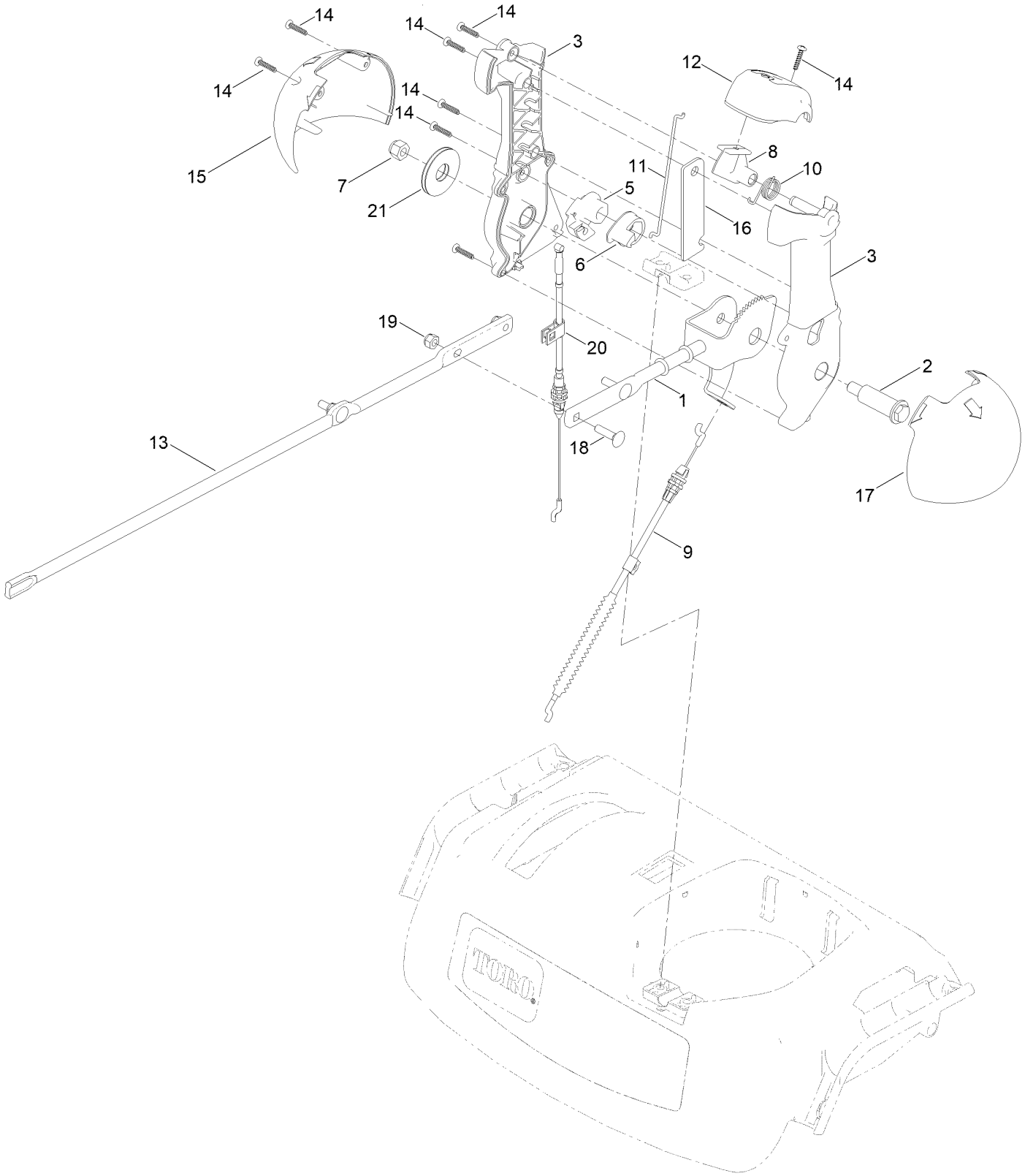

Chute Control Assembly (continued)

Ref.	Part Number	Qty.	Description
1	138-0662	1	Rod-Control, Chute
2	138-0659	1	Screw-Shoulder, HWH
3	139-1552	1	Chute Control Lever ASM
5	105-9988	1	Lever-Cable, Deflector
6	106-7310	1	Pawl-Latch
7	137-3087	1	Nut-Hex
8	137-6238	1	Trigger-Latch
9	138-0730	1	Cable-Control, Deflector
10	105-9982	1	Spring-Torsion
11	138-0688	1	Link-Latch
12	137-6239	1	Cap-Lever
13	136-6578	1	Rod-Chute, Rotation
14	94-4496	8	Screw-PPH
15	136-6677	1	Globe-Quickstick, RH
16	136-6632-03	1	Plate-Stiffner
17	136-6678	1	Globe-Quickstick, LH
18	137-3056	3	Bolt-CARR
19	137-3094	3	Nut-Hex
20	139-9903	1	Cable-Release, Chute
21	138-0744	1	Washer-Friction, Composite

Traction Control Assembly

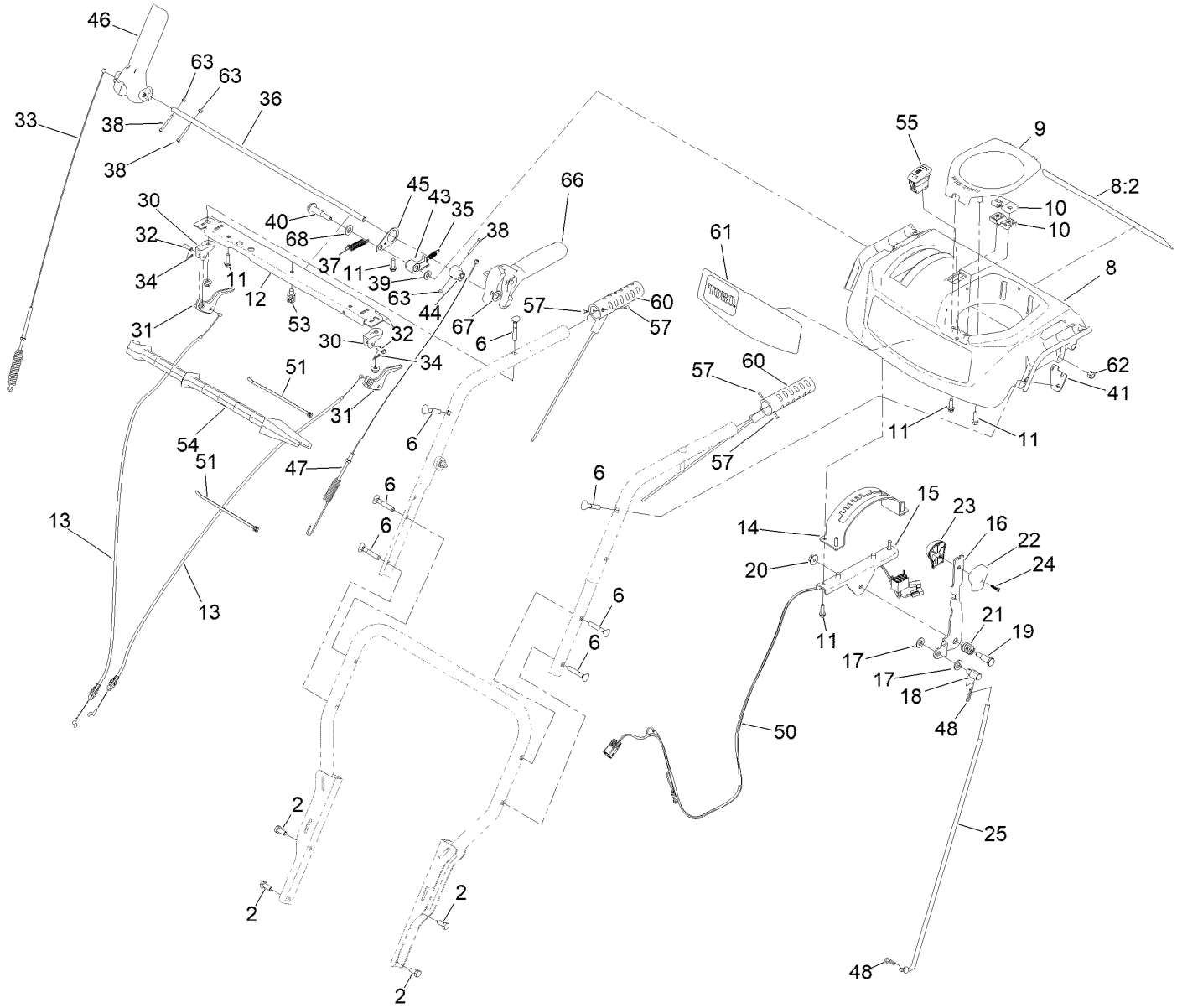

Traction Control Assembly (continued)

Ref.	Part Number	Qty.	Description
2	137-3052	4	Screw-HH
6	137-3107	2	Screw-Handle
8	145-0666	1	Panel-Control, Assembly
8:2	138-0650	1	Decal-Safety
9	137-6178	1	Cover-Quickstick
10	105-9987	2	Support-Rod
11	137-3099	8	Screw-Plastite, HWH
12	145-4075-01	1	Brace-Console
13	138-0726	2	Cable-Clutch
14	137-6187-03	1	Gate-Shift
15	137-6188-03	1	Bracket-Shift
16	137-6231-03	1	Selector-Speed
17	115-1166	2	Washer-Plain
18	136-7193	1	Trunnion-Rod
19	137-3103	1	Screw-Shoulder, HH
20	137-3038	1	Nut-HF
21	136-7121	1	Spring-Compression
22	105-9999	1	Knob-Shift, LH
23	106-4423	1	Knob-Shift, RH
24	94-4496	1	Screw-PPH
25	137-6225	1	Rod-Shift
30	105-9980	2	Mount-Lever, Clutch
31	106-4505	2	Lever-Clutch
32	1-808265	2	Pin-Clevis
33	138-3661	1	Cable-Auger
34	108-2992	2	Pin-Hair
35	136-7161	1	Spring-Lockout, Handle
36	144-1343	1	Rod-Lockout
37	136-7162	1	Spring-Return, Lever
38	145-0660	3	Screw-HSH,Spl
39	98-3499	1	Washer-Flat
40	145-0687	1	Screw-Shoulder
41	144-1345	1	Plate-Spring
43	144-1342	1	Latch, Lockout
44	144-1341	1	Cam-Lockout
45	145-0677-03	1	Bracket-Interlock
46	137-6171	1	Lever-Control
47	138-0728	1	Cable-Traction
48	137-3083	2	Pin-Hair
50	138-3644	1	Harness-Wire, LED And Hand Warmers
51	614249	2	Tie-Cable
53	32180-030	1	Clip-Tie
54	110-3408	1	Stick-Cleanout
55	122-1124	1	Switch-Rocker, On-None-Off (Heater)
57	3290-271	4	Rivet-Pop
60	144-1602	1	Red Heated Grip
61	138-0657	1	Decal-Console
62	137-3093	1	Nut-Hex
63	140-3749	3	Nut-Lock Rohs
66	144-1347	1	Lever-Control
67	3256-25	1	Washer-Flat
68	115-1166	1	Washer-Plain

Handle Assembly

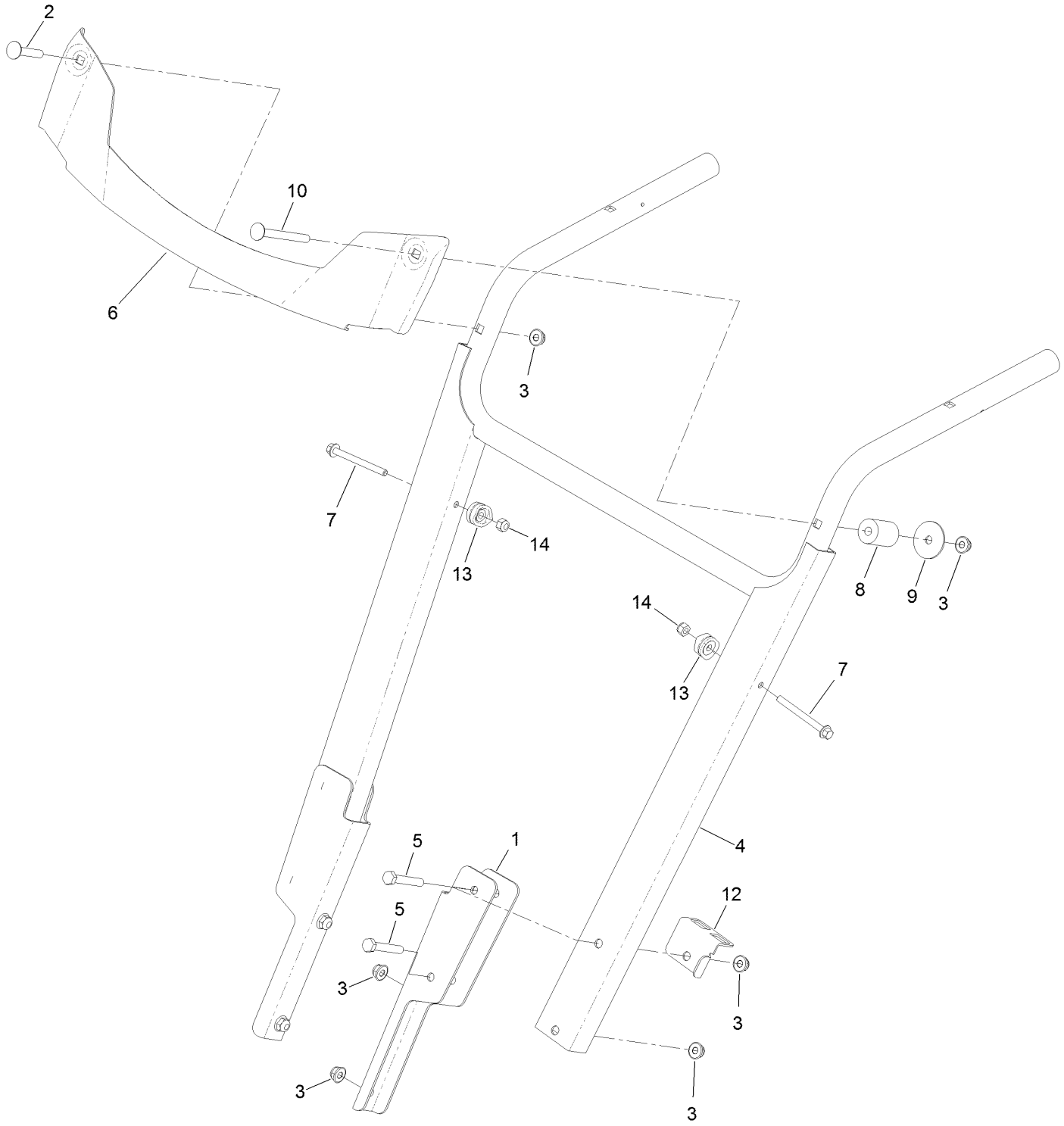

Handle Assembly (continued)

Ref.	Part Number	Qty.	Description
1	137-6221-03	2	Bracket-Handle, Lower
2	139-2625	1	Screw-CARR
3	138-8401	12	Nut-HF
4	137-6224-03	1	HD Handle ASM
5	120-9686	4	Screw-HH
6	137-6233-01	1	Trim-Metal, HD
7	138-3653	2	Screw-HHF
8	108-2301	1	Spacer
9	115-1151	1	Washer-Flat
10	138-0741	1	Screw-CARR
12	138-0724-03	1	Bracket-Stick, Cleanout
13	106-4509	2	Clamp-Cable
14	137-3094	2	Nut-Hex

Traction Drive Assembly

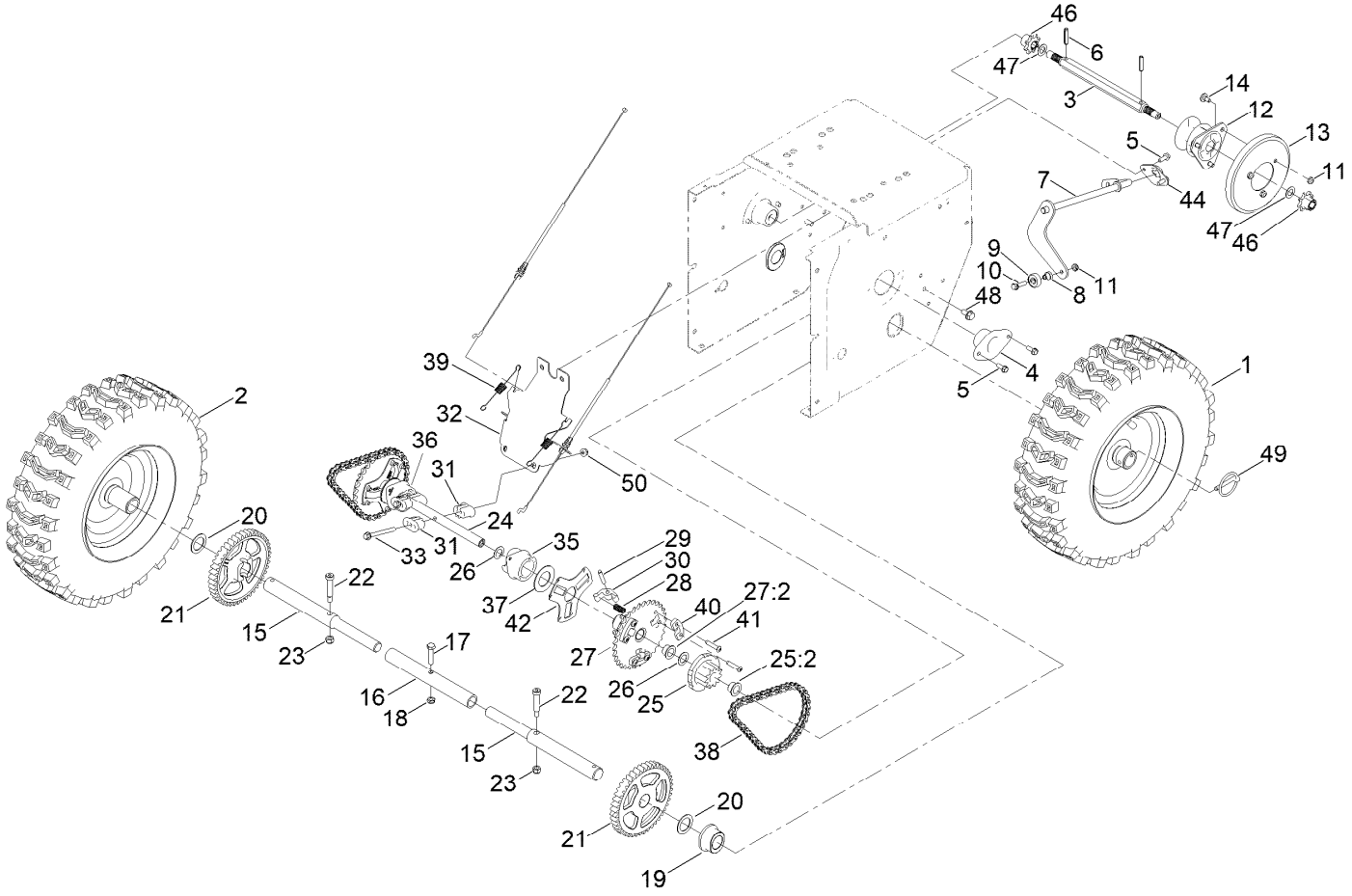

Traction Drive Assembly (continued)

Ref.	Part Number	Qty.	Description
1	136-6668	1	LH Wheel And Tire ASM
2	136-6667	1	RH Wheel And Tire ASM
3	125-1135	1	Shaft-Hex
4	108-7319	2	Retainer-Bearing
5	32144-85	6	Screw-HWH Thd Form
6	32121-9	2	Pin-Roll, Slotted
7	137-6162-03	1	Rod-Shift
8	119-7684	1	Spacer-Plate, Shift
9	121-6835	1	Bearing-Ball
10	32144-86	1	Screw-HWHTF
11	137-3091	4	Nut-Hex
12	119-7630	1	Trunnion
13	119-1567	1	Wheel-Friction
14	137-6246	3	Screw-Shoulder
15	136-6640	2	Axle
16	106-7259	1	Tube-Axle
17	137-3051	1	Screw-HH
18	137-3089	1	Nut-Hex
19	136-6641	2	Bushing-Axle
20	138-0725	2	Washer-Thrust
21	136-6642	2	Gear-Axle
22	138-0720	2	Bolt-Shoulder, HSH
23	137-3093	2	Nut-Hex
24	107-8883	1	Shaft-Intermediate
25	107-8894	2	11T Gear ASM
25:2	108-2973	2	Bushing-Flange
26	108-0015	4	Washer-Flat
27	107-8895	2	32T Sprocket ASM
27:2	108-2973	2	Bushing-Flange
28	107-8885	6	Spring-Compression
29	107-8899	6	Pin-Dowel
30	107-8879	6	Pawl-Clutch
31	107-8889	4	Guide-Collar
32	136-6648-03	1	Brace-Shift, Collar
33	138-3653	2	Screw-HHF
35	107-8887	1	Collar-Shift, LH
36	107-8888	1	Collar-Shift, RH
37	107-8891	2	Washer-Thrust
38	108-0016	2	Chain-Roller
39	107-8893	2	Spring-Extension
40	107-8880	6	Support-Pawl
41	137-3010	12	Screw-BHCS
42	136-7318	2	Retainer-Pawl, Pin
44	136-6647-03	1	Retainer-Rod, Shift
46	125-1134	2	Gear-Pinion, 8 Tooth
47	36-4780	2	Washer-Plain
48	32144-14	2	Screw-HWHTF
49	138-3642	2	Pin-Klik
50	119-4040	2	Nut-HF, NI

Attachments and Accessories

For 38844 Power Max Commercial 1432 OHXE Snowthrower

Product Name	Model/Part
Heavy-Duty Skid Kit	125-1104
Heated Grip Kit	131-6460
Kit-Cab	139-1640
Non-Marking Skid Kit	38211
Tire Chain Kit, 16in Tires	38215
Toro Snow Oil 0W30 Synthetic 20-Ounce Bottle	38913
Power Max HD Covers (2019)	490-7415

Notes:

Notes:

Notes:

TORO®

Count on it.