FORM NO. 3312-313 Rev. A

TORO®

MODEL NO. 20570-4000001
THRU 5000001 & UP

PARTS CATALOG

21" H.P. REAR BAGGER

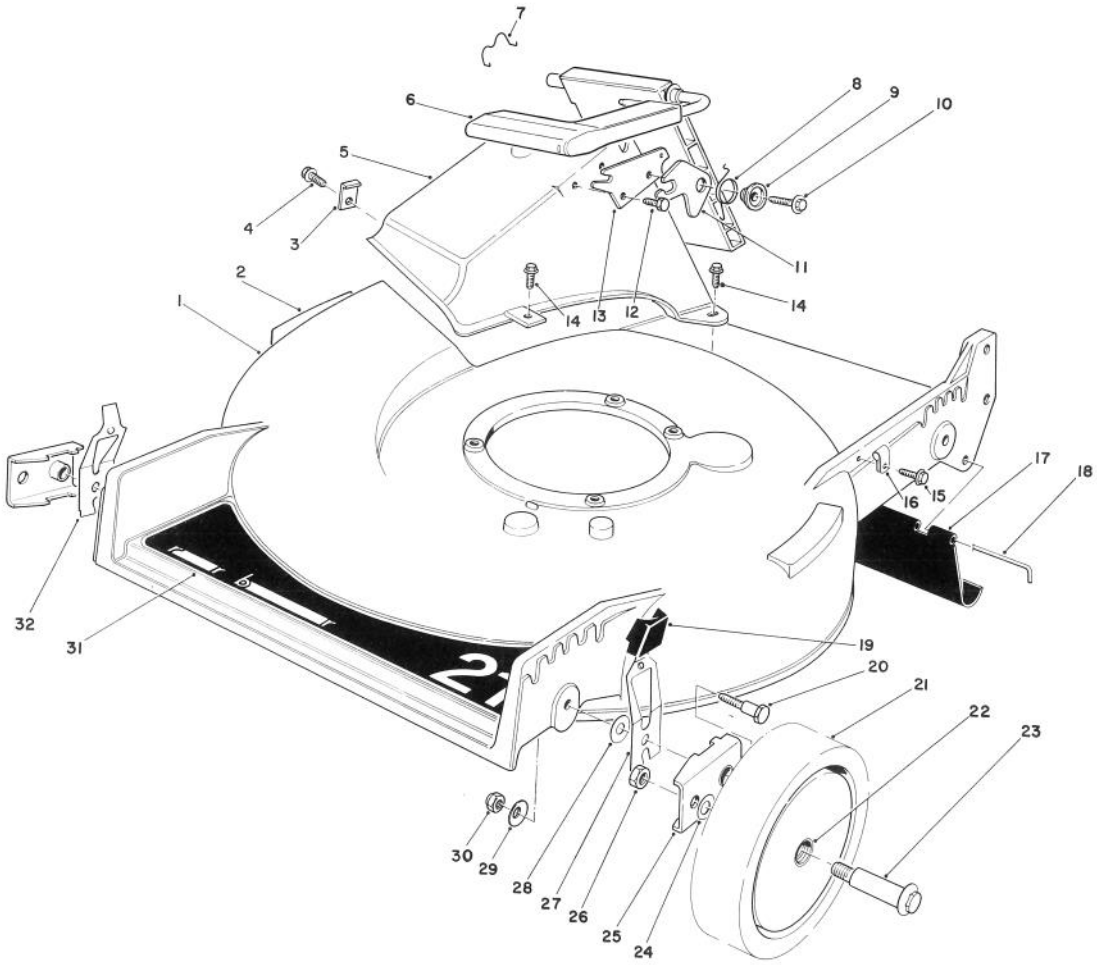

HOUSING ASSEMBLY

Ref. No.	Part No.	Description	No. Used
1	11-4069	Housing (Incl. Ref. #2)	1
2	39-5770	Decal — Danger	1
3	47-6540	Clip — Tunnel	1
4	12-3270	Screw Thread Forming Hex Washer Hd.	1
5	46-3500	Tunnel — Discharge	1
6	51-0200	Discharge Door Assembly	1
7	47-5840	Retainer — Door	1
8	33-4860	Spring — Torsion	1
9	43-4840	Spacer — Door Latch	1
10	46-8091	Screw — Tapping	1
11	42-4010	Latch — Door	1
12	46-8090	Screw — Tapping	1
13	23-1040	Plate — Latch	1
14	46-6811	Capscrew — Hex Hd.	3
15	12-5450	Screw — Tapping	1
16	2412-83	Clamp	1

Ref. No.	Part No.	Description	No. Used
17	44-0580	Rear Shield	1
18	33-3208	Rod — Shield	1
19	25-7740	Knob — Arm	4
20	44-5270	Screw — Pivot	4
21	11-9509	Wheel & Tire Assembly (Incl. Ref. #22)	1
22	27-6250	Bushing	8
23	27-6231	Wheel Bolt	4
24	40-1940	Washer — Wheel Bolt	4
25	47-2940	Pivot Arm Assembly	4
26	3296-6	Locknut	4
27	52-7480	Spring Arm Assembly L.H.	2
28	5-4460	Washer — Pivot	4
29	3290-456	Washer — Bellville	4
30	3296-29	Locknut	4
31	44-0450	Decal — Rear Bagger	1
32	52-7490	Spring Arm Assembly R.H.	2

PRICE $1.00

© The Toro Company — 1984, Rev. 1985

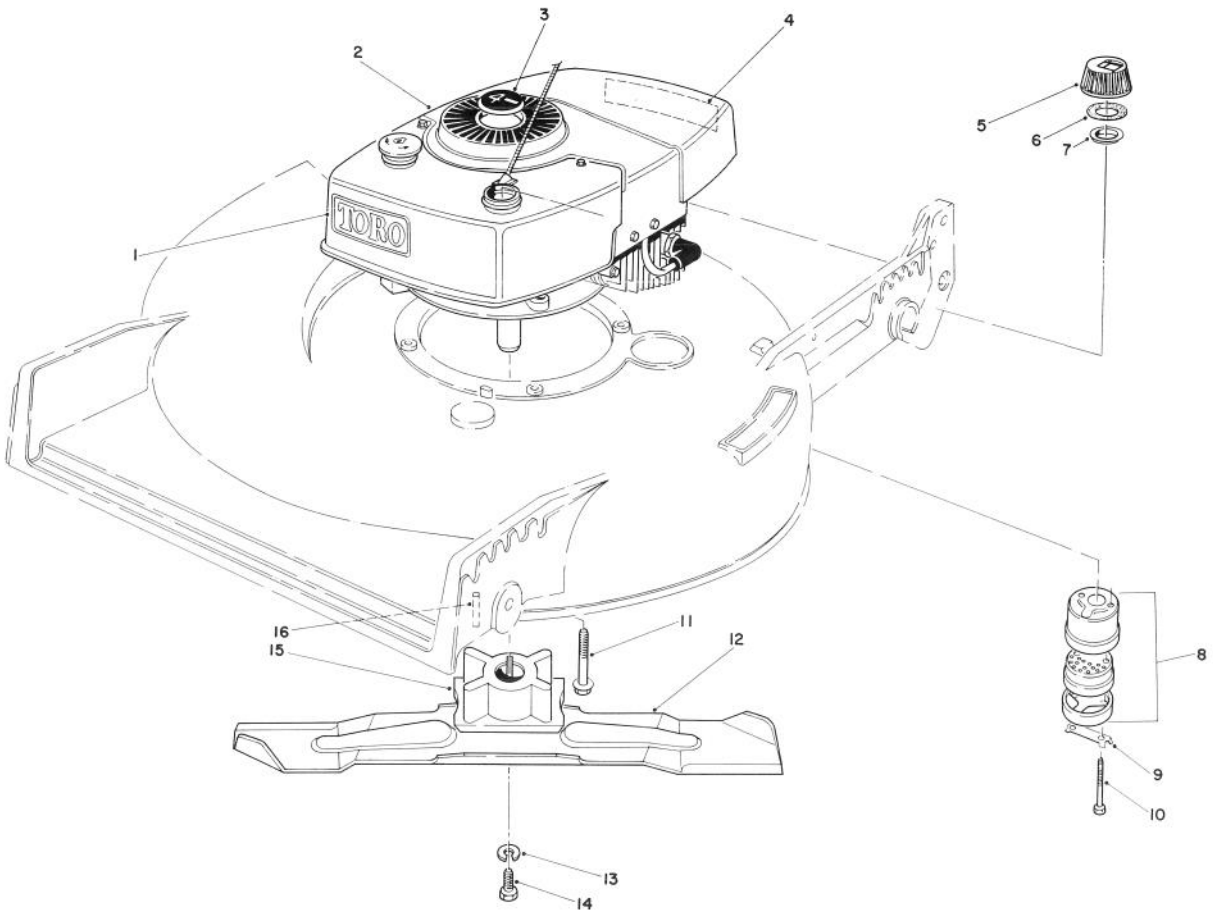

ENGINE ASSEMBLY

Ref. No.	Part No.	Description	No. Used
1	44-0510	Decal — Toro	1
2	221-731	Engine	1
3	38-1480	Plug Button	1
4	46-7580	Decal — Maintenance	1
5	42-0682	Fuel Cap Assembly (Incl. Ref. #6 & 7)	1
6	2210-144	Gasket	1
7	2210-143	Baffle	1
8	5-4769	Muffler Assembly (Incl. Ref. # 9 & 10)	1

Ref. No.	Part No.	Description	No. Used
9	3-5094	Clip — Locking	1
10	321-20	Screw — Cap Hex. Hd.	2
11	11-0581	Screw — Thread Forming	3
12	42-1000	Blade — 21"	1
13	3253-22	Lockwasher	1
14	26-0670	Blade Screw	1
15	46-3490	Blade — Retainer	1
16	7-0036	Key — Square	1
*	39-5930	Spark Arrestor Muffler (Optional) (Incl. Ref. #9 & 10)	1

*Not Illustrated

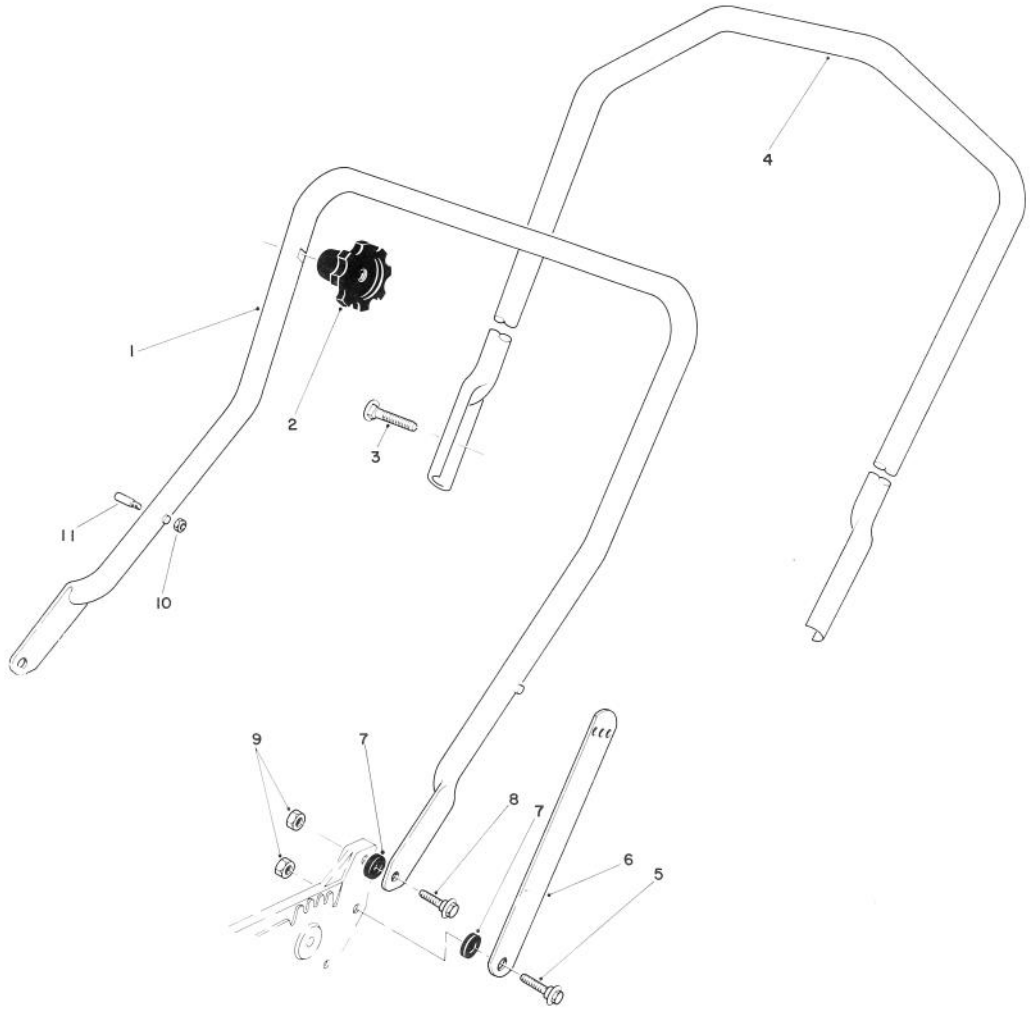

HANDLE ASSEMBLY

Ref. No.	Part No.	Description	No. Used
1	43-1360	Lower Handle Assembly	1
2	19-4050	Knob — Handle Release	2
3	17-9421	Handle Screw	2
4	46-5411	Upper Handle	1
5	27-7210	Shoulder Screw	2
6	43-1370	Handle Latch	2

Ref. No.	Part No.	Description	No. Used
7	3-3287	Space — Handle Latch	4
8	27-7211	Shoulder Screw	2
9	3296-29	Nut — Lock	4
10†	3296-47	Nut — Lock	2
11†	49-2750	Pin — Handle	2

†Service Replacement Parts

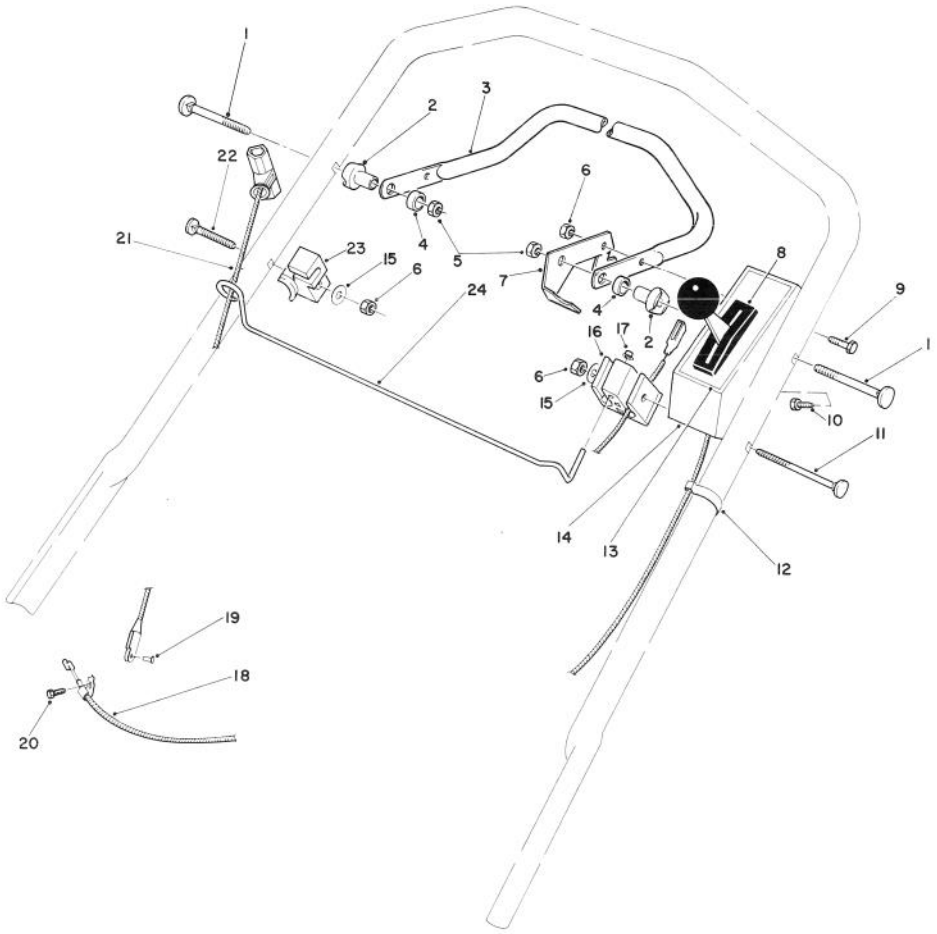

CONTROL ASSEMBLY

Ref. No.	Part No.	Description	No. Used
1	17-9421	Handle Screw	2
2	49-1630	Support — Spacer	2
3	52-7430	Control Bar	1
4	256-276	Spacer — Nylon	2
5	3296-58	Nut — Lock	2
6	3296-42	Locknut	3
7	46-7950	Lever — Control	1
8	46-6010	Control — Throttle Bend Type 1 Sheath Lg. 48" Wire Lg. 2"	1
9	321-3	Capscrew	1
10	32104-76	Screw — Tapping	2
11	46-6434	Handle Screw	1

Ref. No.	Part No.	Description	No. Used
12	218-465	Clip — Cable	2
13	46-8070	Decal — Control Cover	1
14	11-6769	Panel — Control (Incl. Ref. #13)	1
15	3256-22	Washer	2
16	46-6980	Support — Cable	1
17	3290-337	Push Nut	1
18	46-8011	Cable — Brake	1
19	2210-251	Rivet	1
20	2210-250	Screw — Hex Cap Hd.	1
21	46-8891	Rope — Starter	1
22	46-6430	Screw — Handle	1
23	46-7960	Catch — Rod	1
24	46-7970	Rod — Rope	1

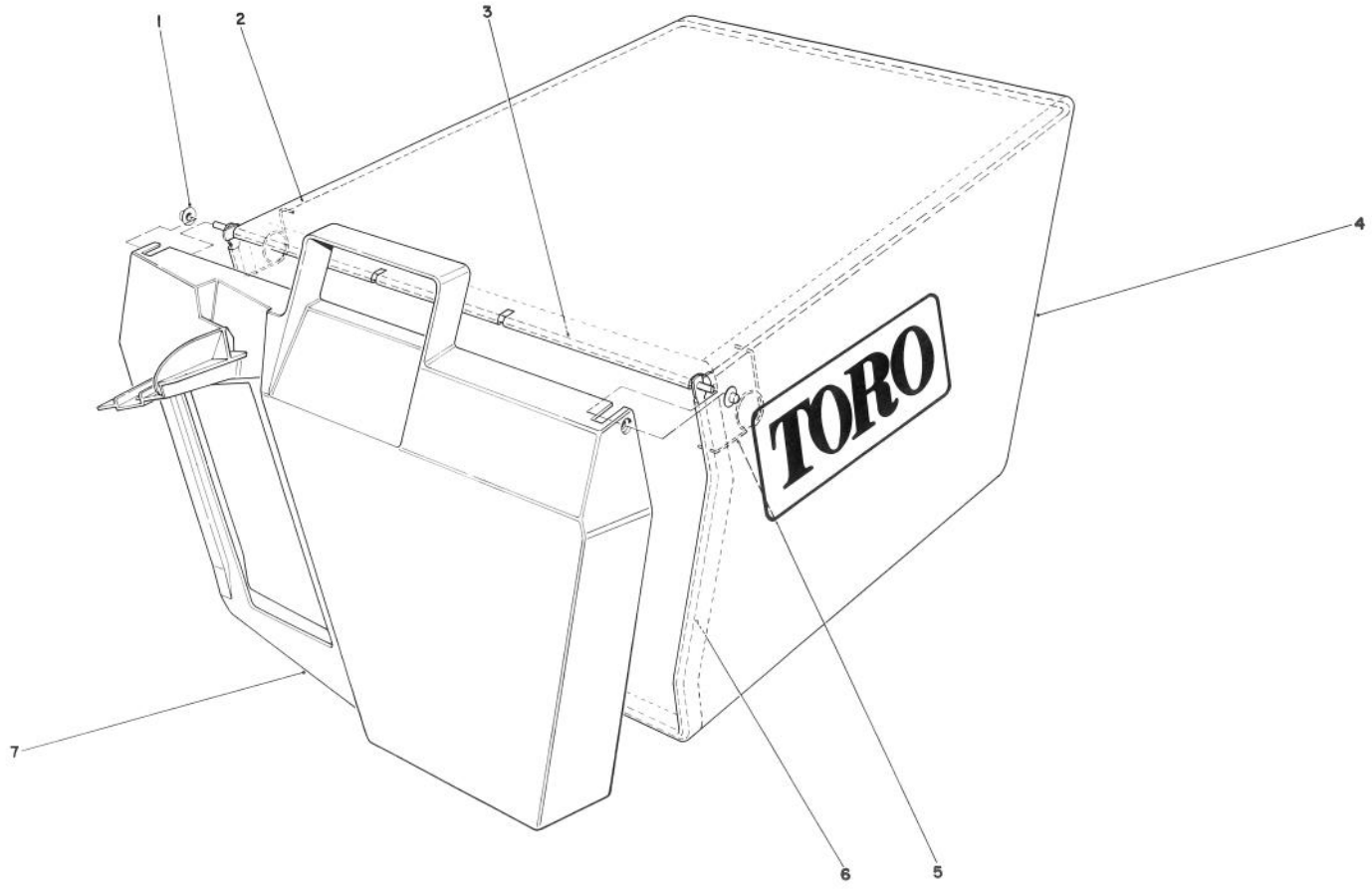

GRASS BAG ASSEMBLY NO. 11-0159

Ref. No.	Part No.	Description	No. Used
1	3290-422	Push Nut	2
2	42-4030	Bag Frame Upper	1
3	33-4820	Hinge Bag Door	1
4	8-2759	Grass Bag	1

Ref. No.	Part No.	Description	No. Used
5	36-6910	Spring	2
6	43-0030	Frame Bag	1
7	36-1331	Door Grass Bag	1

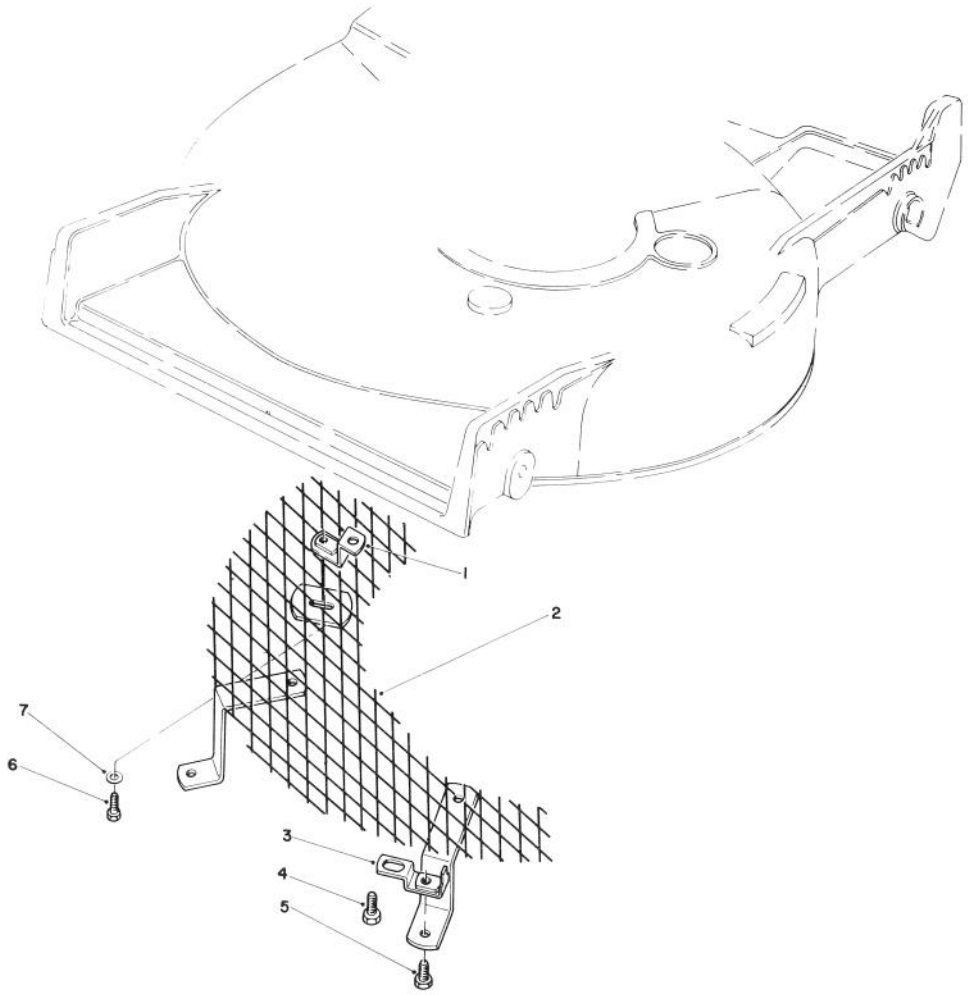

LEAF SHREDDER KIT MODEL NO. 59157 (Optional)

Ref. No.	Part No.	Description	No. Used
1	47-6260	Bracket	1
2	47-6230	Screen	1
3	46-4880	Mounting Bracket	2
4	32144-11	Screw — Self Tapping	3

Ref. No.	Part No.	Description	Ref. No.
5	321-3	Capscrew, Hex Hd.	2
6	321-5	Capscrew, Hex Hd.	1
7	3256-1	Washer	1

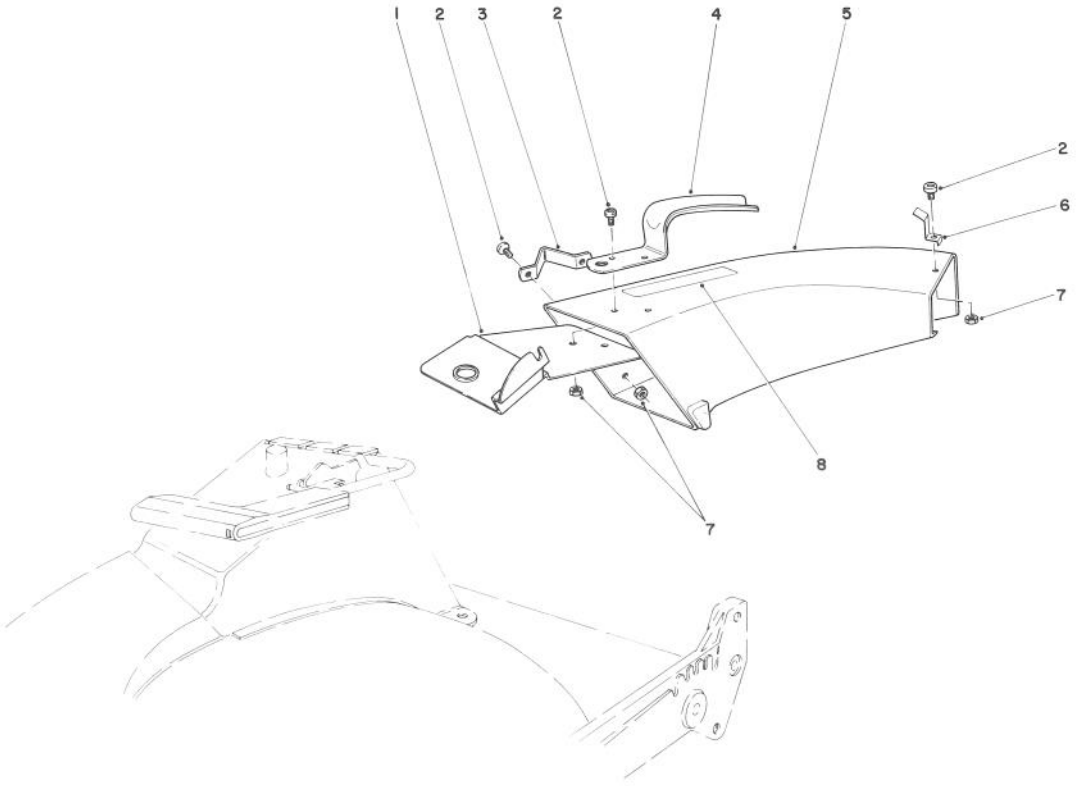

SIDE DISCHARGE CHUTE MODEL NO. 59108 (Optional)

Ref. No.	Part No.	Description	No. Used
1	44-2330	Plate — Discharge Chute	1
2	3251-3	Screw	5
3	46-6580	Bracket — Side	1
4	42-1340	Handle — Grass Chute	1
5	11-7149	Chute — Discharge (Incl. Ref. #8)	1

Ref. No.	Part No.	Description	No. Used
6	49-2630	Clip — Cable Stop	1
7	3296-12	Locknut	5
8	39-9120	Decal — Caution	1

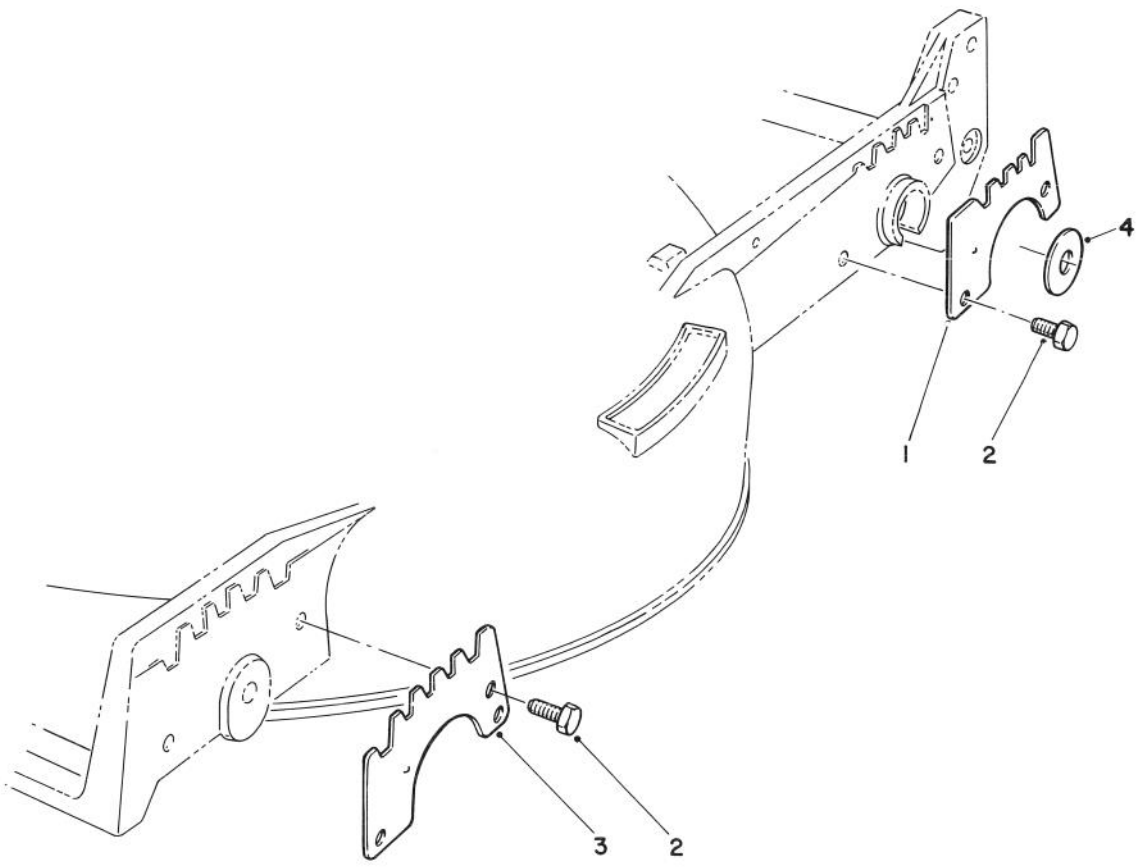

WEAR PLATE KIT NO. 49-4080 (Optional)

Ref. No.	Part No.	Description	No. Used
1	49-4070	Plate — Wear, Rear	2
2	32104-17	Screw — Thread Forming	8

Ref. No.	Part No.	Description	No. Used
3	43-5050	Plate — Wear, Front	2
4	33-0390	Washer	2

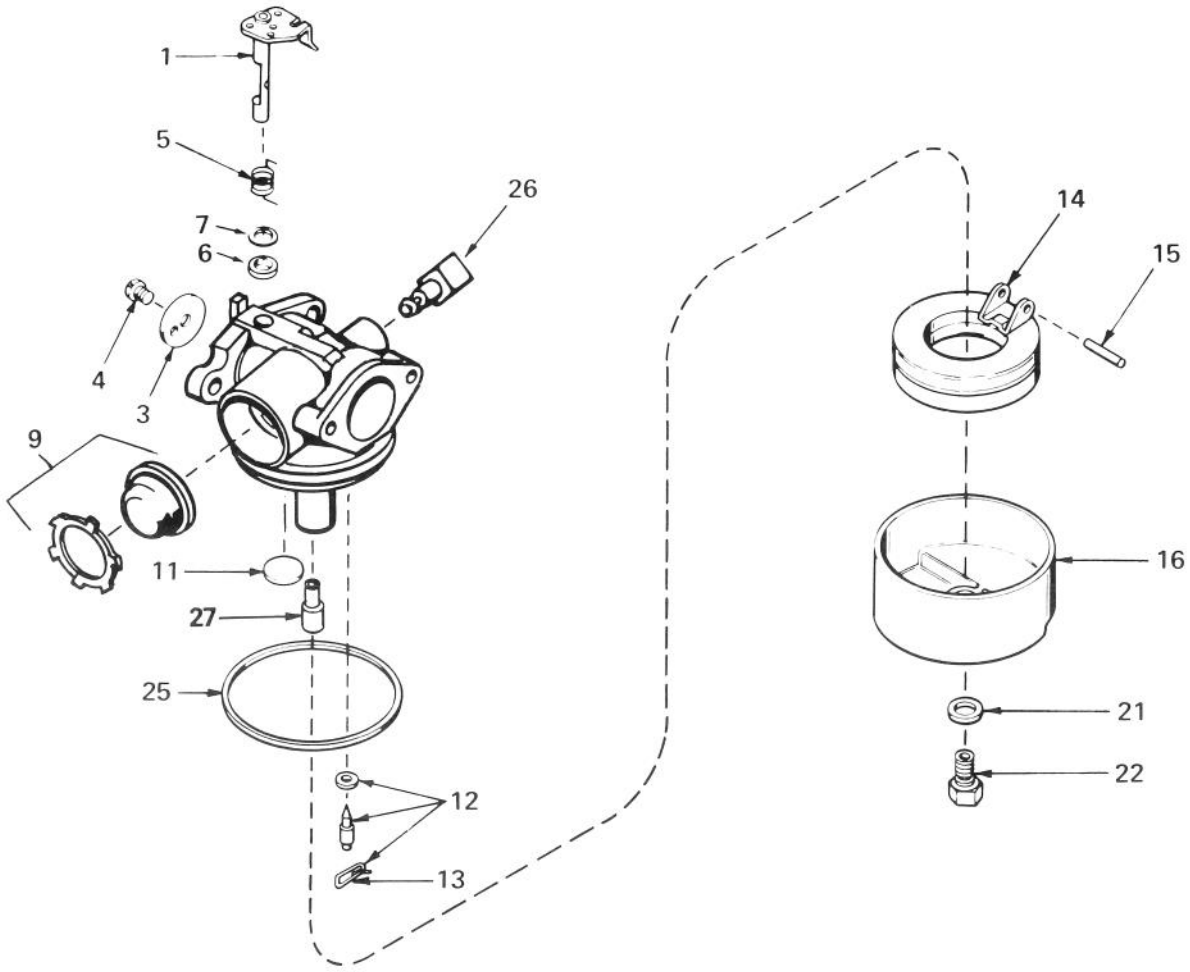

CARBURETOR ASSEMBLY NO. 632050A

Ref. No.	Part No.	Description	No. Used
1	631615	Shaft & Lever Assy., Throttle	1
3	631616	Shutter, Throttle	1
4	650506	Screw, Throttle Shutter	1
5	631767	Spring, Return	1
6	631971	Seal, Dust	1
7	631184	Washer, Flat	1
9	632047	Bulb & Retainer, Primer	1
11	631027	Plug, Welch	1
12	631021	Inlet Needle, Seat & Clip Assy. (Incl. #13)	1

Ref. No.	Part No.	Description	No. Used
13	631022	Clip, Inlet Needle	1
14	632019	Float, Carburetor	1
15	631024	Shaft, Float	1
16	631700	Bowl, Float	1
21	631334	Gasket, Bowl-to-body	1
22	631935	Nut, Float Bowl	1
25	631028	Gasket, Bowl-to-body	1
26	631807	Fitting, Fuel Inlet	1
27	632158	Spacer	1

ENGINE TECUMSEH MODEL TNT100-10085E

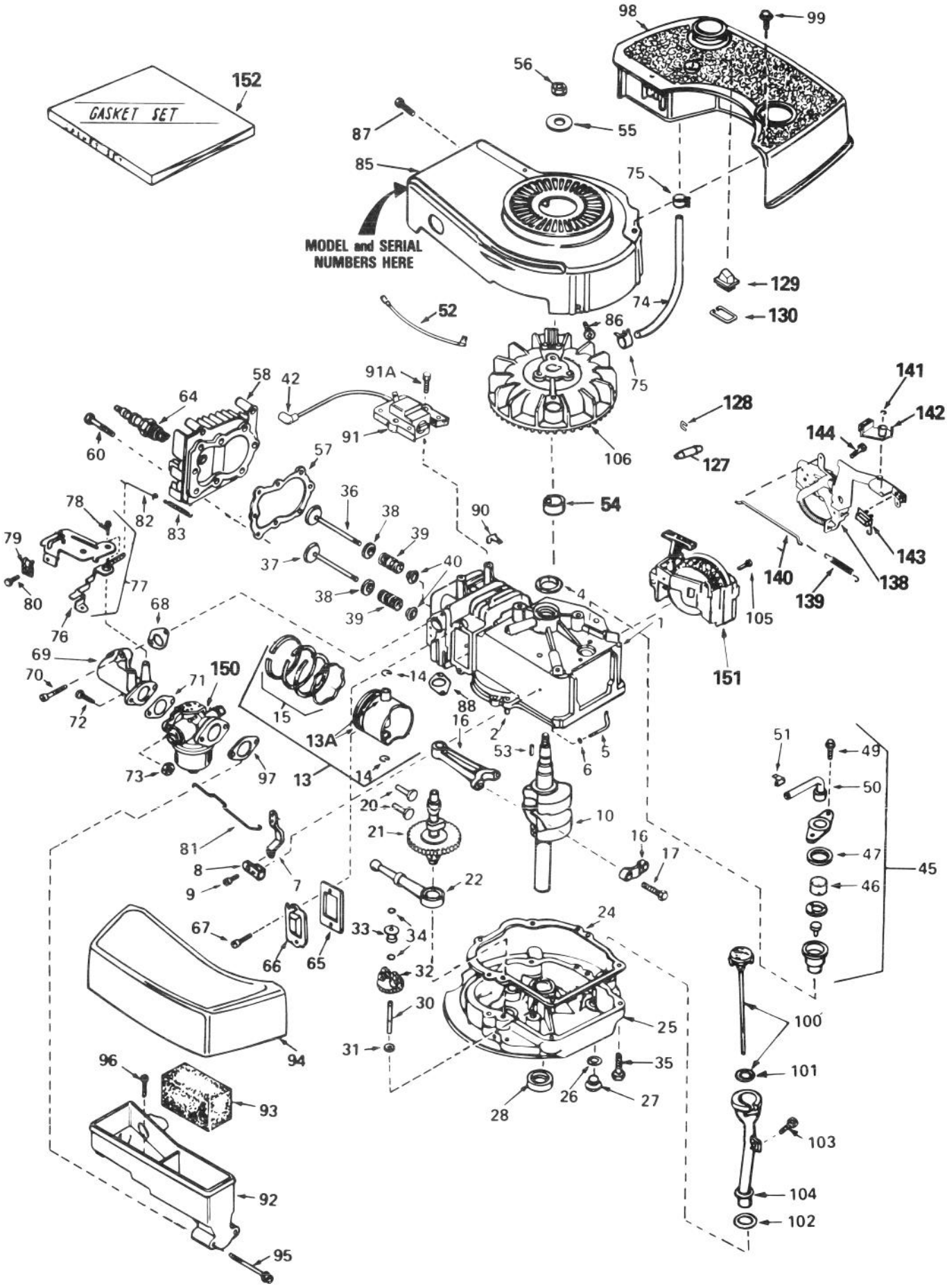

ENGINE TECUMSEH MODEL TNT100-10085E

Ref. No.	Part No.	Description	No. Used
1	34429A	Cylinder Assy. (Inc. #2&4)	1
2	26727	Pin, Dowel	2
4	32600	Seal, Oil	1
5	30589	Rod, Governor (Incl. #6)	1
6	28277	Washer, Flat	1
7	32651	Lever, Governor	1
8	31335	Clamp, Governor Lever	1
9	650548	Screw, Hex Washer Hd.	1
10	34440	Crankshaft	1
13	34851	Piston, Pin & Ring Assy. (Std.) (Incl. #13A, 14 & 15)	1
13	34852	Piston, Pin & Ring Assy. (.010 oversize) (Incl. #13A, 14 & 15)	1
13	34853	Piston, Pin & Ring Assy. (.020 oversize) (Incl. #13A, 14 & 15)	1
13A	32603B	Piston & Pin Assy. (Std.) (Inc. #14)	1
13A	32604B	Piston & Pin Assy. (.010 oversize) (Incl. #14)	1
13A	32605B	Piston & Pin Assy. (.020 oversize) (Inc. #14)	1
14	20381	Ring, Piston Pin Retaining	2
15	34854	Ring Set, Piston (Std.)	1
15	34855	Ring Set, Piston (.010 oversize)	1
15	34856	Ring Set, Piston (.020 oversize)	1
16	30963B	Rod Assy., Connecting (Incl. #17)	1
17	32610A	Bolt, Connecting Rod	2
20	27241	Lifter, Valve	2
21	33553	Camshaft (Mech. Compression Release)	1
22	29914	Pump Assy., Oil	1
24	*26750A	Gasket, Mounting Flange	1
25	30594B	Flange Assy., Mounting (Incl. #26 thru 30)	1
26	*28833	Gasket, Oil Drain Plug	1
27	27244	Plug, Oil Drain	1
28	26208	Seal, Oil	1
30	30574	Shaft, Mechanical Governor	1
31	30590A	Washer, Flat	1
32	30591	Gear Assy., Governor (Incl. #31)	1
33	30588A	Spool, Governor	1
34	29193	Ring, Retaining	2
35	650488	Screw, Hex Hd.	6
36	29314B	Valve, Intake (Std.) (Incl. #40)	1
36	29315C	Valve, Intake (1/32" oversize) (Incl. #40)	1
37	29313C	Valve, Exhaust (Std.) (Incl. #40)	1
37	29315C	Valve, Exhaust (1/32" oversize (Incl. #40)	1
38	31671	Cap, Upper Valve Spring	2
39	31672	Spring, Valve	2
40	31673	Cap, Lower Valve Spring	2
42	610118	Cover, Spark Plug	1
45	34214A	Breather Assy. (Incl. #46 thru 51)	1
46	33734	Element, Breather	1
47	*33735	Gasket, Breather	1
49	30200	Screw, Hex Washer Hd. Self-tap	2
50	33886	Tube, Breather	1
51	33887	Clip, Breather Tube	1
52	34961	Wire, Ground	1
53	611004	Key, Flywheel (Solid State)	1
54	34080	Spacer, Flywheel Key	1
55	650815	Washer, Belleville	1
56	650816	Nut, Flywheel	1

Ref. No.	Part No.	Description	No. Used
57	*33015	Gasket, Cylinder Head	1
58	34342	Head, Cylinder	1
60	6021A	Screw, Hex Flange Hd.	8
64	33636	Plug, Spark (Champion J-8 or equivalent) *Except for Canada*	1
64	34251 Canada	Resistor Spark Plug (Canadian Regulations require RJ-17LM resistor spark plug)	1
65	*27234	Gasket, Valve Spring Cover	1
66	32755	Cover, Valve Spring Box	1
67	650128	Screw, Fil. Hd.	2
68	*34690	Gasket, Intake Pipe	1
69	33004A	Pipe, Intake (Incl. #68)	1
70	650451	Screw, Hex Hd.	2
71	*31688	Gasket, Carburetor	1
72	6201	Screw, Hex Hd.	2
73	29752	Nut & Lockwasher Assy.	2
74	34682	Line, Fuel	1
75	26460	Clamp, Fuel Line	2
76	34310	Lever, Control	1
77	33889A	Control Assy., Speed (Incl. #76&78)	1
78	650804	Screw, Hex Washer Hd. Shoulder Self-tap	1
79	27793	Clip, Conduit	1
80	28942	Screw, Hex Washer Hd.	1
81	34336	Link, Governor-to-throttle	1
82	33151	Link, Governor Spring	1
83	33890	Spring, Governor	1
85	33891B	Housing, Blower	1
86	650561	Screw, Hex Washer Hd. Durlok	2
87	30200	Screw, Hex Washer Hd. Self-tap	2
88	*30081	Gasket, Exhaust	1
90	29443	Clip, Fuel Line	2
91	34443A	Lamination & Coil Assy. (Solid State) (Incl. #42)	1
91A	650814	Screw, Hex Hd.	2
92	33895	Body, Air Cleaner	1
93	33896	Filter, Air Cleaner	1
94	33897	Cover, Air Cleaner	1
95	650762	Screw, Fil. Hd.	2
96	650784	Screw, Hex Hd. Taptite w/flatwasher	1
97	*33051	Gasket, Air Cleaner	1
98	35028	Tank, Fuel	1
99	28763	Screw, Hex Washer Hd.	2
100	33894A	Dipstick, Oil (Incl. #101)	1
101	33590	"O" Ring	1
102	34265	Gasket, Fill Tube	1
103	650562	Screw, Hex Washer Hd.	1
104	34380	Tube, Oil Fill	1
105	650802	Screw, Hex Washer Hd. Taptite	2
106	611046	Flywheel	1
127	35026	Coupling, Starter Rope	1
128	35025	Staple, Rope Retainer (Strip of 25 Pieces)	1
129	34983	Pulley Assy., Starter	1
130	34984	Retainer, Pulley	1
138	35015	Bracket Assy.	1
139	34965	Spring, Extension	1
140	34966	Link, Control	1
141	32309	Ring, Retaining	1
142	34968	Lever, Brake	1
143	610973	Terminal Assy.	1
144	650837	Screw, Hex Hd. E.T.	1
150	632050A	Carburetor (Incl. #71)	1
151	590532	Starter, Sidemount rewind	1
152	33906A	Gasket Set	1

*Indicates parts included in Gasket Set, Ref. No. 152.

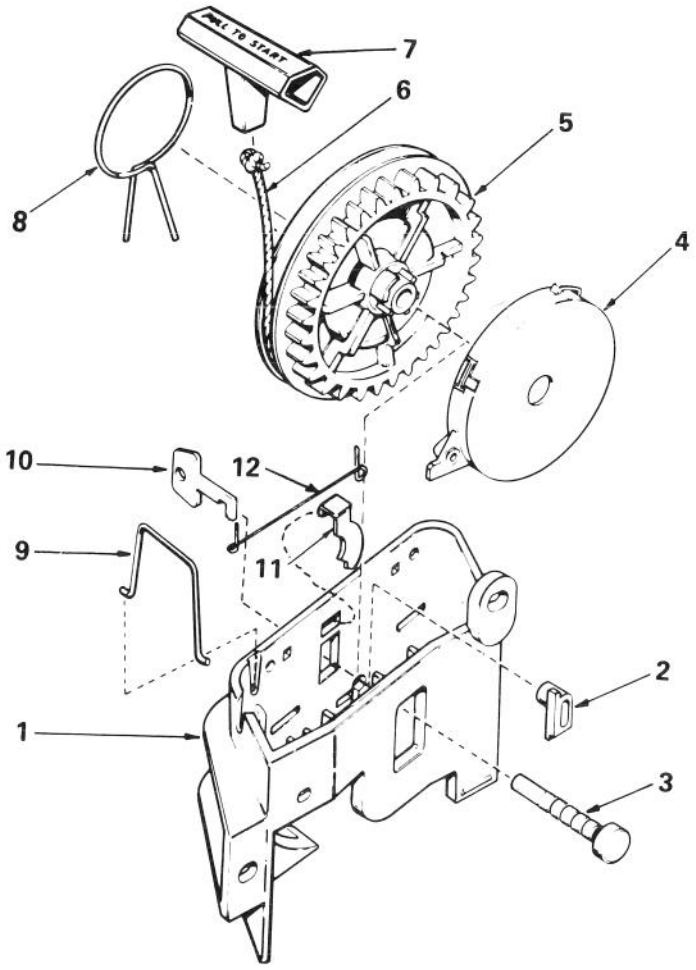

STARTER ASSEMBLY NO. 590532

Ref. No.	Part No.	Description	No. Used
1	590523	Bracket, Starter	1
2	590524	Pawl, Locking (Not used on all engine models)	1
3	590525	Pin, Pulley	1
4	590526	Spring Assy., Rewind (Incl. #3)	1
5	590522	Pulley, Starter	1
6	590535	Rope, Starter (Length 95" & 9/64" Dia.)	1

Ref. No.	Part No.	Description	No. Used
7	590452	Handle, Starter	1
8	590554	Spring, Brake	1
9	590529	Clip, Rope	1
10	590530	Key (Not used on all engine models)	1
11	590533	Pawl, Starter	1
12	590534	Spring, Pawl	1