Form No. 3350-114

Greensmaster® 3150

Traction Unit

Model No. 04357—230000801 and Up

Parts Catalog

Ordering Replacement Parts

To order replacement parts, please supply: the part number, the quantity, and the description of each part desired.

Understanding Reference Numbers

Each identified part in an illustration has a reference number. The reference number for a part also appears in the parts list, along with other information about the part.

This catalog uses two special reference number formats, one to indicate parts in a service assembly and another to indicate the quantity of a given part in an illustration.

Service Assembly Reference Numbers

Parts in service assemblies have reference numbers in the form **a:b.** The **a** represents the reference number of the entire service assembly and the **b** represents a sequential number unique to each part within the service assembly.

For example, a wheel assembly might be identified by reference number **6**, the tire by **6:1**, the valve by **6:2**, and the wheel by **6:3**. When you order the assembly identified by reference number 6, you receive all parts identified by reference numbers 6:1, 6:2, and 6:3. However, you may also order any part individually.

Reference numbers of this type appear in illustrations and in part lists.

Reference Numbers Indicating Quantity

In an illustration, if a reference number indicates more than one part, the reference number has the form **nX y.** The **n** represents the quantity of the part, the **X** is the multiplication symbol, and the **y** represents the reference number.

For example, in an illustration, the reference number **2X 37** means that two of the parts identified by reference number 37 are indicated.

© The TORO Company — 2003
All Rights Reserved

Contents

Description	Page
Brake Pedal Assembly	4
Traction Pedal Assembly	5
Front Wheel and Brake Assembly	6
Brake Assembly No. 104–7705	7
Hydraulic Wheel Motor Assembly No. 92–9199	8
Steering Arm Assembly	9
Steering Control Valve Assembly No. 105–0424	10
Right Hand Pull Frame Assembly	11
Hydraulic Cylinder Assembly No. 105–3822	13
Left Hand Pull Frame Assembly	14
Center Pull Frame Assembly	16
Hydraulic Cylinder Assembly No. 105–3823	18
Seat Assembly	19
Neutral System Assembly	20
Engine Installation Assembly	21
Hydrostat and Gear Pump Drive Assembly	22
Hydrostat Assembly No. 105–0494	23
Gear Pump Assembly No. 104–7737	24
Frame and Battery Assembly	25
Rear Wheel Assembly	26
Steering Cylinder Assembly No. 105–0411	27
Control Panel Assembly	28
Hydraulic Reservoir and Leak Detector Assembly	29
Fuel Tank Assembly	30
Speed Selector Lever Assembly	31
Joystick and Console Assembly	32
Joystick Bracket Assembly	33
Hydraulic Manifold Assembly	34
Manifold Assembly No. 106–9005	35
Hydraulic Traction Assembly	36
Hydraulic Reel Drive Assembly	37
Reel Motor Assembly No. 100–6426	38
Hydraulic Lift Assembly	39
Hydraulic Steering Assembly	40
Wire Harness Routing Assembly	41
Hydraulic Schematic	42
Electrical Schematic	43
Cylinder Assembly Briggs and Stratton Model 350447–1331–E1	44
Crankshaft Assembly Briggs and Stratton Model 350447–1331–E1	45
Cylinder Head Assembly Briggs and Stratton Model 350447–1331–E1	46
Cylinder Head Assembly Briggs and Stratton Model 350447–1331–E1	47
Intake Manifold and Rocker Cover Assembly Briggs and Stratton Model 350447–1331–E1	48
Carburetor Assembly Briggs and Stratton Model 350447–1331–E1	49
Governor Assembly Briggs and Stratton Model 350447–1331–E1	50
Alternator Assembly Briggs and Stratton Model 350447–1331–E1	51
Fuel Pump, Oil Pump and Dipstick Assembly Briggs and Stratton Model 350447–1331–E1	52
Air Cleaner Assembly Briggs and Stratton Model 350447–1331–E1	53
Blower Housing Assembly Briggs and Stratton Model 350447–1331–E1	54
Flywheel Assembly Briggs and Stratton Model 350447–1331–E1	55
Starter Assembly Briggs and Stratton Model 350447–1331–E1	56
Starter Assembly Briggs and Stratton Model 350447–1331–E1	57
Gasket Assembly Briggs and Stratton Model 350447–1331–E1	58
Carburetor Overhaul Kit Assembly Briggs and Stratton Model 350447–1331–E1	59

Part Description Abbreviations

Part descriptions in this catalog may include the following abbreviations.

Abbreviation	Meaning
AR	as required
ASM	assembly
CARR	carriage
DEG	degrees
FH	flat head
GA	gauge
HF	hex flange
HH	hex head
HHF	hex head flange
HLH	hex lag head
HJ	hex jam
HOC	height-of-cut
HS	hex socket
HSBH	hex socket button head
HSFH	hex socket flat head
HSH	hex socket head
HWH	hex washer head
HWHTF	hex washer head thread forming
HYD	hydraulic
INC	incorporated
LH	left hand
NI	nylon insert
PPH	Phillips pan head
PTH	Phillips truss head
PTO	power take off
RH	right hand
SFH	slotted fillister head
SHH	slotted hex head
SQH	square head
SHWH	slotted hex washer head
SPH	slotted pan head
SRH	slotted round head
STD	standard
TAP	self tapping
TTH	Torx truss head
WH	wing head

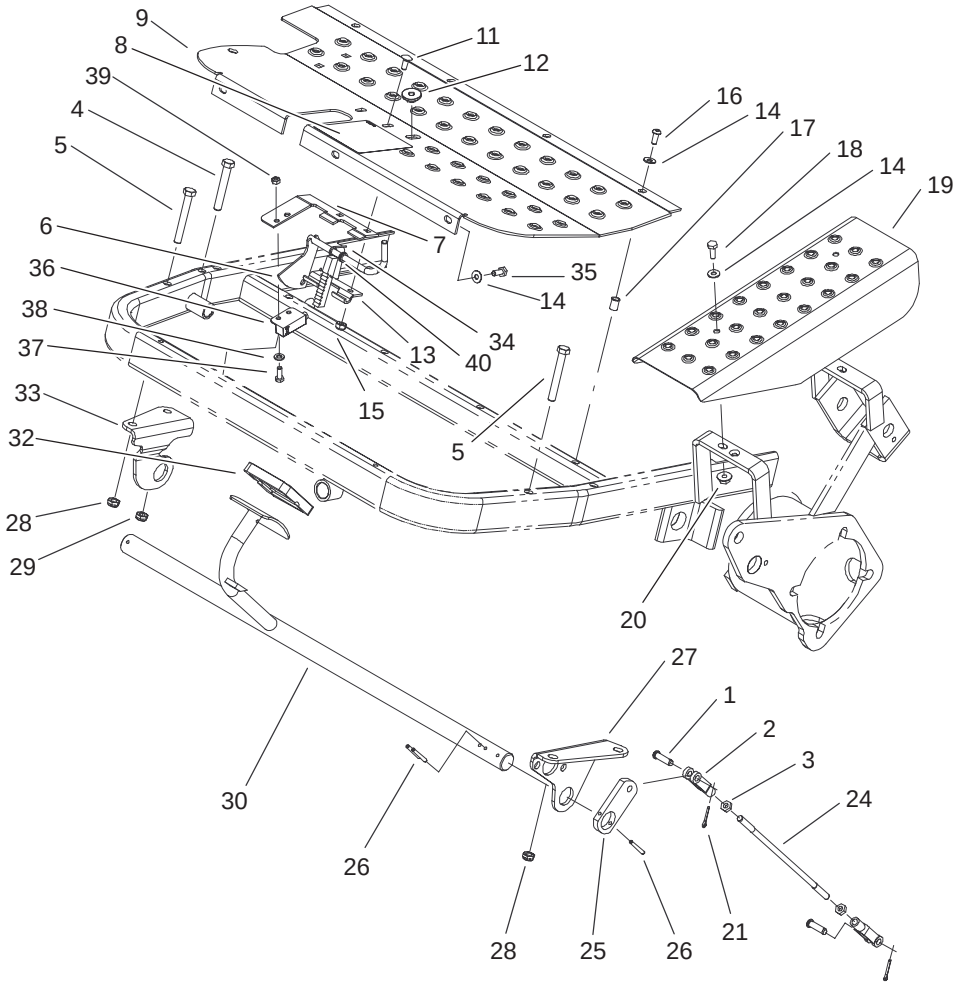

Sheet No.: 2

Brake Pedal Assembly

Ref. No.	Part No.	Qty.	Description
1	283–61	4	Pin–Yoke
2	282–2	4	Yoke
3	3220–2	4	Nut
4	323–12	1	Screw–HH
5	323–13	3	Screw–HH
6	100–9819	1	Latch ASM
7	100–9821	1	Plate–Switch, Reed
8	93–8062	1	Decal–Brake, Parking
9	105–0463–01	1	Plate–Footrest
11	3229–11	2	Screw–CARR
12	32141–111	1	Nut–Adjusting
13	95–1629	1	Hinge–Lower
14	3256–1	9	Washer–Flat
15	3296–16	2	Nut–Lock, NI
16	3274–31	4	Screw–HSBH
17	32148–6	7	Insert–Nut
18	321–4	2	Screw–HH
19	83–0200–01	1	Plate–Cover, LH
20	32128–33	2	Nut–HF
21	3272–6	4	Pin–Cotter
24	27–2270	2	Rod–Adjustment, Brake
25	10–8100–01	2	Strap–Shaft, Brake
26	32121–35	4	Pin–Roll
27	88–9640–01	1	Bracket–Lift Pivot, LH
28	104–8301	3	Nut–Flange, NI

Ref. No.	Part No.	Qty.	Description
29	3296–59	1	Nut–Lock, NI
30	83–0160	1	Shaft–Brake
32	93–7629	1	Pad–Foot, Brake
33	105–0440–01	1	Bracket–Brake, RH
34	10–8140	1	Spring–Latch, Brake
35	321–3	3	Screw–HH
36	104–2057	1	Sensor
37	48–7620	2	Screw–HH
38	33093–00	2	Washer–Flat
39	49–7810	2	Nut–Lock
40	75–5470	2	Spacer–Bearing

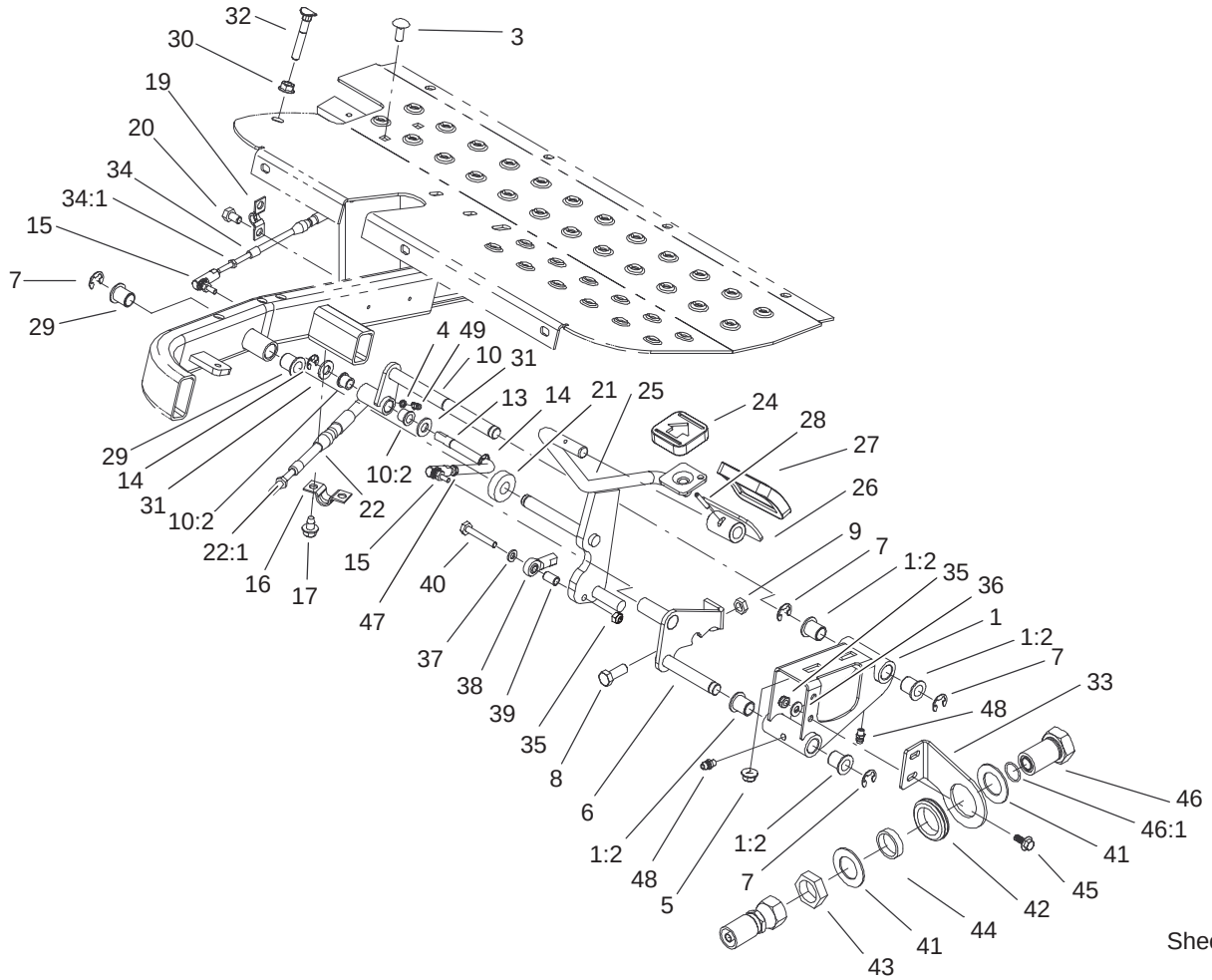

Sheet No.: 3

Traction Pedal Assembly

Ref. No.	Part No.	Qty.	Description
1	106–4620	1	Pivot Mount ASM
1:2	256–155	4	Bushing–Flange
3	3230–1	2	Bolt–CARR
4	3254–8	1	Washer–Lock
5	104–8300	2	Nut–Flange, NI
6	105–5425	1	Lock–ASM
7	32120–47	4	Ring–Retaining, External
8	323–6	1	Screw–HH
9	3217–7	1	Nut–Hex
10	106–4621	1	Support ASM
10:2	256–116	2	Bushing–Flange
13	105–5430	1	Rod–Connecting
14	32120–18	2	E–Ring
15	2411–38	2	Joint–Ball
16	93–2092	1	Clamp–Cable
17	9266934	2	Screw
19	93–2279	1	Clamp–Cable
20	322–1	2	Screw–HH
21	105–5429	1	Spacer–Pedal, Traction
22	105–5445	1	Cable–Traction
22:1	3220–1	2	Nut–Jam
24	74–9110	1	Pad–Pedal, Reverse
25	105–5421–01	1	Traction Pedal ASM
26	49–6440–03	1	Pedal–Forward

Ref. No.	Part No.	Qty.	Description
27	74–9100	1	Pad–Pedal, Forward
28	32121–45	1	Pin–Spring
29	256–155	2	Bushing–Flange
30	32128–20	1	Nut–HF
31	3256–24	2	Washer–Flat
32	17–9426	1	Screw–Handle
33	105–8290–01	1	Bracket–Bulkhead, Front
34	105–5444	1	Cable–Lock, Neutral
34:1	3219–14	2	Nut–Hex
35	3296–56	3	Nut–Lock, NI
36	3256–22	2	Washer–Flat
37	105–8318	1	Washer–Flat
38	2411–41	1	Joint–Ball
39	80–0650	1	Spacer–Tubular
40	321–10	1	Screw–HH
41	69–9010	2	Washer
42	240–3	1	Grommet–Rubber
43	340–74	1	Locknut–Bulkhead
44	69–9000	1	Spacer
45	99–6810	2	Screw–HH
46	105–5491	1	Tube–HYD
46:1	237–58	1	O–Ring
47	3219–14	1	Nut–Hex
48	302–5	2	Fitting–Grease
49	302–60	1	Fitting–Grease

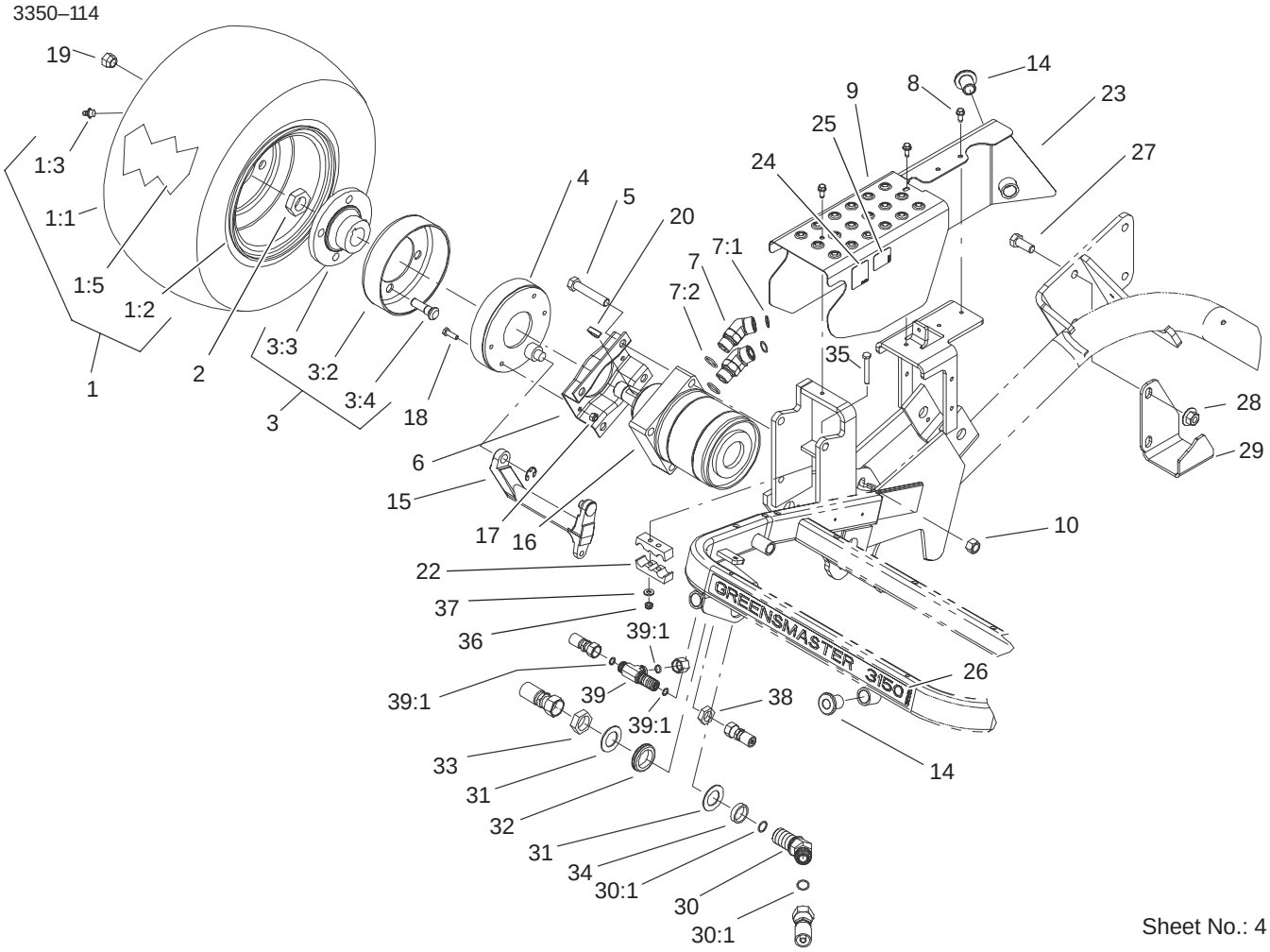

Sheet No.: 4

Front Wheel and Brake Assembly

Ref. No.	Part No.	Qty.	Description
☆1		2	Wheel And Tire ASM
1:1	28–3680	1	Tire
1:2	217–60	1	Rim
1:3	232–27	1	Stem–Valve
1:5	232–37	1	Tube
2	26–3790	2	Nut–Lock
3	10–6821	2	Brake Drum ASM
3:2	10–6850	1	Drum–Brake
3:3	10–6870–03	1	Hub–Wheel
3:4	85–6540	4	Stud–Drive
4	104–7705	2	Brake ASM
5	325–11	8	Screw–HH
6	84–2000–03	2	Bracket–Brake
7	340–14	4	Fitting–HYD, 45°
7:1	237–65	1	O–Ring
7:2	237–80	1	O–Ring
8	32144–10	4	Screw–HWH
9	105–0433–01	1	Channel–Step, RH
10	3296–23	8	Nut–Lock, NI
14	83–1700	3	Bushing–Flange
15	93–2096	2	Lever–Brake
16	92–9199	2	Motor–Wheel, HYD
17	3296–42	8	Nut–Lock, NI
18	321–5	8	Screw–HH
19	242–50	8	Nut–Lug
20	3257–42	2	Key–Woodruff

Ref. No.	Part No.	Qty.	Description
*21	3290–378	3	Tie–Cable
22	93–2509	2	Clamp–Tube
23	105–8282–01	1	Side Shield ASM
24	105–4674	1	Decal–Noise, Ce
25	93–7252	1	Decal
26	105–5470	1	Decal
27	325–5	2	Screw–HH
28	32128–52	2	Locknut–Flange
29	105–8263–01	1	Bracket–Rops
30	340–73	1	Fitting–45, Bulkhead Union
30:1	237–65	2	O–Ring
31	69–9010	2	Washer
32	240–3	1	Grommet–Rubber
33	340–74	1	Locknut–Bulkhead
34	69–9000	1	Spacer
35	321–11	2	Screw–HH
36	3296–56	2	Nut–Lock, NI
37	3256–22	2	Washer–Flat
38	340–70	1	Nut–Lock
39	340–68	1	Fitting–Tee, Bulkhead
39:1	237–22	3	O–Ring

☆ Not serviced separately
* Not illustrated

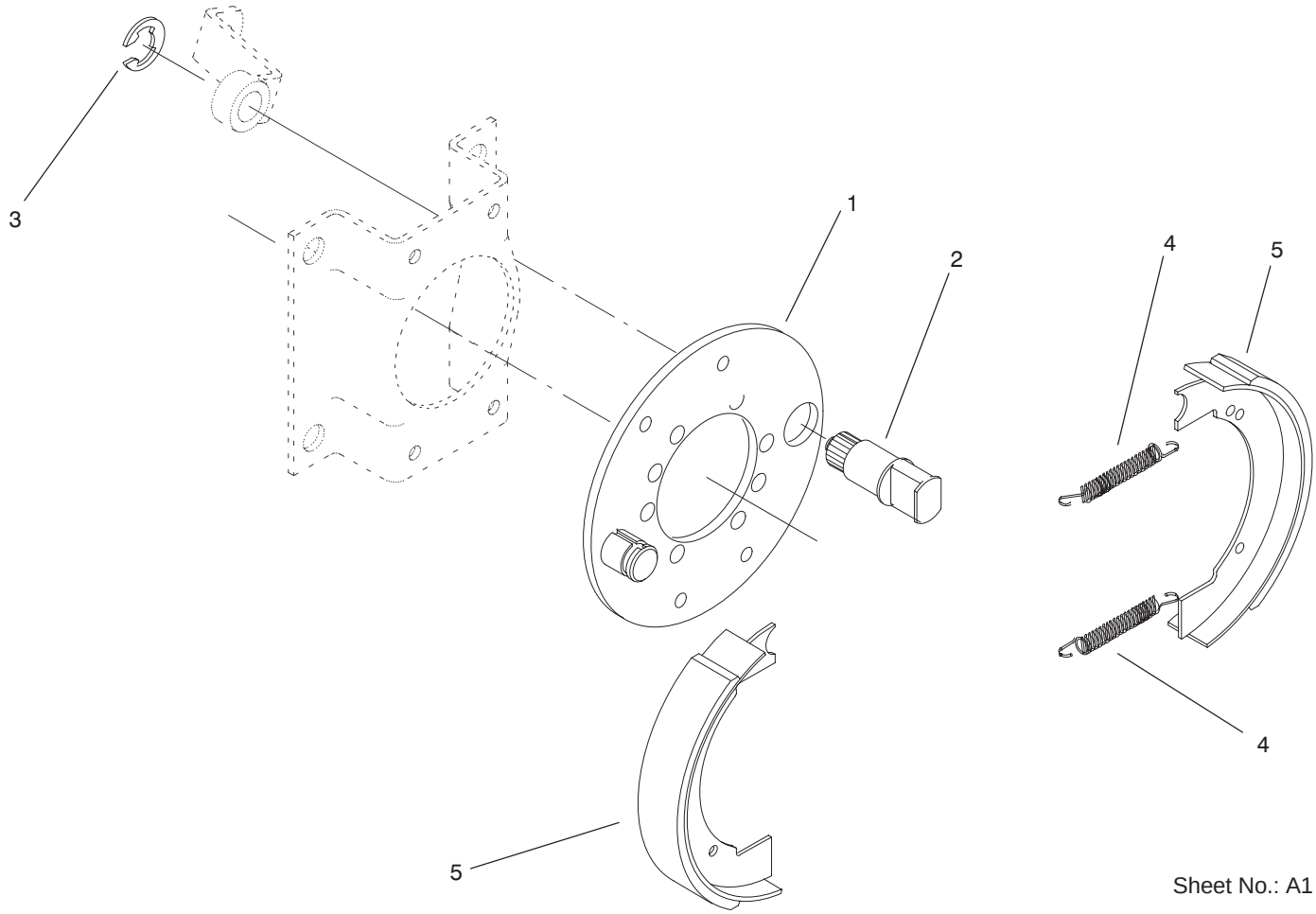

Sheet No.: A1

Brake Assembly No. 104–7705

Ref. No.	Part No.	Qty.	Description
1	70–9870	1	Plate–Backing
2	104–7707	1	Shaft–Cam, Brake
3	104–7706	1	E Ring–Bowed
4	70–9880	2	Spring–Return
5	70–9840	2	Shoe–Brake

Ref. No.	Part No.	Qty.	Description

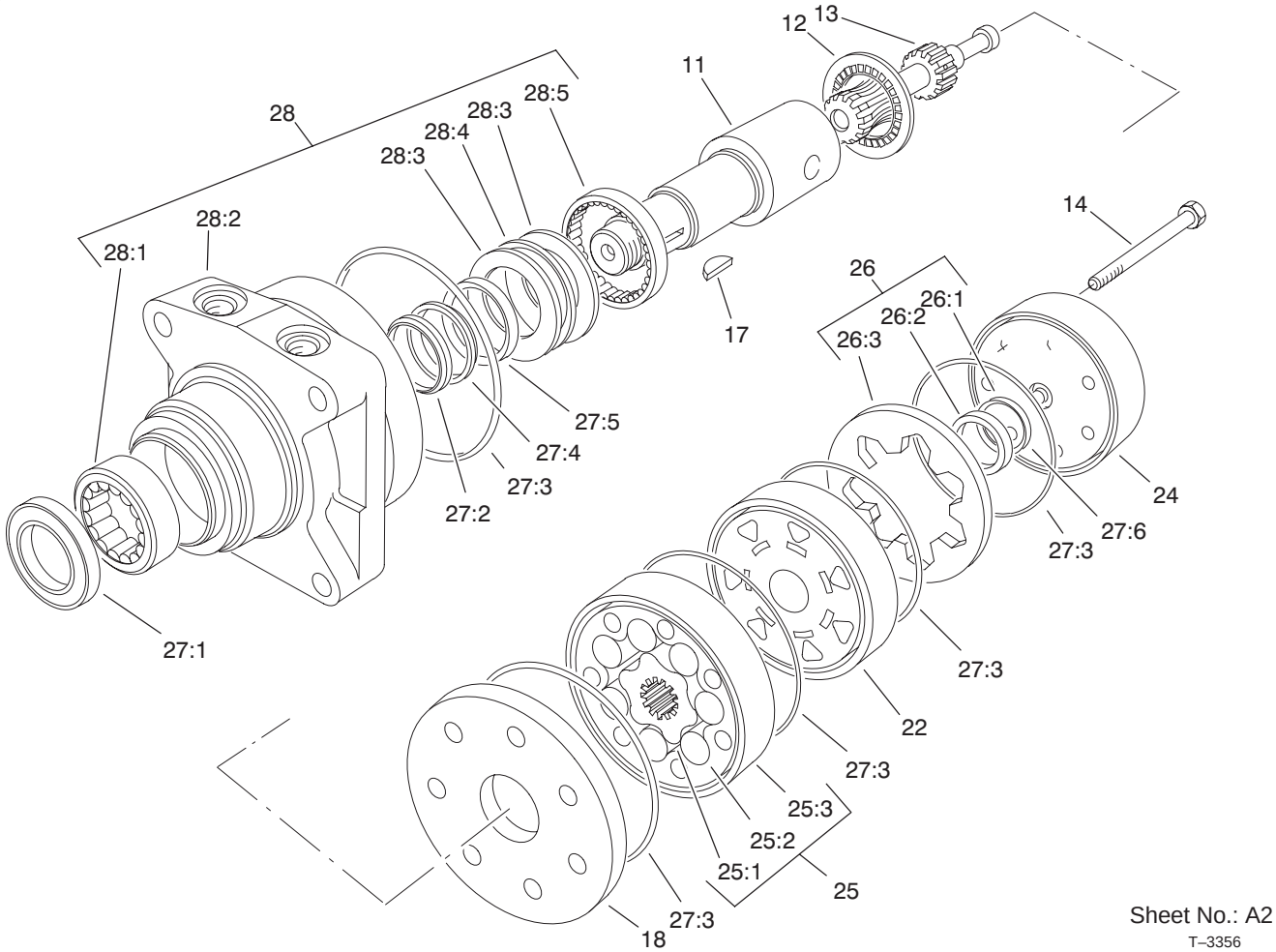

Hydraulic Wheel Motor Assembly No. 92–9199

Ref. No.	Part No.	Qty.	Description
11	76–0860	1	Shaft–Coupling
12	76–0850	1	Bearing–Thrust
13	92–9761	1	Link–Drive
14	92–9762	7	Screw–HH
17	3257–42	1	Key–Woodruff
18	76–0870	1	Plate–Wear
22	76–0840	1	Manifold
24	76–0940	1	End Cover ASM
25	92–9763	1	Rotor Set
☆25:1		1	Rotor
☆25:2		1	Vane
☆25:3		1	Stator
26	76–0880	1	Commutator ASM
☆26:1		1	Seal–Commutator
☆26:2		1	Commutator
☆26:3		1	Ring–Commutator
27	94–8178	1	Seal Kit
☆27:1		1	Seal–Dirt And Water
☆27:2		1	Washer–Backup
☆27:3		5	Seal–Ring
☆27:4		1	Washer–Backup
☆27:5		1	Seal–Inner
☆27:6		1	Seal–Commutator
28	76–0810	1	Housing ASM
☆28:1		1	Bearing
☆28:2		1	Housing

Ref. No.	Part No.	Qty.	Description
☆28:3		2	Washer–Thrust
☆28:4		1	Bearing–Thrust
☆28:5		1	Bearing

☆ Not serviced separately

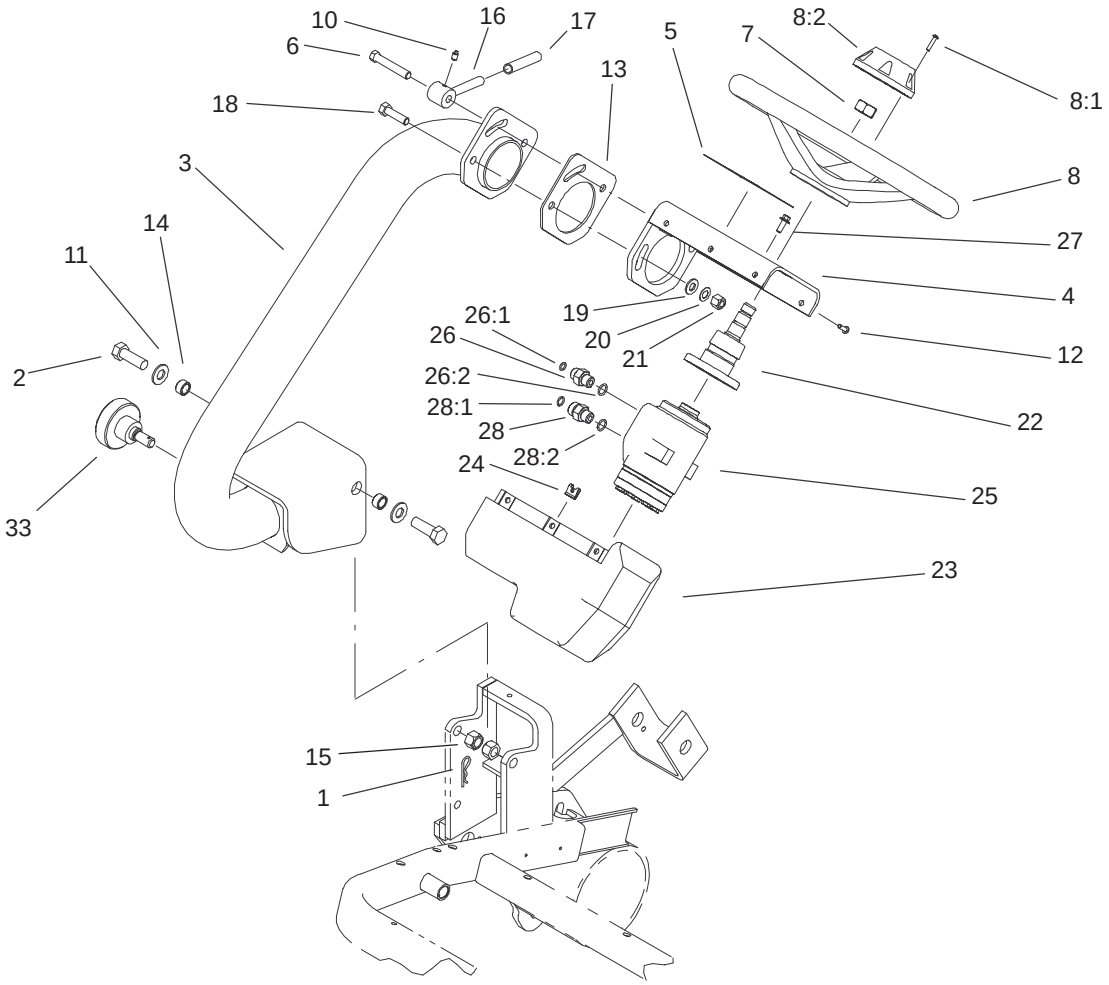

Sheet No.: 5

Steering Arm Assembly

Ref. No.	Part No.	Qty.	Description
1	3290–467	1	Pin–Hair
2	325–6	2	Screw–HH
3	105–0418–01	1	Steering Arm ASM
4	105–4316–03	1	Steering Mount ASM
5	93–8063	1	Decal–Caution, Ce
5	104–2053	1	Decal–Warning
6	105–4326	1	Screw–HH, LH
7	94–9952	1	Nut–Hex
8	75–0560	1	Wheel–Steering
8:1	32144–21	1	Screw
8:2	68–5140	1	Cap–Wheel, Steering
10	3241–1	1	Screw–Set, SQH
11	3256–26	2	Washer–Flat
12	3274–39	6	Screw–HSBH
13	105–0457	1	Plate–Friction
14	47–2890	2	Bushing
15	3296–23	2	Nut–Lock, NI
16	105–4313	1	Lever ASM
17	92–6798	1	Cap–Rod, Tilt
18	323–29	2	Screw–HH
19	3256–24	2	Washer–Flat
20	3290–477	2	Washer–Curved
21	3296–39	2	Nut–Lock, NI
22	105–0425	1	Steering Column ASM
23	83–0810	1	Cover–Steering
24	3290–277	6	Nut–Speed

Ref. No.	Part No.	Qty.	Description
25	105–0424	1	Valve–Control, Steering
26	340–1	3	Adapter
26:1	237–35	1	O–Ring
26:2	237–42	1	O–Ring
27	33103–016	4	Screw–HHF
28	340–2	2	Fitting–HYD, Straight
28:1	237–22	1	O–Ring
28:2	237–42	1	O–Ring
33	105–0484	1	Knob–Steering

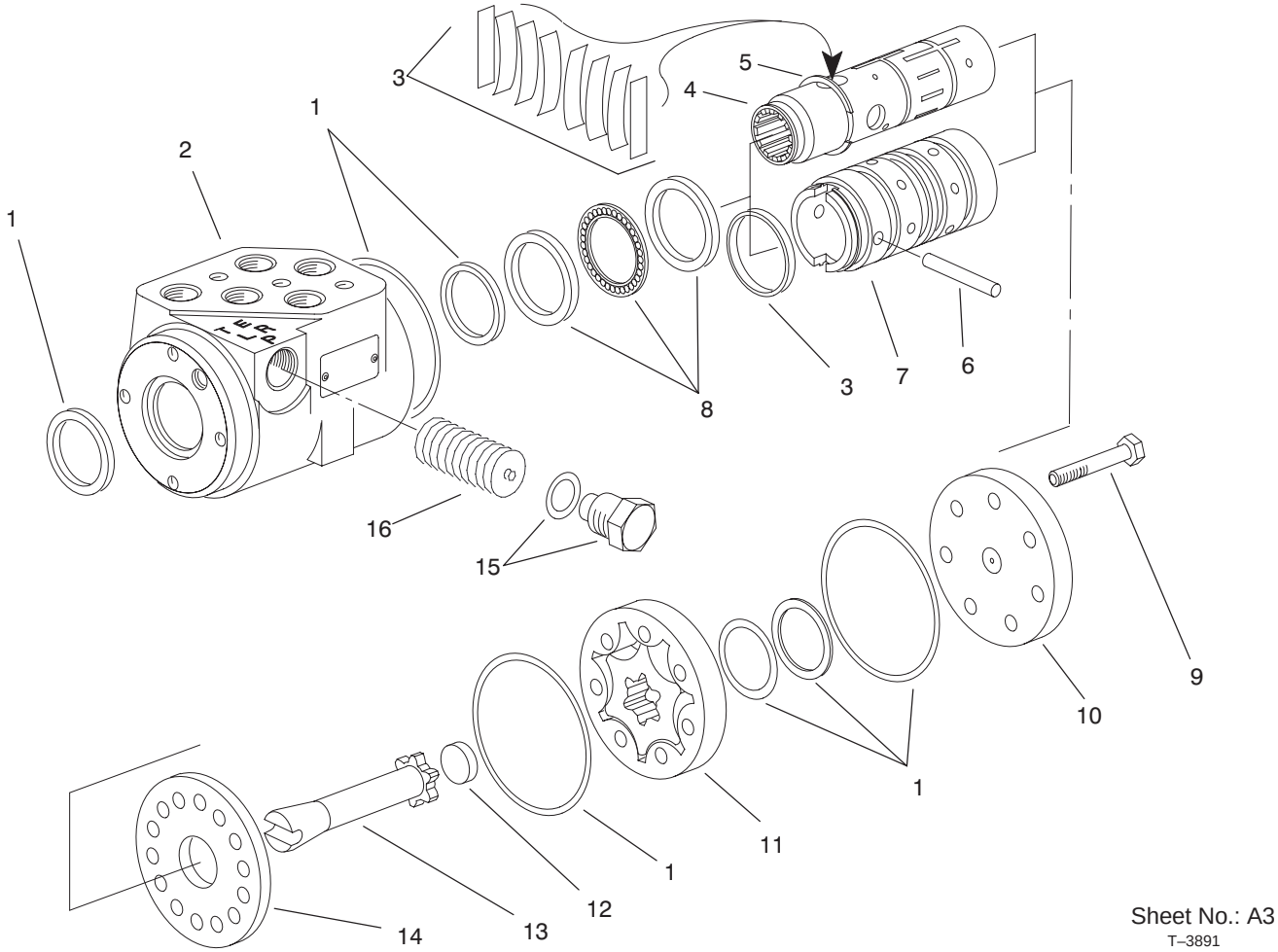

Steering Control Valve Assembly No. 105–0424

Ref. No.	Part No.	Qty.	Description
1	94–4099	1	Seal Kit
☆2		1	Housing
3	94–4095	1	Centering Spring Kit
☆4		1	Spool
5	94–4098	1	Ring–Retaining
6	94–4094	1	Pin
☆7		1	Sleeve
8	92–3839	1	Bearing Kit
9	105–2938	7	Screw–Cap
10	94–4089	1	Cap–End
11	105–2939	1	Gerotor ASM
12	105–2940	1	Spacer
13	94–4093	1	Drive
14	94–4092	1	Plate–Wear
15	99–5511	1	Plug ASM
16	99–5500	1	Valve–Relief

Ref. No.	Part No.	Qty.	Description

☆ Not serviced separately

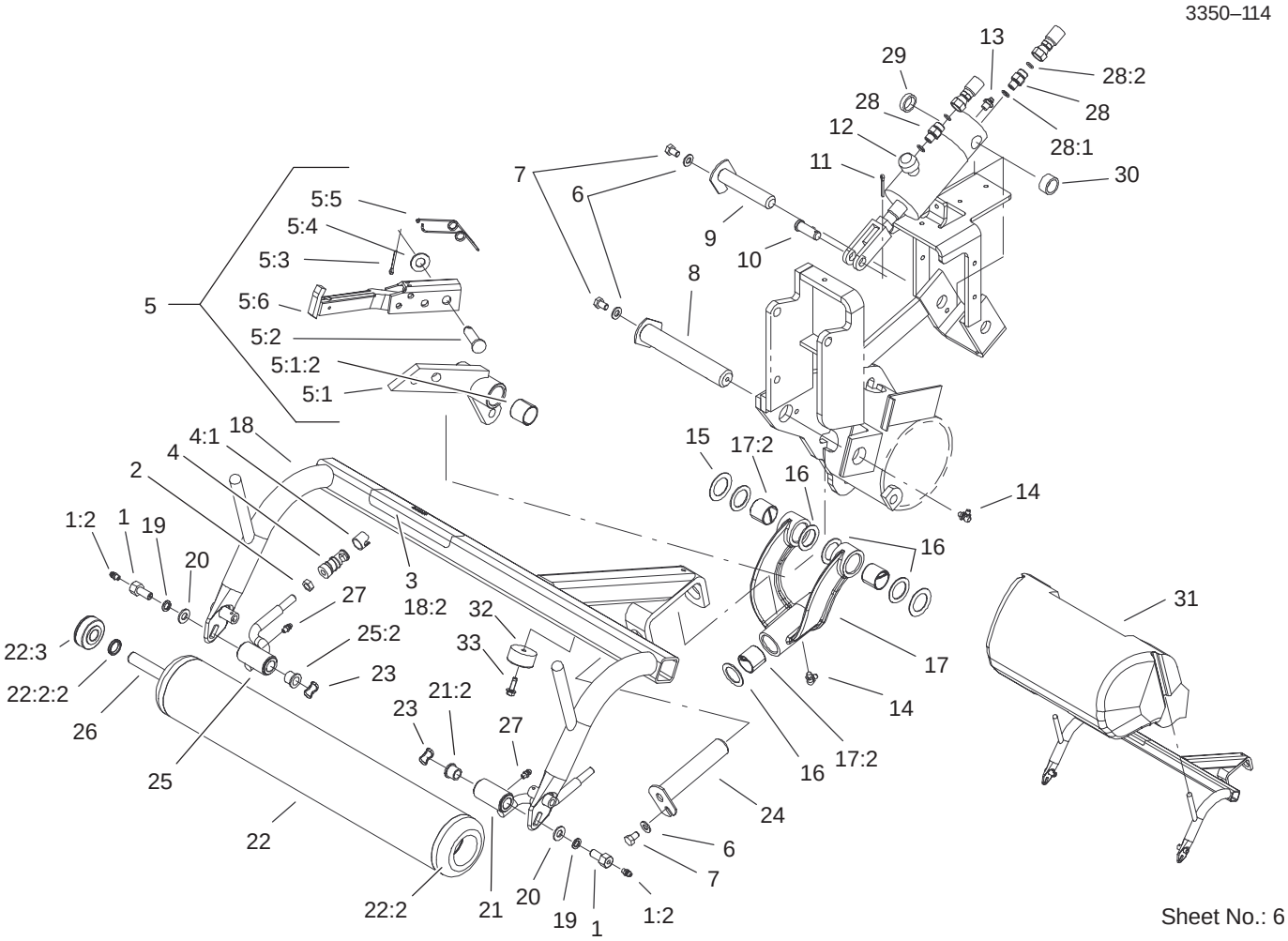

Right Hand Pull Frame Assembly

Ref. No.	Part No.	Qty.	Description
1	11–0160	2	Roller Shaft Screw ASM
1:2	302–5	1	Fitting–Grease
2	3220–3	2	Nut–Jam
3	93–8064	1	Decal–Danger, Ce
4	99–1460	2	Ball Joint Receiver ASM
4:1	99–1461	1	Sleeve–Joint, Ball
☆5		1	RH Lift Arm ASM
5:1	62–2440	1	Lift Arm ASM
5:1:2	3–0348	2	Bushing
5:2	63–8750	1	Pin–Pivot
5:3	3272–11	1	Pin–Cotter
5:4	3256–26	1	Washer–Flat
5:5	57–7650	1	Spring–Torsion
5:6	94–5588–01	1	Bar–Lift
6	3256–23	3	Washer–Flat
7	322–1	3	Screw–HH
8	10–6110	1	Pin–Hinge
9	10–6060	1	Pin–Pivot, Ram
10	283–8	1	Pin–Clevis
11	3272–11	1	Pin–Cotter
12	105–3822	1	HYD Cylinder ASM
13	302–2	1	Fitting–Grease
14	302–60	2	Fitting–Grease
15	5–1226	4	Washer

Ref. No.	Part No.	Qty.	Description
16	10–8110	6	Washer–Thrust
17	10–7820	1	Pivot Hinge ASM
17:2	3–0348	4	Bushing
18	104–2055	1	Right Pull Frame ASM
18:2	62–5070	1	Decal–Warning
19	3253–21	2	Washer–Lock
20	3256–24	2	Washer–Flat
21	92–0586	1	Pull Arm ASM
21:2	3–1506	2	Bushing
22	99–4277	1	Roller ASM
☆22:2		2	Hub Yoke ASM
22:2:2	253–83	1	Seal–Oil
22:3	251–141	2	Bearing–Ball
23	3290–317	2	Washer–Spring
24	10–6090	1	Pin–Pivot
25	92–0585	1	Pull Arm ASM
25:2	3–1506	2	Bushing
26	21–8470	1	Shaft–Roller
27	302–5	2	Fitting–Grease
28	340–92	2	Fitting–HYD, Straight
28:1	237–78	1	O–Ring
28:2	237–21	1	O–Ring
29	105–3828	1	Spacer
30	74–3730	1	Spacer–Spindle, Rear
31	37–8130	3	Basket–Grass
32	94–4548	2	Bumper–Recessed

☆ Not serviced separately

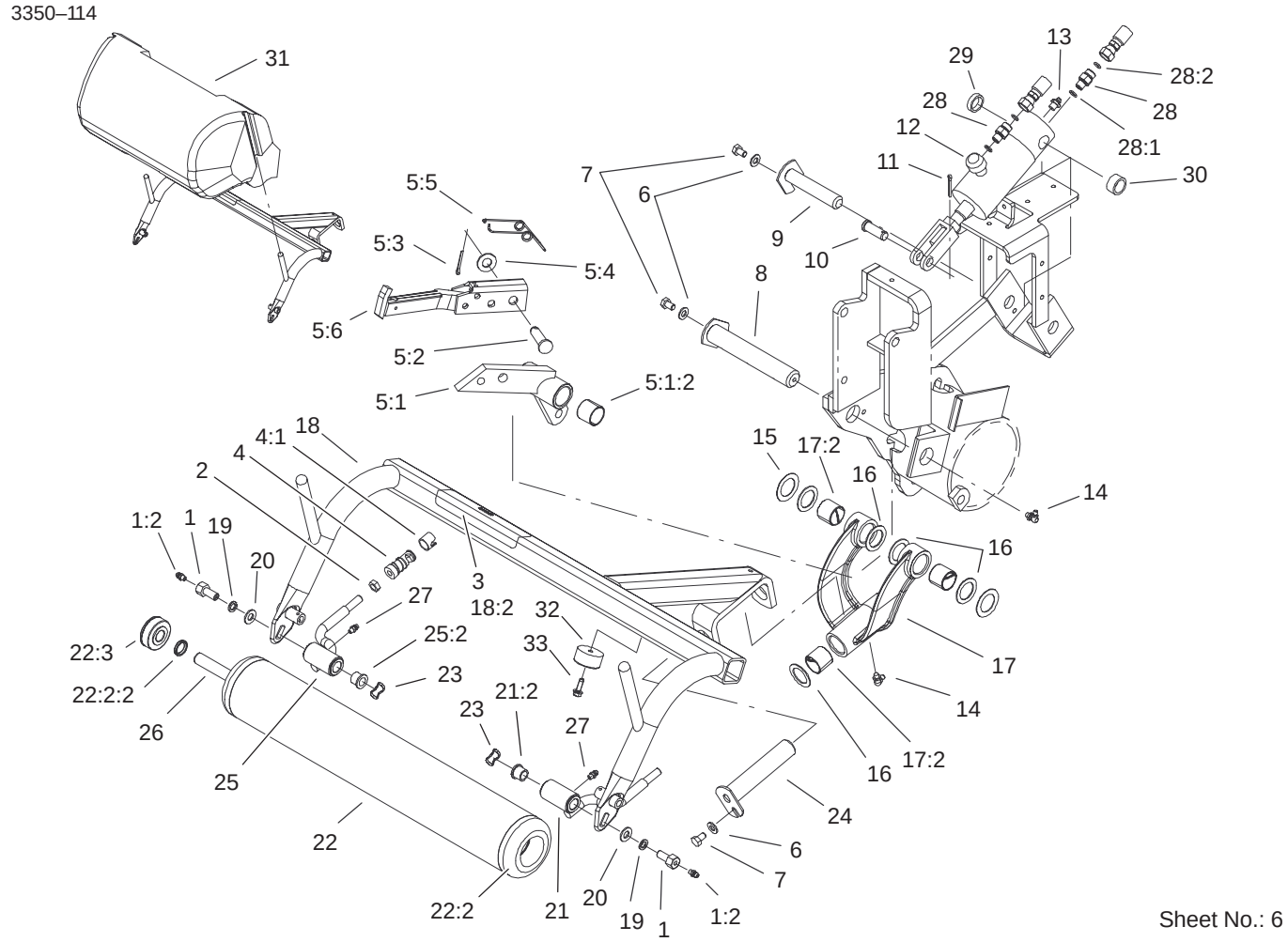

Right Hand Pull Frame Assembly (Continued)

Ref. No.	Part No.	Qty.	Description
33	32144–44	2	Screw–HWH

Ref. No.	Part No.	Qty.	Description

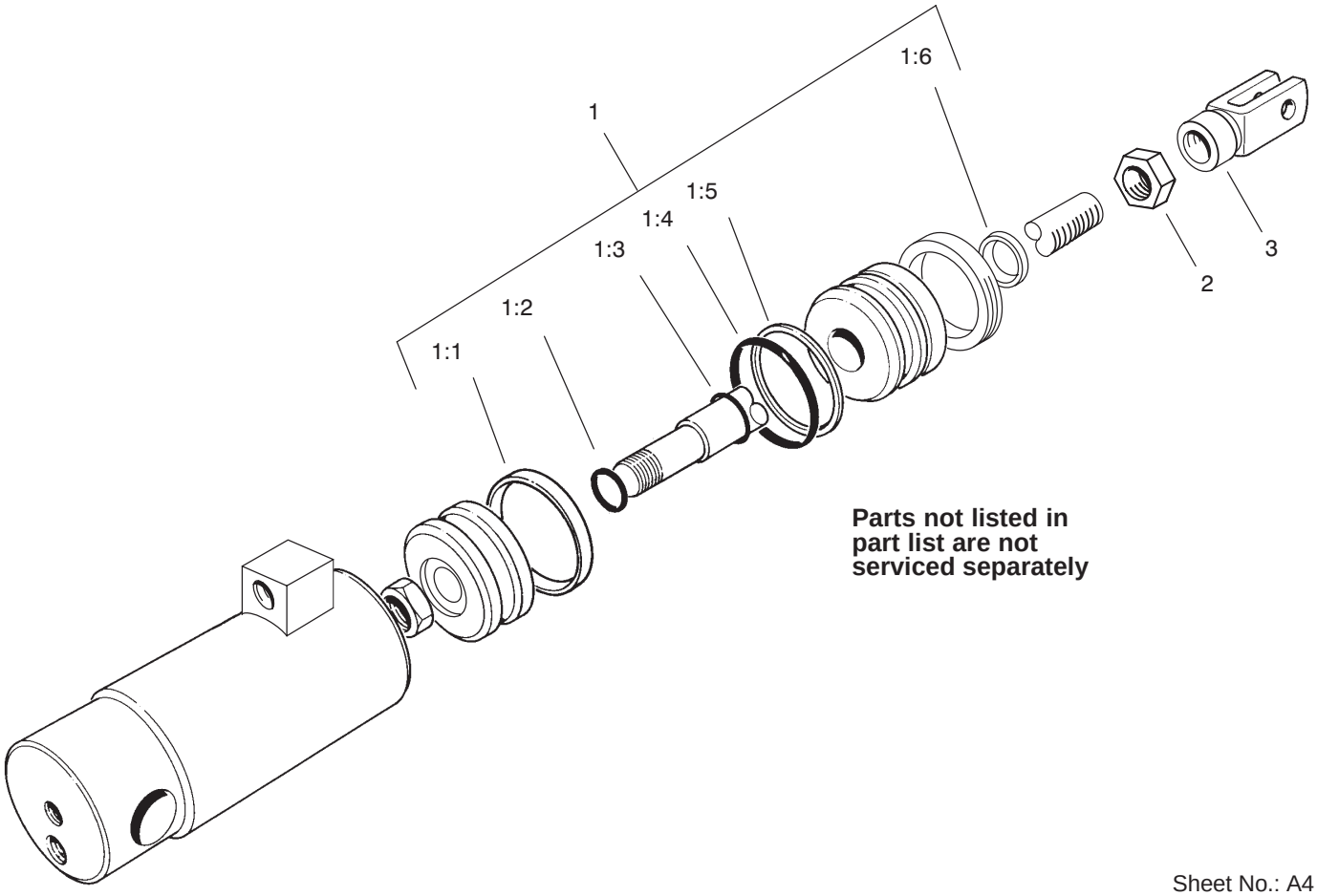

Sheet No.: A4
T–3847

Hydraulic Cylinder Assembly No. 105–3822

Ref. No.	Part No.	Qty.	Description
1	105–3836	1	Seal Kit
☆1:1		1	T–Seal
☆1:2		1	O–Ring
☆1:3		1	Seal–Rod
☆1:4		1	O–Ring
☆1:5		1	Backup
☆1:6		1	Seal–Dust
2	3220–6	1	Nut–Jam
3	76–1850	1	Clevis

Ref. No.	Part No.	Qty.	Description

☆ Not serviced separately

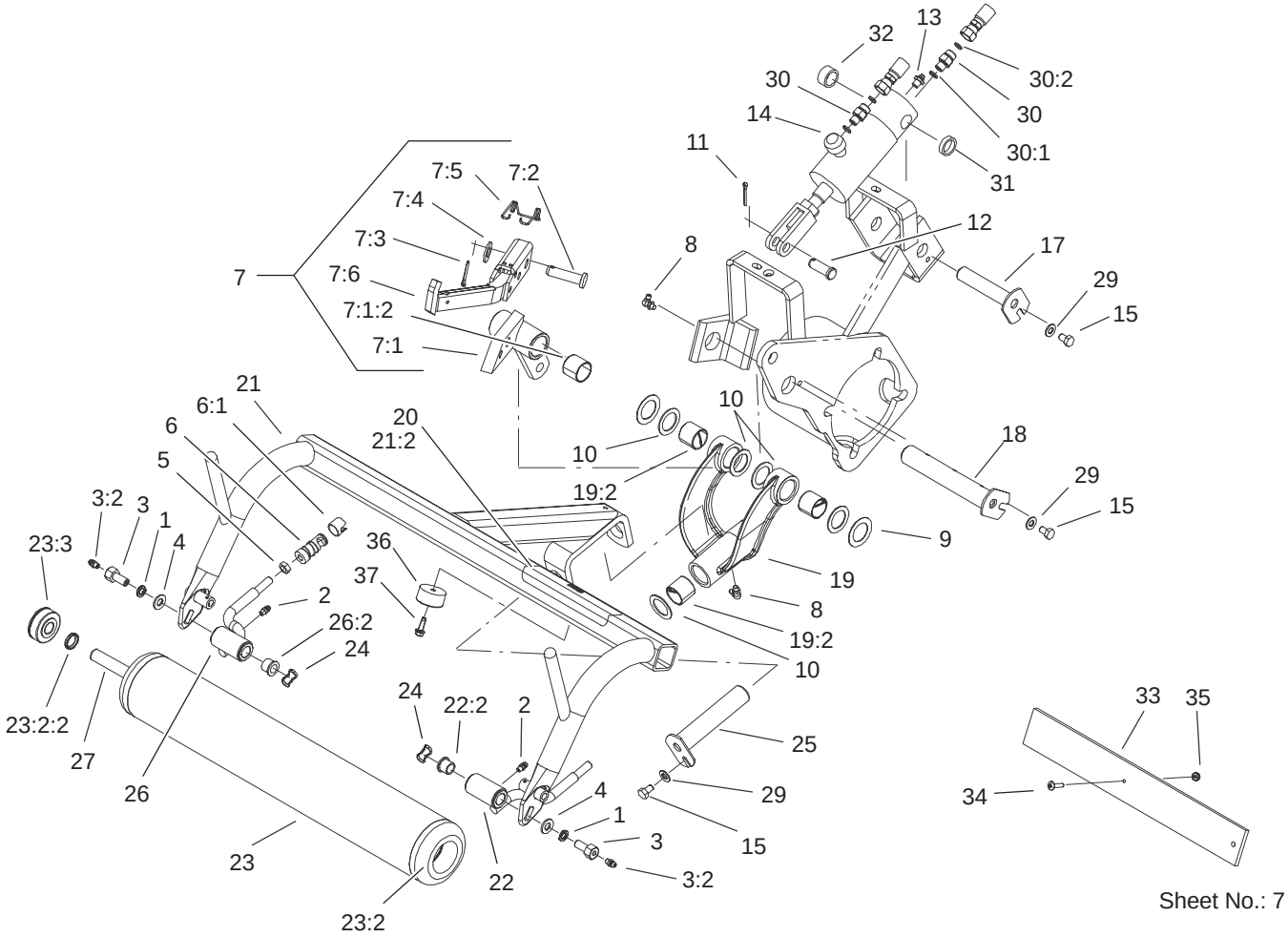

Sheet No.: 7

Left Hand Pull Frame Assembly

Ref. No.	Part No.	Qty.	Description
1	3253–21	2	Washer–Lock
2	302–5	2	Fitting–Grease
3	11–0160	2	Roller Shaft Screw ASM
3:2	302–5	1	Fitting–Grease
4	3256–24	2	Washer–Flat
5	3220–3	2	Nut–Jam
6	99–1460	2	Ball Joint Receiver ASM
6:1	99–1461	1	Sleeve–Joint, Ball
☆7		1	LH Lift Arm ASM
7:1	62–2460	1	Lift Arm ASM
7:1:2	3–0348	2	Bushing
7:2	63–8750	1	Pin–Pivot
7:3	3272–11	1	Pin–Cotter
7:4	3256–26	1	Washer–Flat
7:5	57–7650	1	Spring–Torsion
7:6	94–5586–01	1	Bar–Lift
8	302–60	2	Fitting–Grease
9	5–1226	4	Washer
10	10–8110	6	Washer–Thrust
11	3272–11	1	Pin–Cotter
12	283–8	1	Pin–Clevis
13	302–2	1	Fitting–Grease
14	105–3822	1	HYD Cylinder ASM
15	322–1	3	Screw–HH

Ref. No.	Part No.	Qty.	Description
17	10–6060	1	Pin–Pivot, Ram
18	10–6110	1	Pin–Hinge
19	10–7820	1	Pivot Hinge ASM
19:2	3–0348	4	Bushing
20	93–8064	1	Decal–Danger, Ce
21	104–2054	1	Left Pull Frame ASM
21:2	62–5070	1	Decal–Warning
22	92–0586	1	Pull Arm ASM
22:2	3–1506	2	Bushing
23	99–4277	1	Roller ASM
☆23:2		2	Hub Yoke ASM
23:2:2	253–83	1	Seal–Oil
23:3	251–141	2	Bearing–Ball
24	3290–317	2	Washer–Spring
25	10–6090	1	Pin–Pivot
26	92–0585	1	Pull Arm ASM
26:2	3–1506	2	Bushing
27	21–8470	1	Shaft–Roller
29	3256–23	3	Washer–Flat
30	340–92	2	Fitting–HYD, Straight
30:1	237–78	1	O–Ring
30:2	237–21	1	O–Ring
31	105–3828	1	Spacer
32	74–3730	1	Spacer–Spindle, Rear
33	65–8320	1	Bar–Gauge
34	32122–22	1	Screw–HH

☆ Not serviced separately

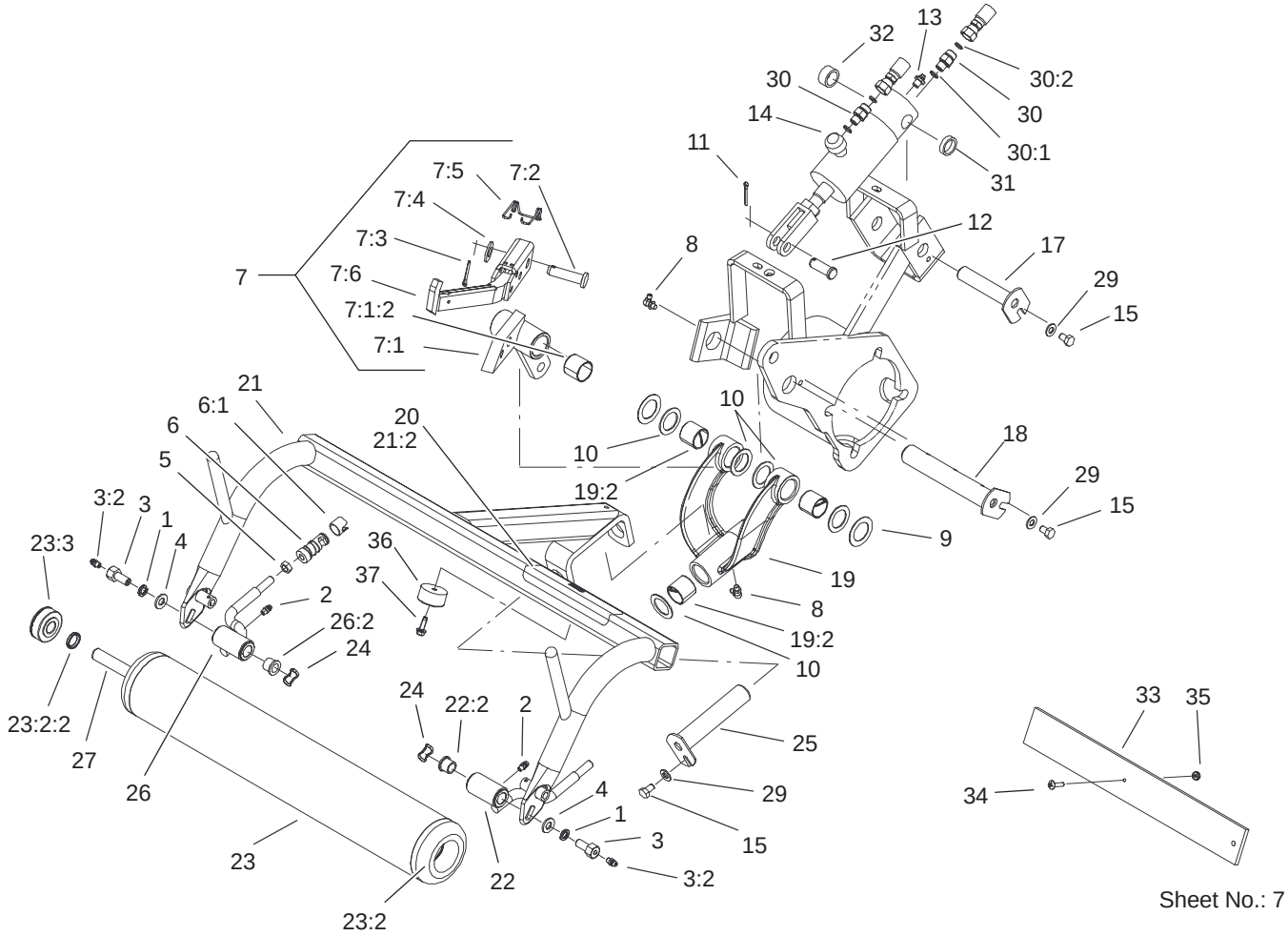

Sheet No.: 7

Left Hand Pull Frame Assembly (Continued)

Ref. No.	Part No.	Qty.	Description
35	3219–14	1	Nut–Hex
36	94–4548	2	Bumper–Recessed
37	32144–44	2	Screw–HWH

Ref. No.	Part No.	Qty.	Description

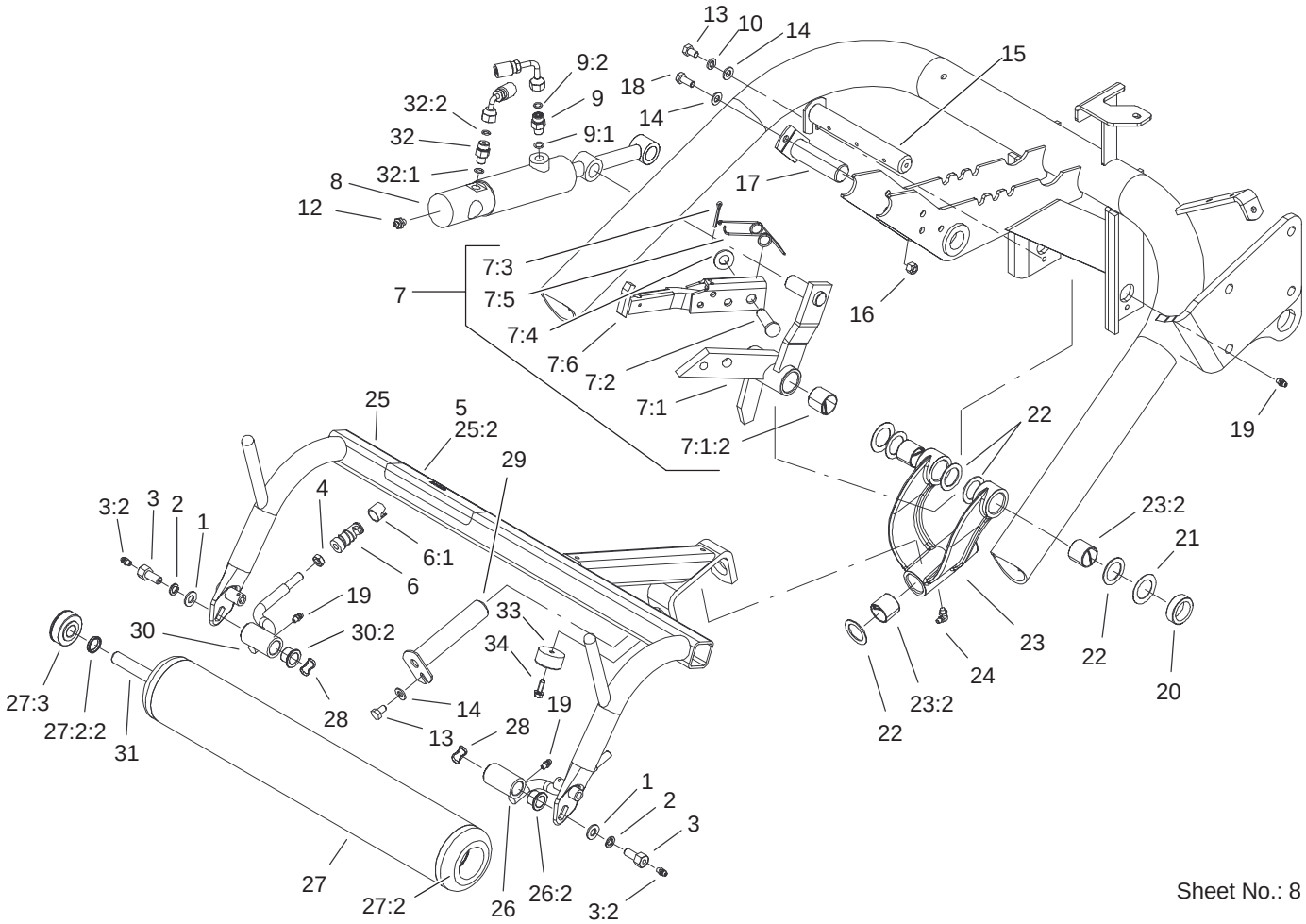

Sheet No.: 8

Center Pull Frame Assembly

Ref. No.	Part No.	Qty.	Description
1	3256–24	2	Washer–Flat
2	3253–21	2	Washer–Lock
3	11–0160	2	Roller Shaft Screw ASM
3:2	302–5	1	Fitting–Grease
4	3220–3	2	Nut–Jam
5	93–8064	1	Decal–Danger, Ce
6	99–1460	2	Ball Joint Receiver ASM
6:1	99–1461	1	Sleeve–Joint, Ball
☆7		1	Center Lift Arm ASM
7:1	68–5380	1	Center Lift Arm ASM
7:1:2	3–0348	2	Bushing
7:2	63–8750	1	Pin–Pivot
7:3	3272–11	1	Pin–Cotter
7:4	3256–26	1	Washer–Flat
7:5	57–7650	1	Spring–Torsion
7:6	62–2420–01	1	Bar–Lift
8	105–3823	1	Hydraulic Cylinder ASM
9	340–92	1	Fitting–HYD, Straight
9:1	237–78	1	O–Ring
9:2	237–21	1	O–Ring
10	3253–4	1	Washer–Lock
12	302–2	1	Fitting–Grease
13	322–1	2	Screw–HH

Ref. No.	Part No.	Qty.	Description
14	3256–23	3	Washer–Flat
15	27–2550	1	Pin–Hinge
16	3296–29	1	Nut–Lock, NI
17	68–5560	1	Pin–Cylinder, Pivot
18	322–3	1	Screw–HH
19	302–5	3	Fitting–Grease
20	93–2384	1	Spacer–Carrier
21	5–1226	4	Washer
22	10–8110	6	Washer–Thrust
23	105–0452	1	Pivot Hinge ASM
23:2	3–0348	4	Bushing
24	302–60	1	Fitting–Grease
25	105–0451	1	Rear Pull Frame ASM
25:2	62–5070	1	Decal–Warning
26	92–0586	1	Pull Arm ASM
26:2	3–1506	2	Bushing
27	99–4277	1	Roller ASM
☆27:2		2	Hub Yoke ASM
27:2:2	253–83	1	Seal–Oil
27:3	251–141	2	Bearing–Ball
28	3290–317	2	Washer–Spring
29	10–6090	1	Pin–Pivot
30	92–0585	1	Pull Arm ASM
30:2	3–1506	2	Bushing
31	21–8470	1	Shaft–Roller
32	95–1639	1	Fitting–HYD

☆ Not serviced separately

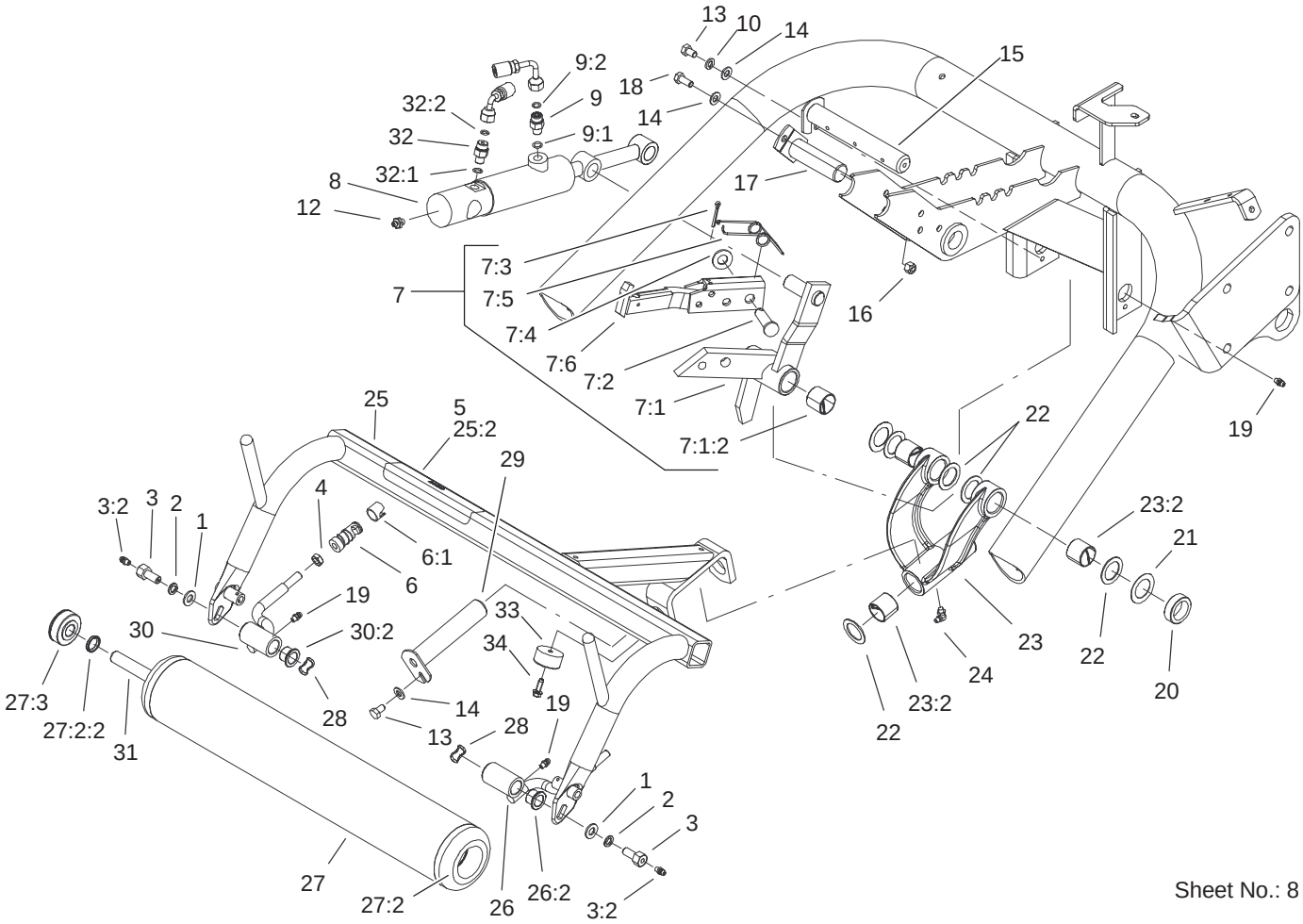

Sheet No.: 8

Center Pull Frame Assembly (Continued)

Ref. No.	Part No.	Qty.	Description
32:1	237–78	1	O–Ring
32:2	237–21	1	O–Ring
33	94–4548	2	Bumper–Recessed
34	32144–44	2	Screw–HWH

Ref. No.	Part No.	Qty.	Description

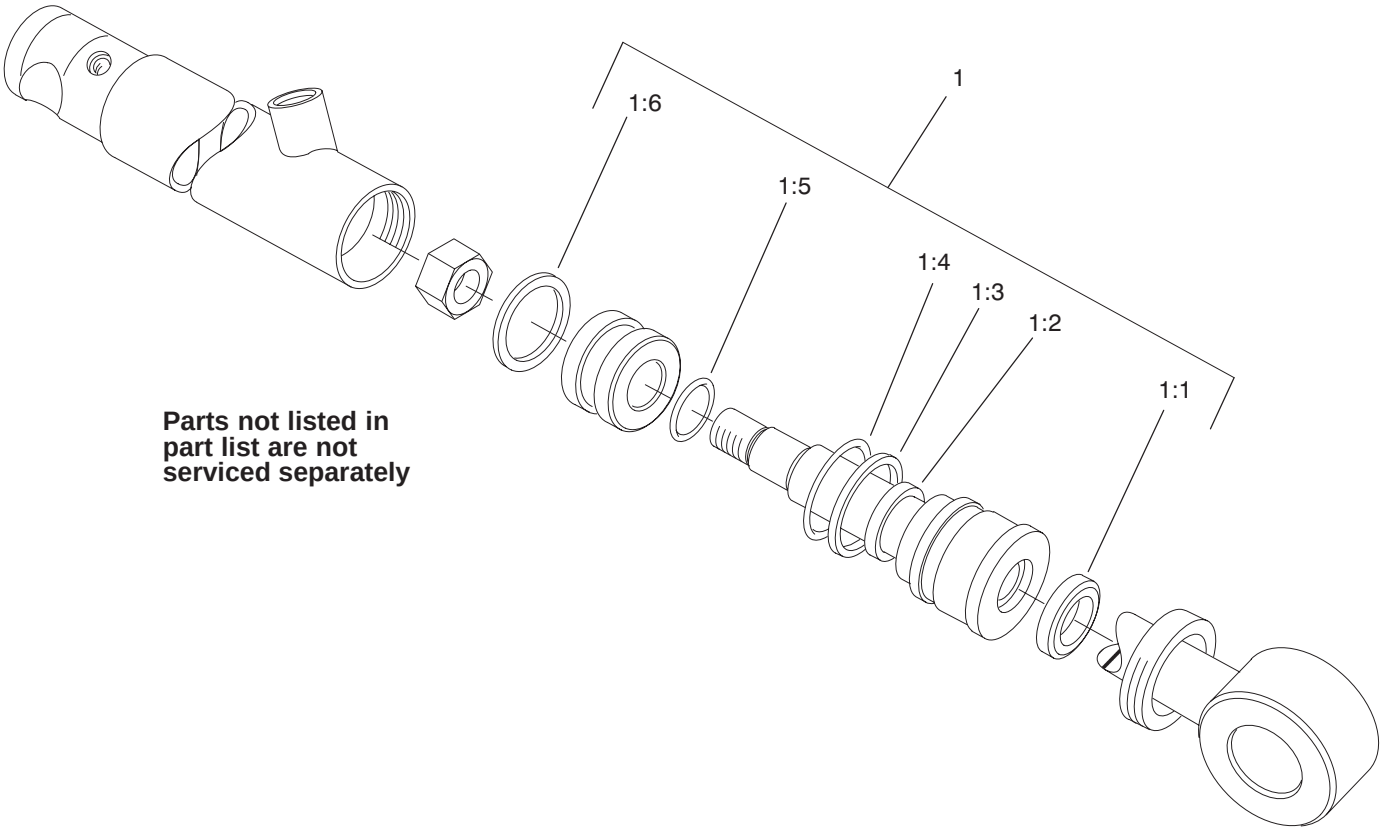

Sheet No.: A5

T–3876

Hydraulic Cylinder Assembly No. 105–3823

Ref. No.	Part No.	Qty.	Description
1	105–3835	1	Seal Kit
☆1:1		1	Seal–Dust
☆1:2		1	Seal–Rod
☆1:3		1	Backup
☆1:4		1	O–Ring
☆1:5		1	O–Ring
☆1:6		1	T–Seal

Ref. No.	Part No.	Qty.	Description

☆ Not serviced separately

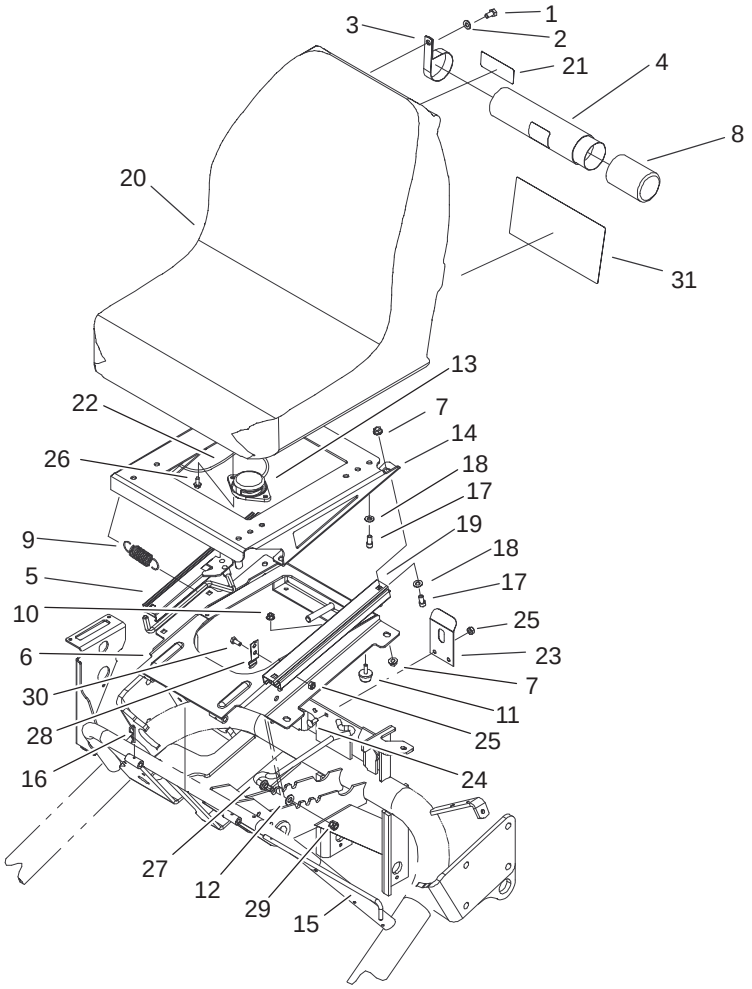

Sheet No.: 9

Seat Assembly

Ref. No.	Part No.	Qty.	Description
1	322–2	2	Screw–HH
2	3256–23	2	Washer–Flat
3	2412–133	2	R–Clamp
4	104–7050	1	Housing–Manual
5	105–8265	1	Adjuster–Seat
6	105–0464–03	1	Seat Plate ASM
7	32128–25	8	Nut–Flange
8	104–7048	1	Cap–Housing
9	88–6330	1	Spring–Extension
10	32128–33	2	Nut–HF
11	1–523420	2	Bumper
12	3256–24	1	Washer–Flat
13	92–6282	1	Switch–Seat
14	105–0466–03	1	Plate–Seat, Upper
15	105–0483	1	Rod–Pivot, Seat
16	3290–467	1	Pin–Hair
17	3274–12	8	Screw–HSH
18	3256–23	8	Washer–Flat
19	51–0780	1	Slider–Seat
20	100–3187	1	Seat ASM
21	93–6686	1	Decal–Oil, HYD
22	105–4319	1	Harness–Wire, Seat
23	66–2630	1	Latch–Seat
24	3229–1	2	Screw–CARR
25	3296–16	4	Nut–Lock, NI
26	32144–10	2	Screw–HWH

Ref. No.	Part No.	Qty.	Description
27	106–4643	1	Rod–Prop,Seat
28	68–5310	1	Clip–Rod, Prop
29	3296–39	1	Nut–Lock, NI
30	321–3	2	Screw–HH
31	105–8291	1	Decal–Service
31	105–8292	1	Decal–Spanish
31	105–8293	1	Decal–French
31	105–8294	1	Decal–German
31	105–8295	1	Decal–Swedish
31	105–8296	1	Decal–Italian
31	105–8297	1	Decal–Portuguese
31	105–8298	1	Decal–Norwegian
31	105–8299	1	Decal–Finnish
31	105–8300	1	Decal–Danish
31	105–8301	1	Decal–Dutch
31	105–8302	1	Decal–Japan

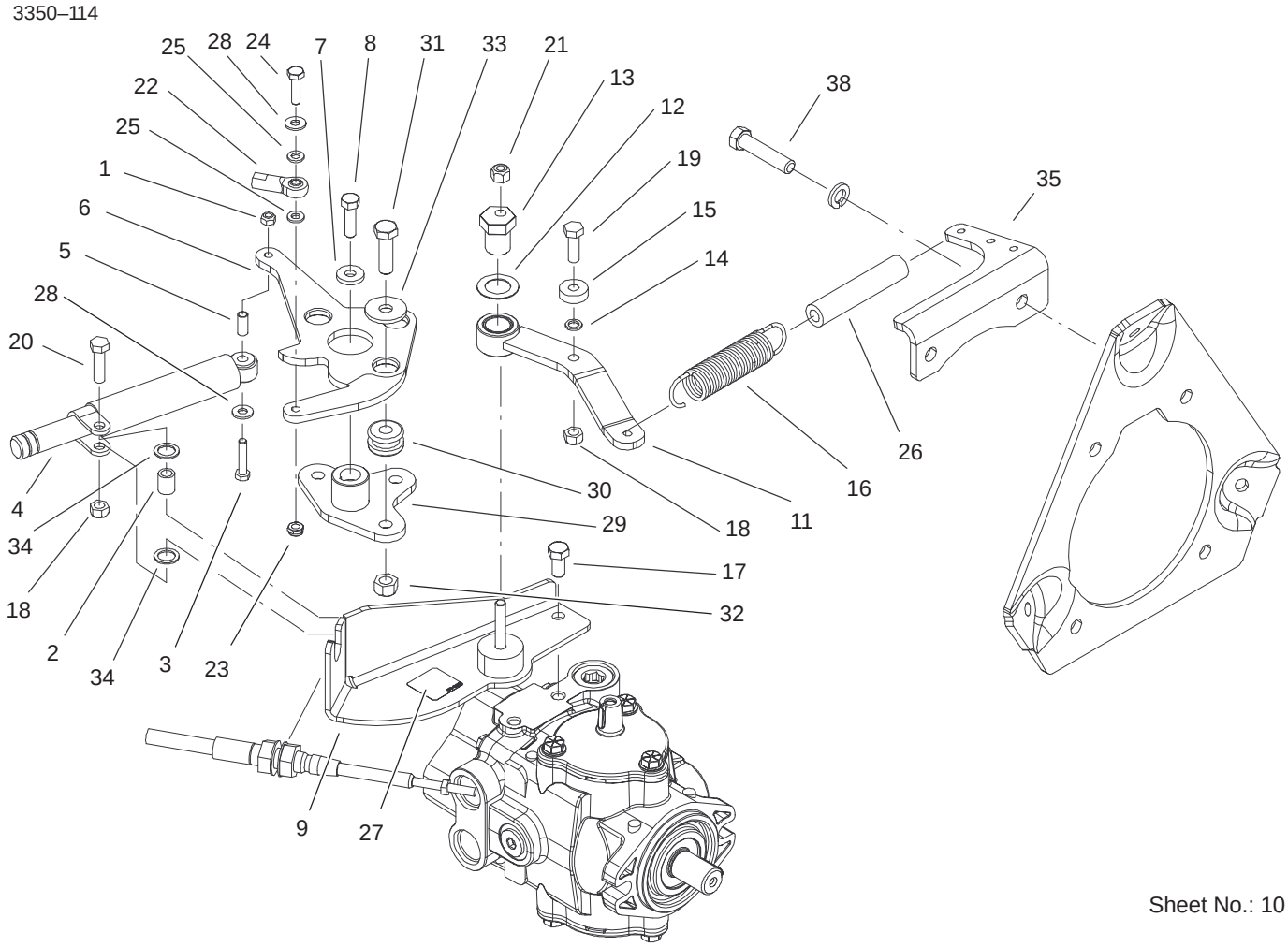

Sheet No.: 10

Neutral System Assembly

Ref. No.	Part No.	Qty.	Description
1	33023–00	1	Nut–Lock
2	94–8197	1	Tube–Pivot
3	33113–035	1	Screw–HH
4	76–8870	1	Lever Damper ASM
5	94–1312	1	Spacer–Pivot
6	105–5477–03	1	Lever–Pump
7	88–7200	1	Washer–Flat
8	3210–6	1	Screw–HH
9	105–5475	1	Cable Support ASM
11	105–4302	1	Neutral Arm ASM
12	3–6498	1	Washer–Thrust
13	93–2111	1	Stud–Traction
14	75–5470	1	Spacer–Bearing
15	251–259	1	Bearing–Ball
16	94–1369	1	Spring–Extension
17	323–4	2	Screw–HH
18	33024–00	2	Nut–Lock
19	33114–025	1	Screw–HH
20	33114–030	1	Screw–HH
21	3296–29	1	Nut–Lock, NI
22	2411–41	1	Joint–Ball
23	3296–56	1	Nut–Lock, NI
24	321–7	1	Screw–HH
25	33093–00	2	Washer–Flat
26	99–4251	1	Hose–Dampener
27	93–9051	1	Decal–Bolt, Eccentric

Ref. No.	Part No.	Qty.	Description
28	3256–22	2	Washer–Flat
29	94–3486	1	Plate
30	63–9750	3	Mount
31	33115–035	3	Screw–HH
32	33025–00	3	Nut–Lock
33	2844	3	Washer
34	94–8196	2	Washer–Nylon
35	105–4307–03	1	Bracket–Spring
38	324–8	2	Screw–HH

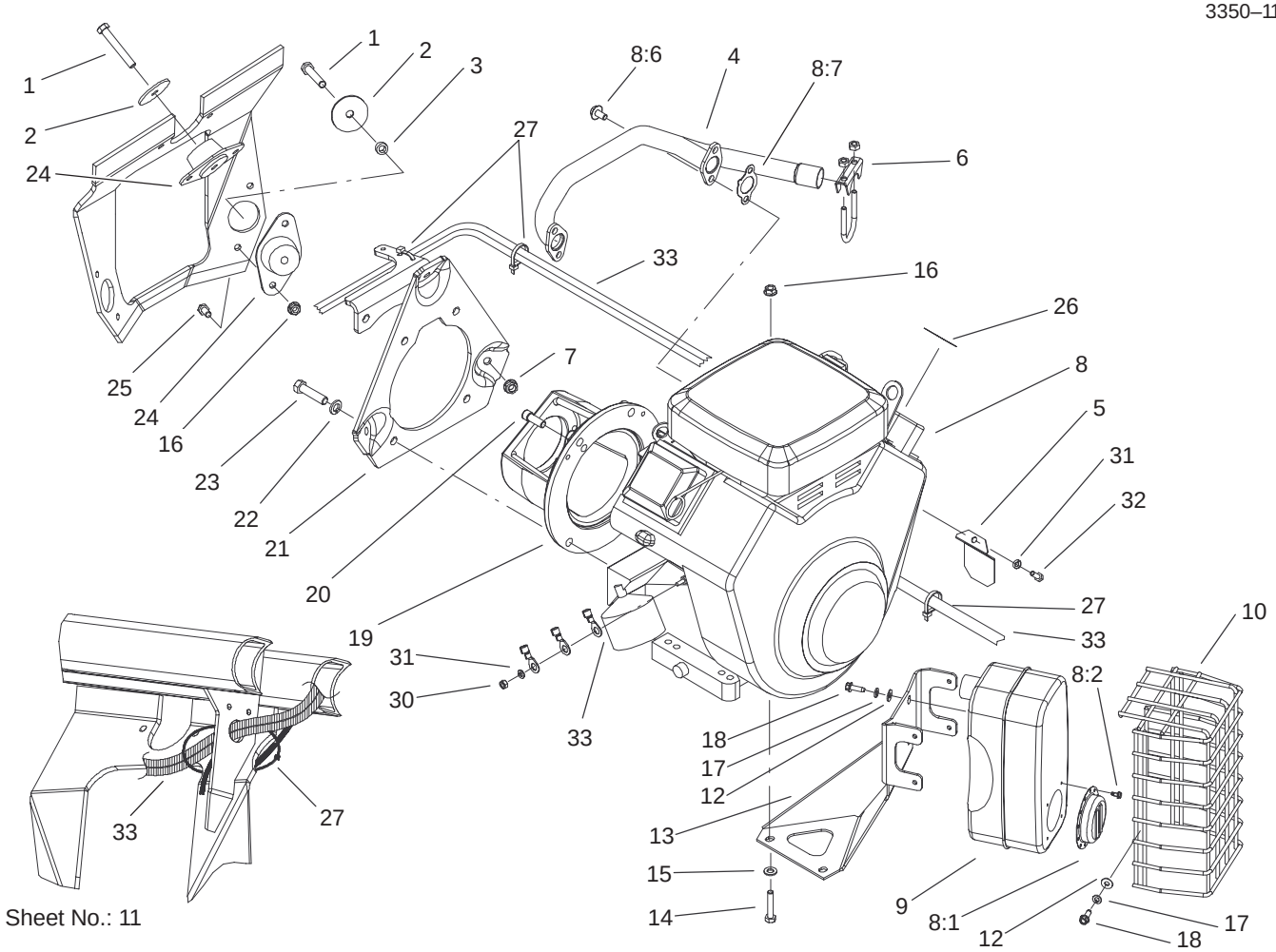

Sheet No.: 11

Engine Installation Assembly

Ref. No.	Part No.	Qty.	Description
1	323–12	3	Screw–HH
2	83–1040	3	Washer–Flat
3	83–1050	2	Spacer
4	83–1080	1	Exhaust Manifold ASM
5	83–2310	1	Shield–Regulator
6	2112–11	1	Clamp–Muffler
7	3290–357	3	Nut–HHF
8	106–4618	1	Engine–18hp, Vanguard
☆8:1		1	Deflector–Exhaust
☆8:2		4	Screw–HH
☆8:6		4	Screw–HHF
☆8:7		2	Gasket–Manifold, Exhaust
9	98–0616	1	Muffler ASM
10	83–1400–03	1	Shield–Muffler
12	3256–1	8	Washer–Flat
13	83–1630–03	1	Bracket–Support, Muffler
14	322–8	2	Screw–HH
15	3256–23	2	Washer–Flat
16	32128–20	8	Nut–HF
17	3253–3	8	Washer–Lock
18	49–2040	8	Screw–Tapping
19	83–1060–03	1	Adapter–Pump
20	3274–7	2	Screw–HSH

Ref. No.	Part No.	Qty.	Description
21	85–8120–03	1	Plate–Mount, Engine
22	3253–6	4	Washer–Lock
23	324–7	2	Screw–HH
24	83–1030	3	Mount–Engine
25	322–3	6	Screw–HH
26	93–8069	1	Decal–Surface, Hot
27	3290–379	4	Tie–Cable
30	43–2830	1	Nut–Hex
31	43–5930	2	Washer–Spring
32	33113–016	1	Screw–HH
33	105–8276	1	Harness–Wire, Engine
*33:1	106–4642	1	Harness–Wire, Fusible Link

☆ Not serviced separately
* Not illustrated

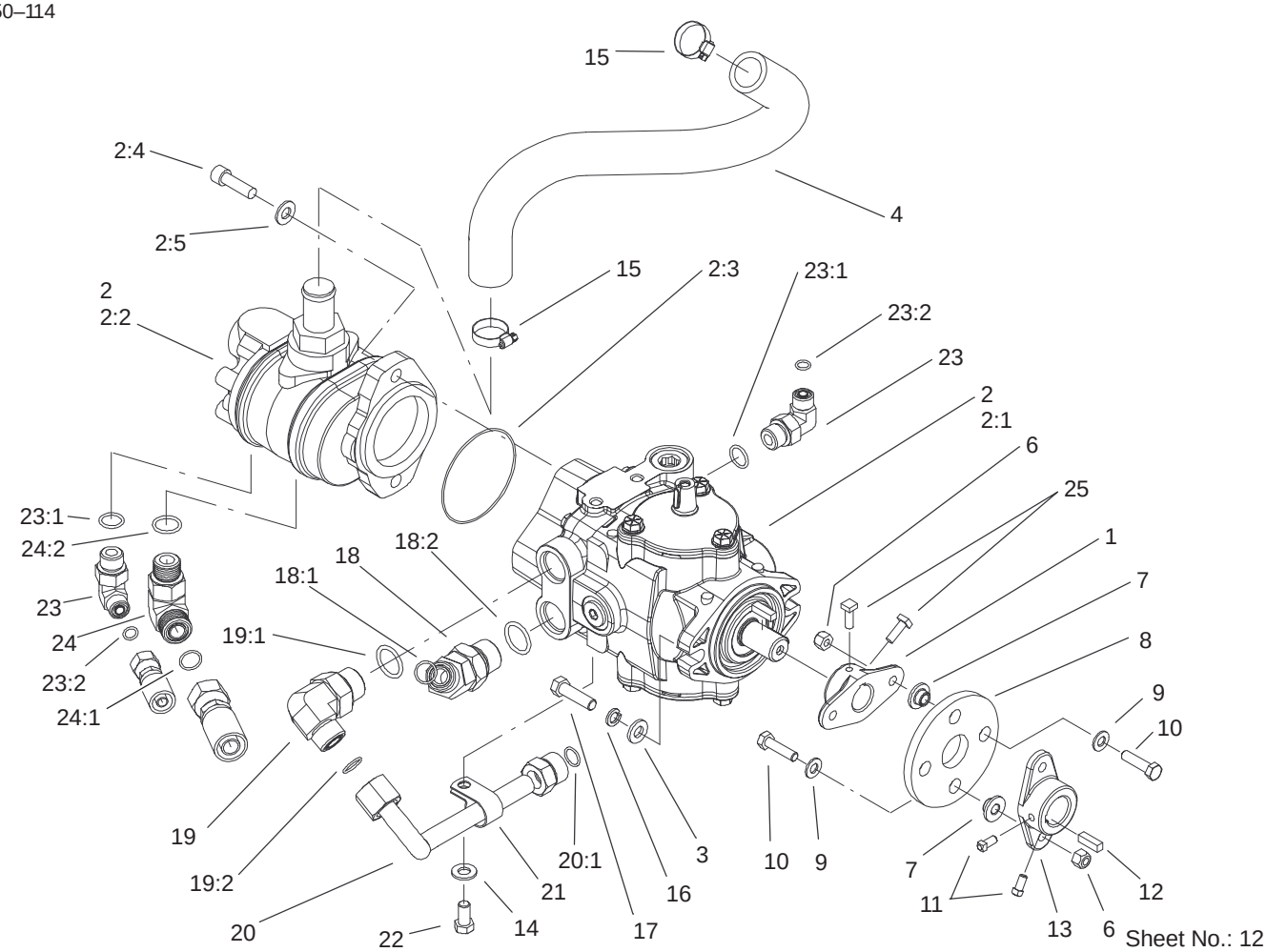

Hydrostat and Gear Pump Drive Assembly

Ref. No.	Part No.	Qty.	Description
1	93–2589	1	Hub–Pump
2	105–0453	1	Hydrostat/Gear Pump ASM
2:1	105–0494	1	Hydrostat ASM
2:2	104–7737	1	Gear Pump ASM
2:3	60–3520	1	O–Ring
2:4	3274–1	2	Screw–HSH
2:5	3256–24	2	Washer–Flat
3	100–4852	2	Washer–Hardened
4	105–8285	1	Hose–Inlet, Pump
6	3296–29	4	Nut–Lock, NI
7	27–6600	4	Spacer–Coupling
8	44–2230	1	Coupling–Rubber
9	3256–3	4	Washer–Flat
10	322–6	4	Screw–HH
11	3241–2	2	Screw–SQH
12	10–7070	1	Key–Square
13	27–1960	1	Hub–Engine
14	3256–24	1	Washer–Flat
15	2412–34	2	Clamp–Hose
16	3253–21	2	Washer–Lock
17	323–29	2	Screw–HH
18	340–156	1	Fitting–HYD
18:1	237–65	1	O–Ring
18:2	237–81	1	O–Ring
19	340–139	1	Fitting–HYD, 90°

Ref. No.	Part No.	Qty.	Description
19:1	237–81	1	O–Ring
19:2	237–65	1	O–Ring
20	105–8307	1	Tube–HYD, Traction
20:1	237–65	1	O–Ring
21	2412–41	1	Clamp
22	323–4	1	Screw–HH
23	340–18	2	Fitting–HYD, 90°
23:1	237–79	1	O–Ring
23:2	237–22	1	O–Ring
24	340–17	1	Fitting–HYD, 90°
24:1	237–65	1	O–Ring
24:2	237–80	1	O–Ring
25	3241–6	2	Screw–SQH

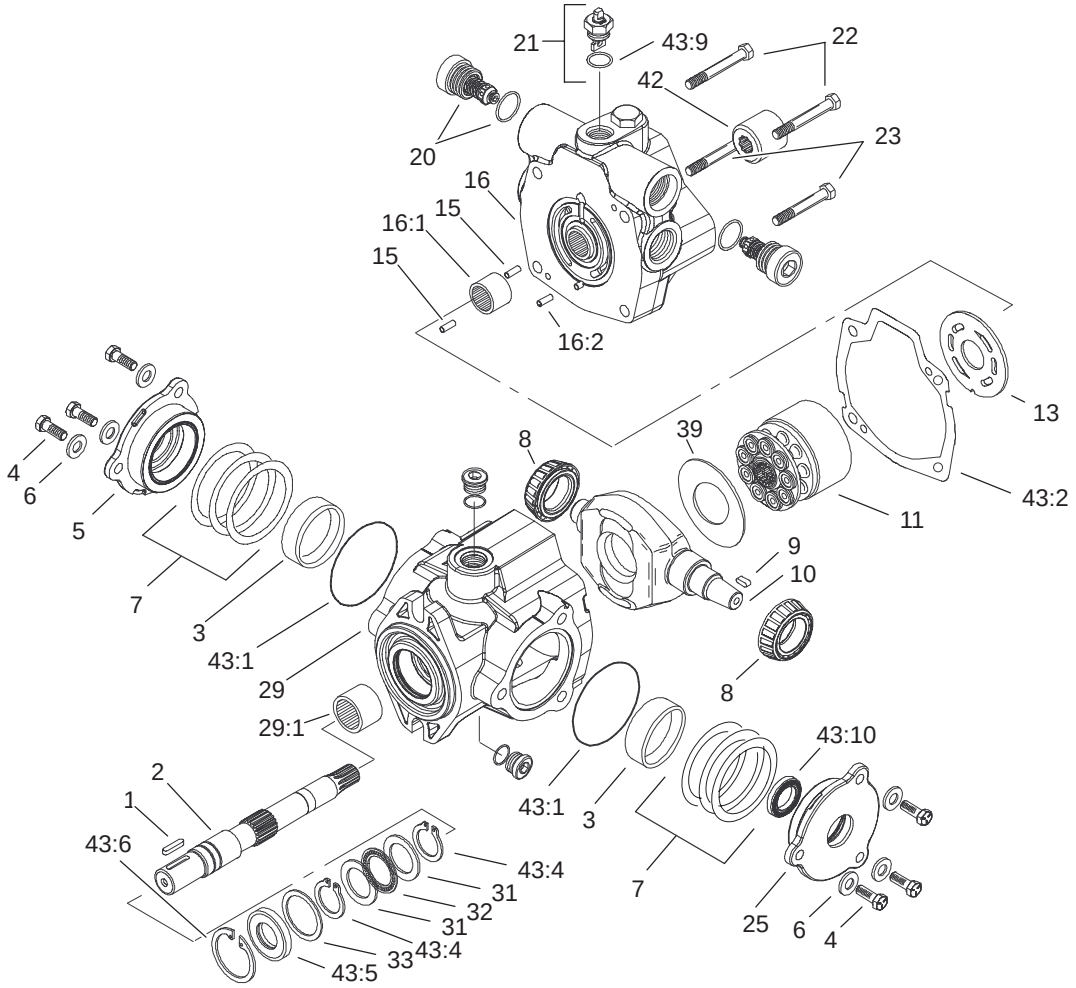

Sheet No.: A6

T–2357

Hydrostat Assembly No. 105–0494

Ref. No.	Part No.	Qty.	Description
1	94–3645	1	Key
2	94–6359	1	Shaft–Drive
3	104–4046	2	Bearing–Cup
4	98–4640	6	Screw–Cap
5	98–4644	1	Plate–Cover
6	105–9762	6	Washer
7	100–3182	2	Shim Kit
8	98–4639	2	Bearing–Cone
9	94–3646	1	Key
10	100–3175	1	Camplate
11	76–6070	1	Rotating Kit
13	100–3180	1	Valve–Plate
15	76–6150	2	Pin–Dowel
16	105–3813	1	Endcover Sub ASM
16:1	94–6368	1	Bearing
☆16:2		1	Pin–Roll
20	105–3812	2	Valve–Check
21	105–3811	1	Valve–Bypass
22	76–6170	2	Capscrew
23	76–6160	2	Capscrew
25	98–4645	1	Plate–Cover
29	100–3176	1	Housing ASM
29:1	94–6363	1	Bearing
31	252–71	2	Washer–Thrust
32	252–66	1	Bearing–Thrust
33	33–3720	1	Washer

Ref. No.	Part No.	Qty.	Description
39	98–4635	1	Insert–Plate, Cam
42	74–9040	1	Coupler
43	105–3844	1	Seal Repair Kit
43:1	100–3179	2	O–Ring
43:2	33–4930	1	Gasket–Housing
43:4	32151–29	2	Ring–Retaining
43:5	104–4861	1	Seal–Shaft
43:6	32151–13	1	Ring–Retaining
☆43:9		1	O–Ring
☆43:10		1	Seal–Shaft

☆ Not serviced separately

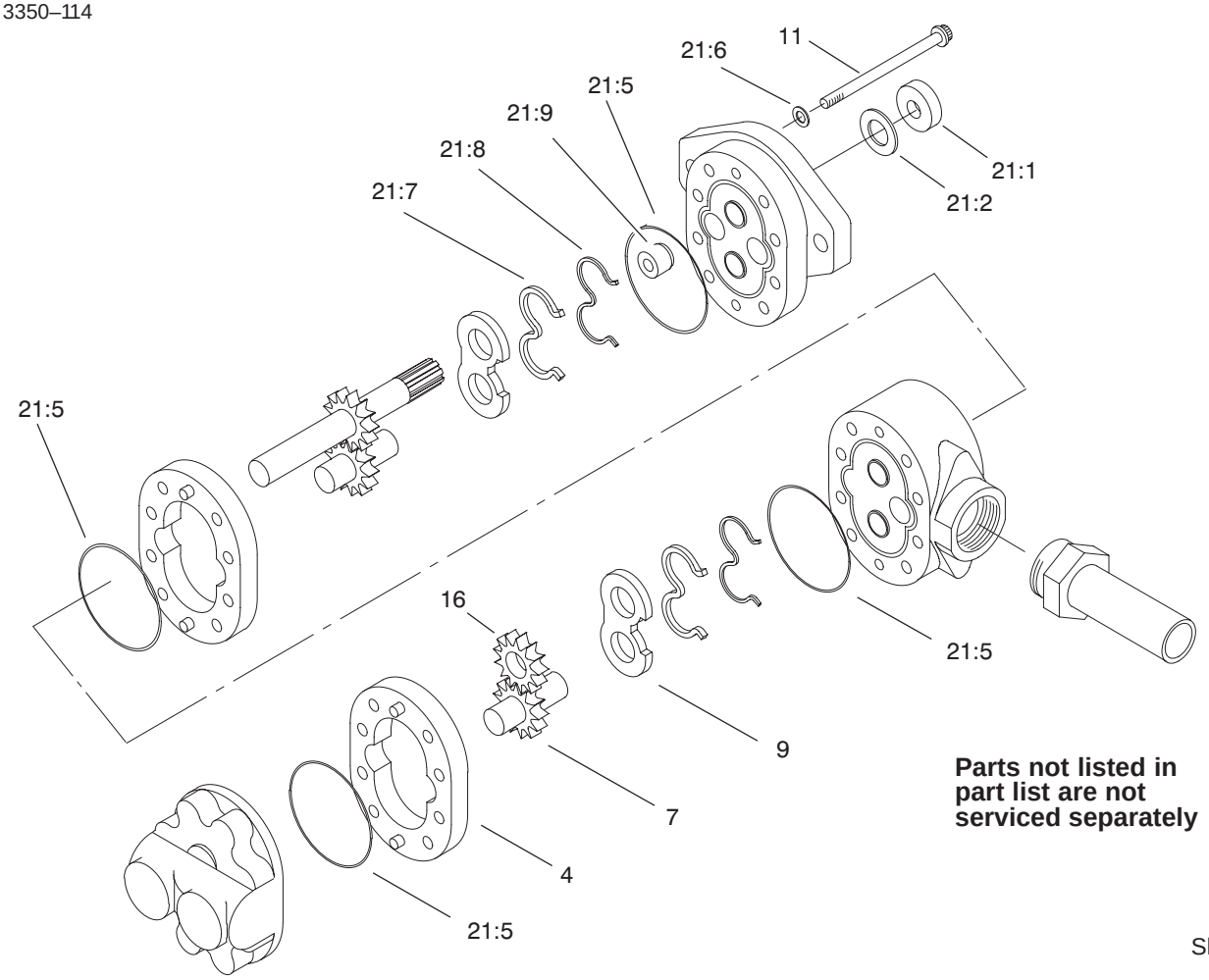

Sheet No.: A7

T–3483

Gear Pump Assembly No. 104–7737

Ref. No.	Part No.	Qty.	Description
4	95–4364	1	Body
7	95–4366	1	Gear–Idler
9	95–4368	2	Plate–Wear
11	94–8158	8	Screw–Cap
16	95–4373	1	Gear–Fit, Slip
21	94–8161	1	Seal Repair Kit
21:1	49–2640	1	Seal–Shaft
21:2	60–5890	1	Washer
☆21:5		4	O–Ring
21:6	94–8160	4	Washer
21:7	95–4369	2	Seal
21:8	95–4367	2	Gasket
21:9	94–3011	1	Plug

Ref. No.	Part No.	Qty.	Description

☆ Not serviced separately

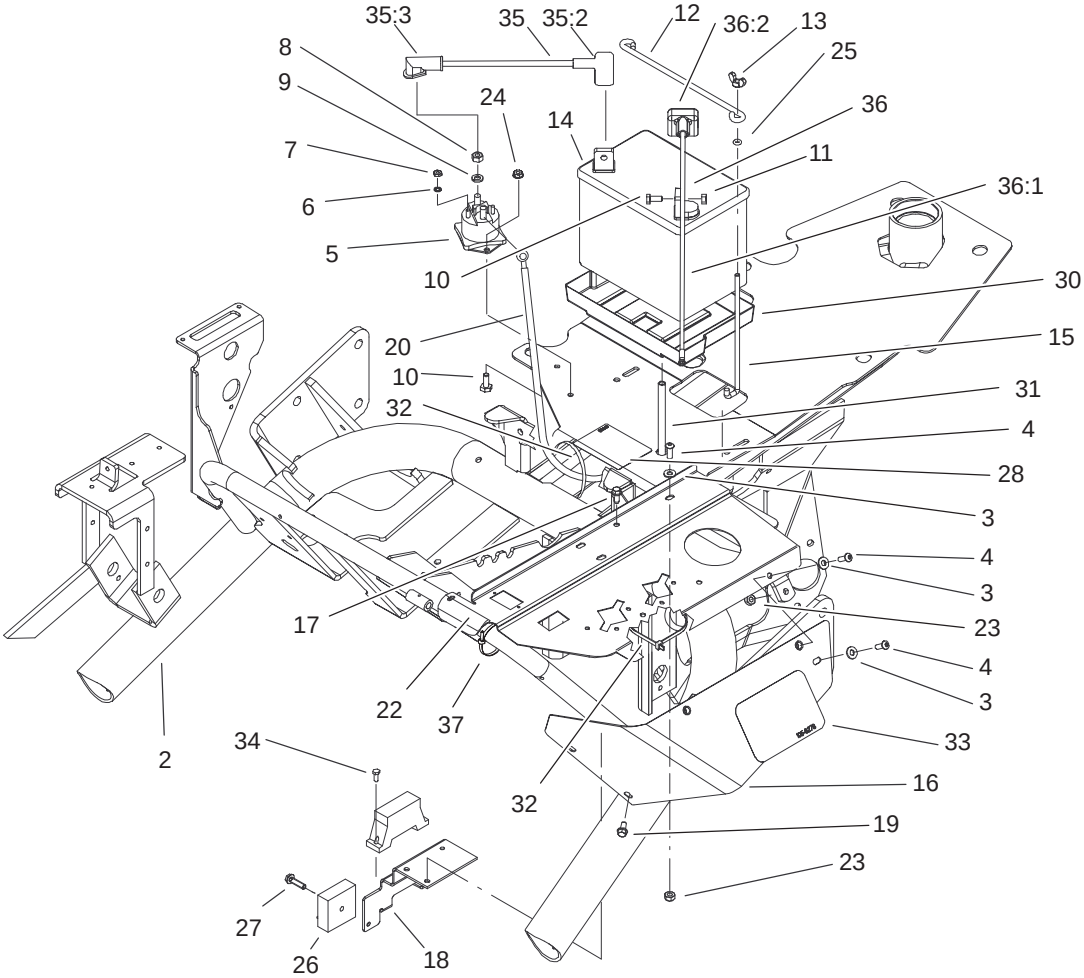

Sheet No.: 13

Frame and Battery Assembly

Ref. No.	Part No.	Qty.	Description
2	105–0401–01	1	Frame ASM
3	3256–22	4	Washer–Flat
4	3274–69	4	Screw–HSBH
5	28–4210	1	Solenoid
6	3254–1	2	Washer–Lock, Int
7	3219–14	2	Nut–Hex
8	3218–13	2	Nut–Jam
9	3253–4	2	Washer–Lock
10	321–3	4	Screw–HH
11	3217–5	2	Nut–Hex
12	100–6434	1	Rod–Battery, Hold Down
13	32103–22	2	Nut–Wing
14	104–8162	1	Battery (Dry)
15	100–6435	2	Post–Battery
16	105–5411	1	Valve Cover Shield ASM
17	32144–10	1	Screw–HWH
18	105–4310–01	1	Bracket–Fuse
19	32104–116	2	Screw
20	98–2161	1	Cable–Battery, Positive
22	105–0499–03	1	Panel–Control
23	3296–16	2	Nut–Lock, NI
24	32149–2	2	Nut
25	237–143	2	O–Ring

Ref. No.	Part No.	Qty.	Description
26	92–2538	1	Timer–Plug, Glow
27	32144–86	1	Screw–HH
28	93–7276	1	Decal–Danger
30	106948	1	Tray–Battery
31	104–2061	1	Tube–Drain, Battery
32	3290–379	2	Tie–Cable
33	105–8278	1	Decal
34	32144–1	2	Screw–Taptite
35	83–2420	1	Positive Cable ASM
35:2	28–8080	1	Boot–Terminal
35:3	83–2430	1	Boot–Terminal
36	98–2165	1	Negative Cable ASM
36:1	83–1150	1	Engine Ground Wire ASM
36:2	98–0603	1	Boot–Terminal
37	3290–378	1	Tie–Cable

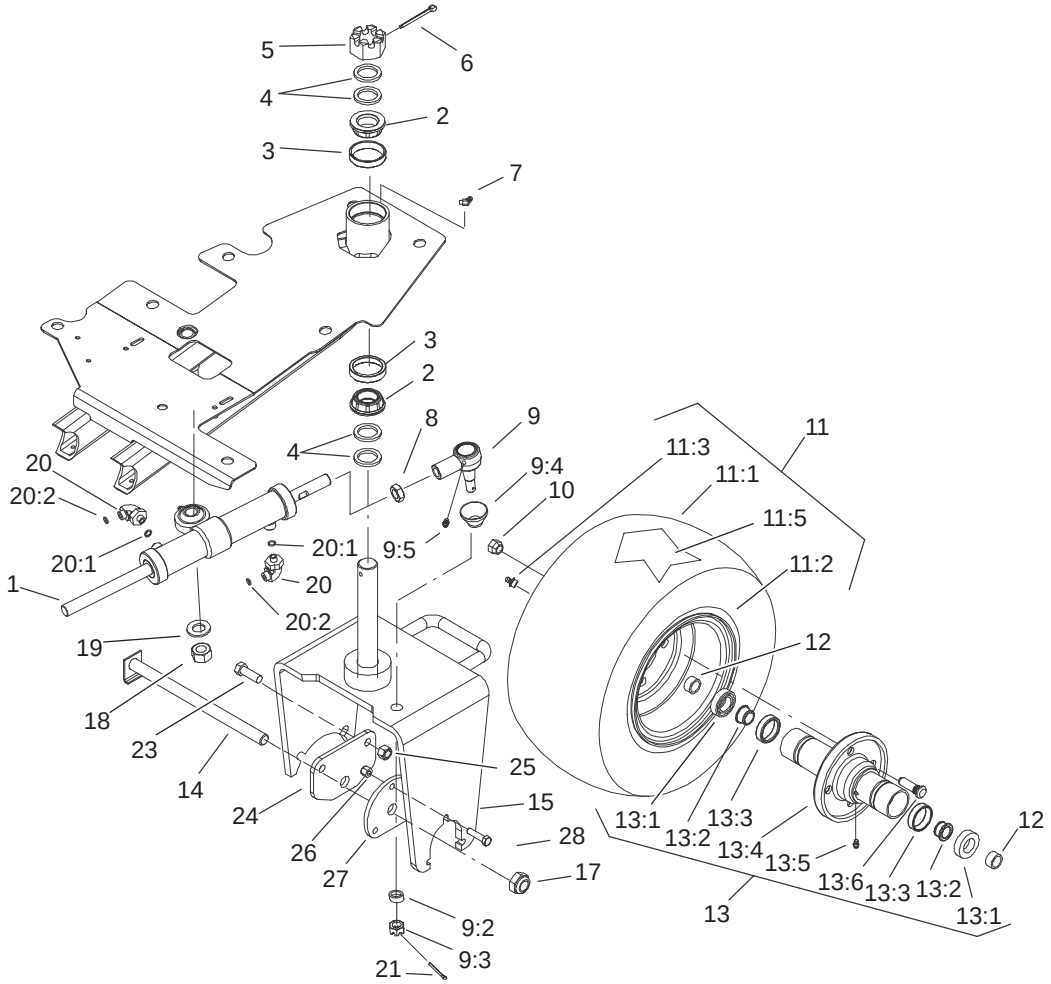

Sheet No.: 14

Rear Wheel Assembly

Ref. No.	Part No.	Qty.	Description
1	105–0411	1	Cylinder–Steering
2	254–70	2	Bearing–Cone
3	254–61	2	Bearing–Cup
4	18–6320	4	Washer–Steering
5	32136–9	1	Nut–SHH
6	3272–37	1	Pin–Cotter
7	302–11	1	Fitting–Lube, 45°
8	84–5300	1	Nut–Jam
9	107–2553	1	Rod End ASM
9:2	98–2389	1	Spacer–Link, Pull
9:3	32136–2	1	Nut–SHH
9:4	106–6896	1	Seal
9:5	302–5	1	Fitting–Grease
10	242–50	4	Nut–Lug
☆11		1	Wheel And Tire ASM
11:1	28–3680	1	Tire
11:2	217–60	1	Rim
11:3	232–27	1	Stem–Valve
11:5	232–37	1	Tube
12	74–3730	2	Spacer–Spindle, Rear
13	72–9710	1	Hub–Tire, Sulky
13:1	253–111	2	Seal–Oil
13:2	254–78	2	Bearing–Cone
13:3	254–79	2	Bearing–Roller, Cup
13:4	75–9440	1	Hub ASM
13:5	302–55	1	Fitting–Grease

Ref. No.	Part No.	Qty.	Description
13:6	10–6830	4	Stud–Type, Drive
14	5–3934	1	Bolt–Caster
15	93–2529–01	1	Fork–Castor
17	3296–67	1	Nut–Lock NI
18	3217–12	1	Nut–Hex
19	3256–28	1	Washer–Flat
20	340–132	2	Fitting–HYD, 90°
20:1	237–78	1	O–Ring
20:2	237–21	1	O–Ring
21	3272–12	1	Pin–Cotter
23	325–6	2	Screw–HH
24	99–1485–01	1	Plate–Adapter, Motor
25	3296–23	2	Nut–Lock, NI
26	3296–39	3	Nut–Lock, NI
27	99–1486–01	1	Plate–Adapter
28	323–8	3	Screw–HH

☆ Not serviced separately

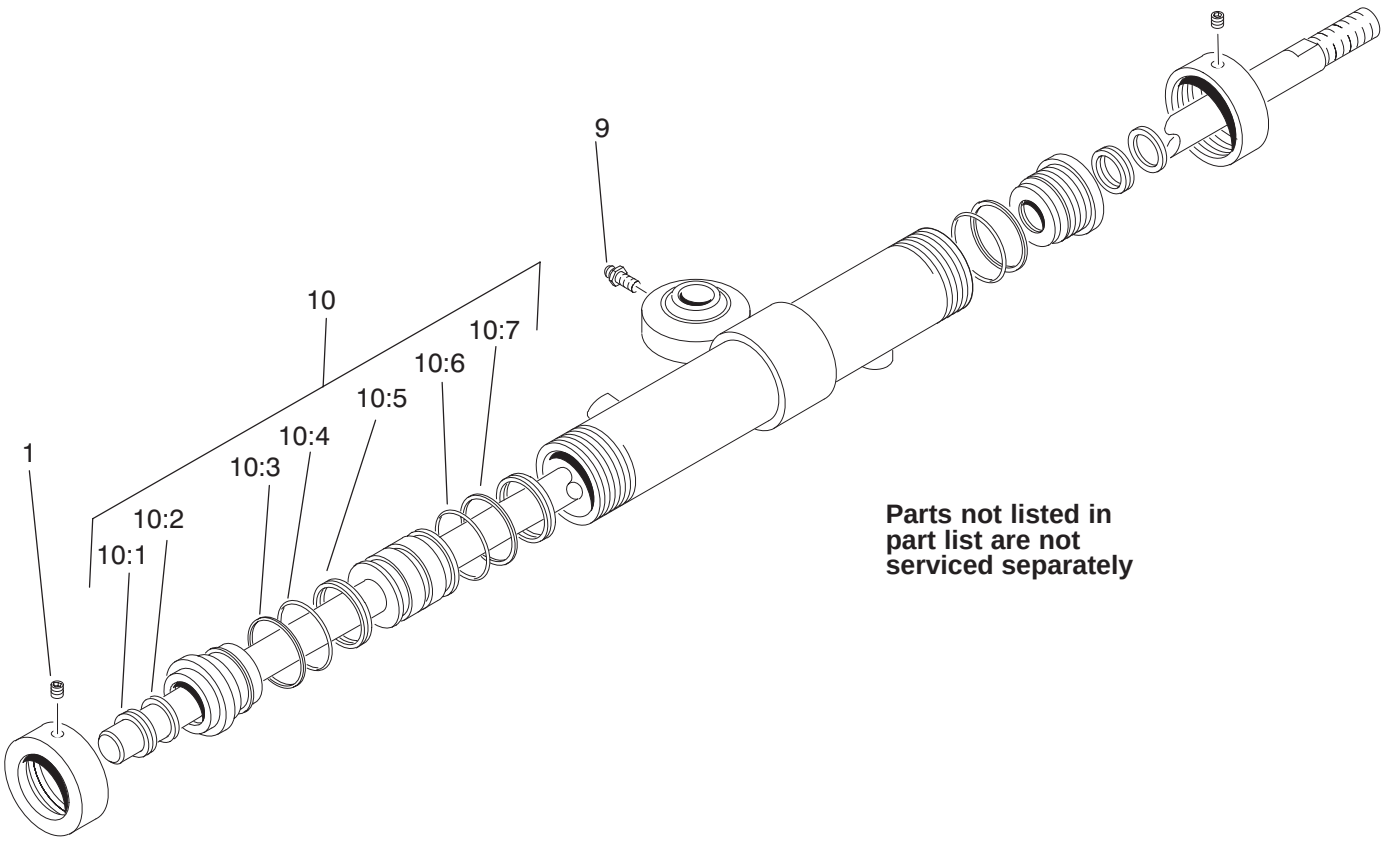

Sheet No.: A8

T–3892

Steering Cylinder Assembly No. 105–0411

Ref. No.	Part No.	Qty.	Description
1	3245–1	2	Screw–Set, HSH
9	302–5	1	Fitting–Grease
10	83–2380	1	Seal Repair Kit
☆10:1		2	Wiper–Rod
☆10:2		2	U–Cup–Double Lip
☆10:3		2	Ring–Back–Up
☆10:4		2	O–Ring
☆10:5		2	Ring–Wear
☆10:6		1	O–Ring
☆10:7		1	O–Ring

Ref. No.	Part No.	Qty.	Description

☆ Not serviced separately

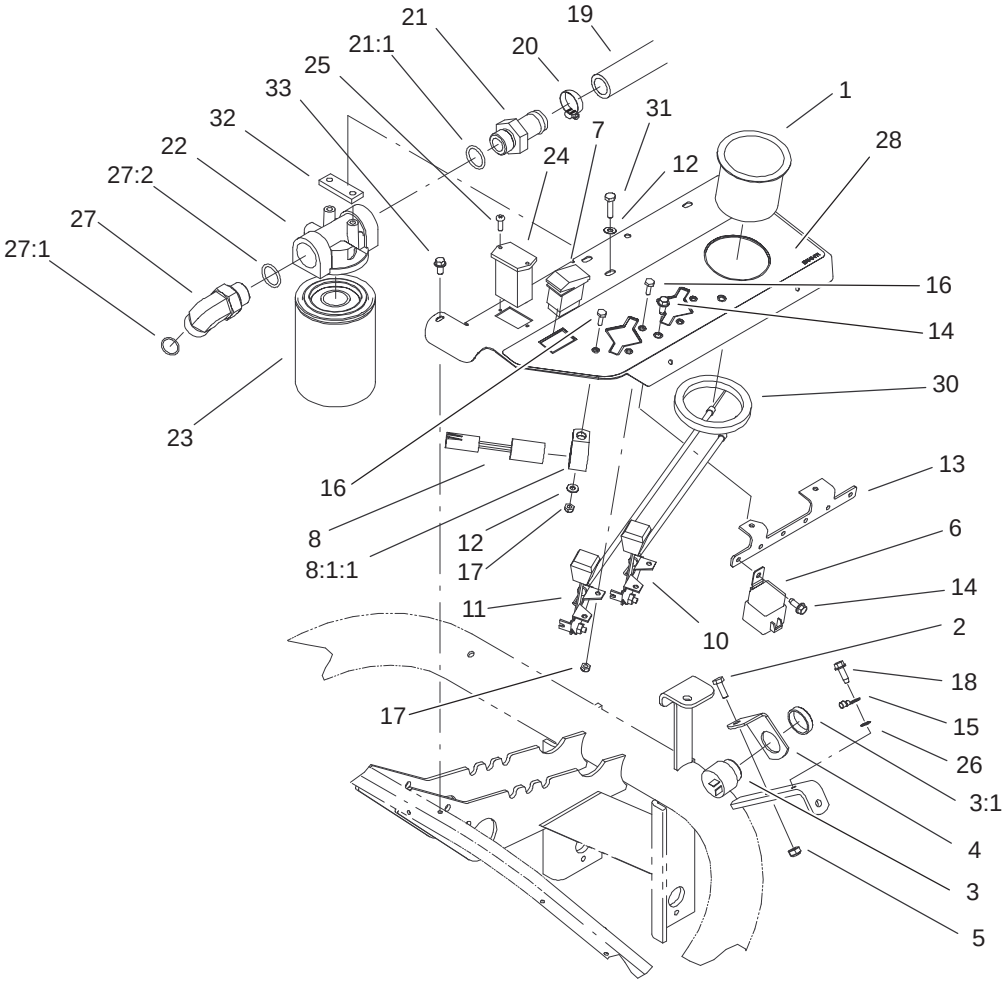

Sheet No.: 15

Control Panel Assembly

Ref. No.	Part No.	Qty.	Description
1	94–1410	1	Holder–Can, Beverage
2	321–4	1	Screw–HH
3	80–9330	1	Alarm–Audio
3:1	104–5107	1	Nut–Plastic, Knurled
4	83–1530	1	Bracket–Support, Buzzer
5	3296–16	1	Nut–Lock, NI
6	99–7430	6	Relay
7	105–4320	1	Switch
8	83–2280	1	Timer–Delay
8:1	98–4604	1	R–Clamp
10	83–0040	1	Control–Choke
11	83–0030	1	Control–Throttle
12	3256–22	3	Washer–Flat
13	105–4306–03	1	Bracket–Relay
14	32144–10	8	Screw–HWH
15	83–1150	1	Engine Ground Wire ASM
16	3290–134	5	Screw
17	3296–12	5	Nut–Lock
18	32104–95	1	Screw–HWH
19	105–5410	1	Hose ASM
20	2412–34	1	Clamp–Hose
21	99–3017	1	Fitting
21:1	237–81	1	O–Ring
22	92–5821	1	Filter Head ASM

Ref. No.	Part No.	Qty.	Description
23	105–0438	1	Element–Filter
24	75–6820	1	Hourmeter
25	32144–18	2	Screw–HH
26	3255–7	1	Washer–Lock/Ext
27	340–142	1	Fitting–HYD, 90°
27:1	237–58	1	O–Ring
27:2	237–81	1	O–Ring
28	105–5471	1	Decal–Panel, Left Control
30	104–1476	1	Ring–Rubber
31	321–6	2	Screw–HH
32	105–4309	1	Plate–Filter
33	32104–116	1	Screw

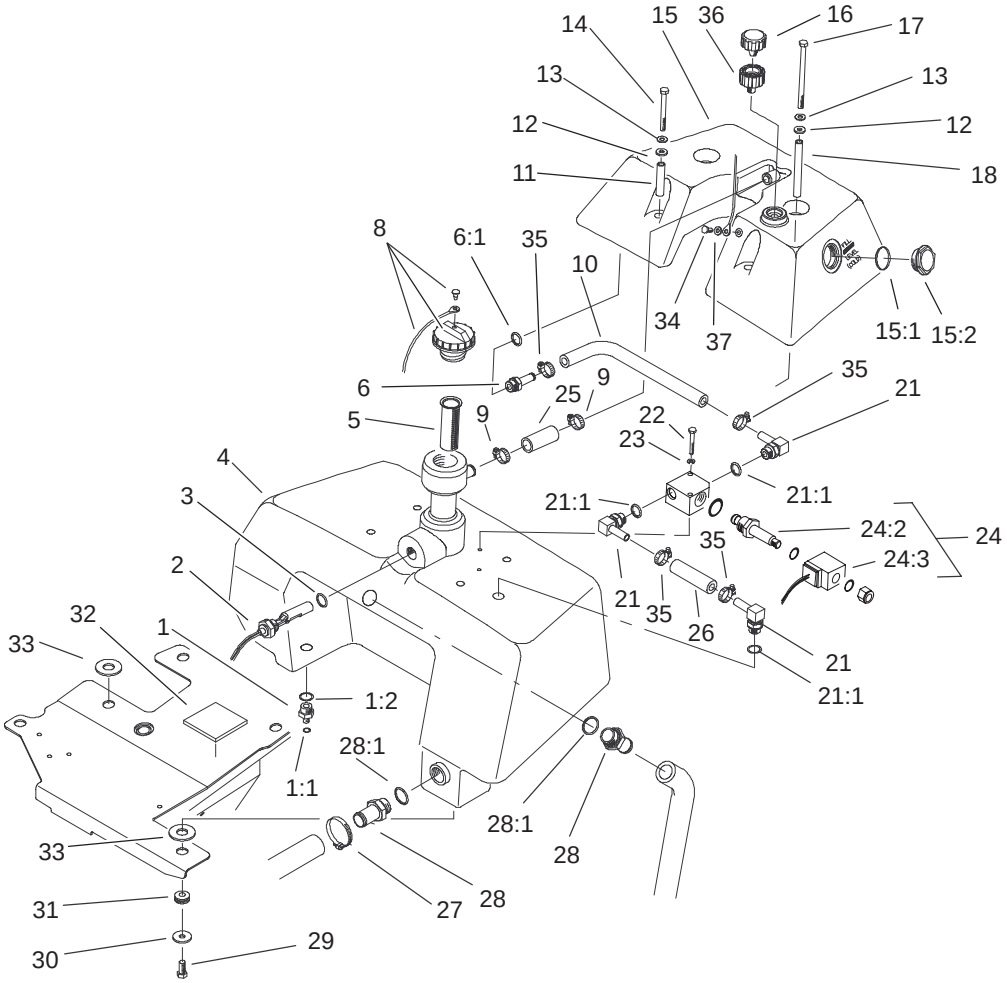

Sheet No.: 16

Hydraulic Reservoir and Leak Detector Assembly

Ref. No.	Part No.	Qty.	Description
1	340–3	1	Adapter
1:1	237–22	1	O–Ring
1:2	237–79	1	O–Ring
2	83–1450	1	Sensor–Level, Oil
3	237–80	1	O–Ring
4	105–9783	1	Tank–Hydraulic
5	83–1520	1	Screen–Filler
6	354–121	1	Fitting–HYD, Straight
6:1	237–79	1	O–Ring
8	93–7160	1	Cap–Oil, HYD
9	2412–141	2	Clamp–Drive, Worm
10	83–2070	1	Hose–Valve
11	83–1550	2	Spacer–Tube, Short
12	83–1470	4	Washer–Neoprene
13	3256–71	4	Washer–Flat
14	322–14	2	Screw–HH
15	83–2100	1	Tank–Auxiliary, HYD
15:1	94–8166	1	O–Ring
15:2	83–2250	1	Guage–Sight
16	68–6150	1	Breather
17	322–29	2	Screw–HH
18	83–1560	2	Spacer–Tube, Long
21	354–120	3	Fitting–HYD, 90°
21:1	237–79	1	O–Ring
22	321–11	2	Screw–HH
23	3253–3	2	Washer–Lock

Ref. No.	Part No.	Qty.	Description
24	83–1460	1	Solenoid Valve ASM
24:2	83–2000	1	Spool–Valve
24:3	83–2010	1	Coil–Valve
25	83–2090	1	Hose–Overflow
26	83–2080	1	Hose–Valve, Tank
27	2412–34	1	Clamp–Hose
28	83–0870	2	Fitting–Hose, Barbed
28:1	237–177	1	O–Ring
29	323–6	3	Screw–HH
30	63–8410	3	Washer
31	240–11	3	Bushing – Flange
32	83–2390	1	Pad–Tank
33	83–2400	2	Spacer
34	321–2	1	Screw–HH
35	2412–36	4	Clamp–Hose
36	92–8020	1	Adapter–Breather
37	3256–22	1	Washer–Flat

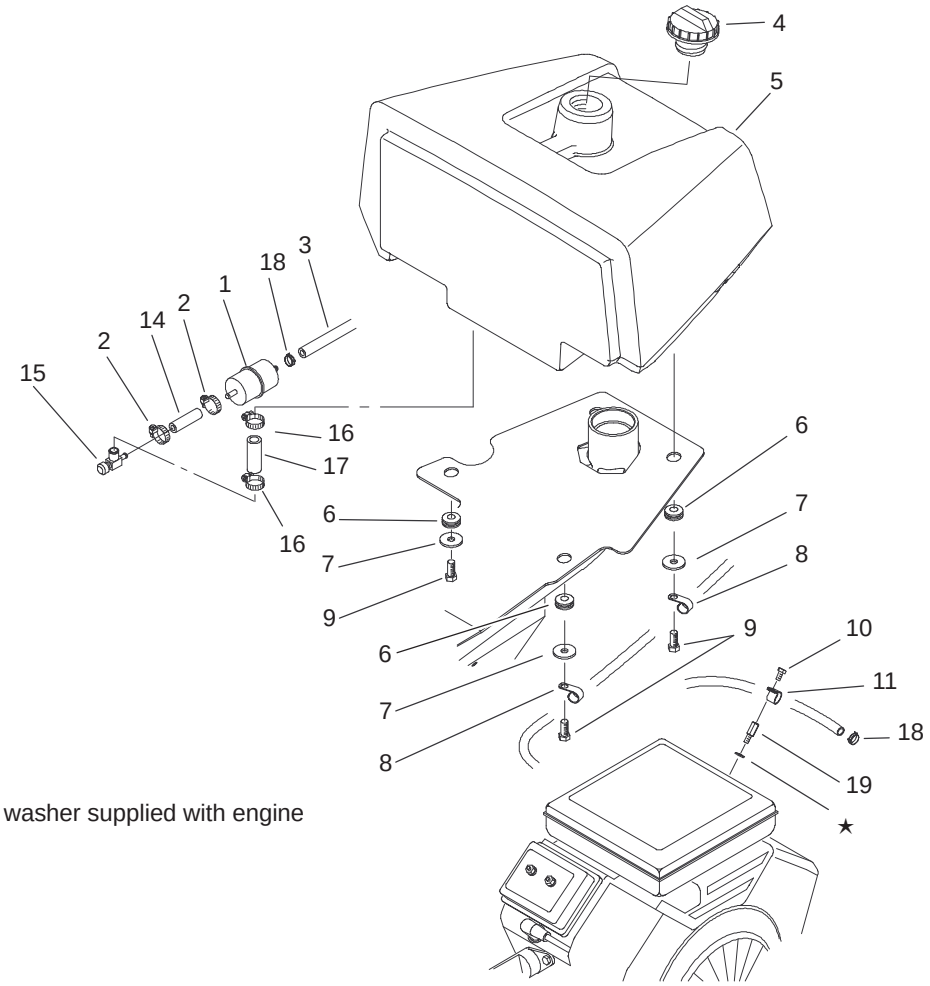

★ Fiber washer supplied with engine

Sheet No.: 17

Fuel Tank Assembly

Ref. No.	Part No.	Qty.	Description
1	94–2690	1	Filter–Fuel
2	2412–108	2	Clamp–Worm
3	83–2041	1	Hose–Fuel
4	93–7170	1	Cap–Fuel
5	105–8266	1	Tank–Fuel
6	240–11	4	Bushing – Flange
7	63–8410	4	Washer
8	2412–41	3	Clamp
9	323–6	4	Screw–HH
10	33113–012	1	Screw–HH
11	2412–94	1	Clamp
14	105–8342	1	Hose–Fuel
15	83–1390	1	Fitting–Shut–Off, Fuel
16	2412–36	2	Clamp–Hose
17	56–2230	1	Hose–Fuel
18	2412–98	2	Clamp
19	106–4616	1	Screw–Spacer

Ref. No.	Part No.	Qty.	Description

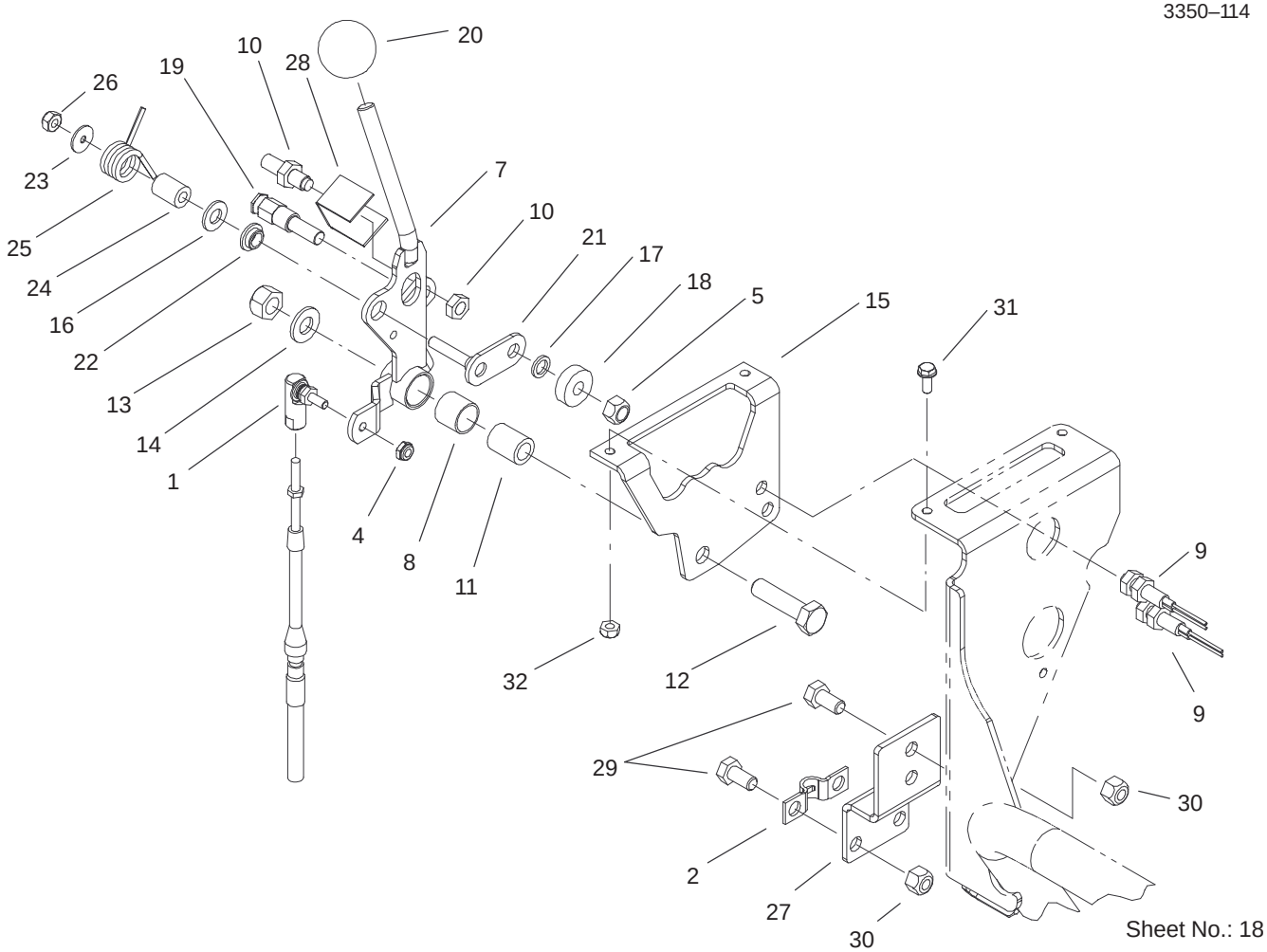

Speed Selector Lever Assembly

Ref. No.	Part No.	Qty.	Description
1	2411–38	1	Joint–Ball
2	93–2279	1	Clamp–Cable
4	3296–27	1	Nut–Lock NI
5	33024–00	1	Nut–Lock
7	94–9611	1	Handle
8	256–311	1	Bushing–Split
9	93–2055	2	Sensor–Switch, Reed
10	93–2056	1	Actuator–Switch, Reed
11	94–1378	1	Tube–Pivot, Handle
12	33115–040	1	Screw–HH
13	33025–00	1	Nut–Lock
14	3256–24	1	Washer–Flat
15	94–6398	1	Bracket–Traction
16	3256–23	1	Washer–Flat
17	75–5470	1	Spacer–Bearing
18	251–259	1	Bearing–Ball
19	94–9617	1	Pin–Spring
20	233–42	1	Knob
21	94–9614	1	Pivot–Roller
22	94–9619	1	Bushing
23	3256–67	1	Washer–Flat
24	94–9618	1	Spacer–Spring
25	94–9620	1	Spring–Torsion
26	33023–00	1	Nut–Lock
27	105–5417–03	1	Bracket–Cable, Shifter
28	106–6356	1	Shield–Switch

Ref. No.	Part No.	Qty.	Description
29	322–2	4	Screw–HH
30	3296–29	4	Nut–Lock, NI
31	3290–321	2	Screw–HWH
32	3296–12	2	Nut–Lock

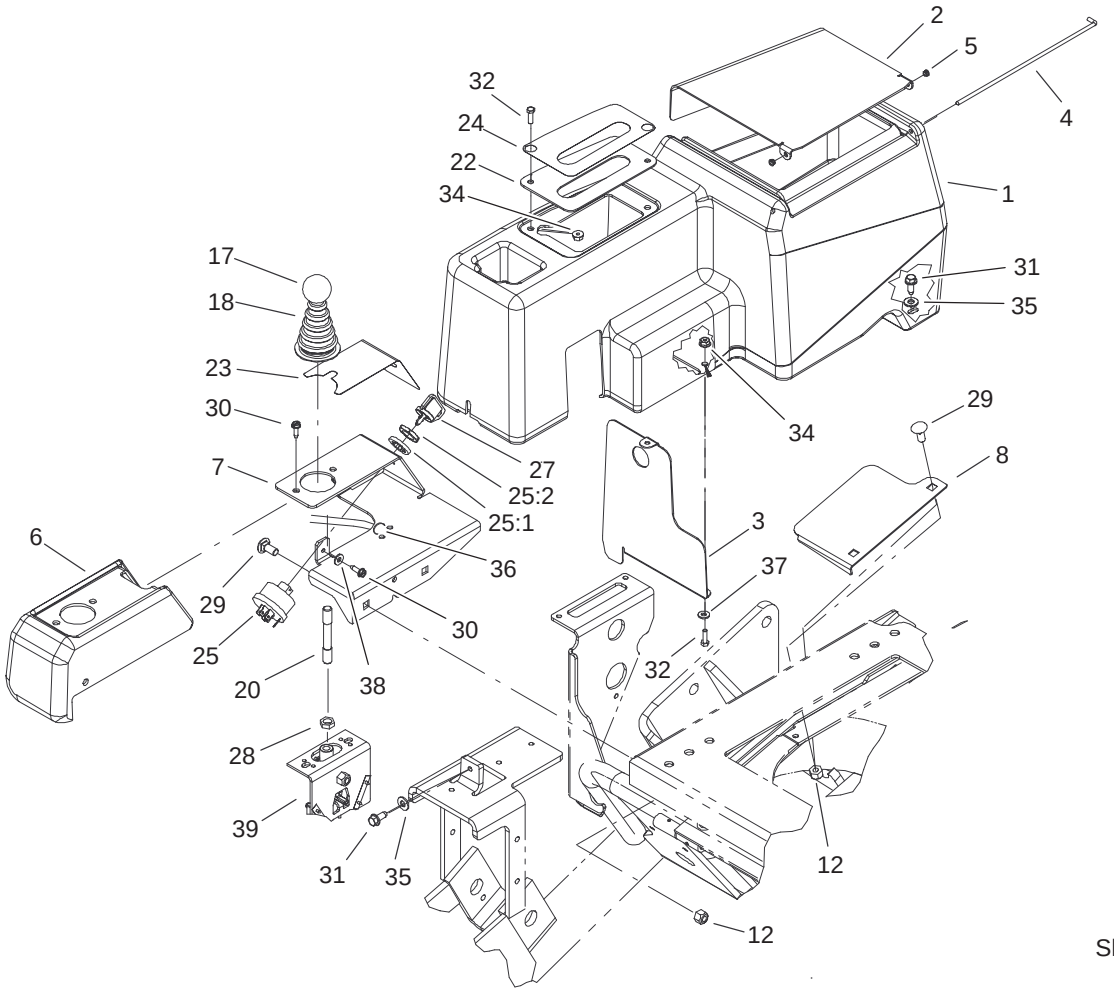

Sheet No.: 19

Joystick and Console Assembly

Ref. No.	Part No.	Qty.	Description
1	105–8250	1	Console
2	105–8254–03	1	Lid–Console
3	105–8255–03	1	Baffle–Console
4	105–8256	1	Rod–Hinge
5	105–8283	2	Bushing
6	105–8251	1	Pod
7	105–8252–03	1	Bracket–Pod
8	105–8284–03	1	Shield–Valve
12	3296–29	4	Nut–Lock, NI
17	233–42	1	Knob
18	93–5961	1	Boot–Lever
20	105–8288	1	Rod–Joystick
22	105–8280–03	1	Plate–Console
23	105–8305	1	Decal–Panel, Control
24	105–8306	1	Decal–Selector, Speed
25	88–9830	1	Key Switch ASM
25:1	3254–5	1	Washer–Tooth
25:2	218–461	1	Nut–HH
27	63–8360	2	Key–Ignition
28	3218–3	1	Nut–Jam
29	3230–1	4	Bolt–CARR
30	32144–19	4	Screw–SHWH
31	32144–10	3	Screw–HWH
32	3290–134	4	Screw
34	3290–148	4	Nut–HF
35	3256–22	3	Washer–Flat

Ref. No.	Part No.	Qty.	Description
36	3290–378	1	Tie–Cable
37	3256–77	2	Washer–Flat
38	3256–14	2	Washer–Flat
☆39		1	Joystick Bracket ASM

☆ Not serviced separately

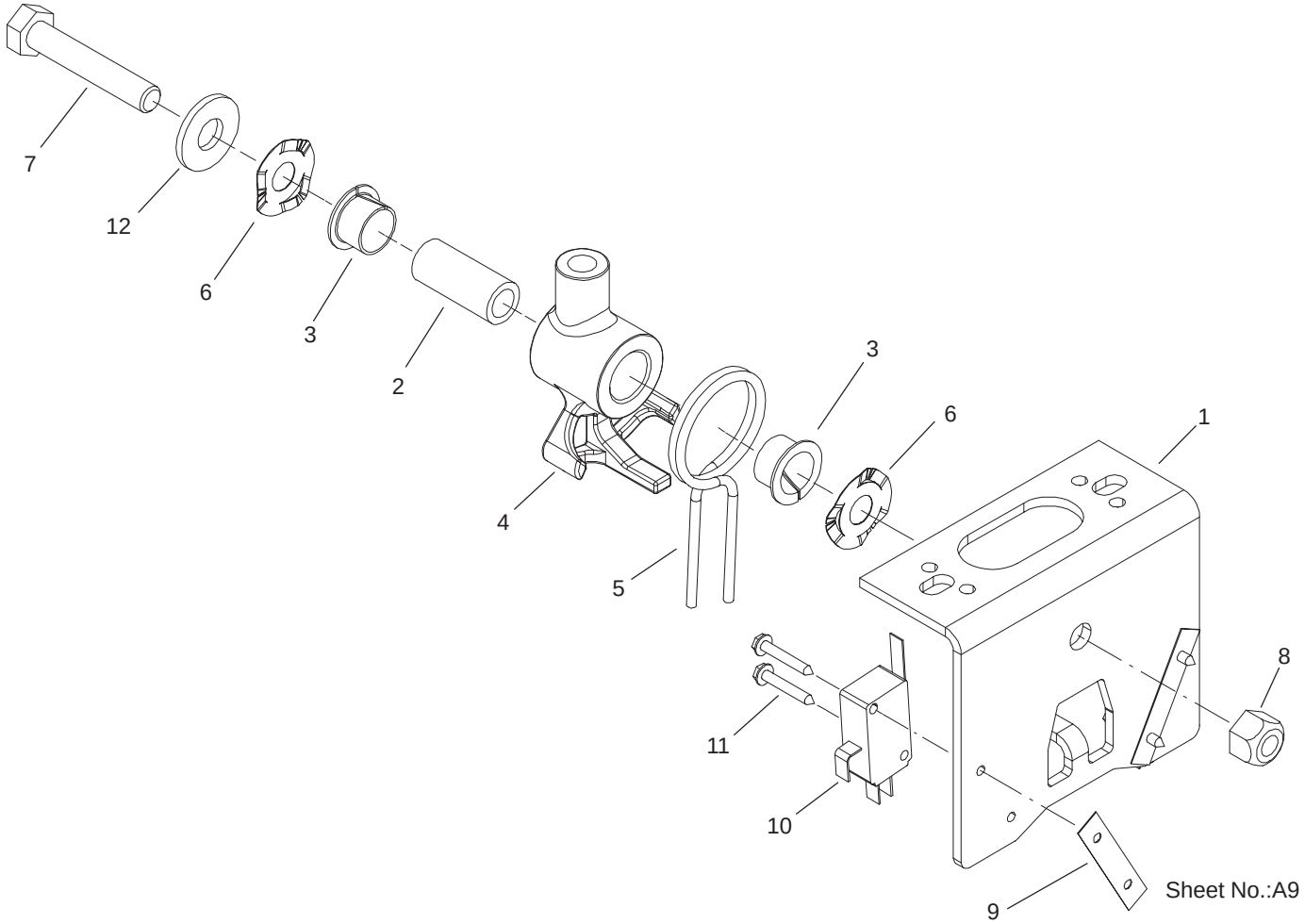

Joystick Bracket Assembly

Ref. No.	Part No.	Qty.	Description
1	106–4168–03	1	Bracket–Joystick
2	106–4192	1	Spacer
3	93–5547	2	Bushing–Nylon
4	105–7507	1	Hub–Pivot, Joystick
5	105–8289	1	Spring–Torsion
6	106–4193	2	Washer–Finger, Spring
7	322–9	1	Screw–HH
8	3296–29	1	Nut–Lock, NI
9	3290–354	2	Nut–Speed
10	111332	2	Switch
11	147665	4	Screw–HH
12	3256–3	1	Washer–Flat

Ref. No.	Part No.	Qty.	Description

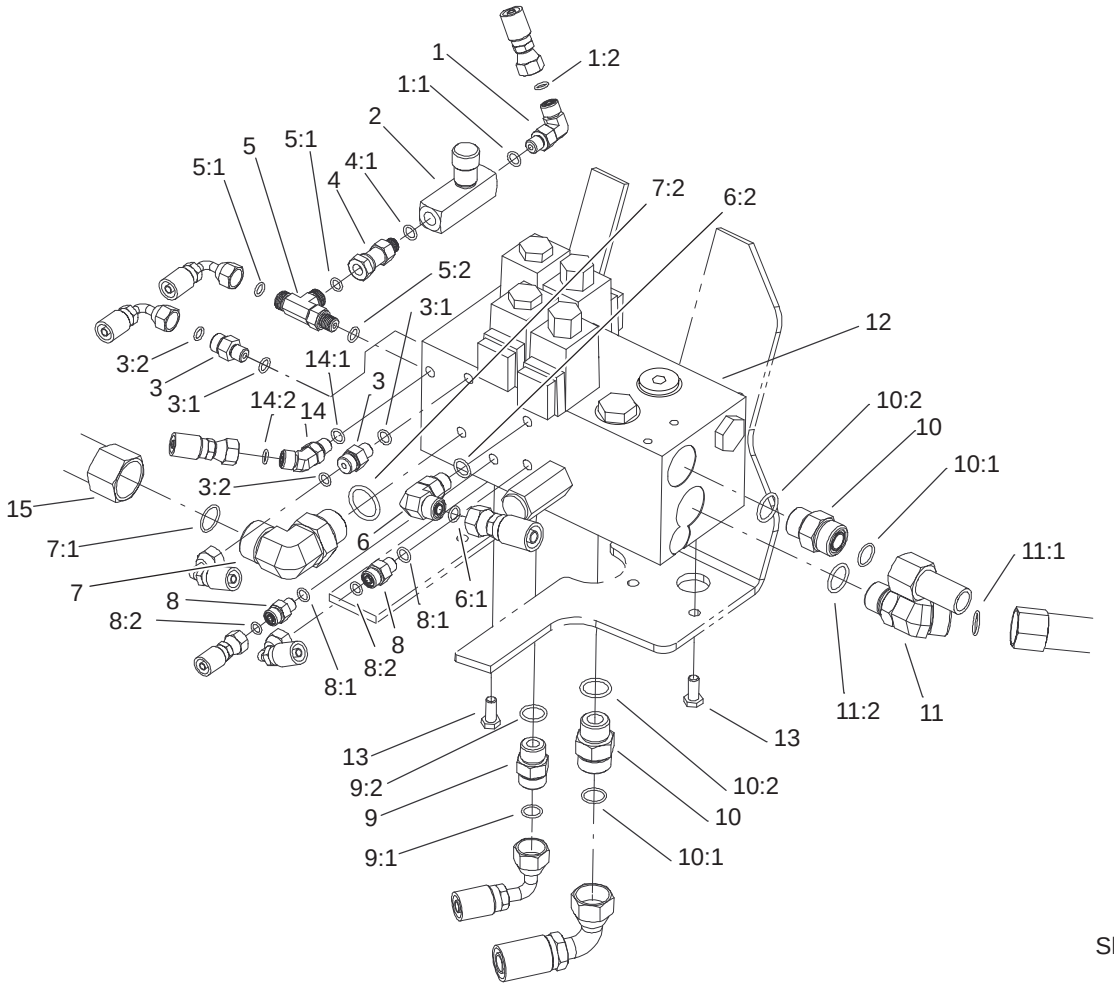

Sheet No.: 24

Hydraulic Manifold Assembly

Ref. No.	Part No.	Qty.	Description
1	340–132	1	Fitting–HYD, 90°
1:1	237–78	1	O–Ring
1:2	237–21	1	O–Ring
2	93–7489	1	Orifice Valve ASM
3	95–1639	2	Fitting–HYD
3:1	237–78	1	O–Ring
3:2	237–21	1	O–Ring
4	104–3777	1	Connector–Swivel, Straight
4:1	237–78	1	O–Ring
5	340–140	1	Adapter–Tee
5:1	237–21	2	O–Ring
5:2	237–78	1	O–Ring
6	340–77	1	Fitting–HYD, 90°
6:1	237–22	1	O–Ring
6:2	237–42	1	O–Ring
7	340–142	1	Fitting–HYD, 90°
7:1	237–58	1	O–Ring
7:2	237–81	1	O–Ring
8	340–92	2	Fitting–HYD, Straight
8:1	237–78	1	O–Ring
8:2	237–21	1	O–Ring
9	340–4	1	Fitting–HYD, Sraight
9:1	237–30	1	O–Ring
9:2	237–79	1	O–Ring
10	340–7	2	Adapter

Ref. No.	Part No.	Qty.	Description
10:1	237–65	1	O–Ring
10:2	237–80	1	O–Ring
11	340–14	1	Fitting–HYD, 45°
11:1	237–65	1	O–Ring
11:2	237–80	1	O–Ring
12	106–9005	1	Manifold ASM
13	33114–016	2	Screw–HH
14	340–103	1	Fitting–HYD, 45°
14:1	237–78	1	O–Ring
14:2	237–21	1	O–Ring
15	105–5460	1	Tube–HYD, Manifold/Filter

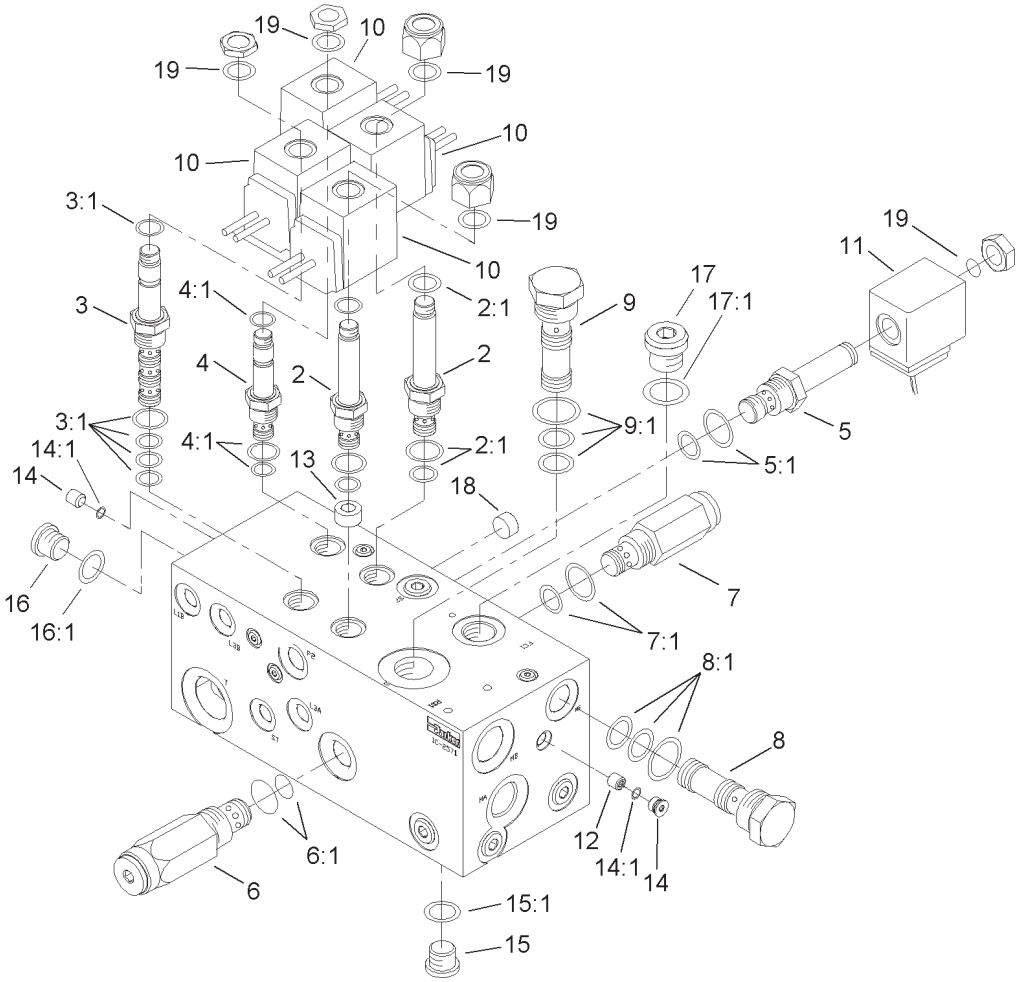

Sheet No.:B1

Manifold Assembly No. 106–9005

Ref. No.	Part No.	Qty.	Description
2	93–7494	2	Cartridge
2:1	75–2080	1	Seal Kit
3	94–2627	1	Cartridge
3:1	95–5642	1	Seal Kit
4	92–6315	1	Cartridge–N.c., Poppet
4:1	104–0004	1	Cartridge Seal Kit
5	106–9087	1	Spool–Type, Stem
5:1	105–3334	1	Seal Kit
☆5:1:1		1	O–Ring
☆5:1:2		1	O–Ring
☆5:1:3		2	Ring–Backup
6	95–1601	1	Cartridge–Relief
6:1	95–5645	1	Seal Kit
☆6:1:1		1	O–Ring
☆6:1:2		1	O–Ring
7	94–6351	1	Cartridge–Relief
7:1	95–5645	1	Seal Kit
☆7:1:1		1	O–Ring
☆7:1:2		1	O–Ring
8	94–6353	1	Plug–Cavity
8:1	69–4240	1	Seal Kit
9	94–6352	1	Plug–Cavity
9:1	104–7730	1	Seal Kit
10	88–9190	4	Solenoid Coil Kit
11	106–9086	1	Solenoid Coil
12	106–9084	1	Plug–Orifice

Ref. No.	Part No.	Qty.	Description
13	106–9083	1	Plug–Orifice
14	353–991	8	Plug–Hex, Hollow
14:1	237–156	1	O–Ring
15	353–989	7	Plug–Hex, Hollow
15:1	237–42	1	O–Ring
16	353–988	1	Plug–Hex, Hollow
16:1	237–79	1	O–Ring
17	354–70	1	Plug–Hex, Hollow
17:1	237–80	1	O–Ring
19	94–5438	8	Seal–Solenoid

☆ Not serviced separately

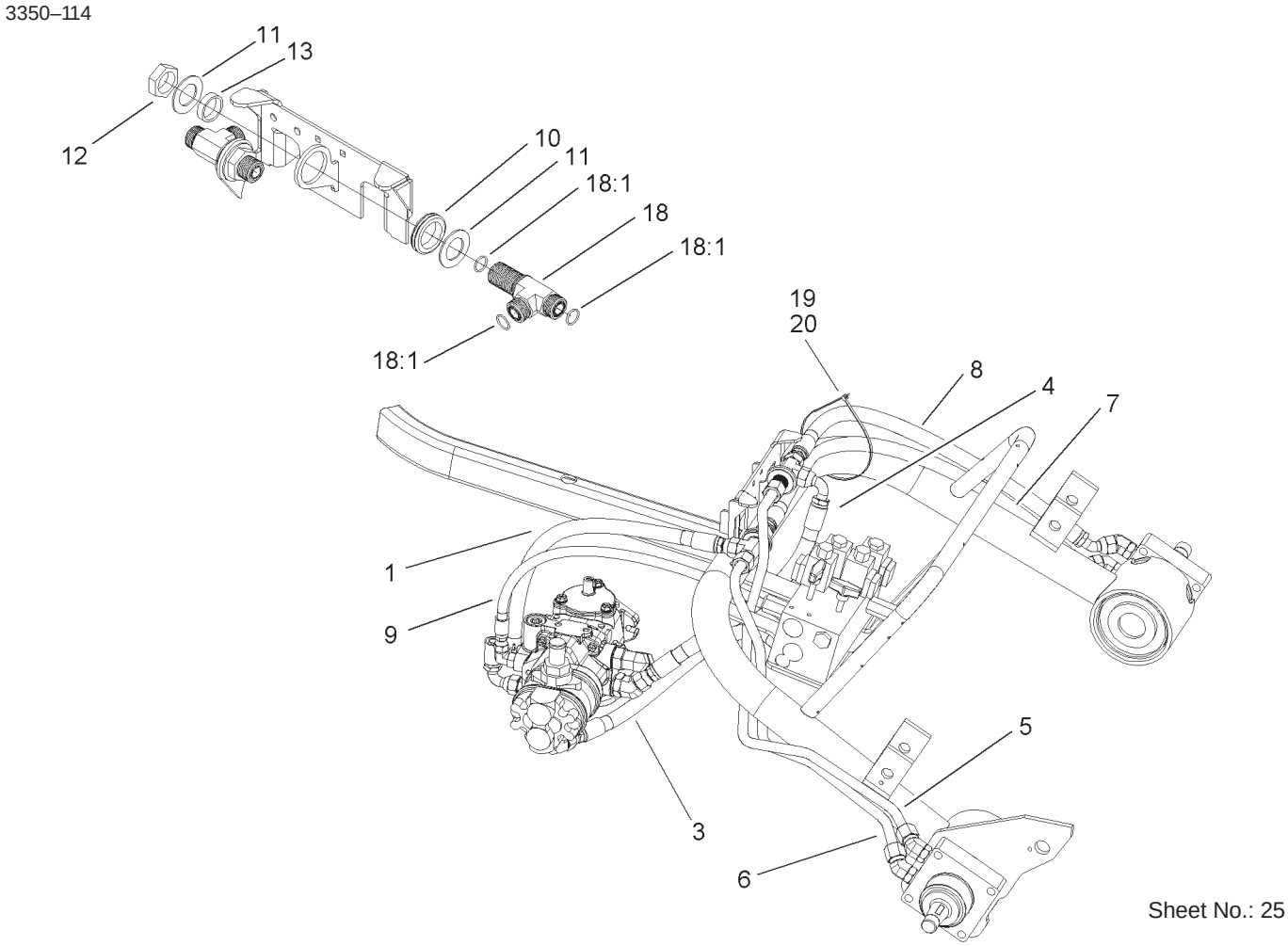

Hydraulic Traction Assembly

Ref. No.	Part No.	Qty.	Description
1	99–6193	1	Hose ASM
3	105–4342	1	Hose ASM
4	105–4332	1	Hose ASM
5	105–5490	1	Tube–HYD
6	105–5489	1	Tube–HYD
7	105–4333	1	Hose ASM
8	105–4336	1	Hose ASM
9	105–4343	1	Hose ASM
10	240–3	2	Grommet–Rubber
11	69–9010	4	Washer
12	340–74	2	Locknut–Bulkhead
13	69–9000	2	Spacer
18	94–5350	2	Tee–Bulkhead
18:1	237–65	3	O–Ring
19	3290–378	1	Tie–Cable
20	3290–379	1	Tie–Cable

Ref. No.	Part No.	Qty.	Description

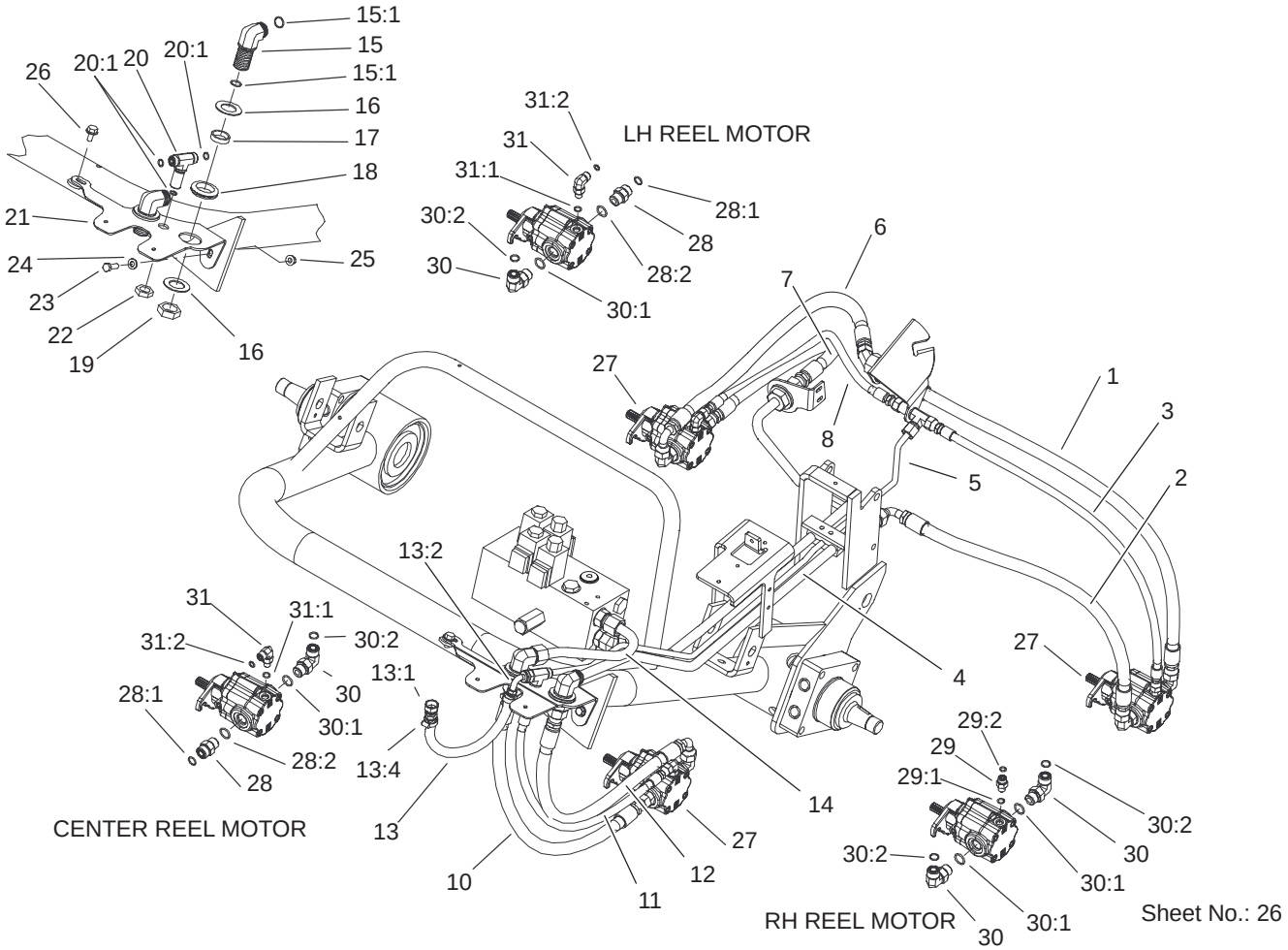

Hydraulic Reel Drive Assembly

Ref. No.	Part No.	Qty.	Description
1	95–2908	1	Hose ASM
2	105–5404	1	Hose ASM
3	105–5405	1	Hose ASM
4	105–5493	1	Tube–HYD
5	105–4327	1	Tube–HYD, Casedrain
6	95–2909	1	Hose ASM
7	105–5407	1	Hose ASM
8	105–5408	1	Hose ASM
10	105–5400	1	Hose ASM
11	105–5402	1	Hose ASM
12	105–5401	1	Hose ASM
13	105–5409	1	Hose ASM
13:1	105–8311	1	Fitting–HYD
13:2	105–8312	1	Fitting–HYD, 90
13:4	2412–141	2	Clamp–Drive, Worm
14	105–5482	1	Tube–HYD, Manifold/Center Reel
15	340–72	2	Fitting–HYD, Bulkhead, 90°
15:1	237–65	2	O–Ring
16	69–9010	4	Washer
17	69–9000	2	Spacer
18	240–3	2	Grommet–Rubber
19	340–74	2	Locknut–Bulkhead
20	105–8281	1	Tee–Bulkhead
20:1	237–22	3	O–Ring

Ref. No.	Part No.	Qty.	Description
21	105–8253–01	1	Bracket–Bulkhead
22	340–70	1	Nut–Lock
23	322–5	1	Screw–HH
24	3256–23	1	Washer–Flat
25	32128–20	1	Nut–HF
26	32144–14	1	Screw–HWH
27	100–6426	3	HYD Motor ASM
28	340–4	2	Fitting–HYD, Sraight
28:1	237–30	1	O–Ring
28:2	237–79	1	O–Ring
29	340–92	1	Fitting–HYD, Straight
29:1	237–78	1	O–Ring
29:2	237–21	1	O–Ring
30	340–98	4	Fitting–HYD, 90°
30:1	237–79	1	O–Ring
30:2	237–30	1	O–Ring
31	340–132	2	Fitting–HYD, 90°
31:1	237–78	1	O–Ring
31:2	237–21	1	O–Ring

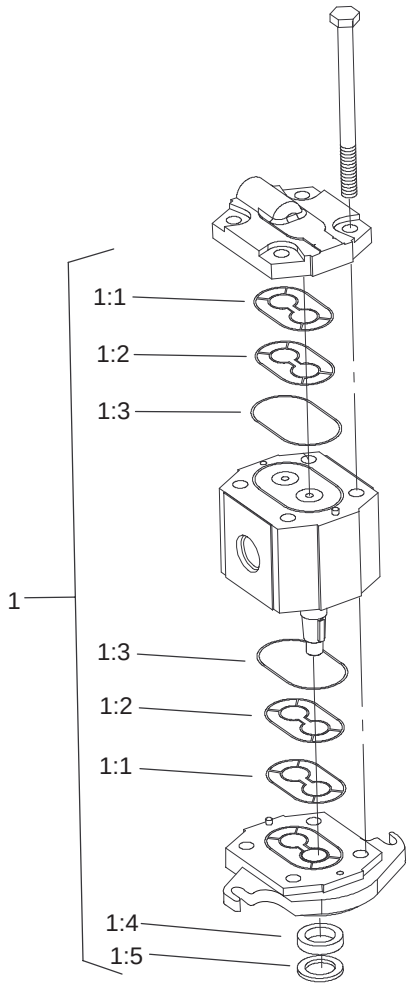

Parts not listed in part list are not serviced separately

Sheet No.: B2

Reel Motor Assembly No. 100–6426

Ref. No.	Part No.	Qty.	Description
1	105–9758	1	Seal Kit
☆1:1		2	Seal–Extrusion, Anti
☆1:2		2	Seal–Pressure
☆1:3		2	O–Ring
☆1:4		1	Seal–Shaft
☆1:5		1	Washer–Backup

Ref. No.	Part No.	Qty.	Description

☆ Not serviced separately

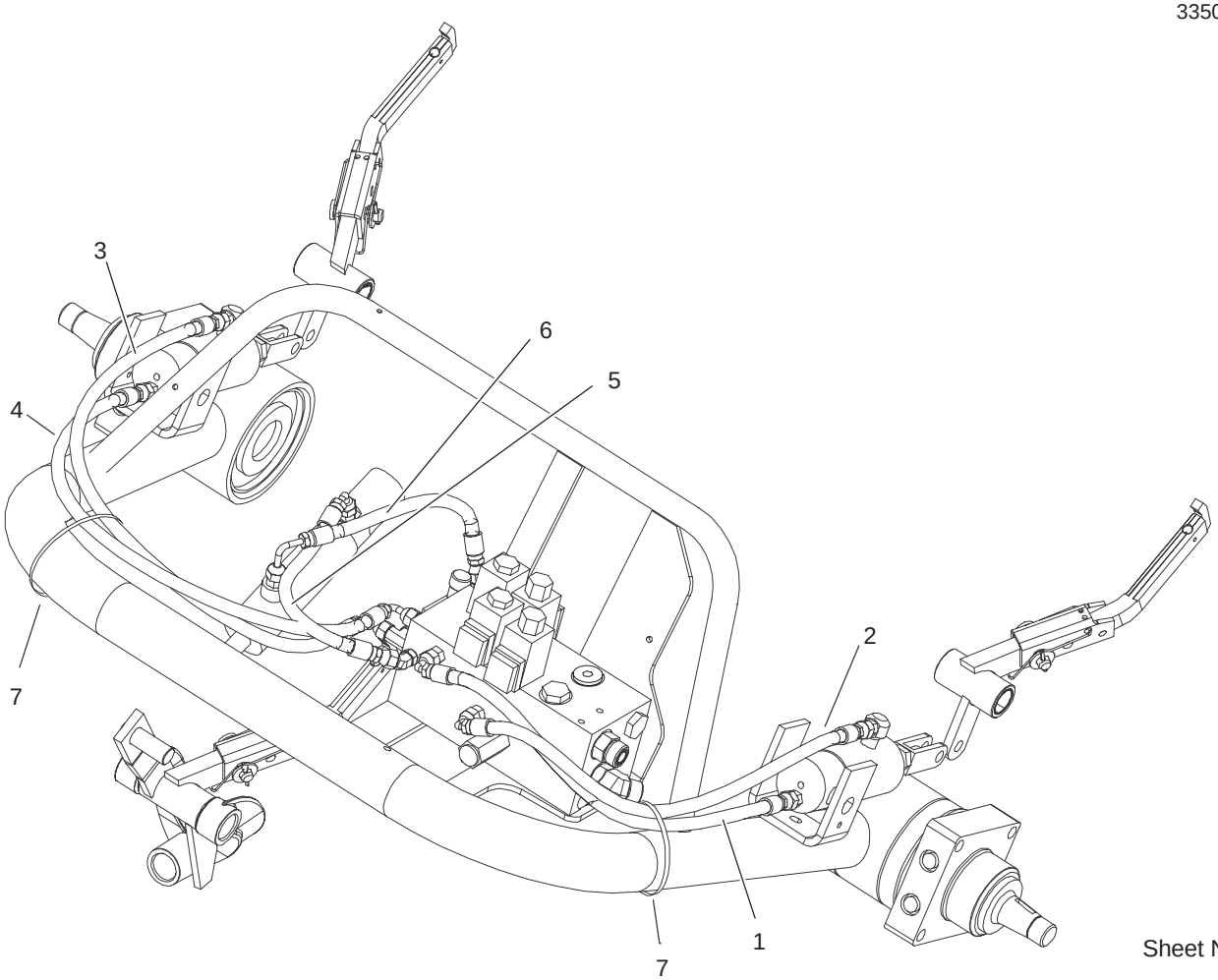

Sheet No.: 27

Hydraulic Lift Assembly

Ref. No.	Part No.	Qty.	Description
1	105–4346	1	Hose ASM
2	105–4347	1	Hose ASM
3	100–3833	1	Hose ASM
4	95–8837	1	Hose ASM
5	105–4344	1	Hose ASM
6	105–4345	1	Hose ASM
7	3290–379	2	Tie–Cable

Ref. No.	Part No.	Qty.	Description

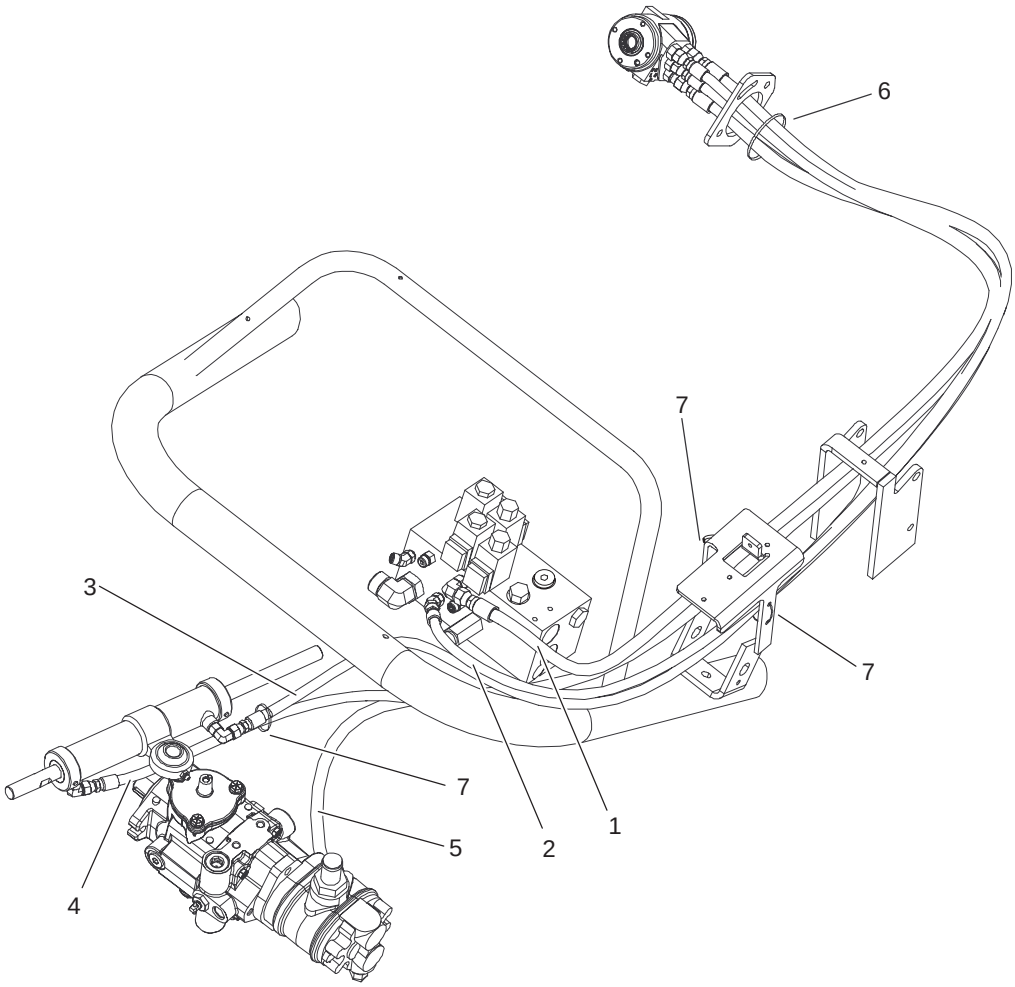

Sheet No.: 28

Hydraulic Steering Assembly

Ref. No.	Part No.	Qty.	Description
1	105–4339	1	Hose ASM
2	105–4338	1	Hose ASM
3	105–4337	1	Hose ASM
4	100–4892	1	Hose ASM
5	105–4340	1	Hose ASM
6	3334–945	1	Tie–Cable
7	3290–378	3	Tie–Cable

Ref. No.	Part No.	Qty.	Description

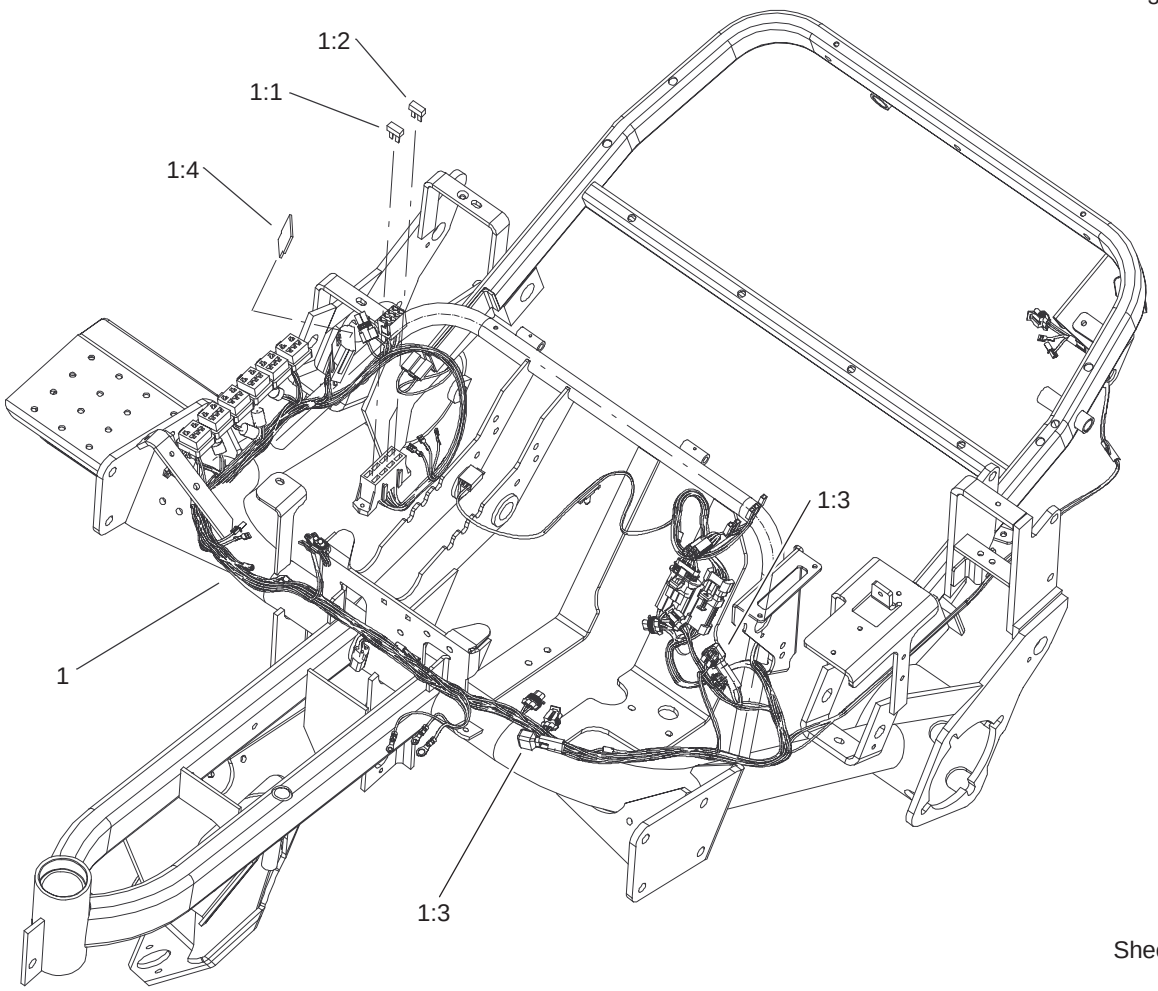

Sheet No.: 30

Wire Harness Routing Assembly

Ref. No.	Part No.	Qty.	Description
1	106–9006	1	Wire–Harness, Gr3150 Main
1:1	218–578	2	Fuse–10 Amp
1:2	109101	1	Fuse–20 Amp
1:3	100–4918	2	Diode
1:4	92–3188	1	Diode–Board, Circuit
1:5	106–4641	1	Harness–Wire, Fusible Link

Ref. No.	Part No.	Qty.	Description

Hydraulic Schematic

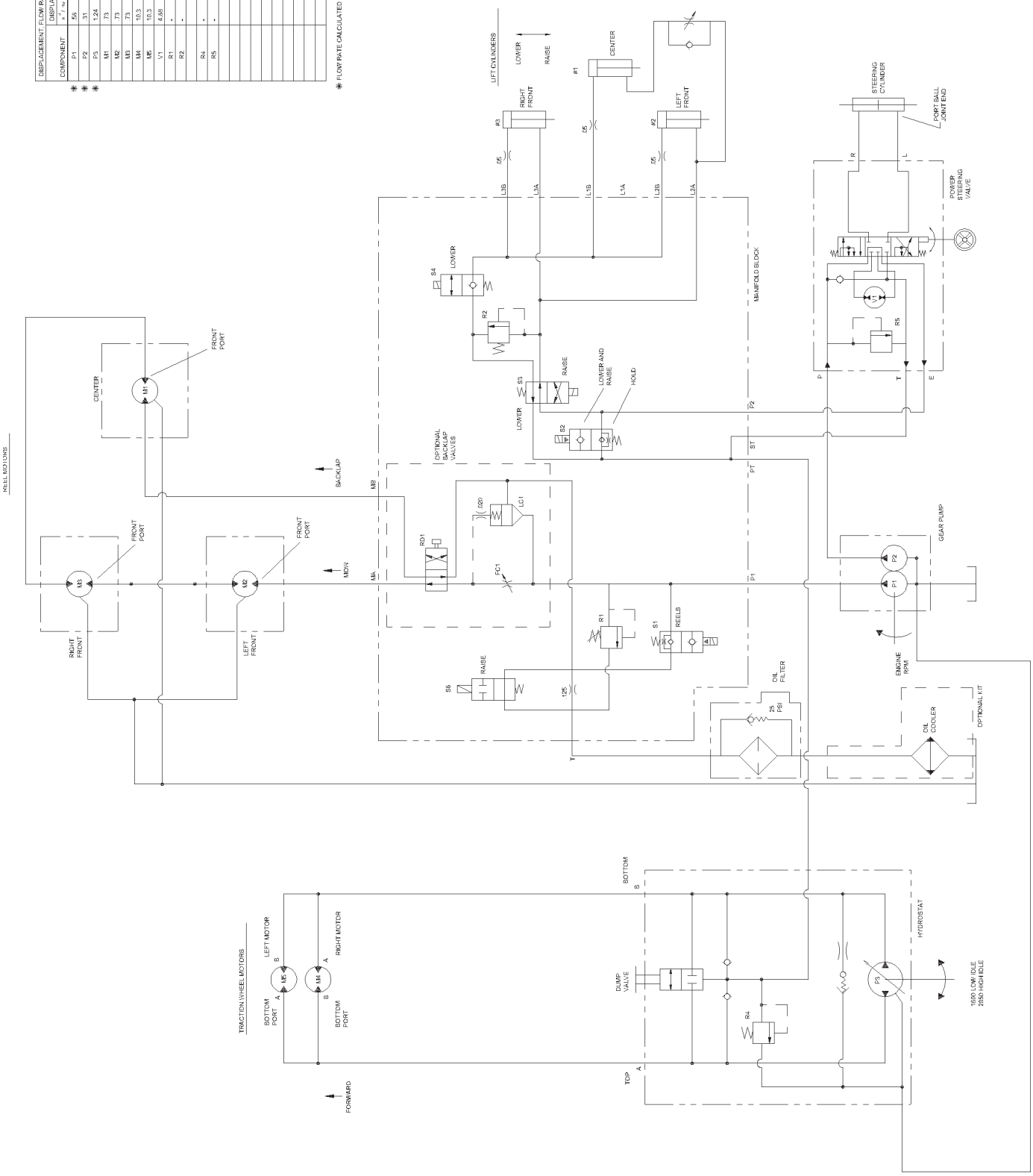

DISPLACEMENT: FLOW RATE AND PRESSUR E CHART

COMPONENT	DISPLACEMENT cm^3/rev	DISPLACEMENT in^3/rev	PRESSURE kN/m^2	PRESSURE BARS	FLOW RATE GPM	FLOW RATE LPM
P1	56	8.5	-	-	6.9	26.1
P2	31	5.1	-	-	3.7	13.9
P3	1.24	20.3	-	-	14.8	55.8
M1	73	12.0	-	-	-	-
M2	73	12.0	-	-	-	-
M3	73	12.0	-	-	-	-
M4	10.3	168.8	-	-	-	-
M5	10.3	168.8	-	-	-	-
V1	4.86	80	-	-	-	-
R1	-	-	2400	165	-	-
R2	-	-	400	21	-	-
R4	-	-	100	7	-	-
R5	-	-	1150	79	-	-

✱✱✱ FLOW RATE CALCULATED AT 2850 RPM AND 95 EFFICIENCY

Electrical Schematic

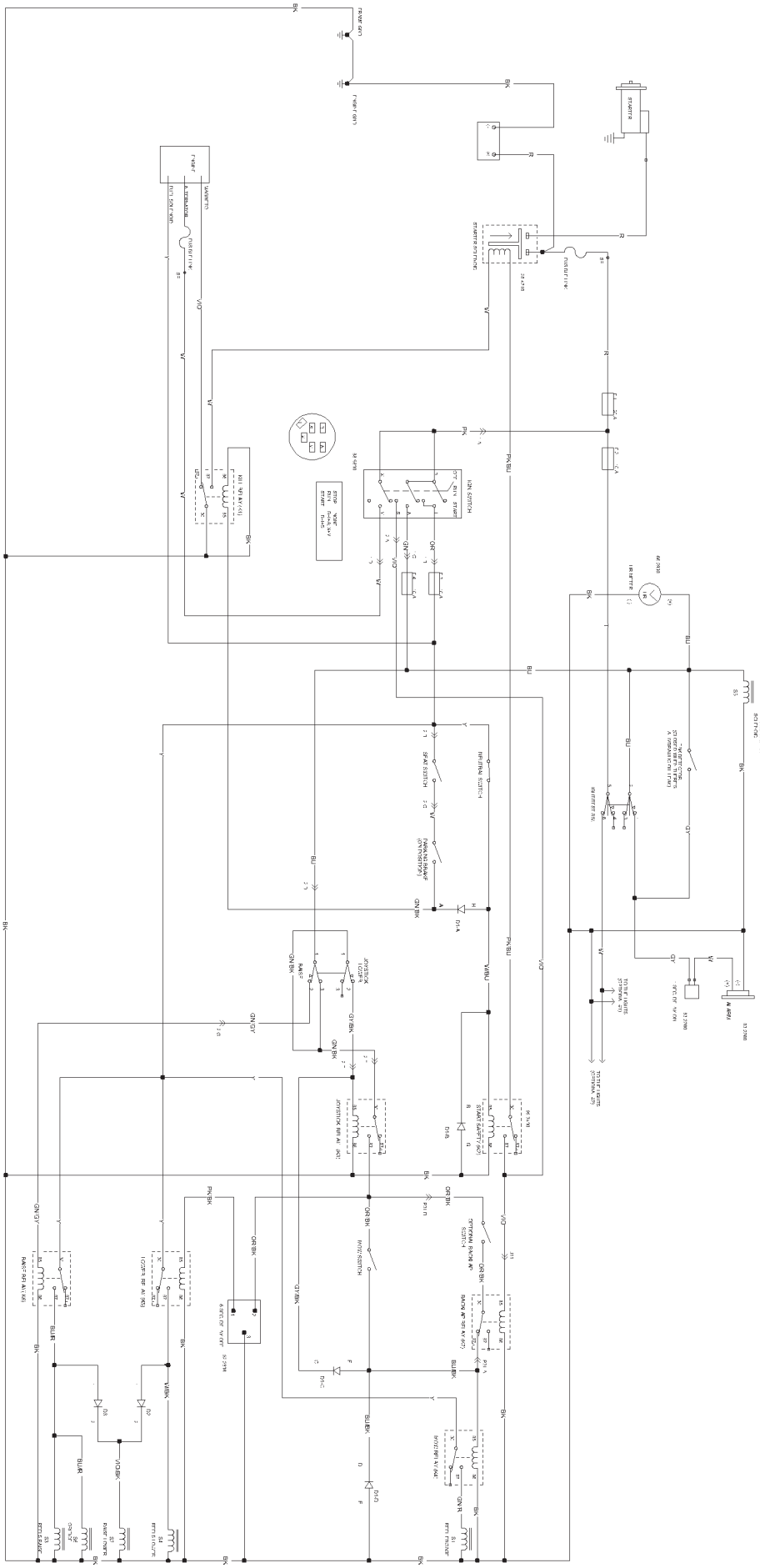

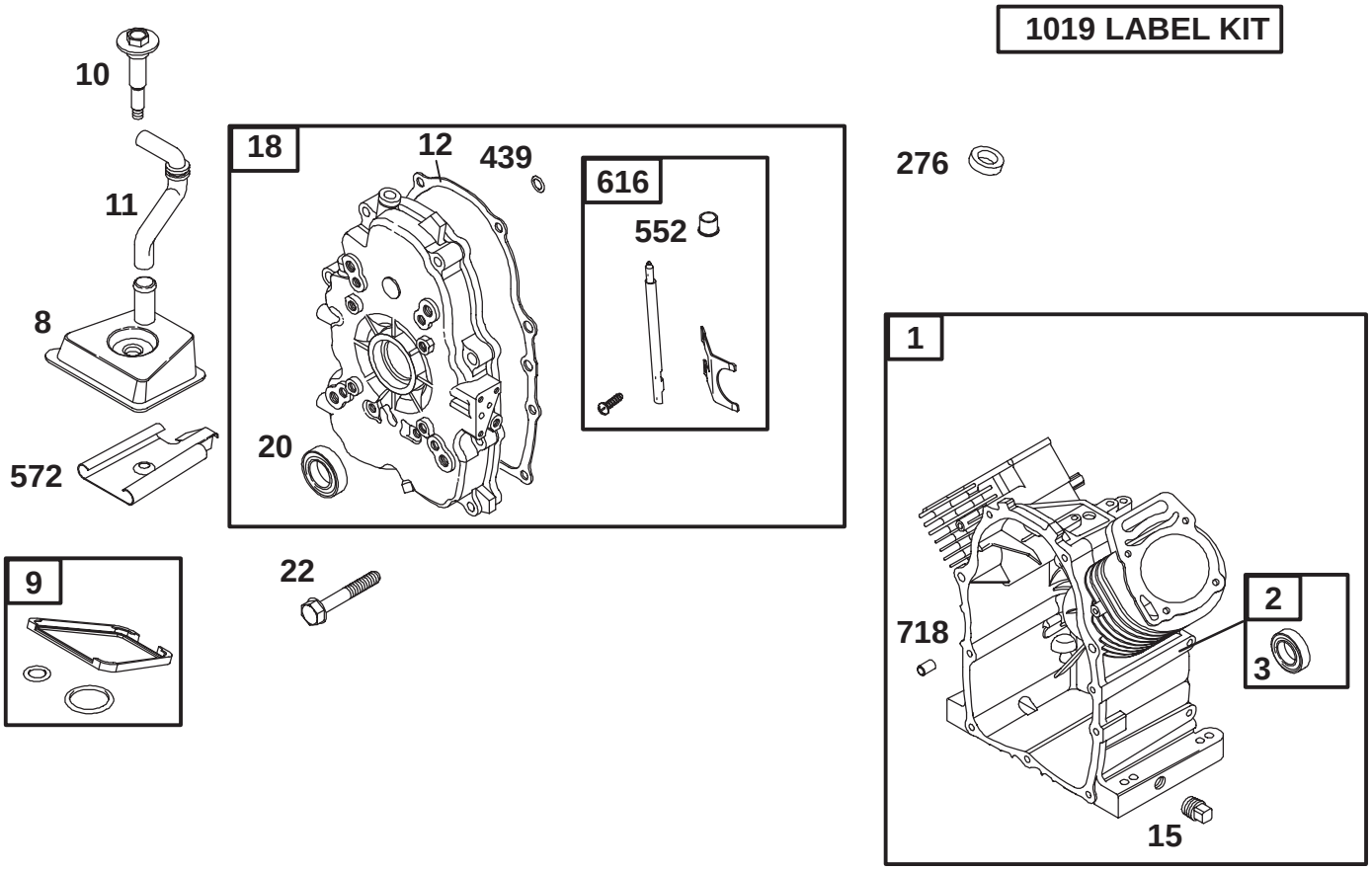

Assemblies include all parts shown in frames.

Cylinder Assembly
Briggs and Stratton Model 350447–1331–E1

Ref. No.	Part No.	Qty.	Description
1	692544	1	Cylinder Assembly
2	808534	1	Bearing/Seal Kit
★3	805101	1	Oil Seal
8	808984	1	Breather Assembly
Δ★9	809094	1	Valve Cover Gasket
10	690751	1	Screw (Breather Assembly)
11	806083	1	Breather Tube
★12	691684	1	Crankcase Gasket
15	690946	1	Oil Drain Plug
18	808847	1	Crankcase Cover
★20	805049	1	Oil Seal
22	692540	1	Screw (Crankcase Gasket)
276	690704	1	Sealing Washer
★439	692154	1	O Ring Seal (Crankcase Cover)
552	806686	1	Governor Crank Bushing
572	690686	1	Breather Baffle
616	806685	1	Governor Crank
718	806469	1	Locating Pin
1019	808036	1	Label Kit

Ref. No.	Part No.	Qty.	Description

Δ Included in Valve Gasket Set–Ref. 1095.
★ Included in Engine Gasket Set–Ref. 358.

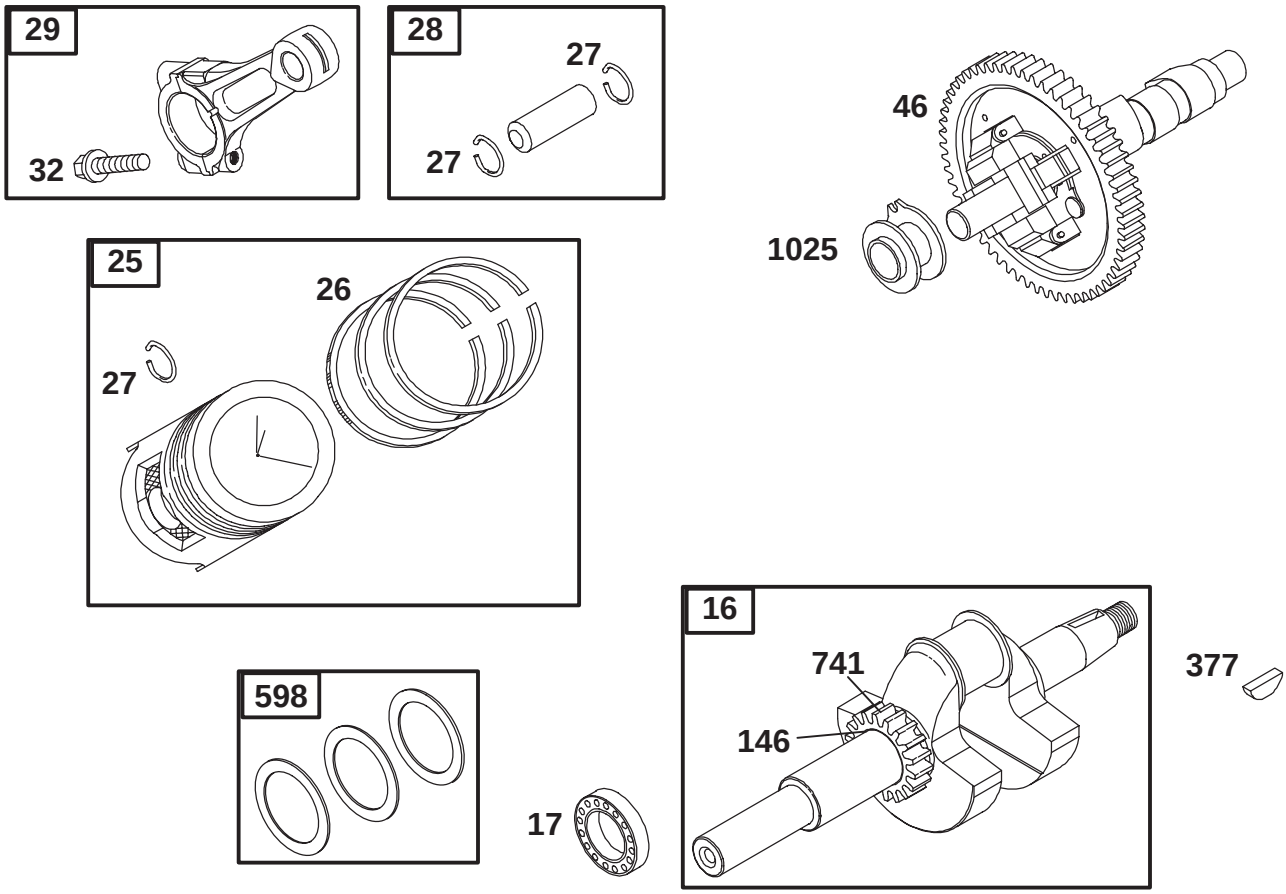

Assemblies include all parts shown in frames.

Crankshaft Assembly
Briggs and Stratton Model 350447–1331–E1

Ref. No.	Part No.	Qty.	Description
16	692171	1	Crankshaft
17	690752	1	Ball Bearing
25	808326	1	Piston Assembly (Standard)
	808336	1	Piston Assembly (.010 O.S.)
	808337	1	Piston Assembly (.020 O.S.)
	808338	1	Piston Assembly (.030 O.S.)
26	807889	1	Ring Set (Standard)
	807994	1	Ring Set (.010 O.S.)
	807995	1	Ring Set (.020 O.S.)
	807996	1	Ring Set (.030 O.S.)
27	690683	1	Piston Pin Lock
28	807886	1	Piston Pin (Standard)
29	807900	1	Connecting Rod (Standard)
	807803	1	Connecting Rod (.020 Undersize)
32	690698	1	Screw (Connecting Rod 1 7/8”)
46	691557	1	Camshaft

Ref. No.	Part No.	Qty.	Description
146	691639	1	Timing Key
377	808095	1	Woodruff Key
598	807625	1	End Play Shim
741	691530	1	Timing Gear
1025	690689	1	Governor Spool

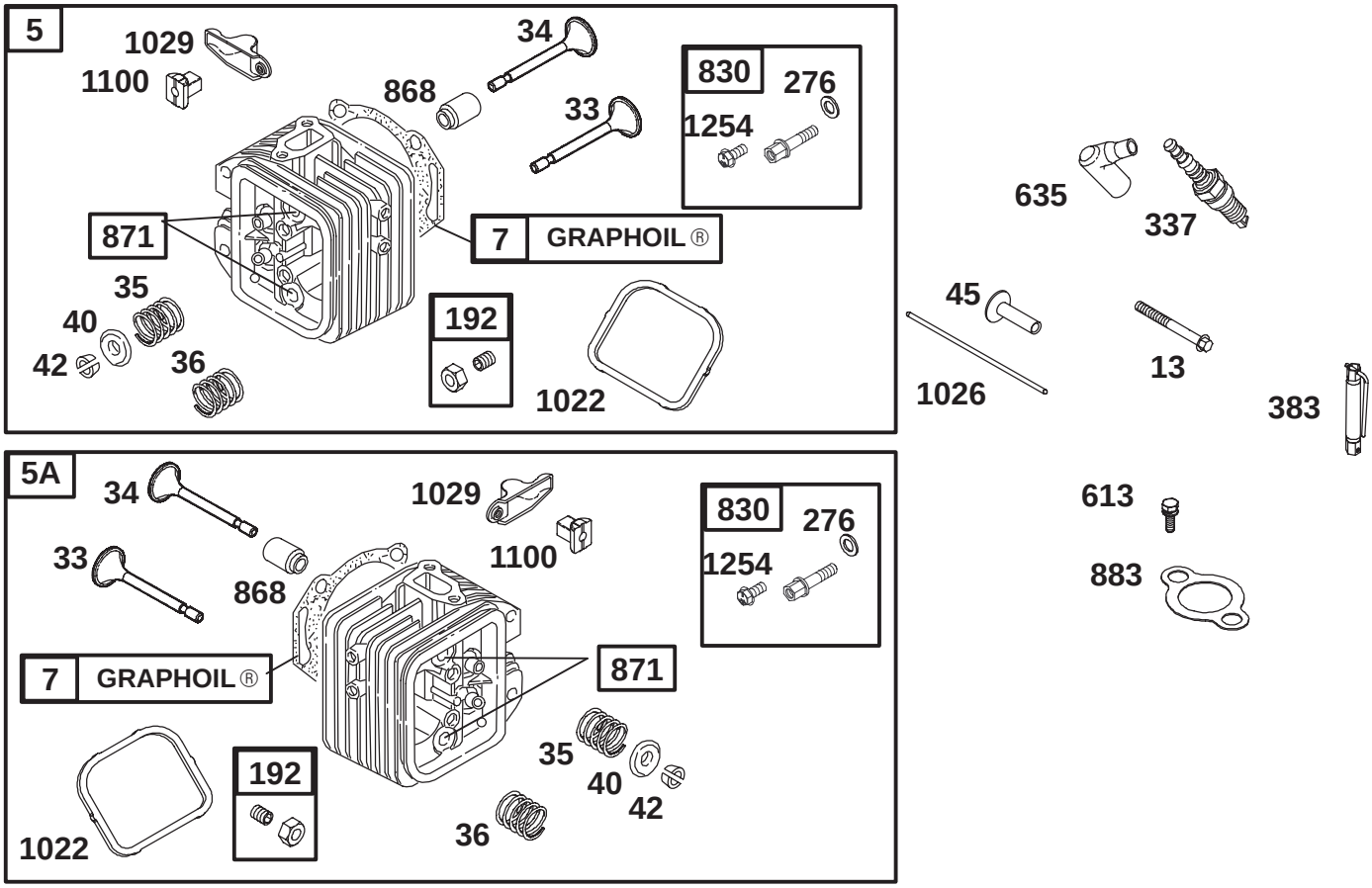

Assemblies include all parts shown in frames.

Cylinder Head Assembly
Briggs and Stratton Model 350447–1331–E1

Ref. No.	Part No.	Qty.	Description
5	809185	1	Cylinder Head (No. 1) (Used After Date Code 01120200)
5A	809186	1	Cylinder Head (No. 2) (Used After Date Code 01120200)
Δ★7	690888	1	Cylinder Head Gasket
13	692059	1	Screw (Cylinder Head)
33	807681	1	Exhaust Valve
34	807680	1	Intake Valve
35	692084	1	Valve Spring (Intake)
36	692084	1	Valve Spring (Exhaust)
40	692058	1	Valve Retainer
42	807683	1	Valve Retainer
45	690977	1	Valve Tappet
192	807623	1	Rocker Arm Adjuster
276A	807085	1	Sealing Washer
337	496018	1	Sparkplug
383	19374	1	Sparkplug Wrench

Ref. No.	Part No.	Qty.	Description
613	691902	1	Screw (Exhaust Manifold)
635	692076	1	Sparkplug Boot
830	809157	1	Stud (Rocker Arm)
868	691963	1	Valve Seal
871	692057	1	Bushing Guide
883	691613	1	Exhaust Gasket
Δ★1022	806039	1	Rocker Cover Gasket
1026	691836	1	Push Rod (Steel–Intake)
	691758	1	Push Rod (Aluminum–Exhaust)
1029	691543	1	Rocker Arm
1100	690973	1	Rocker Arm Pivot
1254	807084	1	Screw (Rocker Arm Stud)

Δ Included in Valve Overhaul Gasket Set–Ref. 1095.
★ Included in Engine Gasket Set–Ref. 358.

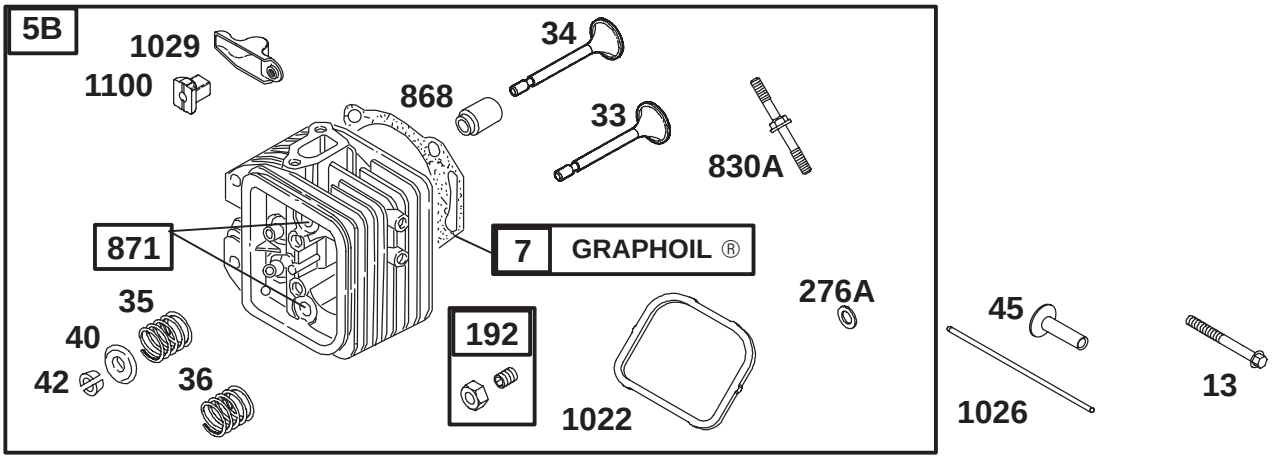

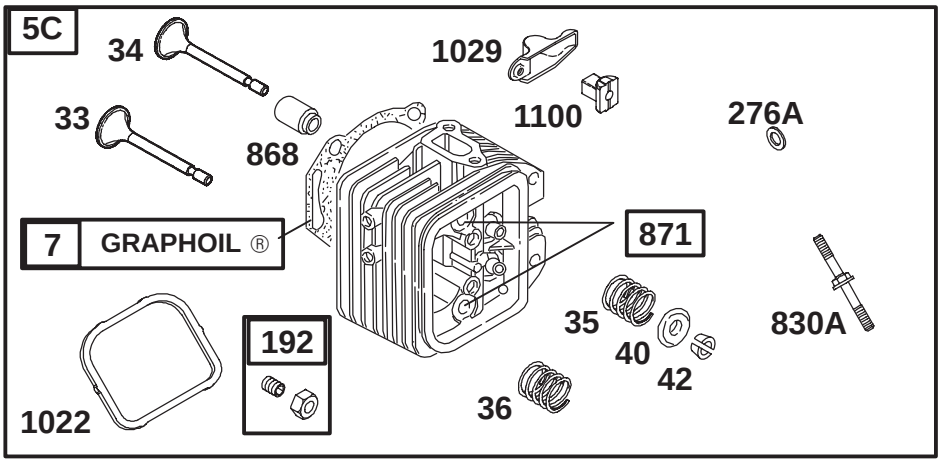

Assemblies include all parts shown in frames.

Cylinder Head Assembly
Briggs and Stratton Model 350447–1331–E1

Ref. No.	Part No.	Qty.	Description
5B	808383	1	Cylinder Head (No. 1) (Used Before Date Code 01120300)
5C	808384	1	Cylinder Head (No. 2) (Used Before Date Code 01120300)
Δ★7	690888	1	Cylinder Head Gasket
13	692059	1	Screw (Cylinder Head)
33	807681	1	Exhaust Valve
34	807680	1	Intake Valve
35	692084	1	Valve Spring (Intake)
36	692084	1	Valve Spring (Exhaust)
40	692058	1	Valve Retainer
42	807683	1	Valve Retainer
45	690977	1	Valve Tappet
192	807623	1	Rocker Arm Adjuster
276A	691766	1	Sealing Washer (Used Before Date Code 01120300)

Ref. No.	Part No.	Qty.	Description
830A	691544	1	Stud (Rocker Arm) (Used Before Date Code 01120300)
868	691963	1	Valve Seal
871	692057	1	Bushing Guide
Δ★1022	806039	1	Rocker Cover Gasket
1026	691836	1	Push Rod (Steel–Intake)
	691758	1	Push Rod (Aluminum–Exhaust)
1029	691543	1	Rocker Arm
1100	690973	1	Rocker Arm Pivot

Δ Included in Valve Overhaul Gasket Set–Ref. 1095.
★ Included in Engine Gasket Set–Ref. 358.

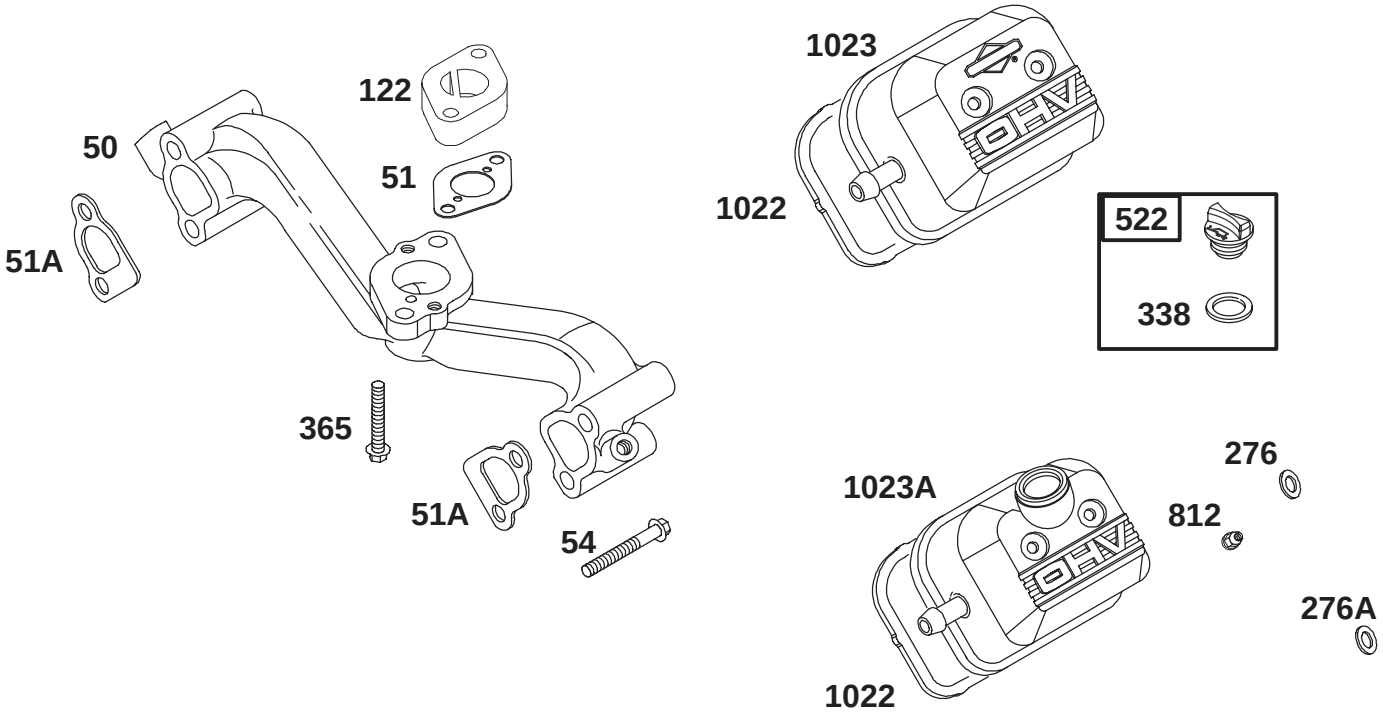

Assemblies include all parts shown in frames.

Intake Manifold and Rocker Cover Assembly Briggs and Stratton Model 350447–1331–E1

Ref. No.	Part No.	Qty.	Description
50	690754	1	Intake Manifold
★51	691694	1	Intake Gasket
Δ★51A	692035	1	Intake Gasket
54	690676	1	Screw (Intake Manifold)
122	690691	1	Carburetor Spacer
276	807085	1	Sealing Washer (Used After Date Code 01120200)
276A	691766	1	Sealing Washer (Used Before Code Date 01120300)
338	691312	1	Dipstick Gasket
365	690711	1	Screw (Carburetor)
522	491832	1	Dipstick/Fill Plug
812	692055	1	Nut (Rocker Arm Cover) (Used Before Code Date 01120300)
Δ★1022	806039	1	Rocker Cover Gasket
1023	691494	1	Rocker Cover
1023A	690910	1	Rocker Cover

Ref. No.	Part No.	Qty.	Description

Δ Included in Valve Overhaul Gasket Set–Ref. 1095.
★ Included in Engine Gasket Set–Ref. 358.

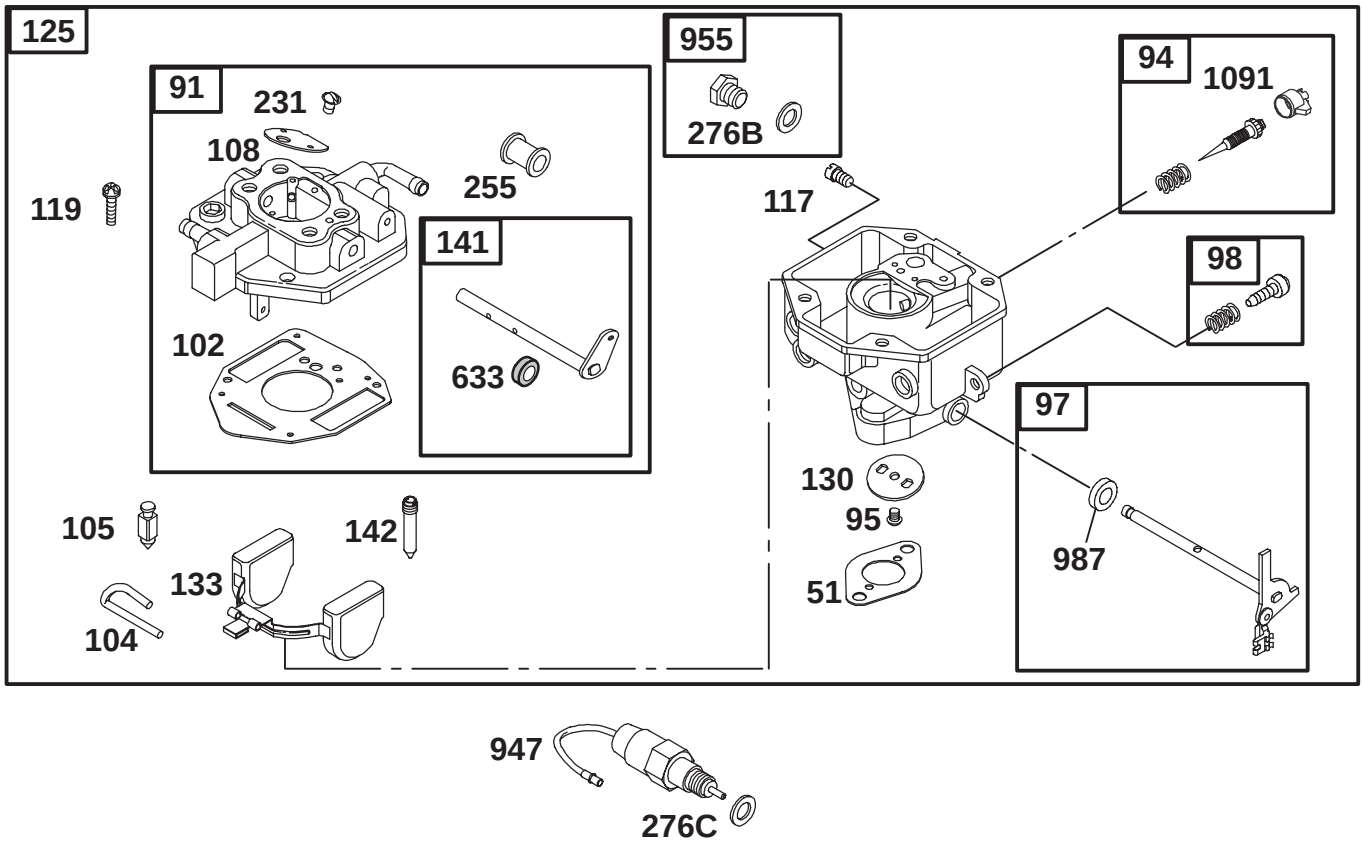

Assemblies include all parts shown in frames.

Carburetor Assembly
Briggs and Stratton Model 350447–1331–E1

Ref. No.	Part No.	Qty.	Description
★51	691694	1	Intake Gasket
91	809208	1	Upper Carburetor Body
●94	808257	1	Idle Mixture Kit
●95	690718	1	Screw (Throttle Valve)
97	808973	1	Throttle Shaft Kit
98	808981	1	Idle Speed Kit
●102	692077	1	Carburetor Body Gasket
●104	690723	1	Float Hinge Pin
●105	692078	1	Float Needle Valve
108	690719	1	Choke Valve
109	809096	1	Choke Shaft
● 117	808406	1	Main Jet (Standard)
119	690720	1	Screw (Upper to Lower Carburetor Body)
125	809209	1	Carburetor
130	690726	1	Throttle Valve
133	806961	1	Carburetor Float
●142	690725	1	Carburetor Nozzle
●231	690718	1	Screw (Choke Valve)
●255	690721	1	Choke Shaft Bushing
●276B	690724	1	Sealing Washer
276C	806137	1	Sealing Washer
●633	690722	1	Choke/Throttle Shaft Seal
947	692094	1	Fuel Solenoid
955	807723	1	Carburetor Plug
●987	806131	1	Throttle Shaft Seal
●1091	691516	1	Limiter Cap

● Included in Carburetor Overhaul Kit–Ref. 121.
★ Included in Engine Gasket Set–Ref. 358.

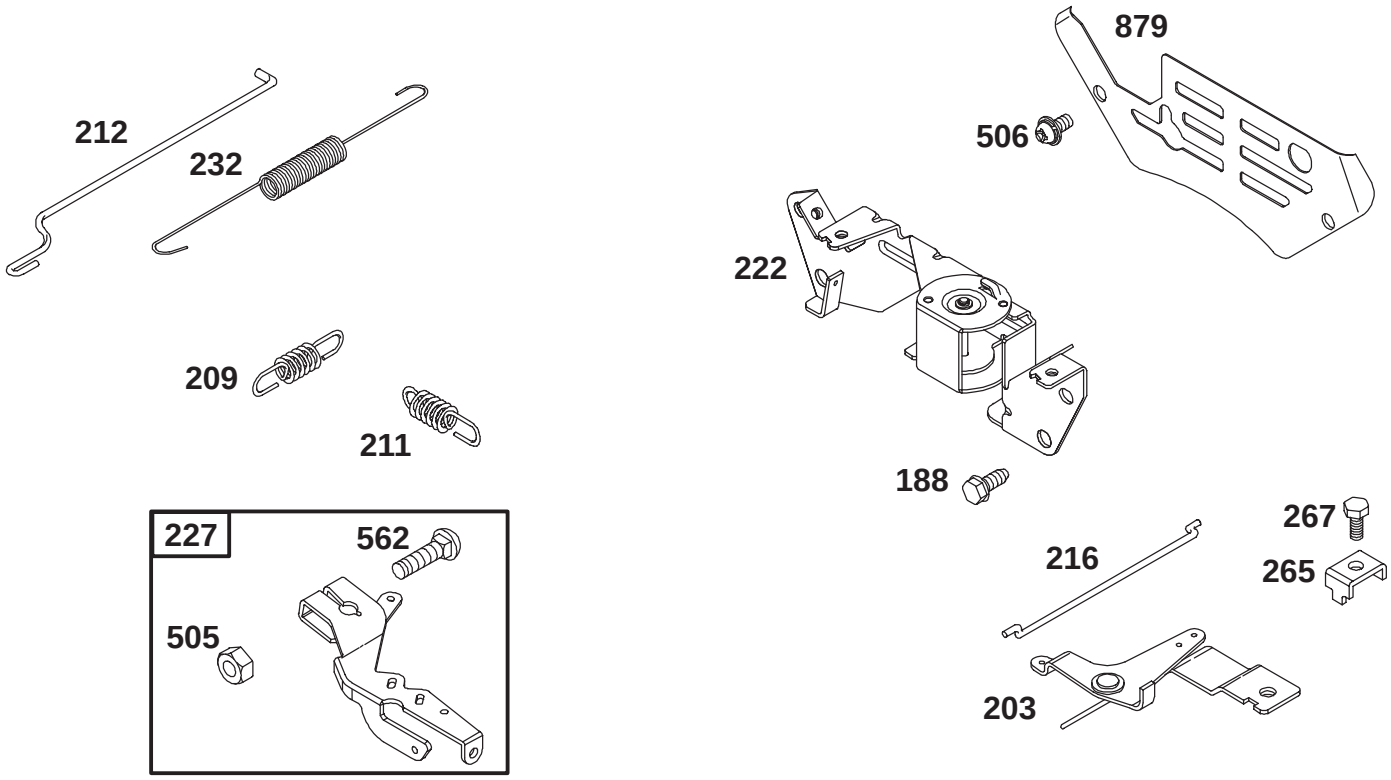

Assemblies include all parts shown in frames.

Governor Assembly
Briggs and Stratton Model 350447–1331–E1

Ref. No.	Part No.	Qty.	Description
188	692056	1	Screw (Control Bracket)
203	690923	1	Bell Crank
209	806872	1	Governor Spring
211	806868	1	Governed Idle Spring
	692068	1	Governed Idle Spring (Secondary)
212	690712	1	Throttle Link
216	690705	1	Choke Link
222	808454	1	Control Bracket
227	690236	1	Governor Control Lever
232	692073	1	Governor Link Spring
265	691024	1	Casing Clamp
267	692083	1	Screw (Casing Clamp)
505	690238	1	Nut (Governor Control (Lever)
506	690677	1	Screw (Carburetor Cover)
562	690239	1	Bolt (Governor Control Lever)
879	690757	1	Carburetor Cover

Ref. No.	Part No.	Qty.	Description

★ Included in Engine Gasket Set–Ref. 358.

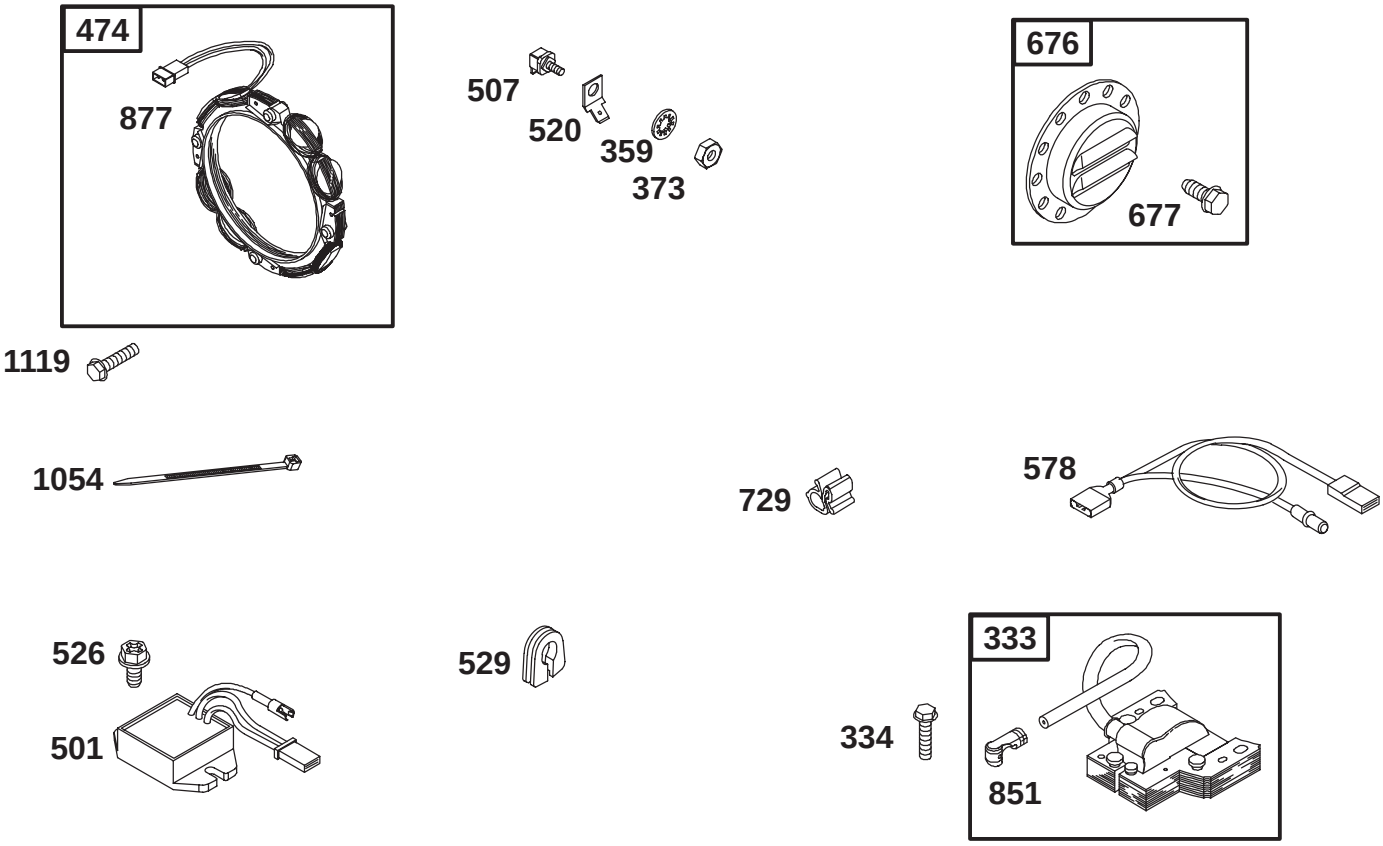

Assemblies include all parts shown in frames.

Alternator Assembly
Briggs and Stratton Model 350447–1331–E1

Ref. No.	Part No.	Qty.	Description
333	492341	1	Magneto Armature
334	692066	1	Screw (Magneto Armature)
359	691077	1	Washer (Ground Terminal)
373	691612	1	Nut (Ground Terminal)
474	696458	1	Alternator
501	691185	1	Regulator
507	691972	1	Insulator
520	691084	1	Ground Terminal
526	692067	1	Screw (Regulator)
529	690744	1	Grommet
578	692319	1	Wire Assembly
676	397630	1	Muffler Deflector
677	690661	1	Screw (Muffler Deflector)
729	690586	1	Wire Clip
851	493880	1	Sparkplug Terminal
877	399916	1	Alternator Harness
1054	280275	1	Cable Tie
1119	691552	1	Screw (Alternator)

Ref. No.	Part No.	Qty.	Description

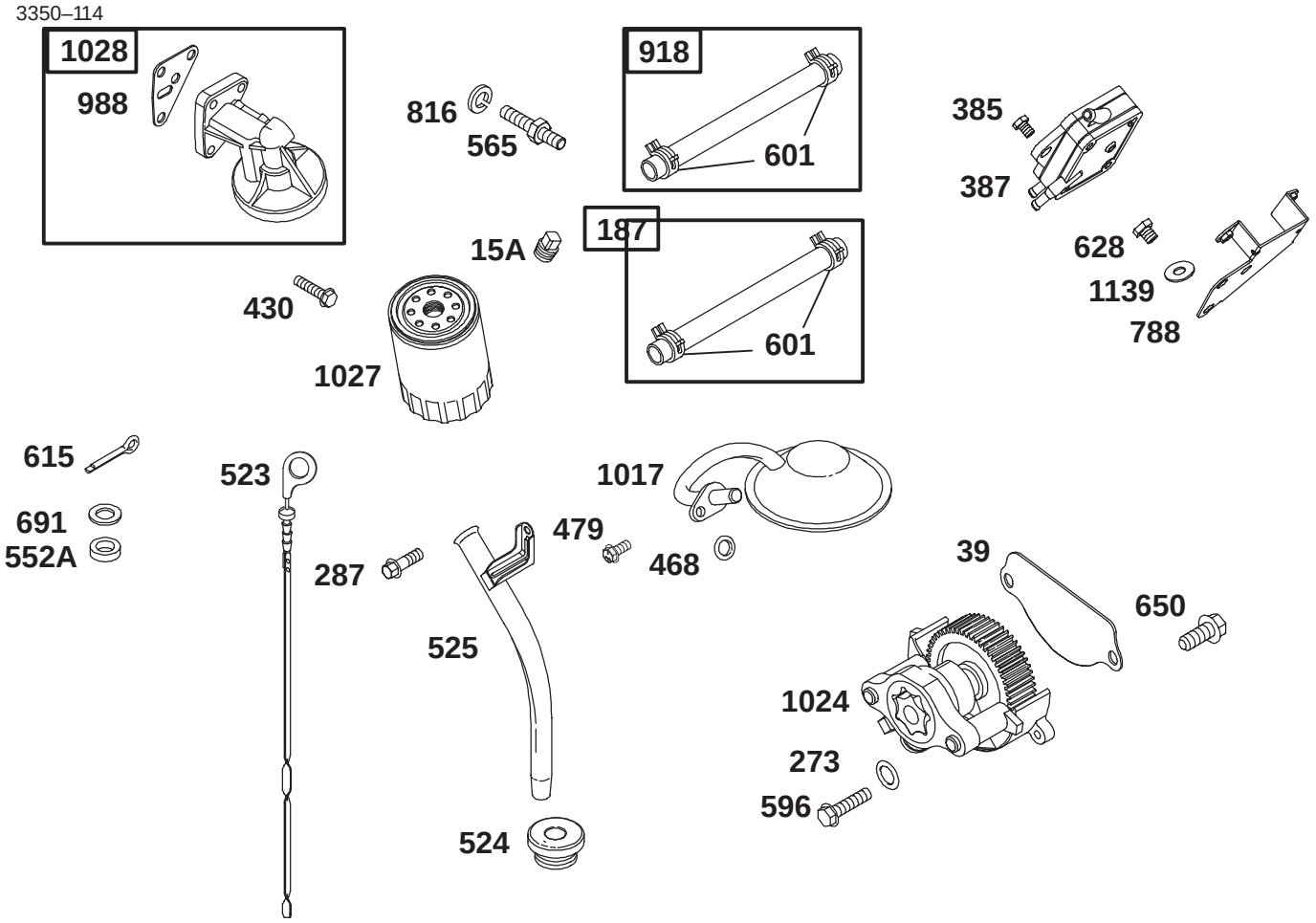

Assemblies include all parts shown in frames.

Fuel Pump, Oil Pump and Dipstick Assembly Briggs and Stratton Model 350447–1331–E1

Ref. No.	Part No.	Qty.	Description
15A	690283	1	Oil Drain Plug
39	690745	1	Oil Deflector
187	691050	1	Fuel Line (Cut to Required Length)
★273	690681	1	O–Ring Seal (Oil Pump)
287	692062	1	Screw (Dipstick Tube)
385	693169	1	Screw (Fuel Pump)
387	808969	1	Fuel Pump
430	690679	1	Bolt (Oil Pump)
★468	690690	1	O–Ring Seal (OIl Pump Screen)
479	807084	1	Screw (Oil Pump Screen)
523	693175	1	Dipstick
524	693172	1	Dipstick Tube Seal
525	693174	1	Dipstick Tube
552A	690701	1	Governor Crank Bushing
565	690682	1	Stud (Oil Filter)
596	691492	1	Screw (Oil Pump)
601	691038	1	Hose Clamp
615	691550	1	Governor Shaft Retainer
628	692062	1	Screw (Pump Bracket)
650	692539	1	Screw (Oil Deflector)
691	690680	1	Governor Shaft Seal
788	691559	1	Pump Bracket
816	690706	1	Washer (Oil Filter)
918	393815	1	Vacuum Hose
★988	692063	1	Oil Adapter Gasket
1017	690900	1	Oil Pump Screen
1024	693185	1	Oil Pump
1027	492932	1	Oil Filter
1028	808235	1	Oil Filter Adapter
1139	806497	1	Washer (Fuel Pump Bracket)

★ Included in Engine Gasket Set–Ref. 358.

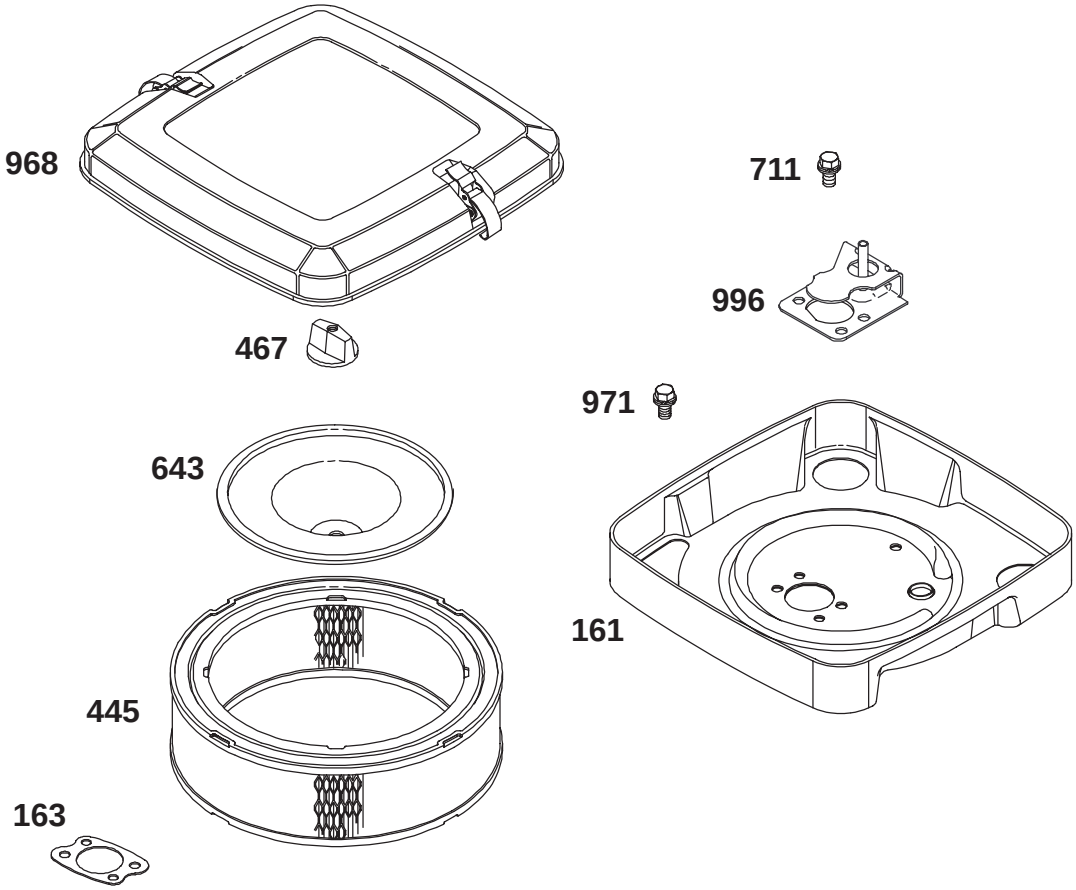

Assemblies include all parts shown in frames.

Air Cleaner Assembly
Briggs and Stratton Model 350447–1331–E1

Ref. No.	Part No.	Qty.	Description
161	691561	1	Air Cleaner Base
163	692081	1	Air Cleaner Gasket
445	394018	1	Air Cleaner Cartridge Filter
467	691985	1	Air Cleaner Knob
643	692079	1	Air Filter Retainer
711	692539	1	Screw (Carburetor Shield)
968	692097	1	Air Cleaner Cover
971	692537	1	Screw (Air Cleaner Base)
996	691577	1	Carburetor Shield

Ref. No.	Part No.	Qty.	Description

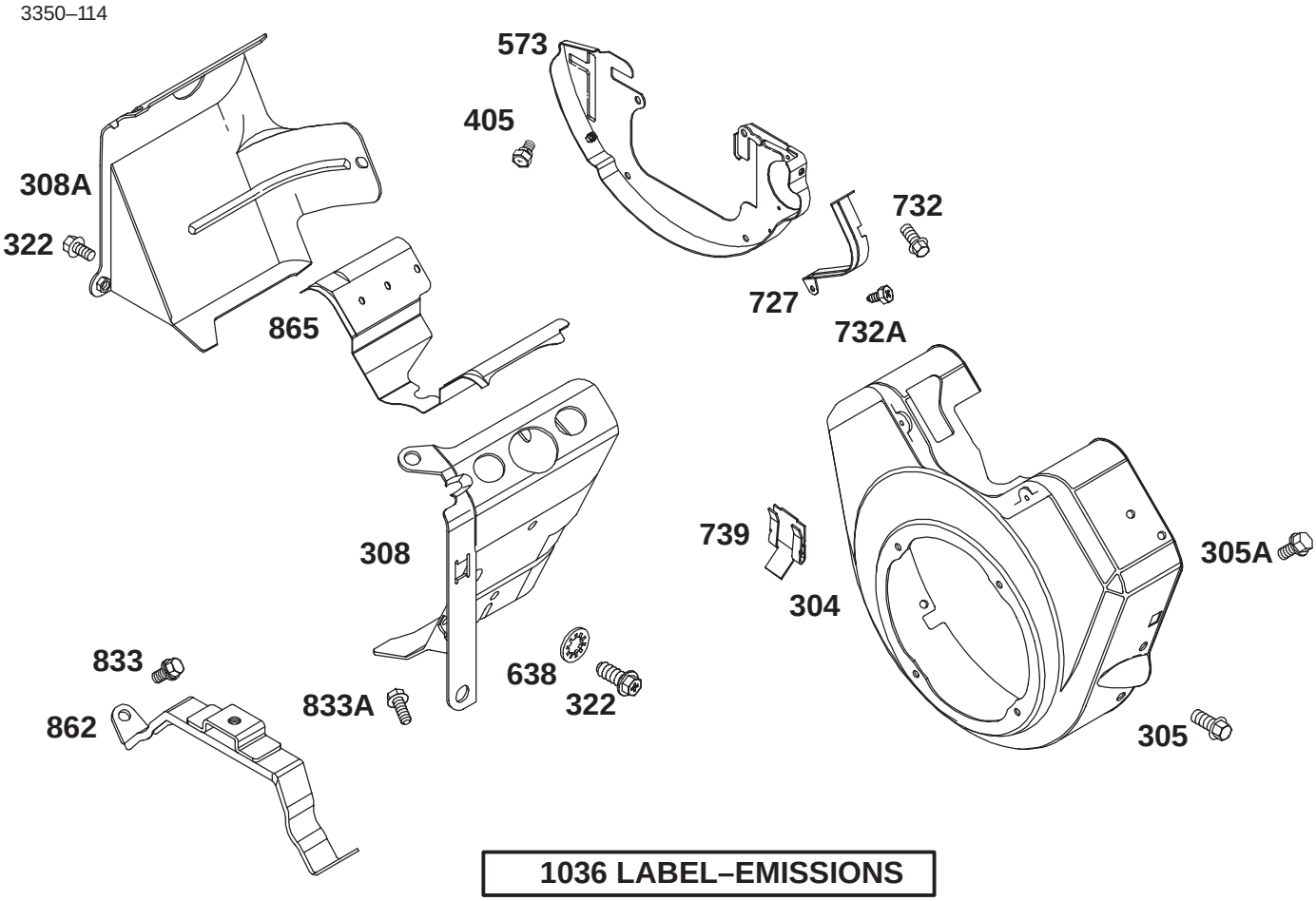

Assemblies include all parts shown in frames.

Blower Housing Assembly
Briggs and Stratton Model 350447–1331–E1

Ref. No.	Part No.	Qty.	Description
304	690929	1	Blower Housing
305	692539	1	Screw (Blower Housing)
305A	692056	1	Screw (Blower Housing)
308	806547	1	Cylinder Head Cover (Cylinder #1)
308A	806546	1	Cylinder Head Cover (Cylinder #2)
322	692539	1	Screw (Cylinder Head Cover)
405	807163	1	Screw (Back Plate)
573	690902	1	Back Plate
638	691551	1	Washer (Cylinder Head Cover)
727	690714	1	Starter Drive Cover
732	692539	1	Screw (Starter Drive Cover)
732A	690688	1	Screw (Starter Drive Cover)
739	690451	1	Debris Clip
833	692539	1	Screw (Cleaner Mounting Strap)
833A	690872	1	Screw (Cleaner Mounting Strap)
862	692153	1	Cleaner Mounting Strap
865	690750	1	Air Guide Cover
1036	806885	1	Emissions Label

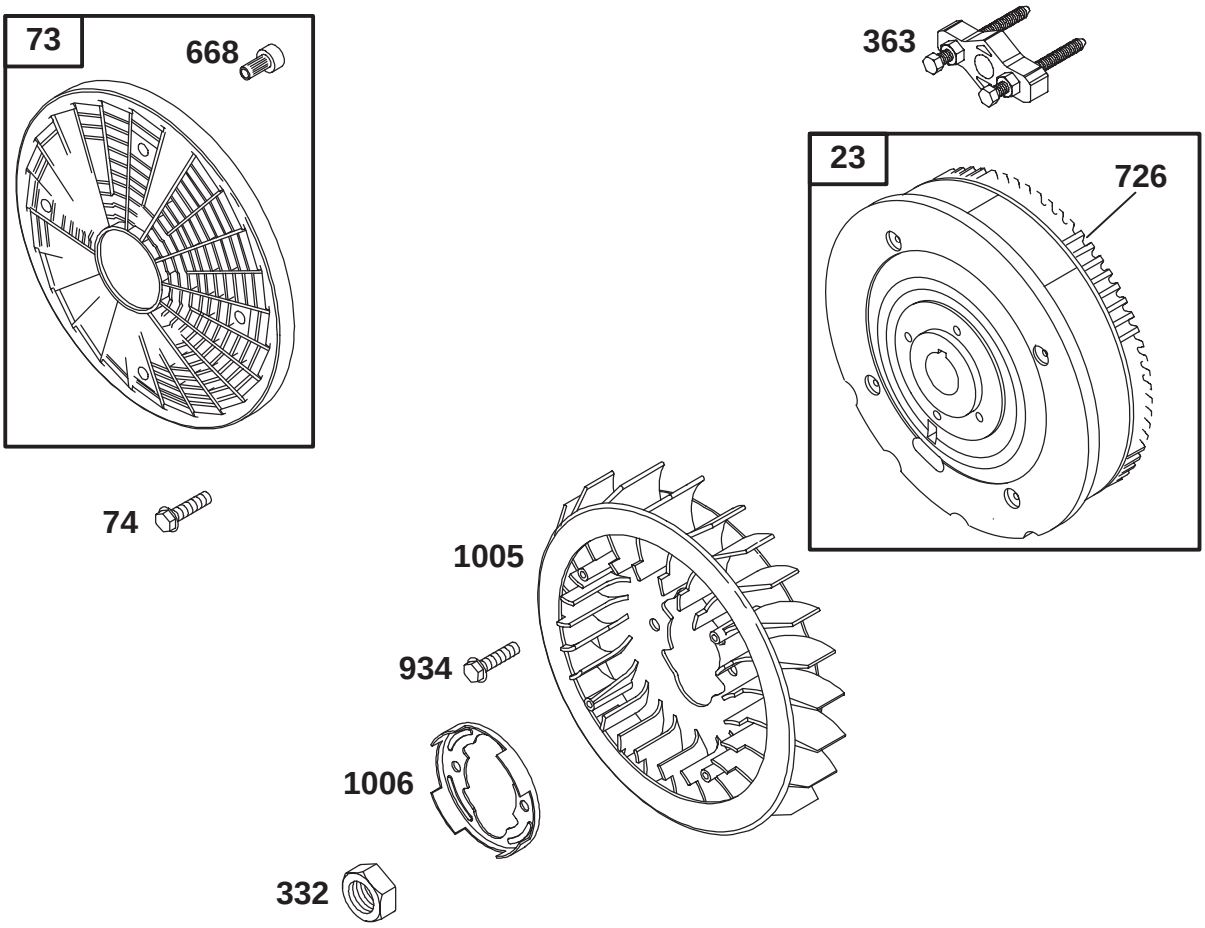

Assemblies include all parts shown in frames.

Flywheel Assembly
Briggs and Stratton Model 350447–1331–E1

Ref. No.	Part No.	Qty.	Description
23	808768	1	Flywheel
73	494439	1	Rotating Screen
74	691647	1	Screw (Rotating Screen)
332	690887	1	Nut (Flywheel)
363	19203	1	Flywheel Puller
668	691500	1	Spacer
726		1	Ring Gear (Sold in Flywheel Kit Only, See Ref. 23)
934	691058	1	Screw (Fan Retainer)
1005	690911	1	Flywheel Fan
1006	690452	1	Fan Retainer

Ref. No.	Part No.	Qty.	Description

3350–114

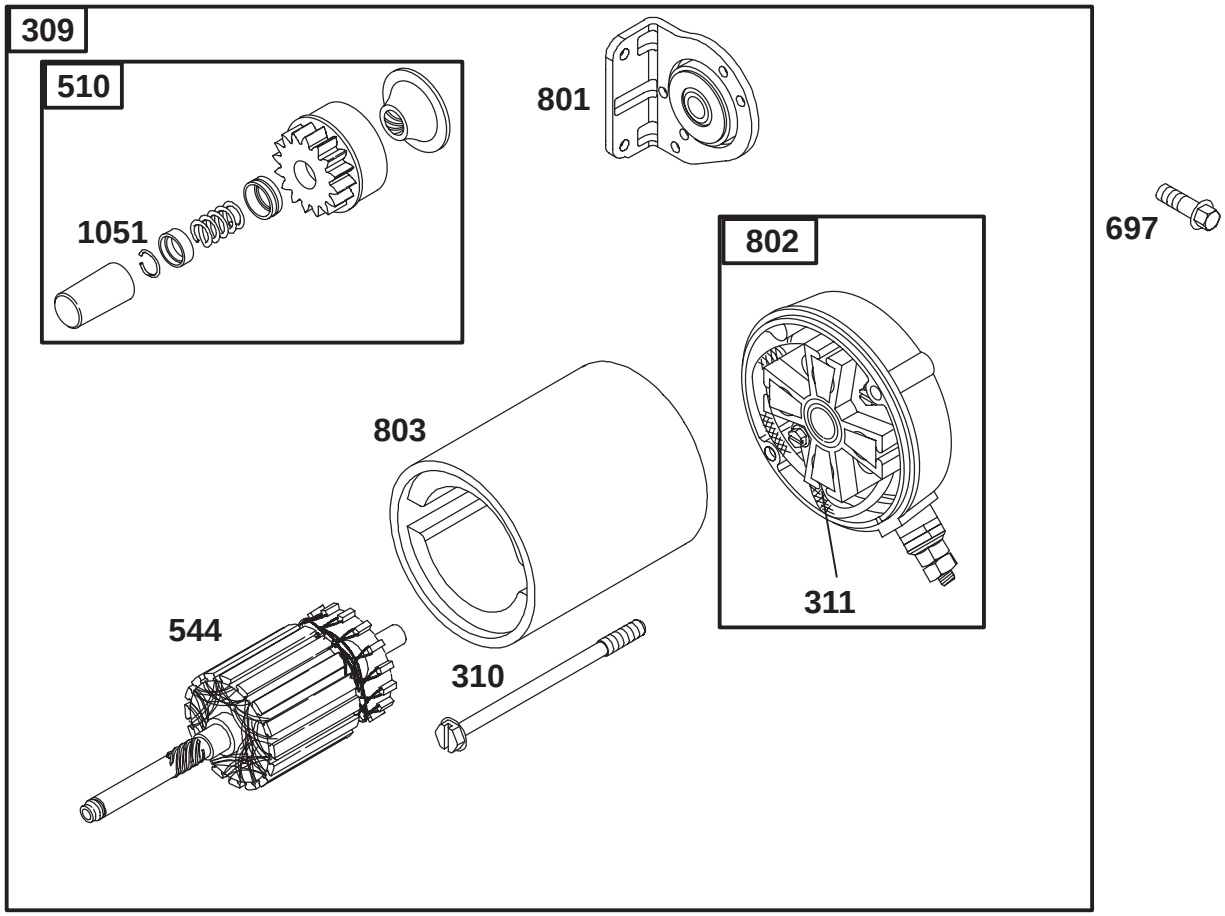

Assemblies include all parts shown in frames.

Starter Assembly
Briggs and Stratton Model 350447–1331–E1

Ref. No.	Part No.	Qty.	Description
309	691564		Starter Motor
310	496880	1	Screw (Starter Housing)
311	496887	1	Brush Set
510	496881	1	Starter Drive
544	690855	1	Starter Armature
697	692062	1	Screw (Drive Cap)
801	808778	1	Drive Cap
802	496813	1	End Cap
803	690854	1	Starter Housing
1051	691124	1	Ring–Retaining

Ref. No.	Part No.	Qty.	Description

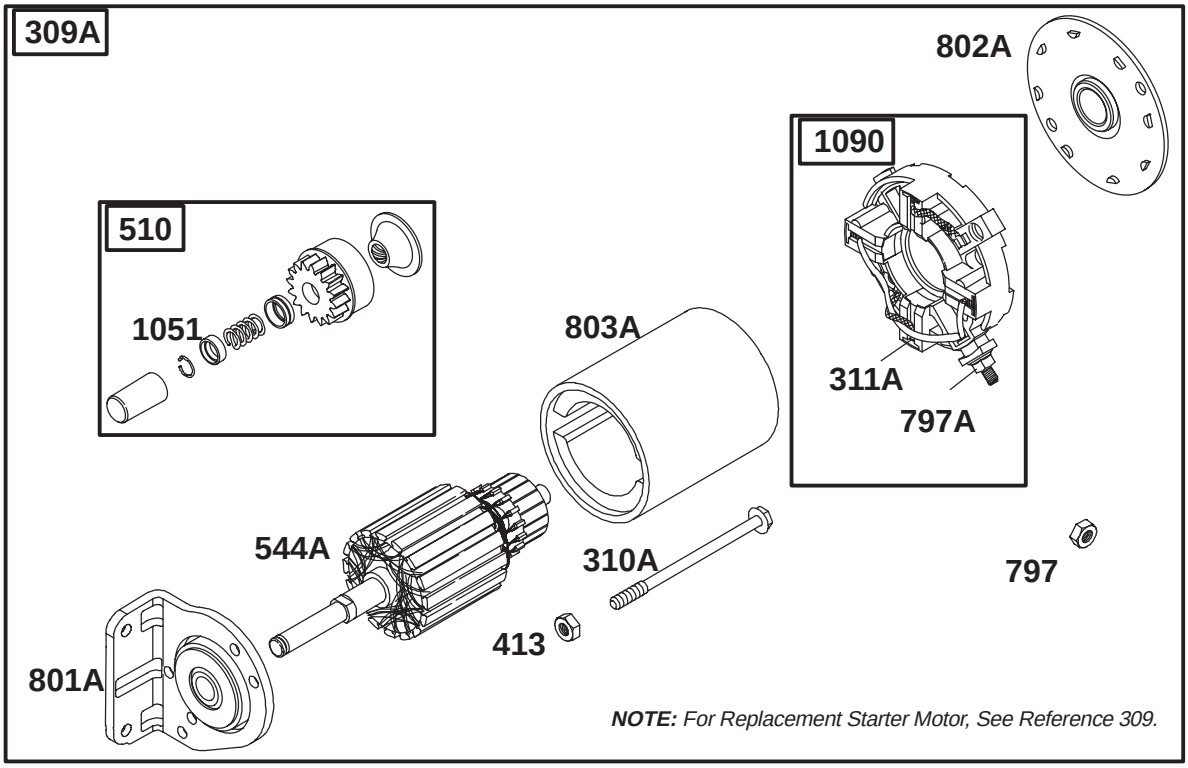

Assemblies include all parts shown in frames.

Starter Assembly
Briggs and Stratton Model 350447–1331–E1

Ref. No.	Part No.	Qty.	Description
309A			Starter Motor (For Replacement Starter Motor, See Ref. 309)
310A	690323	1	Screw (Starter Motor)
311A	497608	1	Brush Set
413	693587	1	Nut (Starter Motor)
510	496881	1	Starter Drive
544A	693548	1	Starter Armature
797	691029	1	Nut (Starter Cable)
797A	693167	1	Nut (Starter Cable)
801A	808777	1	Drive Cap
802A	691286	1	End Cap
803A	693547	1	Starter Housing
1051	691124	1	Ring–Retaining
1090	691293	1	Brush Retainer

Ref. No.	Part No.	Qty.	Description

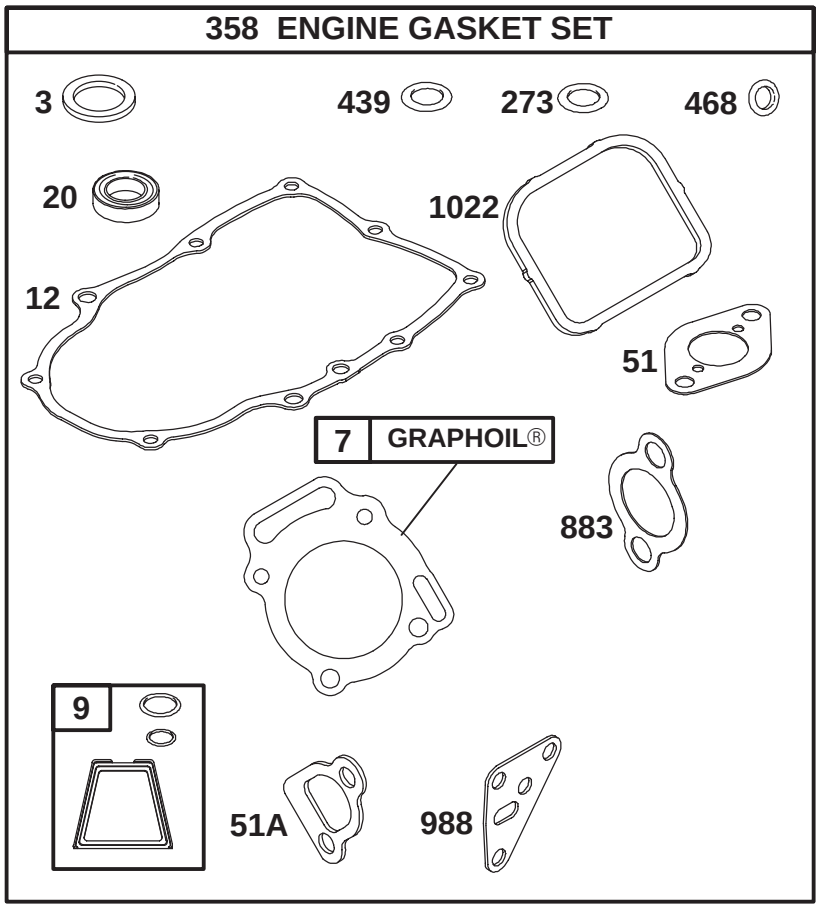

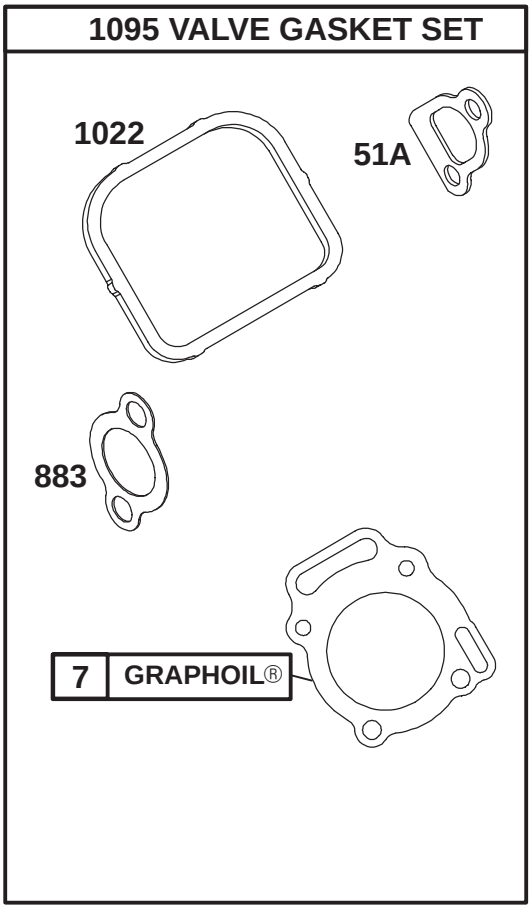

Assemblies include all parts shown in frames.

Gasket Assembly
Briggs and Stratton Model 350447–1331–E1

Ref. No.	Part No.	Qty.	Description
★3	805101	1	Oil Seal
Δ★7	690888	1	Cylinder Head Gasket
★9	807688	1	Breather Gasket
★12	691684	1	Crankcase Gasket
★20	805049	1	Oil Seal
★51	691694	1	Intake Gasket
★51A	692035	1	Intake Gasket
★273	690681	1	O Ring Seal (Oil Pump)
Δ★276A	691766	1	Sealing Washer
358	808389	1	Engine Gasket Set
★439	692154	1	O–Ring Seal (Crankcase Cover)
★468	690960	1	O Ring Seal (Oil Pump Screen)
Δ★883	691613	1	Exhaust Gasket
★988	692063	1	Oil Adapter Gasket
Δ★1022	806039	1	Rocker Cover Gasket
1095	808391	1	Valve Gasket Set

Ref. No.	Part No.	Qty.	Description

Δ Included in Valve Gasket Set–Ref. 1095.
★ Included in Engine Gasket Set–Ref. 358.

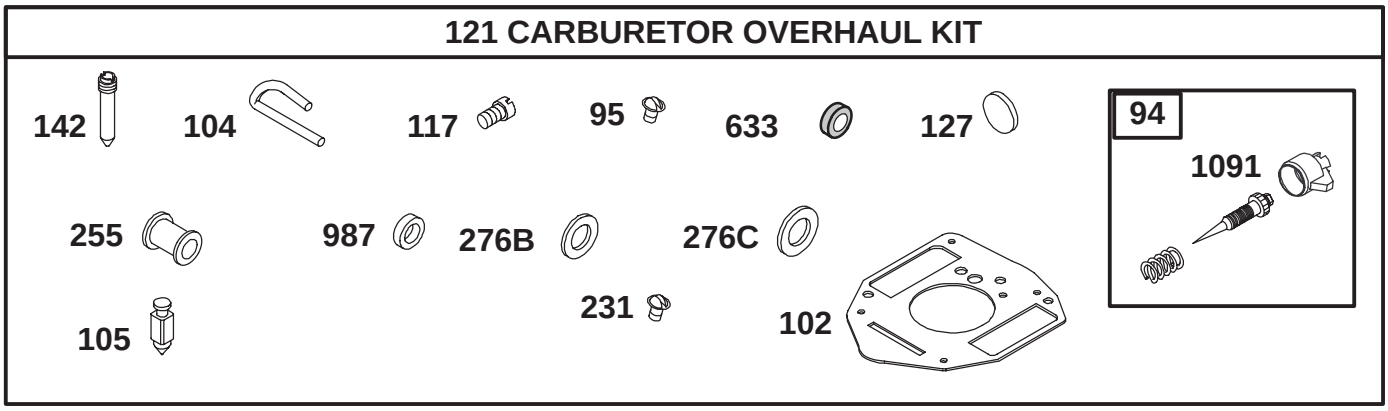

Assemblies include all parts shown in frames.

Carburetor Overhaul Kit Assembly
Briggs and Stratton Model 350447–1331–E1

Ref. No.	Part No.	Qty.	Description
●94	808257	1	Idle Mixture Kit
●95	690718	1	Screw (Throttle Valve)
●102	692077	1	Carburetor Body Gasket
●104	690723	1	Float Hinge Pin
●105	692078	1	Float Needle Valve
●117	806126	1	Main Jet
121	808395	1	Carburetor Overhaul Kit
●127	690727	1	Welch Plug
●142	806128	1	Carburetor Nozzle
●231	690718	1	Screw (Choke Valve)
●255	690721	1	Choke Shaft Bushing
●276B	690724	1	Sealing Washer
●276C	806137	1	Sealing Washer
●633	690722	1	Choke/Throttle Shaft Seal
●987	806131	1	Throttle Shaft Seal
●1091	691516	1	Limiter Cap

Ref. No.	Part No.	Qty.	Description

● Included in Carburetor Overhaul Kit–Ref. 121.

TORO®