Form No. 3350–156

TORO®

Reelmaster 6500-D

2 and 4 Wheel Drive Traction Unit

Model No. 03806—230000301 and Up

Model No. 03807—230000301 and Up

Operator’s Manual

CE

English (EN, GB)

Warning

CALIFORNIA

Proposition 65 Warning

Diesel engine exhaust and some of its constituents are known to the State of California to cause cancer, birth defects, and other reproductive harm.

Important The engine in this product is not equipped with a spark arrester muffler. It is a violation of California Public Resource Code Section 4442 to use or operate this engine on any forest-covered, brush-covered, or grass-covered land as defined in CPRC 4126. Other states or federal areas may have similar laws.

Contents

	Page
Introduction	3
Safety	3
Safe Operating Practices	3
Toro Riding Mower Safety	5
Sound Pressure Level	6
Vibration Level	6
Safety and Instruction Decals	7
Specifications	12
General Specifications	12
Measurements	13
Optional Equipment	13
Setup	14
Installing the Cutting Units	14
Alternate Adjustments	16
Before Operating	19
Checking the Engine Oil	19
Checking the Cooling System	19
Filling the Fuel Tank	20
Checking the Hydraulic Fluid	20
Checking the Planetary Gear Drive Oil	21
Checking the Rear Axle Lubricant (Model No. 03807 Only)	22
Checking the Tire Pressure	22
Checking the Reel to Bedknife Contact	22
Checking the Torque of the Wheel Nuts or Bolts	22
Operation	23
Controls	23
Starting and Stopping	25
Bleeding the Fuel System	25
Red Diagnostic Light	26
Pushing or Towing the Machine	26
Green Diagnostic Light	27
Diagnostic ACE Display (Optional)	27
Checking the Interlock Switches	27
Fault Memory and Retrieval	29
Hydraulic Solenoid Valve Functions	29
Operating Characteristics	29
Maintenance	31
Recommended Maintenance Schedule	31
Daily Maintenance Checklist	32
Lubrication	33
Service Interval Chart	35
Servicing the Air Cleaner	36
Servicing the Engine Oil and Filter	37
Fuel System	37
Engine Cooling System	39
Check Engine Belt	39
Adjusting Throttle	40
Changing the Hydraulic Fluid	40
Replacing the Hydraulic Filter	40
Checking the Hydraulic Lines and Hoses	41
Hydraulic System Test Ports	41
Adjusting the Traction Drive for Neutral	42
Hydraulic Schematic—2 Wheel Drive	43
Hydraulic Schematic—4 Wheel Drive	44
Adjusting the Service Brakes	45
Changing the Planetary Gear Drive Oil	45
Changing the Rear Axle Lubricant	46
Rear Wheel Toe-In	46
Battery Care	46
Fuses	47
Optional Lighting	47
Electrical Schematic	48
Backlapping	49
Storage	51
Traction Unit	51
Engine	51
The Toro General Commercial Products Warranty	52

© 2003 by The Toro Company
8111 Lyndale Avenue South
Bloomington, MN 55420-1196

All Rights Reserved
Printed in the USA

Introduction

Read this manual carefully to learn how to operate and maintain your product properly. The information in this manual can help you and others avoid injury and product damage. Although Toro designs and produces safe products, you are responsible for operating the product properly and safely.

Whenever you need service, genuine Toro parts, or additional information, contact an Authorized Service Dealer or Toro Customer Service and have the model and serial numbers of your product ready. Figure 1 illustrates the location of the model and serial numbers on the product.

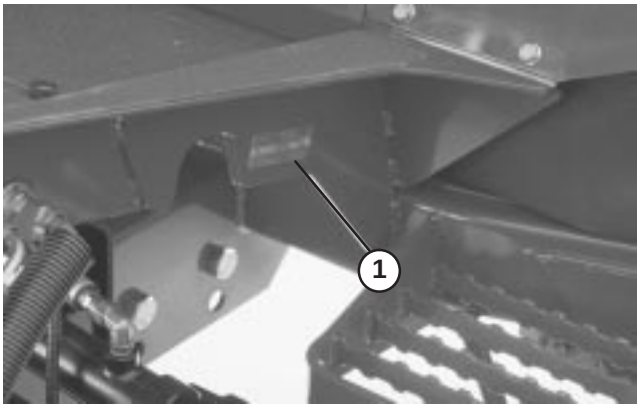

Figure 1

1. Location of the model and serial numbers

Write the product model and serial numbers in the space below:

Model No. _____

Serial No. _____

This manual identifies potential hazards and has special safety messages that help you and others avoid personal injury and even death. ***Danger***, ***Warning***, and ***Caution*** are signal words used to identify the level of hazard. However, regardless of the hazard, be extremely careful.

Danger signals an extreme hazard that *will* cause serious injury or death if you do not follow the recommended precautions.

Warning signals a hazard that *may* cause serious injury or death if you do not follow the recommended precautions.

Caution signals a hazard that may cause minor or moderate injury if you do not follow the recommended precautions.

This manual uses two other words to highlight information. **Important** calls attention to special mechanical information and **Note:** emphasizes general information worthy of special attention.

Safety

This machine meets or exceeds CEN standard EN 836:1997, ISO standard 5395:1990, and ANSI B71.4-1999 specifications in effect at the time of production when 40 lb. of ballast is added to the rear wheel.

Improper use or maintenance by the operator or owner can result in injury. To reduce the potential for injury, comply with these safety instructions and always pay attention to the safety alert ⚠ symbol, which means CAUTION, WARNING, or DANGER—"personal safety instruction." Failure to comply with the instruction may result in personal injury or death.

Safe Operating Practices

The following instructions are from the CEN standard EN 836:1997, ISO standard 5395:1990, and ANSI B71.4-1999.

Training

- Read the operator's manual and other training material carefully. Be familiar with the controls, safety signs, and the proper use of the equipment.
- Never allow children or people unfamiliar with these instructions to use or service the mower. Local regulations may restrict the age of the operator.
- Never mow while people, especially children, or pets are nearby.
- Keep in mind that the operator or user is responsible for accidents or hazards occurring to other people or their property.
- Do not carry passengers.
- All drivers and mechanics should seek and obtain professional and practical instruction. The owner is responsible for training the users. Such instruction should emphasize:
  - the need for care and concentration when working with ride-on machines;
  - control of a ride-on machine sliding on a slope will not be regained by the application of the brake. The main reasons for loss of control are:
    - insufficient wheel grip;
    - being driven too fast;
    - inadequate braking;

- the type of machine is unsuitable for its task;
- lack of awareness of the effect of ground conditions, especially slopes;
- incorrect hitching and load distribution.

- The owner/user can prevent and is responsible for accidents or injuries occurring to himself or herself, other people, or property.

Preparation

- While mowing, always wear substantial footwear, long trousers, hard hat, safety glasses, and ear protection. Long hair, loose clothing, or jewelry may get tangled in moving parts. Do not operate the equipment when barefoot or wearing open sandals.
- Thoroughly inspect the area where the equipment is to be used and remove all objects which may be thrown by the machine.
- **Warning**—Fuel is highly flammable. Take the following precautions:
  - Store fuel in containers specifically designed for this purpose.
  - Refuel outdoors only and do not smoke while refuelling.
  - Add fuel before starting the engine. Never remove the cap of the fuel tank or add fuel while the engine is running or when the engine is hot.
  - If fuel is spilled, do not attempt to start the engine but move the machine away from the area of spillage and avoid creating any source of ignition until fuel vapors have dissipated.
  - Replace all fuel tanks and container caps securely.
- Replace faulty silencers/mufflers.
- Evaluate the terrain to determine what accessories and attachments are needed to properly and safely perform the job. Only use accessories and attachments approved by the manufacturer.
- Check that operator's presence controls, safety switches and shields are attached and functioning properly. Do not operate unless they are functioning properly.

Operation

- Do not operate the engine in a confined space where dangerous carbon monoxide fumes can collect.
- Mow only in daylight or in good artificial light.
- Before attempting to start the engine, disengage all blade attachment clutches, shift into neutral, and engage the parking brake.
- Do not use on slopes of more than
  - 5° when mowing on side hills;
  - 10° when mowing uphill;
  - 15° when mowing downhill.
- Remember there is no such thing as a safe slope. Travel on grass slopes requires particular care. To guard against overturning:
  - do not stop or start suddenly when going up or downhill;
  - engage clutch slowly, always keep machine in gear, especially when travelling downhill;
  - machine speeds should be kept low on slopes and during tight turns;
  - stay alert for humps and hollows and other hidden hazards;
  - never mow across the face of the slope, unless the mower is designed for this purpose.
- Stay alert for holes in the terrain and other hidden hazards.
- Use care when pulling loads or using heavy equipment.
  - Use only approved drawbar hitch points.
  - Limit loads to those you can safely control.
  - Do not turn sharply. Use care when reversing.
  - Use counterweight(s) or wheel weights when suggested in the operator's manual.
- Watch out for traffic when crossing or near roadways.
- Stop the blades rotating before crossing surfaces other than grass.
- When using any attachments, never direct discharge of material toward bystanders nor allow anyone near the machine while in operation.
- Never operate the machine with damaged guards, shields, or without safety protective devices in place. Be sure all interlocks are attached, adjusted properly, and functioning properly.
- Do not change the engine governor settings or overspeed the engine. Operating the engine at excessive speed may increase the hazard of personal injury.
- Before leaving the operator's position:
  - stop on level ground;
  - disengage the power take-off and lower the attachments;
  - change into neutral and set the parking brake;
  - stop the engine and remove the key.

- Disengage drive to attachments when transporting or not in use.
- Stop the engine and disengage drive to attachment
  - before refuelling;
  - before removing the grass catcher/catchers;
  - before making height adjustment unless adjustment can be made from the operator's position.
  - before clearing blockages;
  - before checking, cleaning or working on the mower;
  - after striking a foreign object or if an abnormal vibration occurs. Inspect the mower for damage and make repairs before restarting and operating the equipment.
- Reduce the throttle setting during engine run-out and, if the engine is provided with a shut-off valve, turn the fuel off at the conclusion of mowing.
- Keep hands and feet away from the cutting units.
- Look behind and down before backing up to be sure of a clear path.
- Slow down and use caution when making turns and crossing roads and sidewalks. Stop cylinders/reels if not mowing.
- Do not operate the mower under the influence of alcohol or drugs
- Use care when loading or unloading the machine into a trailer or truck
- Use care when approaching blind corners, shrubs, trees, or other objects that may obscure vision.

Maintenance and Storage

- Keep all nuts, bolts and screws tight to be sure the equipment is in safe working condition.
- Never store the equipment with fuel in the tank inside a building where fumes may reach an open flame or spark.
- Allow the engine to cool before storing in any enclosure.
- To reduce the fire hazard, keep the engine, silencer/muffler, battery compartment and fuel storage area free of grass, leaves, or excessive grease.
- Check the grass catcher frequently for wear or deterioration.
- Keep all parts in good working condition and all hardware and hydraulic fittings tightened. Replace all worn or damaged parts and decals.
- If the fuel tank has to be drained, do this outdoors.
- Be careful during adjustment of the machine to prevent entrapment of the fingers between moving blades and fixed parts of the machine.
- On multi-cylinder/multi-reel machines, take care as rotating one cylinder/reel can cause other cylinders/reels to rotate.
- Disengage drives, lower the cutting units, set parking brake, stop engine and remove key and disconnect spark plug wire. Wait for all movement to stop before adjusting, cleaning or repairing.
- Clean grass and debris from cutting units, drives, silencers/mufflers, and engine to help prevent fires. Clean up oil or fuel spillage.
- Use jack stands to support components when required.
- Carefully release pressure from components with stored energy.
- Disconnect battery and remove spark plug wire before making any repairs. Disconnect the negative terminal first and the positive last. Reconnect positive first and negative last.
- Use care when checking the cylinders/reels. Wear gloves and use caution when servicing them.
- Keep hands and feet away from moving parts. If possible, do not make adjustments with the engine running.
- Charge batteries in an open well ventilated area, away from spark and flames. Unplug charger before connecting or disconnecting from battery. Wear protective clothing and use insulated tools.

Toro Riding Mower Safety

The following list contains safety information specific to Toro products or other safety information that you must know that is not included in the CEN, ISO, or ANSI standard.

This product is capable of amputating hands and feet and throwing objects. Always follow all safety instructions to avoid serious injury or death.

Use of this product for purposes other than its intended use could prove dangerous to user and bystanders.

Warning

Engine exhaust contains carbon monoxide, which is an odorless, deadly poison that can kill you.

Do not run engine indoors or in an enclosed area.

- Know how to stop the engine quickly.

- Do not operate the machine while wearing tennis shoes or sneakers.
- Wearing safety shoes and long pants is advisable and required by some local ordinances and insurance regulations.
- Handle fuel carefully. Wipe up any spills.
- Check the safety interlock switches daily for proper operation. If a switch should fail, replace the switch before operating the machine. After every two years, replace all four interlock switches in the safety system, whether they are working properly or not.
- Before starting the engine, sit on the seat.
- Using the machine demands attention. To prevent loss of control:
  - Do not drive close to sand traps, ditches, creeks, or other hazards.
  - Reduce speed when making sharp turns. Avoid sudden stops and starts.
  - When near or crossing roads, always yield the right-of-way.
  - Apply the service brakes when going downhill to keep forward speed slow and to maintain control of the machine.
- The grass baskets must be in place during operation of the cylinders/reels or thatchers for maximum safety. Shut the engine off before emptying the baskets.
- Raise the cutting units when driving from one work area to another.
- Do not touch the engine, silencer/muffler, or exhaust pipe while the engine is running or soon after it has stopped because these areas could be hot enough to cause burns.
- Stay clear of the rotating screen at the side of the engine to prevent direct contact with your body or clothing.
- If the engine stalls or loses headway and cannot make it to the top of a slope, do not turn the machine around. Always back slowly, straight down the slope.
- When a person or pet appears unexpectedly in or near the mowing area, **stop mowing.** Careless operation, combined with terrain angles, ricochets, or improperly positioned guards can lead to thrown object injuries. Do not resume mowing until the area is cleared.

Maintenance and Storage

- Make sure all hydraulic line connectors are tight and all hydraulic hoses and lines are in good condition before applying pressure to the system.
- Keep your body and hands away from pin hole leaks or nozzles that eject hydraulic fluid under high pressure. Use paper or cardboard, not your hands, to search for leaks. Hydraulic fluid escaping under pressure can have sufficient force to penetrate the skin and cause serious injury. Seek immediate medical attention if fluid is injected into skin.
- Before disconnecting or performing any work on the hydraulic system, all pressure in the system must be relieved by stopping the engine and lowering the cutting units and attachments to the ground.
- Check all fuel lines for tightness and wear on a regular basis. Tighten or repair them as needed.
- If the engine must be running to perform a maintenance adjustment, keep hands, feet, clothing, and any parts of the body away from the cutting units, attachments, and any moving parts, especially the screen at the side of the engine. Keep everyone away.
- To ensure safety and accuracy, have an Authorized Toro Distributor check the maximum engine speed with a tachometer. Maximum governed engine speed should be 2900 RPM.
- If major repairs are ever needed or if assistance is desired, contact an Authorized Toro Distributor.
- Use only Toro-approved attachments and replacement parts. The warranty may be voided if used with unapproved attachments.

Sound Pressure Level

This unit has an equivalent continuous A–weighted sound pressure level at the operator ear of 86 dBA, based on measurements of identical machines per Directive 98/37/EC and amendments.

Vibration Level

This unit does not exceed a vibration level of 2.5 m/s^2 at the hands based on measurements of identical machines per ISO 5349 procedures.

This unit does not exceed a vibration level of .5 m/s^2 at the posterior based on measurements of identical machines per ISO 2631 procedures.

Safety and Instruction Decals

Safety decals and instructions are easily visible to the operator and are located near any area of potential danger. Replace any decal that is damaged or lost.

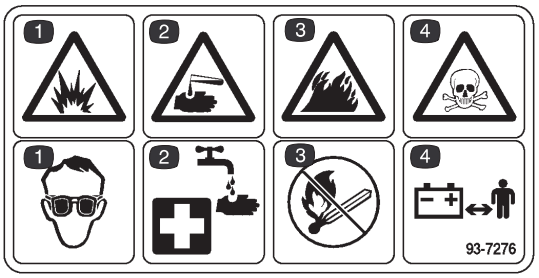

93-7276

1. Explosion hazard—wear eye protection.
2. Caustic liquid hazard—flush with water and seek first aid.
3. Fire hazard—no sparks, flame, or smoking
4. Poison—keep children a safe distance from the battery.

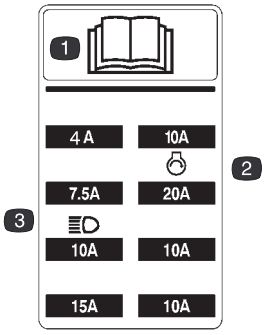

105–5229

1. Read the operator's manual for further instructions.
2. Fuse for starter
3. Fuse for headlights (optional)

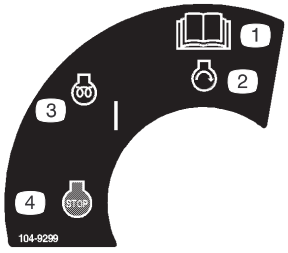

104-9299

1. Read the operator's manual for further instructions.
2. Engine start
3. Engine preheat/on
4. Stop



93-6693

1. Warning—crushing of fingers and hands. Stop the reels before proceeding.



93-6680

1. Diesel fuel only



93-6686

1. Hydraulic oil level—read the operator's manual for further instructions.

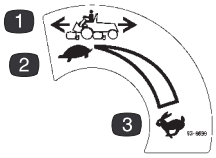

93-6699

1. Traction speed
2. Slow
3. Fast



93-9425

1. Danger—read the operator's manual.
2. Hydraulic hoses are under pressure—stay away from moving parts.

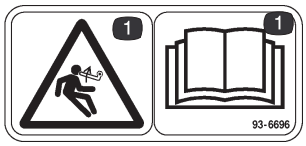

93-6696

1. Danger—spring loaded device. Read the operator's manual for further instructions.



93-6687

1. Do not step on lift arms.

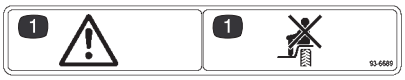

93-6689

1. Danger—do not carry riders.



93-6681

1. Cutting/dismemberment hazard—stay away from moving parts.

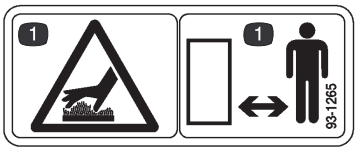

93-1265

1. Hot surface hazard—stay away.

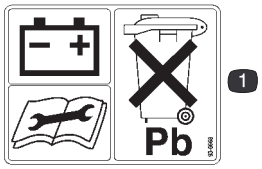

93-6668

1. The battery contains lead. Do not throw it in the garbage.



104-9298

1. Read the operator's manual for further instructions.

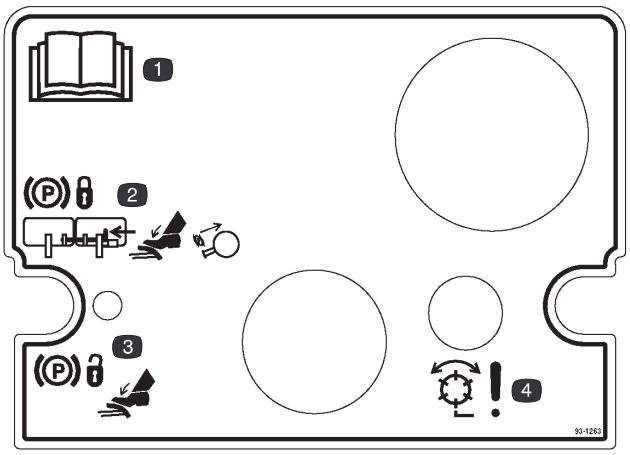

93-1263

1. Read the operator's manual for further instructions.
2. To engage the parking brake, connect the brake pedals with the locking pin, push down on both pedals, and pull the parking brake latch out.
3. To release the parking brake, press both pedals until the parking brake latch retracts.
4. Danger—reels enabled

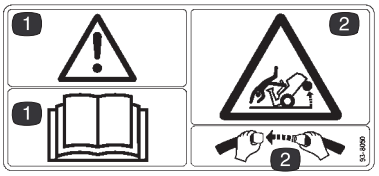

93-8050
(Model No. 03807 Only)

1. Danger—read the operator's manual for further instructions.
2. Tipping hazard—wear the seat belt.

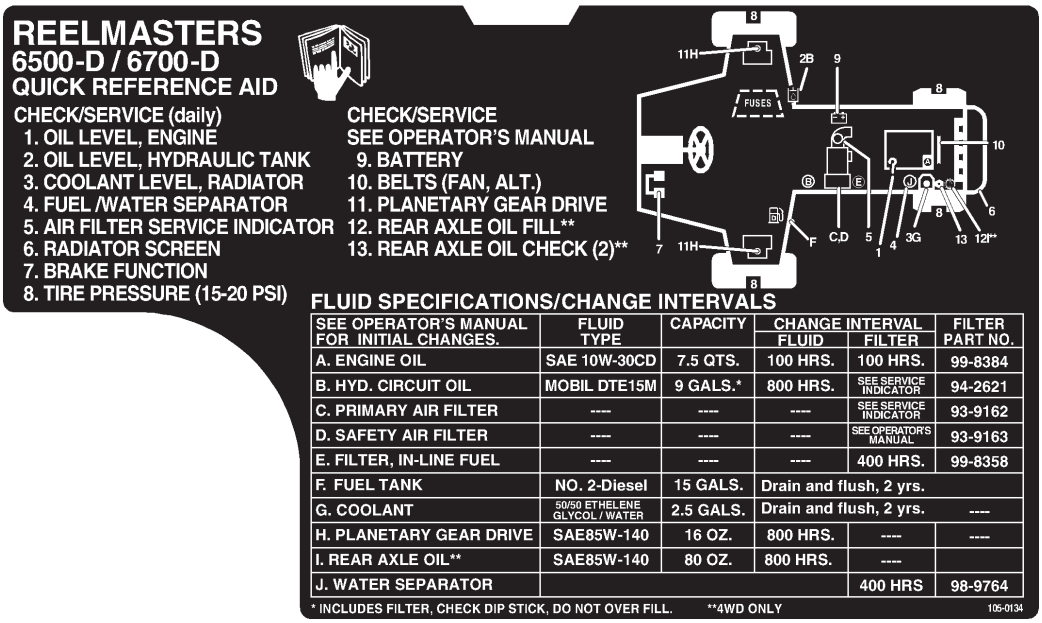

105-0134

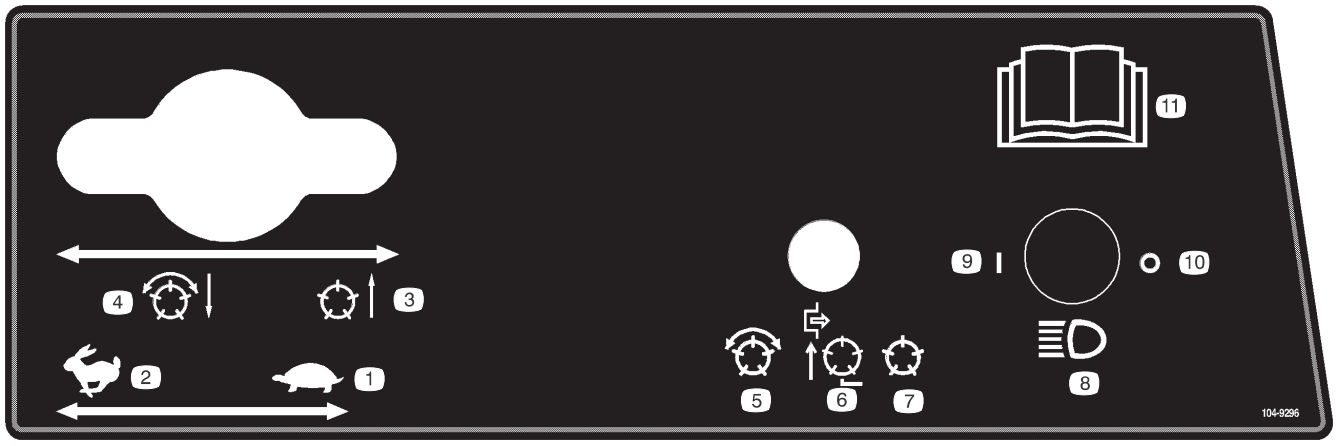

104-9296

1. Throttle—slow
2. Throttle—fast
3. Reels raised and off
4. Reels lowered and on when enabled—forward and backlap
5. Reels—enabled
6. Reels disabled—lift only
7. Reels disabled—lift and lower
8. Headlights (optional)
9. Headlights—on
10. Headlights—off
11. Read the operator's manual for further instructions.

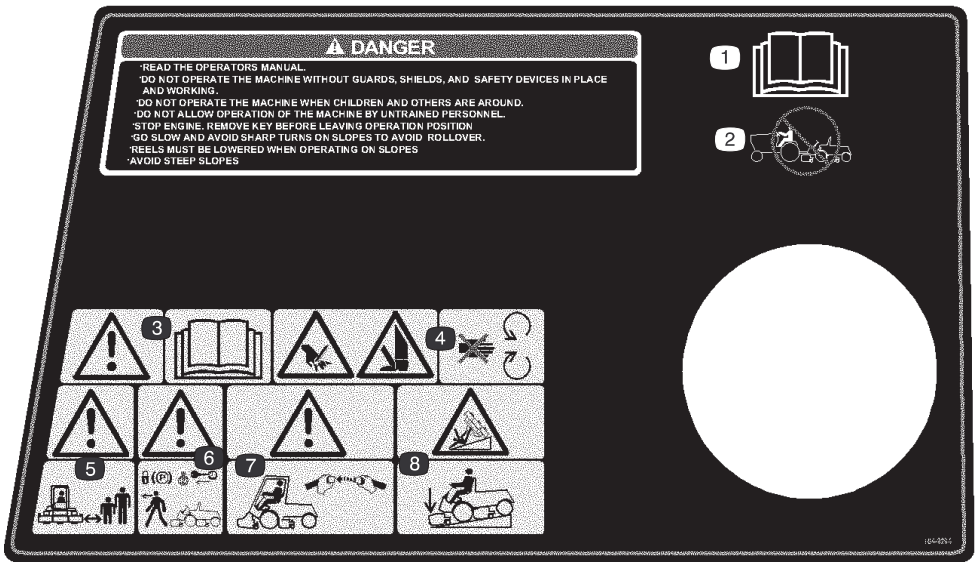

104-9294

1. Read the *Operator's Manual.*
2. Do not tow the machine.
3. Warning—read the *Operator's Manual.*
4. Cutting hazard of hand or foot—stay away from moving parts.
5. Warning—keep bystanders a safe distance from the machine.
6. Warning—lock the parking brake, stop the engine, and remove the ignition key before leaving the machine.
7. Warning—use a roll over protection system and wear the seat belt.
8. Tipping hazard—lower the cutting unit when driving down slopes.

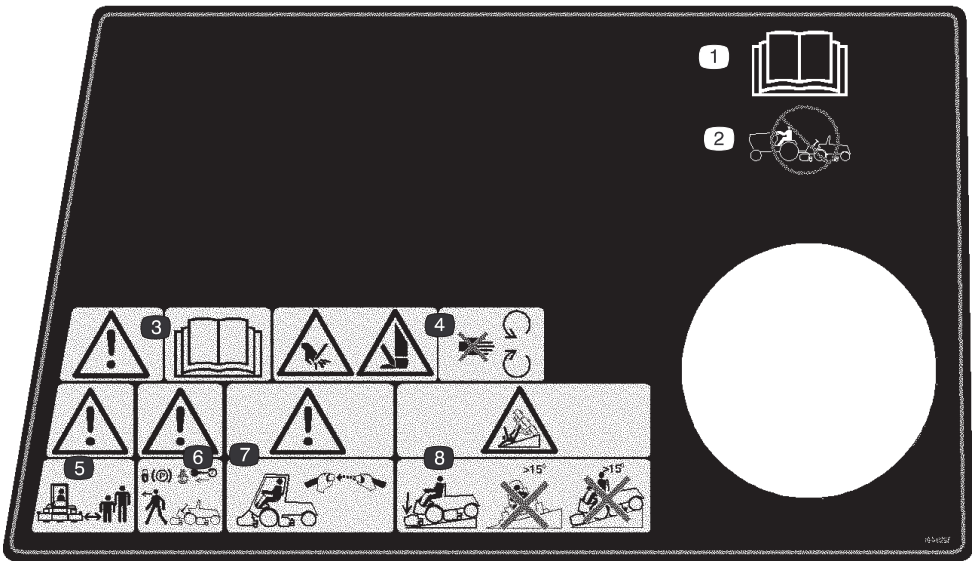

104-9295

Replaces 104–9294 for CE

1. Read the *Operator's Manual.*
2. Do not tow the machine.
3. Warning—read the *Operator's Manual.*
4. Cutting hazard of hand or foot—stay away from moving parts.
5. Warning—keep bystanders a safe distance from the machine.
6. Warning—lock the parking brake, stop the engine, and remove the ignition key before leaving the machine.
7. Warning—use a roll over protection system and wear the seat belt.
8. Tipping hazard—lower the cutting unit when driving down slopes and do not drive across or down slopes greater than 15 degrees.

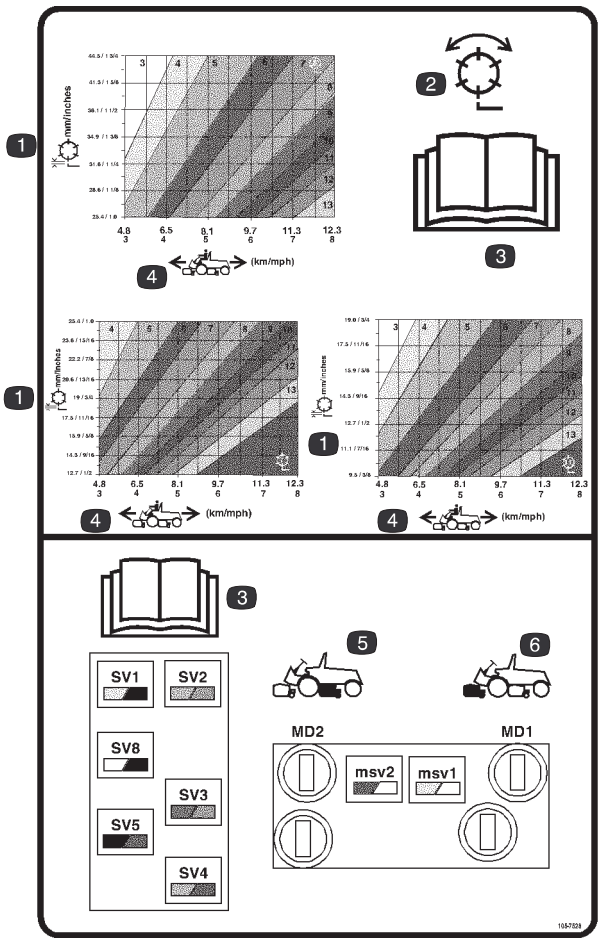

105-7528

1. Reel—height of cut
2. Reel—mow and backlap
3. Read the *Operator's Manual.*
4. Machine speed
5. Rear reels circuit controls
6. Front reels circuit controls

Specifications

Note: Specifications and design subject to change without notice.

General Specifications

Engine	Kubota four cylinder, over head valve, liquid cooled, turbo diesel engine. 42.5 hp @ 3000 rpm. Governed to 3200 rpm. Heavy duty, 3-stage, remote mounted air cleaner. High water temperature shutdown switch.
Main frame	All welded formed steel frame, includes tie-down loops
Cooling system	Radiator capacity is approximately 10 qts. (9.4 l) of 50/50 mixture of ethylene glycol anti–freeze. Remote mounted 1 qt. (.9 l) expansion tank. Removeable oil cooler/radiator intake screen. Air to oil cooler, mounted to front of radiator, tips forward for cleaning
Fuel system	Fuel tank capacity is 15 gal. (57 l) of #2 diesel fuel. Equipped with a fuel filter/water separator to capture water in the fuel.
Traction system	Servo-controlled hydrostatic system driving double planetary gear reduction front wheel drives. Foot pedal control of forward/reverse ground speed. Toro 4-Matic 4-Wheel Drive System only: Rear drive axle coupled to hydrostatic transmission via overrunning clutch for full time on-demand 4 wheel drive. A Roll Over Protective Structure (ROPS) and seat belt are standard.
Ground speed	0–10 MPH forward, 0–4 MPH reverse
Cutting unit drive system	Reel motors feature quick disconnect for removal or installation onto cutting unit. Cutting units can be driven from either end.
Seat	Deluxe high back suspension seat with adjustable fore and aft travel, weight and height. Tool box at left side of seat.
Steering system	Power steering with dedicated power source
Tires	Two rear steering tires: 20 x 10.00-10, tubeless, 6-ply rating. Two front traction drive tires: 29 x 14.00-15 tubeless, 6-ply rating. Recommended tire pressure for front and rear tires is 15–20 psi.
Brakes	Individual totally enclosed, multi-disc, wet brakes and parking brakes on front traction wheels. Hydrostatic braking through traction drive.
Electrical features	12 volt, 530 cold cranking amperes at 0° F (–18° C), 85 minute reserve capacity at 80° F (27° C), maintenance free battery. 55 amp. alternator with I.C. regulator/rectifier. Automotive type electrical system. Seat switch, reel and traction interlock switches.
Controls	Foot operated traction and brake pedals. Hand operated throttle, speed control lever, parking brake lock, ignition switch with automatic preheat cycle, single joy stick control for cutting unit on/off and lift lower. Cutting unit backlap switch located under hood. Height-of-cut selector knob located under control panel.
Gauges	Hour meter, speedometer, fuel gauge, temperature gauge, 4 bank warning lamp: oil pressure, water temperature, amps, and glow plug.
Diagnostics	The Automatic Control Electronics, ACE™ system allows precise timing and control of machine functions for maximum reliability. Optional diagnostic display connects to an electronic control unit to pin point any electrical problems quickly and easily. Available DATA LOG™ system allows mechanic to find intermittent problems.

Measurements

Width-of-cut	96 in.
Overall width	
Transport	89 in.
Operational	110 in.
Overall length	120 in.
Height	
Without ROPS installed	60 in.
With ROPS installed	84 in.
Weight	
Model No. 03806	3200 lb.*
Model No. 03807	3300 lb.*

* With 5 blade cutting units and full fluid levels

Optional Equipment

5 Blade Cutting Unit (7 in.)	Model No. 03860
7 Blade Cutting Unit (7 in.)	Model No. 03861
11 Blade Cutting Unit (7 in.)	Model No. 03862
Dethatching Cutting Unit	Model No. 03872
Grass Basket Kit	Model No. 03882
Rear Roller Brush Kit	Model No. 03875
Arm Rest Kit	Model No. 30707
Turfdefender Electronic Leak Detector	Model No. 03521
ROPS w/ Cloth Canopy	Part No. 92–7571
Rear Wheel Weight Kit	Part No. 104–1478
High Torque Reel Motor	Part No. 98-9998
Gauge Bar Assembly	Part No. 98-1852
Angle Indicator	Part No. 99-3503
Backlapping Brush Assembly	Part No. TOR299100*
Bedknife Screw Tool	Part No. TOR510880*
Cutting Unit Tool Kit	Part No. TOR4070*
Reel Drive Adapter	Part No. TOR4074*
Spark Arrester	Part No. 104–5201

* Available from OTC Tool Co.

Setup

Note: Determine the left and right sides of the machine from the normal operating position.

Note: Use this chart as a checklist to ensure that all parts necessary for assembly have been received. Without these parts, total set-up cannot be completed. Some parts may have already been assembled at the factory.

Description	Qty.	Use
Counterweight Large o-ring	5 10	Mounting the counterweights and motors to the cutting units.
Lynch pin Steering locking pin	5 5	Mounting the cutting units to the traction unit Locking the cutting units
Diagnostic ACE display overlay	1	Diagnosing machine malfunctions (store in service shop until needed)
Key	1	Use with hood lock
Key ring	1	Contains keys
Gauge bar Screw Wing nut	1 2 2	Setting cutting units, refer to Cutting Unit Operator's manual
EEC decals	4	Apply to machine for CE
EEC certificate	2	
Operator's manual (traction unit)	2	Read before operating the machine.
Parts catalog	1	
Registration card	1	Fill out and return to Toro.

Installing the Cutting Units

Cutting unit models 03860, 03861, and 03862 can be installed at any of the five mounting locations on the traction unit. Figure 2 shows the orientation of the hydraulic drive motor for each of the five locations. For any of the locations requiring the motor to be mounted on the right end of the cutting unit, install a counter weight on the left end of the cutting unit. For the locations requiring the motor to be mounted on the left end, install a counter weight on the right end of the cutting unit.

Note: Counterweight mounting capscrews are shipped installed on the right bearing housing of the cutting units. The capscrews on left bearing housing are to be used for securing the hydraulic motor.

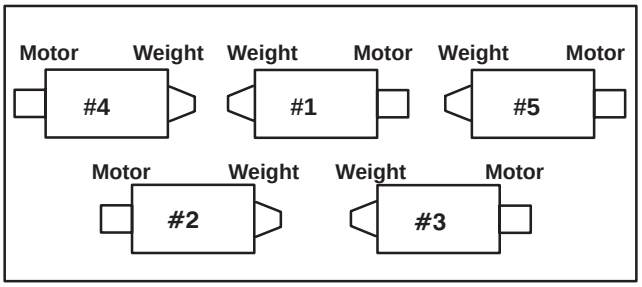

Figure 2

1. Remove cutting units from cartons. Assemble and adjust per Cutting Unit Operator's Manual.
2. Remove protective plugs from each end of cutting unit.

3. Lubricate and install a large O-ring into bearing housing groove on each end of cutting unit (Fig. 3 & 6).

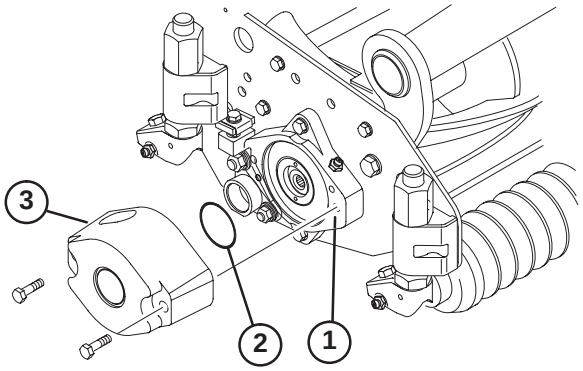

Figure 3

1. Bearing housing
2. Large o-ring
3. Counterweight

Note: Before installing cutting unit motors or counterweights, lubricate internal splines of cutting unit reel shafts with grease.

4. Install a counter weight onto appropriate end of each cutting unit with capscrews provided (Fig. 3).

5. Thoroughly grease the cutting unit reel bearings prior to installation on the traction unit. Grease should be evident at the inboard reel seals; refer to Cutting Unit Operator's Manual for greasing procedure.

6. Insert a thrust washer onto horizontal shaft of pivot knuckle as shown in Figure 4.

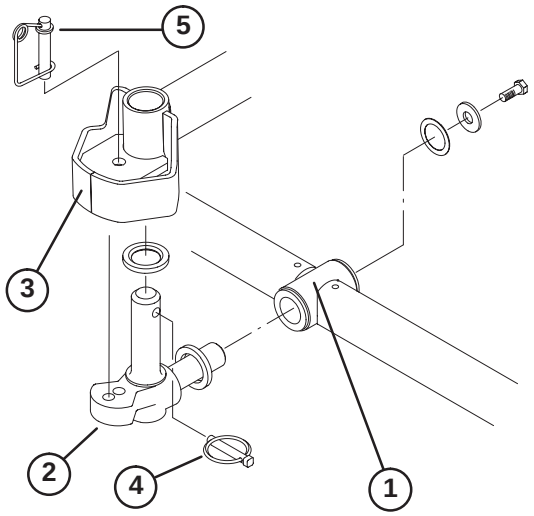

Figure 4

1. Carrier frame
2. Pivot knuckle
3. Lift arm steering plate
4. Lynch pin
5. Steering locking pin

---

7. Insert the horizontal shaft of the pivot knuckle into the mounting tube of the carrier frame (Fig. 4).

8. Secure pivot knuckle to carrier frame with a thrust washer, flat washer and a flange head capscrew (Fig. 4).

9. Insert a thrust washer onto vertical shaft of pivot knuckle (Fig. 4).

10. If removed, insert the vertical shaft of the pivot knuckle into lift arm pivot hub (Fig. 4). Guide the pivot knuckle in place between the two rubber centering bumpers in the under side of the lift arm steering plate.

11. Insert the lynch pin into the cross hole on the pivot knuckle shaft (Fig. 4).

12. Remove nut securing turf compensation spring mounting bracket to cutting unit stabilizer ear (Fig. 5). Insert tipper chain onto capscrew and secure with nut removed.

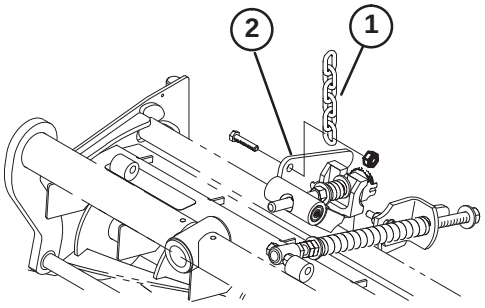

Figure 5

1. Lift chain
2. Cutting unit stabilizer ear

---

13. Mount the motor to the drive end of the cutting unit and secure with two capscrews provided (Fig. 6).

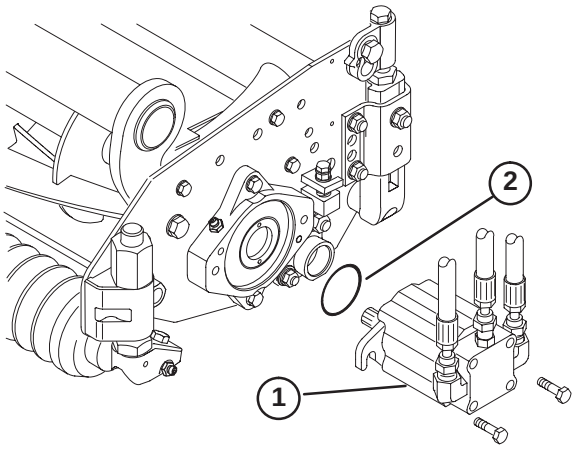

Figure 6

1. Motor
2. O-ring

Note: If fixed cutting unit position is required, insert steering locking pin into pivot knuckle mounting hole (Fig. 4).

14. Hook spring wire around bottom of steering locking pin (Fig. 4).

Alternate Adjustments

Tractors are setup at the factory appropriately for most fairway mowing applications.

The following adjustments are available for fine-tuning of the machine to the application:

Adjust Turf Compensation Spring

The Turf Compensation Spring (Fig. 7), connecting carrier frame to cutting unit, controls the amount of fore-aft rotation available, as well as the amount of ground clearance in transport and turn around.

The Turf Compensation Spring also transfers weight from the front to rear roller. This helps to reduce a wave pattern in the turf, also known as bobbing.

Important **Make spring adjustments with cutting unit mounted to traction unit and lowered to shop floor.** Refer to Traction Unit Operator's Manual for mounting instructions.

1. Tighten lock nut on rear of spring rod until the gap (C) between rear of spring bracket and front of washer is 1 in. (25 mm) (Fig. 7).

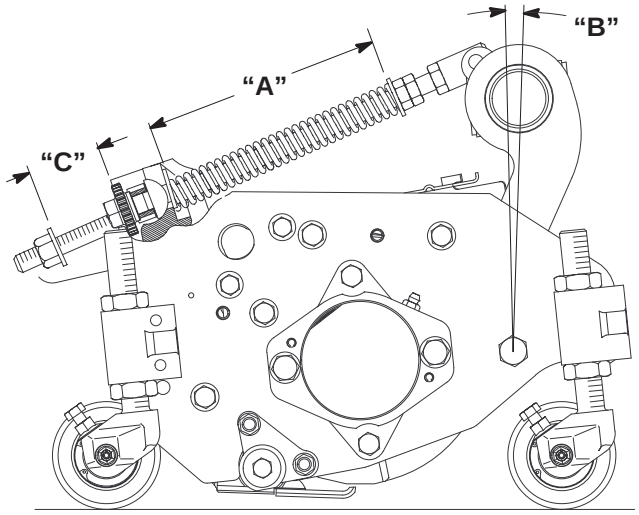

Figure 7

2. Tighten hex nuts on front end of spring rod until the compressed length (A) of spring is 8 in. (203 mm) (Fig. 7).

Note: When cutting rough or undulating turf, increase compressed length (A) of spring to 8-1/2 in. (216 mm) and gap (C) between rear of spring bracket and front of washer to 1-1/2 in. (38 mm) (Fig. 7).

Note: As compressed spring length (A) DECREASES, weight transfer from front roller to rear roller INCREASES and carrier frame/cutting unit rotation angle (B) DECREASES.

Note: As gap (C) between spring bracket and washer INCREASES, cutting unit ground clearance DECREASES and carrier frame/cutting unit rotation angle (B) INCREASES.

Adjusting the Cutting Unit Lowering Rate

The cutting unit lift circuits are equipped with adjustable valves to ensure the cutting units lower evenly. Adjust as follows:

1. Run traction unit until operating temperature is reached.

Front Cutting Units

2. Locate valves under seat for adjusting front cutting units (Fig. 8).
3. Loosen set screws securing knob.
4. Rotate appropriate valve clockwise to slow down drop rate of cutting units.
5. Verify the lift rate adjustment by raising and lowering cutting units several times. Readjust as required. Tighten set screw securing adjustment.

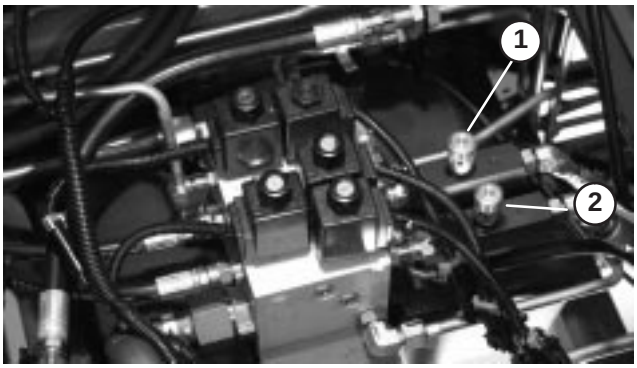

Figure 8

1. Adjustment valve for front center cutting unit
2. Adjustment valve for front outside cutting units

Rear Cutting Unit

1. Locate valve in front of rear axle for rear cutting units (Fig. 9).
2. Loosen locking ring securing knob (Fig. 9).

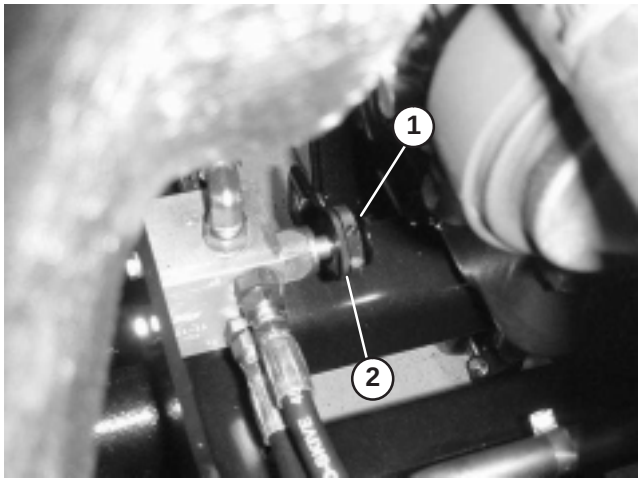

Figure 9

1. Adjustment valve for rear cutting unit
2. Locking ring

3. Rotate valve clockwise to slow down drop rate of rear cutting units.
4. Verify the lift rate adjustment by raising and lowering cutting units several times. Readjust as required. Tighten locking ring securing adjustment.

Lifted Height of Outer Front Cutting Units (Enable Position)

The turnaround height of the front outer cutting units (#4 & #5) may be increased to provide additional ground clearance on contoured fairways.

Note: The RM CONFIG time delay should not be changed from the original setting of 0 when using this method to adjust turn around height.

To increase/adjust the turn around height of the front cutting units proceed as follows:

- Position machine on a level surface, lower the cutting units and stop the engine.
- Loosen the carriage bolt nut securing the lift arm switch bracket to the #4 lift arm (left front) (Fig. 10).

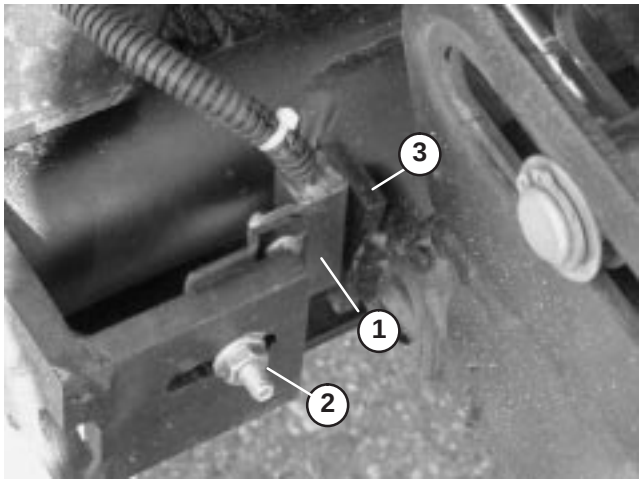

Figure 10

1. Lift arm switch
2. Carriage bolt nut
3. Lift arm flag

- Move the lift switch bracket up in the slot to the desired position.
- Set the distance between the lift arm switch and the flag on the lift arm to approximately .062 inches.
- Tighten carriage bolt nut.

Adjusting the Travel of the Front Three Cutting Units

Additional downward travel of the front three cutting units may be desirable in highly contoured locations. If any of the front three cutting units lift off the ground when cresting a hill, the front carrier frame may be lowered by removing mounting bolts and repositioning frame in the bottom set of holes in the main frame (Fig. 11). Contact your distributor for assistance.

Note: Moving the carrier frame down will decrease the amount of clearance between the cutting units and the ground in turnaround and transport positions and may require adjusting the lift chain length on the cutting unit.

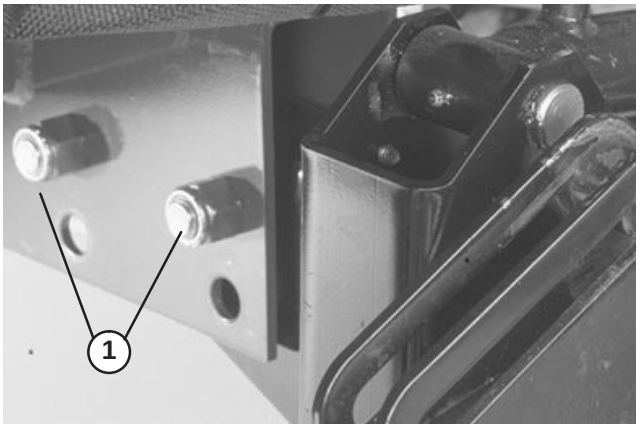

Figure 11

1. Carrier frame mounting bolts

Rear Ballast

The Reelmaster 6500–D Traction Units comply with the ANSI B71.4–1999 Standard when the following is installed on machine.

- 100 lbs. of calcium chloride ballast is added to rear wheels.
- Wheel weight kit (Part No. 104–1478)

Important If a puncture occurs in a tire with calcium chloride, remove unit from turf area as quickly as possible. To prevent possible damage to turf, immediately soak affected area with water.

Before Operating

Note: Determine the left and right sides of the machine from the normal operating position.

Checking the Engine Oil

Crankcase capacity is 7.5 qt. (7 L) with filter.

1. Park machine on a level surface. Release hood latch and open hood (Fig. 12).

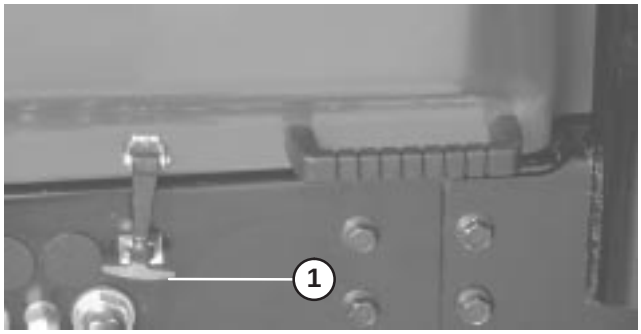

Figure 12

1. Hood latch

2. Remove dipstick (Fig. 13), wipe clean and reinstall dipstick. Pull it out again and check oil level on dipstick. Oil level should be up to FULL mark on dipstick.

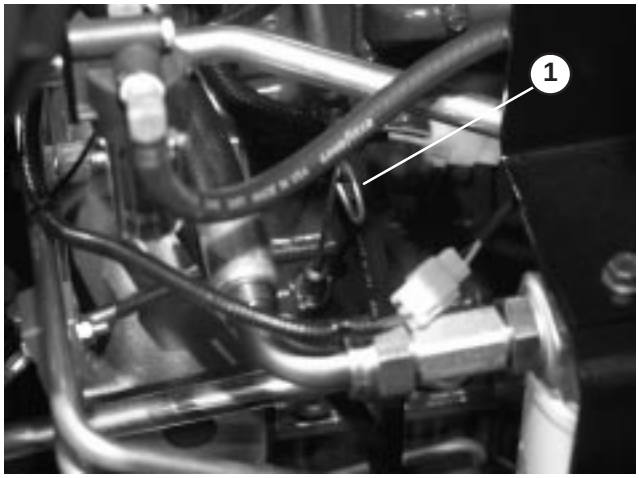

Figure 13

1. Dipstick

3. If oil level is low, remove filler cap and add SAE 10W30 CD, CE, CF, CF-4 or CG-4 oil until level reaches FULL mark on dipstick. **Do not overfill.**

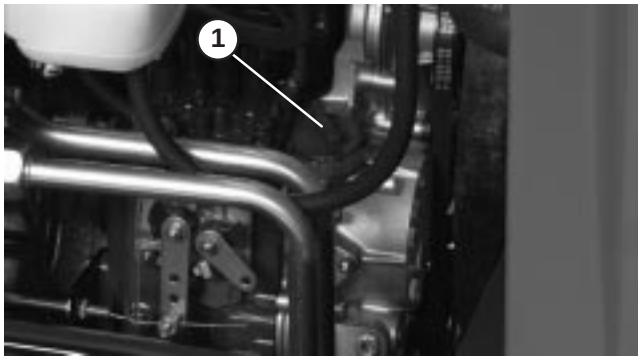

Figure 14

1. Filler cap

4. Install filler cap.

5. Close hood and secure latch.

Checking the Cooling System

Clean debris off screen, oil cooler and front of radiator daily, more often if conditions are extremely dusty and dirty; refer to section on Engine Cooling System.

The cooling system is filled with a 50 / 50 solution of water and permanent ethylene glycol anti–freeze. Check level of coolant in radiator and expansion tank at the beginning of each day before starting the engine. Capacity of cooling system is 10 quarts (9.4 l).

Caution

If the engine has been running, pressurized hot coolant can escape and cause burns if the radiator cap is removed.

Allow the engine to cool at least 15 minutes or until the radiator cap is cool enough to touch without burning hands.

1. Carefully remove radiator cap and expansion tank cap.

2. Check level of coolant in radiator and in expansion tank. Radiator should be filled to the top of the filler neck and the expansion tank filled to the FULL mark.

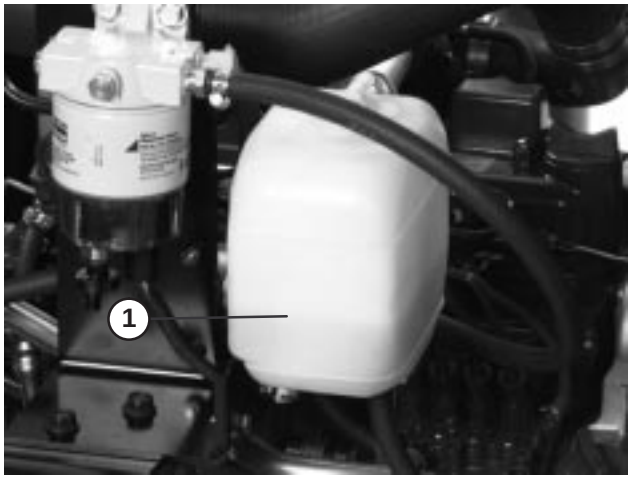

Figure 15

1. Expansion tank

3. If coolant level is low, remove expansion tank cap and radiator cap.

4. Fill expansion tank to the **full** mark and radiator to the top of the filler neck. **Do not overfill the expansion tank.**

Note: If air is trapped is system, remove vent plug (Fig. 16), from top of radiator side tank, to allow trapped air to escape. Reinstall vent plug using Teflon thread sealant.

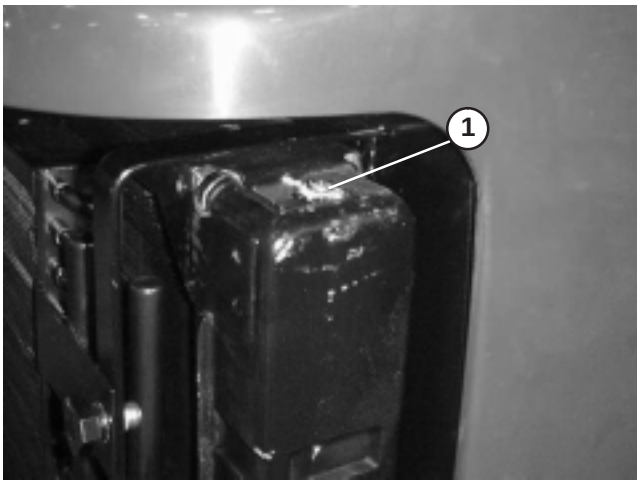

Figure 16

1. Vent plug

5. Install radiator cap and expansion tank cap.

6. Close hood and secure latch.

Filling the Fuel Tank

Danger

Under certain conditions, diesel fuel and fuel vapors are highly flammable and explosive. A fire or explosion from fuel can burn you and others and can cause property damage.

- **Use a funnel and fill the fuel tank outdoors, in an open area, when the engine is off and is cold. Wipe up any fuel that spills.**
- **Do not fill the fuel tank completely full. Add fuel to the fuel tank until the level is 1 in. (25 mm) below the bottom of the filler neck. This empty space in the tank allows the fuel to expand.**
- **Never smoke when handling fuel, and stay away from an open flame or where fuel fumes may be ignited by a spark.**
- **Store fuel in a clean, safety-approved container and keep the cap in place.**

Capacity of fuel tank is 15 gal (57 l).

1. Remove fuel tank cap (Fig. 17).

2. Fill tank to about one inch below top tank, not filler neck with No. 2 diesel fuel. Then install cap.

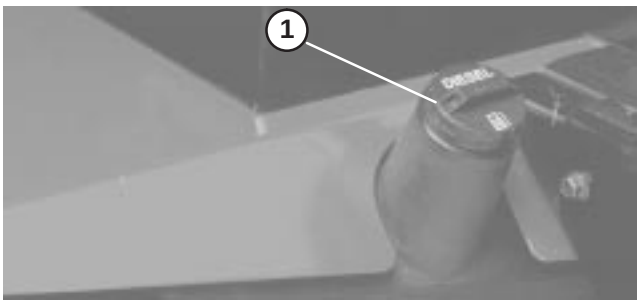

Figure 17

1. Fuel tank cap

Checking the Hydraulic Fluid

The machines reservoir is filled at the factory with approximately 8.5 gallons of high quality hydraulic fluid. **Check the level of hydraulic fluid before the engine is first started and daily thereafter.** Appropriate hydraulic oils are listed below.

The following list is not assumed to be all–inclusive. Hydraulic fluids produced by other manufacturers may be used if they cross find a cross reference equivalent to the products listed. Toro will not assume responsibility for

damage caused by improper substitutions, so use only products from reputable manufacturers who will stand behind their recommendation.

Multigrade Hydraulic Fluid – ISO VG 46

Normal Climate: 0 (–18°C) to 110°F (43°C)

Mobil	DTE 15M
Amoco	Rykon Premium ISO 46
Chevron	Rykon Premium Oil ISO 46
Conoco	Hydroclear AW MV46
Exxon	Univis N46
Pennzoil	AWX MV46
Shell	Tellus T 46
Texaco	Rando HDZ 46

Important The ISO VG 46 Multigrade fluid has been found to offer optimal performance in a wide range of temperature conditions. For operation in consistently high ambient temperatures, 65°F (18°C) to 120°F (49°C), ISO VG 68 hydraulic fluid may offer improved performance.

Note: Many hydraulic fluids are almost colorless, making it difficult to spot leaks. A red dye additive for the hydraulic system oil is available in 2/3 oz. (20 ml) bottles. One bottle is sufficient for 4–6 gal (15–22 1) of hydraulic oil. Order part no. 44–2500 from your authorized Toro distributor. Not recommended for biodegradable fluid (use food coloring).

Biodegradable Hydraulic Fluid – Mobil 224H

Important Mobil EAL 224H is the only biodegradable oil tested and approved by Toro. Contamination by mineral–based hydraulic fluids will change the biodegradability and toxicity of this oil. When changing from standard fluid to the biodegradable type, be certain to follow the approved flushing procedure published by Mobil. Contact your local Toro Distributor for details. This oil is available in 5 gallon (19 l) containers from your Toro Distributor, order part no. 100–7674.

1. Position machine on a level surface, lower the cutting units and stop the engine.
2. Clean area around filler neck and cap of hydraulic tank (Fig. 18). Remove cap from filler neck.

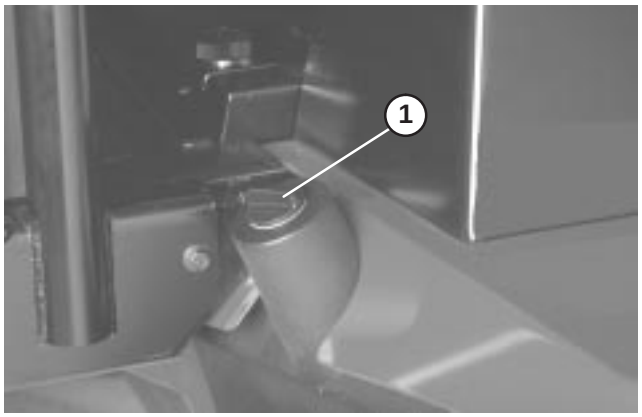

Figure 18

1. Hydraulic tank cap

3. Remove dipstick from filler neck and wipe it with a clean rag. Insert dipstick into filler neck; then remove it and check level of fluid. Fluid level should be within 1/4 inch of mark on dipstick.
4. If level is low, add appropriate fluid to raise level to full mark.
5. Install dipstick and cap onto filler neck.

Checking the Planetary Gear Drive Oil

Check oil if external leakage is noted. Use high quality SAE 85W-140 wt. gear lube as replacement.

Capacity of system is 16 oz.

1. With machine on level surface, position wheel so the check/drain plug (Fig. 19) is at either 2 or 10 o'clock position.
2. Remove the plug on the planetary (Fig. 19) and the check plug on the back side of the brake (Fig. 20). Oil should be at the bottom of the check plug hole on front and back side of the brake.
3. Add gear oil to the hole in the planetary, if necessary, to bring the oil up to the proper level. Install the plug.
4. Repeat steps 1–3 on the opposite gear assembly.

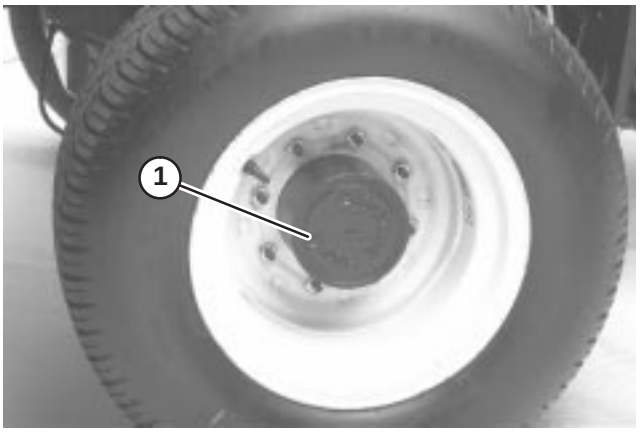

Figure 19

1. Check/drain plug

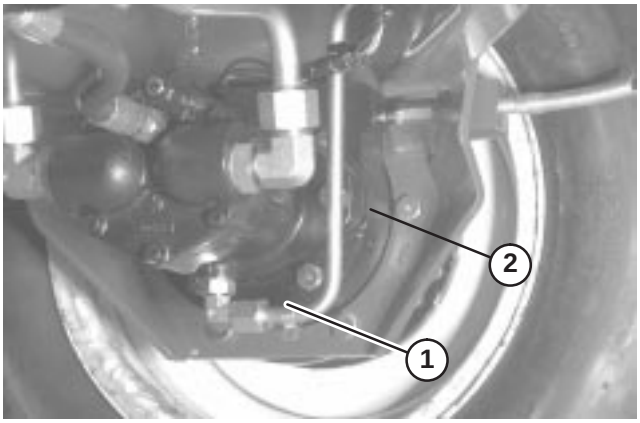

Figure 20

1. Brake housing
2. Check plug location

Checking the Rear Axle Lubricant

(Model No. 03807 Only)

The rear axle is shipped from the factory filled with SAE 85W-140 wt. gear lube. Check level before engine is first started and every 400 hours thereafter. Capacity is 80 oz. Visually inspect for leaks daily.

1. Position the machine on a level surface.
2. Remove a check plug (Fig. 21) from one end of axle and make sure lubricant is up to bottom of hole. If level is low, remove the fill plug (Fig. 21) and add enough lubricant to bring the level up to the bottom of the check plug holes.

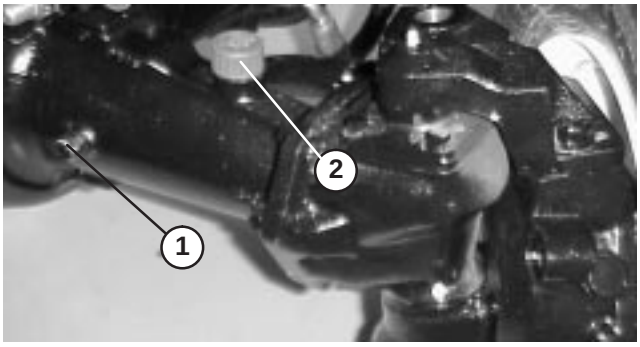

Figure 21

1. Check plug
2. Fill plug

Checking the Tire Pressure

The tires are over-inflated for shipping. Therefore, release some of the air to reduce the pressure. Correct air pressure in the front and rear tires is 15–20 psi.

Important Maintain even pressure in all tires to ensure a good quality-of-cut and proper machine performance. **Do not under inflate.**

Checking the Reel to Bedknife Contact

Each day before operating, check reel to bedknife contact, regardless if quality of cut had previously been acceptable. There must be light contact across the full length of the reel and bedknife (refer to Adjusting Reel to Bedknife in Cutting Unit Operator's Manual).

Checking the Torque of the Wheel Nuts or Bolts

Warning

Failure to maintain proper torque of the wheel nuts could result in personal injury.

Torque the front wheel nuts and rear wheel bolts to 85–100 ft.-lb. after 1–4 hours of operation and again after 10 hours of operation. Torque every 200 hours thereafter.

Operation

Note: Determine the left and right sides of the machine from the normal operating position.

Controls

Traction Pedal

The traction pedal (Fig. 22) controls forward and reverse operation. Depress top of pedal to move forward and bottom to move backward. Ground speed depends on how far pedal is depressed. For no load, maximum ground speed, fully depress pedal while throttle is in FAST.

To stop, reduce foot pressure on traction pedal and allow it to return to center position.

Forward Speed Limiter

Preset the forward speed limiter (Fig. 22) to limit the amount the traction pedal can be depressed in the forward direction to maintain a constant mowing speed.

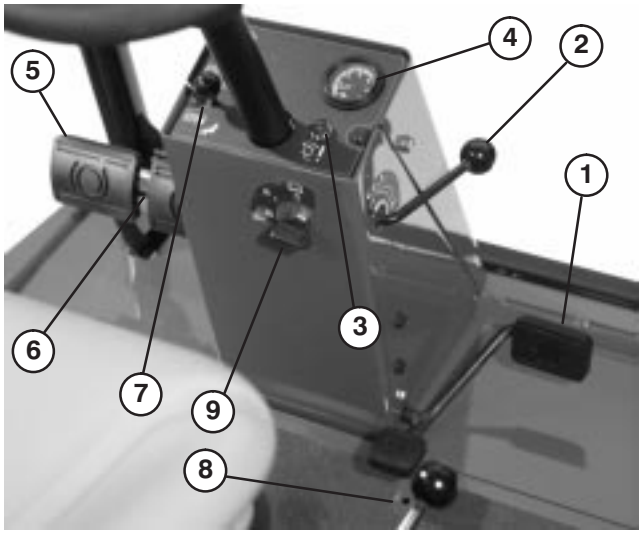

Figure 22

1. Traction pedal
2. Forward speed limiter
3. Red control light
4. Speedometer
5. Brake pedals
6. Parking brake latch
7. Locking pin
8. Reverse speed limiter
9. Key switch

Red Diagnostic Light

When the red diagnostic light (Fig. 22) flashes, it may indicate that the machine is being operated faster than the maximum speed value initially programmed into the ECU. The light will also flash if an electrical malfunction has been detected and when glow plugs are on.

Key Switch

The key switch (Fig. 22) has three positions: OFF, ON/Preheat and START.

Speedometer

The speedometer (Fig. 22) indicates ground speed at which machine is traveling.

Brake Pedals

Two brake pedals (Fig. 22) operate individual wheel brakes for turning assistance, parking, and to aid in obtaining better sidehill traction. Locking pin connects the pedals for parking brake operation and transport.

Parking Brake Latch

A knob on the left side of console actuates parking brake lock (Fig. 22). To engage parking brake, connect pedals with locking pin, push down on both pedals and pull parking brake latch out. To release parking brake, depress both pedals until parking brake latch retracts.

Reverse Speed Limiter

Adjust the screw (Fig. 22) to limit the amount the traction pedal can be depressed in the rearward direction to limit speed.

Lower Mow/Raise Control Lever (Joystick)

The lever (Fig. 23) raises and lowers the cutting units and also starts and stops the reels.

Fuel Gauge

The fuel gauge (Fig. 23) indicates level of fuel in tank.

Engine Oil Pressure Warning Light

This light (Fig. 23) indicates dangerously low engine oil pressure.

Throttle Control

Move the control (Fig. 23) forward to increase engine speed, rearward to decrease speed.

Engine Coolant Temperature Warning Light

The light (Fig. 23) illuminates and the engine shuts down when the coolant reaches a dangerously high temperature.

Glow Plug Indicator Light

When the indicator light (Fig. 23) is lit, indicates glow plugs are on.

Charge Indicator

The charge indicator (Fig. 23) illuminates when system charging circuit malfunctions.

Enable/Disable Switch

The enable/disable switch (Fig. 23) is used in conjunction with lower mow/raise control lever (Joystick) to operate reels. Reels can be raised but not lowered when in mid position.

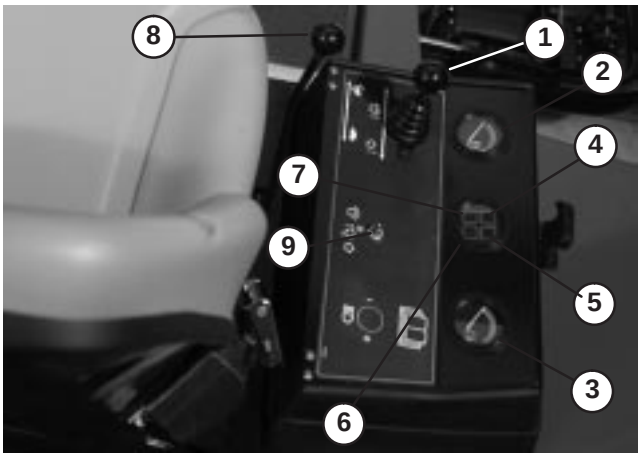

Figure 23

1. Lower mow/raise control lever
2. Fuel gauge
3. Engine coolant temperature gauge
4. Engine oil pressure warning light
5. Engine coolant temperature warning light
6. Glow plug indicator light
7. Charge indicator
8. Throttle control
9. Enable/disable switch

Hour Meter

The hour meter (Fig. 24) shows total hours that machine has been operated.



Figure 24

1. Hour meter

Backlap Knobs

The backlap knobs (Fig. 25) are used in conjunction with lower mow / raise control lever for backlapping operation. Refer to Cutting Unit Maintenance, Backlapping.

Reel Speed Controls

Controls RPM of front and rear cutting units (Fig. 25). #1 position is for backlapping. Remaining settings are for mowing operations. See section in manual for operating instructions and decal under seat for proper settings.

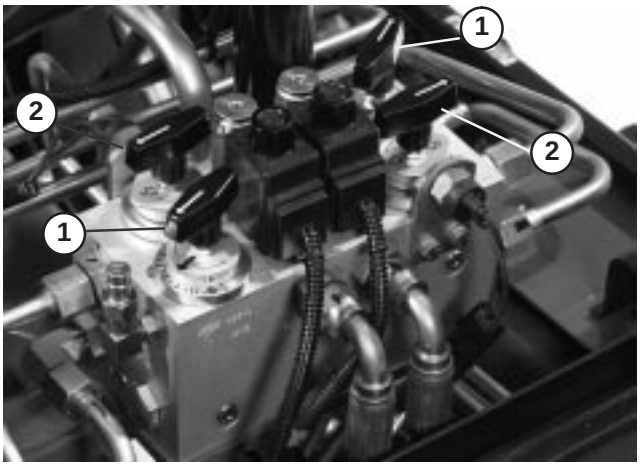

Figure 25

1. Reel control knobs
2. Backlap knobs

Seat

The seat adjusting lever (Fig. 26) allows 4 inch fore and aft adjustment. The seat adjusting knob (Fig. 26) adjusts seat for operators weight. To adjust seat fore and aft, pull lever on left side of seat assembly outward. After moving seat to desired location, release lever to lock seat into position. To adjust for operators weight, turn spring tension knob; clockwise to increase tension, counterclockwise to decrease spring tension.

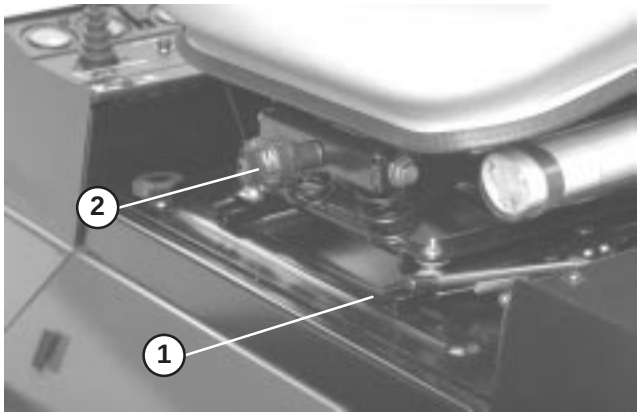

Figure 26

1. Seat adjusting lever
2. Seat adjusting knob

Starting and Stopping

1. Sit on the seat, keep foot off traction pedal. Ensure parking brake is engaged, traction pedal is in NEUTRAL, throttle is in SLOW position and the ENABLE/DISABLE switch is in the DISABLE position.
2. Turn ignition switch to ON/Preheat position. An automatic timer will control preheat for approximately 6 seconds. After preheat, turn key to START position. Crank the engine for **no longer than** 15 seconds. Release key when engine starts. If additional preheat is required, turn key to OFF position then to ON/preheat position. Repeat process as required.
3. Run engine at idle speed or partial throttle until engine warms up.
4. To stop, move all controls to NEUTRAL and set parking brake. Return throttle to the idle position, turn key to OFF and remove it from switch.

Important Allow engine to idle for 5 minutes before shutting it off after a full load operation. Failure to do so may lead to turbo–charger trouble.

Note: We recommend that anytime the machine is parked (short or long term) the cutting units should be lowered to the ground. This relieves pressure from the lift circuit and eliminates the risk of the cutting units accidentally lowering to the ground.

Bleeding the Fuel System

1. Park the machine on a level surface. Make sure fuel tank is at least half full.
2. Unlatch and raise hood.

Danger

Under certain conditions, diesel fuel and fuel vapors are highly flammable and explosive. A fire or explosion from fuel can burn you and others and can cause property damage.

- **Use a funnel and fill the fuel tank outdoors, in an open area, when the engine is off and is cold. Wipe up any fuel that spills.**
- **Do not fill the fuel tank completely full. Add fuel to the fuel tank until the level is 1 in. (25 mm) below the bottom of the filler neck. This empty space in the tank allows the fuel to expand.**
- **Never smoke when handling fuel, and stay away from an open flame or where fuel fumes may be ignited by a spark.**
- **Store fuel in a clean, safety-approved container and keep the cap in place.**

3. Open vent plug on the fuel filter/water separator (Fig. 27).

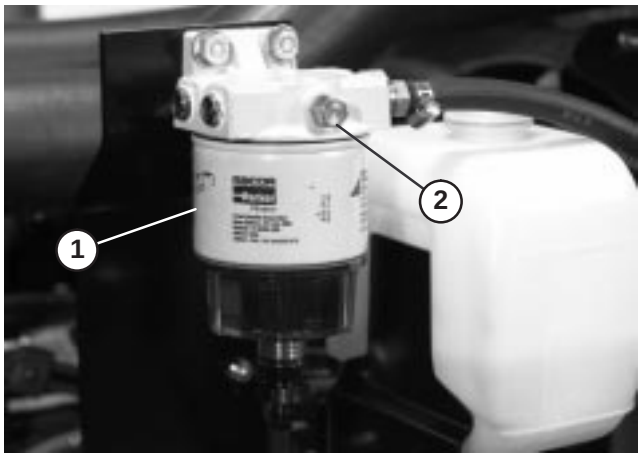

Figure 27

1. Fuel filter/water separator
2. Vent plug

4. Turn key in ignition switch to the ON position. Electric fuel pump will begin operation, thereby forcing air out around vent plug. Leave key in ON position until a solid stream of fuel flows out around plug. Tighten plug and turn key to OFF.
5. Open the air bleed screw on the fuel injection pump (Fig. 28).

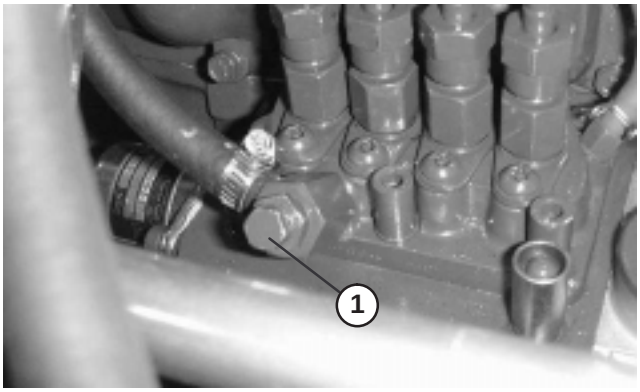

Figure 28

1. Fuel injection pump bleed screw

6. Turn key in ignition switch to the ON position. Electric fuel pump will begin operation, thereby forcing air out around air bleed screw. Leave key in ON position until a solid stream of fuel flows out around screw. Tighten screw and turn key to OFF.

Note: Normally, engine should start after above bleeding procedures are followed. However, if engine does not start, air may be trapped between injection pump and injectors; refer to Bleeding Air From Injectors.

Red Diagnostic Light

The red diagnostic light (Fig. 29), located on steering tower, is used to convey several different messages. While starting the machine, the light will illuminate when the glow plugs are on.

If the light blinks during operation, it may indicate any of the following:

- The machine is being operated faster than the maximum speed value initially programmed into the ECU.
- An electrical malfunction has been detected (open or shorted output.
- A hydraulic leak has been detected (Only if Turfdefender leak detector is installed on machine)
- A communications error has been detected (Only if Turfdefender leak detector is installed on machine)



Figure 29

1. Reel control light

Pushing or Towing the Machine

In an emergency, the machine can be moved by actuating the bypass valve in the variable displacement hydraulic pump and pushing or towing the machine.

Important Do not push or tow the machine faster than 2–3 MPH (3–4.8 km/h) because internal transmission damage may occur. The bypass valve must be open whenever the machine is pushed or towed.

1. The bypass valve is located on top of variable displacement pump (Fig. 30). Rotate the valve 90°, in either direction, to open and allow oil to bypass internally. Because fluid is bypassed, the machine can be moved slowly without damaging the transmission.

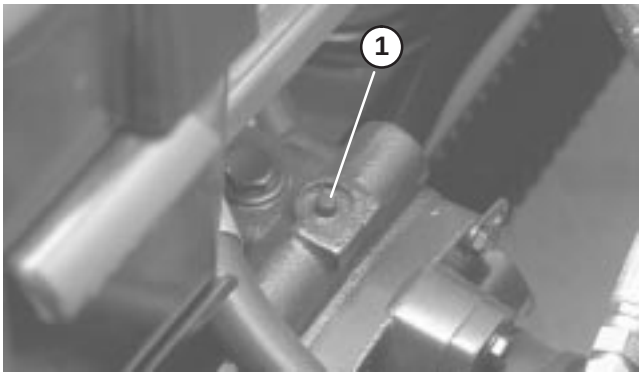

Figure 30

1. Bypass valve

2. Close the bypass valve before starting the engine. However, do not exceed 5–8 ft.-lb. (7–11 N·m) torque to close the valve.

Important Running the engine with the bypass valve open will cause the transmission to overheat.

Green Diagnostic Light

The machine is equipped with a diagnostic light which indicates if the electronic controller is functioning correctly. The green diagnostic light (Fig. 31) is located under the control panel, next to the fuse block. When the electronic controller is functioning correctly and the key switch is moved to the ON position, the controller diagnostic light will be illuminated. The light will blink if the controller detects a malfunction in the electrical system. The light will stop blinking and automatically reset when the key switch is turned to the OFF position.

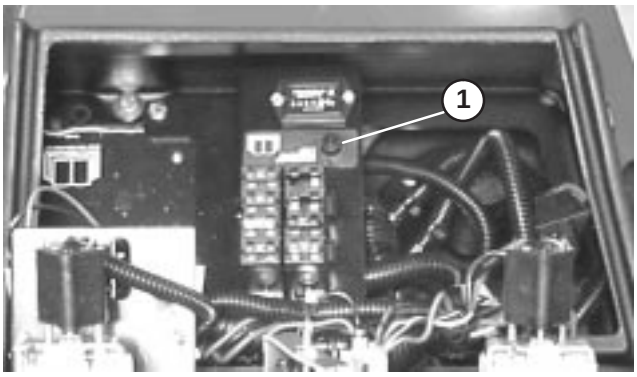

Figure 31

1. Green diagnostic light

When the controller diagnostic light blinks, one of the following problems has been detected by the controller:

- One of the outputs has been shorted.
- One of the outputs is open circuited.

Using the diagnostic display, determine which output is malfunctioning, refer to Checking Interlock Switches.

If the diagnostic light is not illuminated when the key switch is in the ON position, this indicates that the electronic controller is not operating. Possible causes are:

- Loopback is not connected.
- The light is burned out.
- Fuses are blown.
- No battery power.

Check electrical connections, input fuses and diagnostic light bulb to determine malfunction. Make sure loopback connector is secured to wire harness connector.

Diagnostic ACE Display (Optional)

The machine is equipped with an electronic controller which controls most machine functions. The controller determines what function is required for various input switches (i.e. seat switch, key switch, etc.) and turns on the outputs to actuate solenoids or relays for the requested machine function.

For the electronic controller to control the machine as desired, each of the input switches, output solenoids and relays must be connected and functioning properly.

The Diagnostic ACE display is a tool to help the user verify correct electrical functions of the machine.

Checking the Interlock Switches

Caution

If safety interlock switches are disconnected or damaged the machine could operate unexpectedly causing personal injury.

- **Do not tamper with the interlock switches.**
- **Check the operation of the interlock switches daily and replace any damaged switches before operating the machine.**
- **Replace switches every two years regardless of whether they are operating properly or not.**

The purpose of the interlock switches are to prevent the engine from cranking or starting unless the traction pedal is in NEUTRAL, the Enable/Disable switch is in DISABLE and the Lower Mow/Raise control is in the neutral position. In addition, the engine will stop when the traction pedal is depressed with either the operator off the seat or the parking brake engaged.

To verify interlock switch function:

1. Park machine on a level surface, lower the cutting units, stop the engine and engage the parking brake.
2. Open control panel cover. Locate wire harness and loopback connector. Carefully unplug loopback connector from harness connector (Fig. 32).

3. Connect the Diagnostic ACE display connector to the harness connector (Fig. 33). Make sure correct overlay decal is positioned on Diagnostic ACE display.

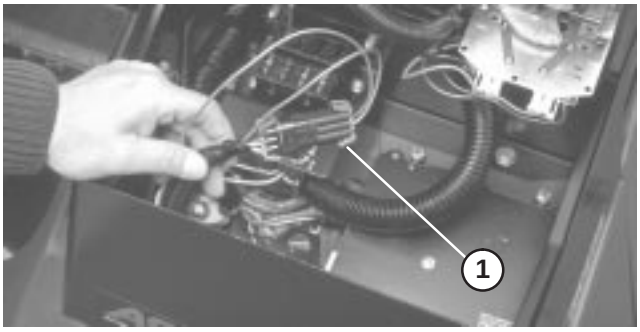

Figure 32

1. Loop–back connector

4. Turn the key switch to the ON position, but do not start machine.

Note: The red text on the overlay decal refers to input switches and the green text refers to outputs.

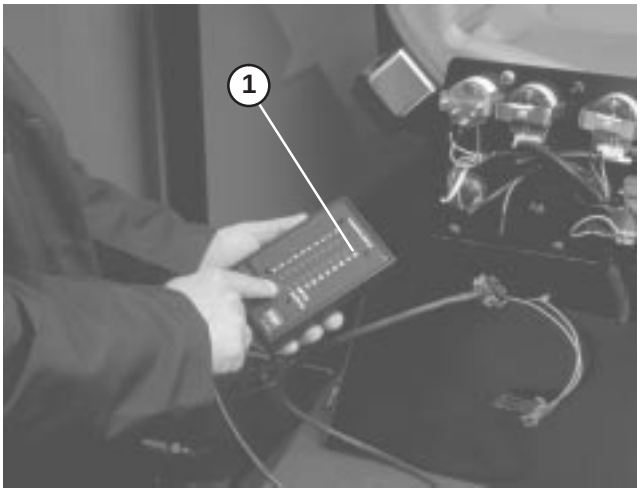

Figure 33

1. Diagnostic ACE

5. The "inputs displayed" LED, on lower right column of the Diagnostic ACE, should be illuminated. If "outputs displayed" LED is illuminated, press and release the toggle button, on Diagnostic ACE, to change LED to "inputs displayed". Do not hold button down.

6. The Diagnostic ACE will illuminate the LED associated with each of the inputs when that input switch is closed.

   Individually, change each of the switches from open to closed (i.e., sit on seat, engage traction pedal, etc.), and note that the appropriate LED on Diagnostic ACE will blink on and off when corresponding switch is closed. Repeat on each switch that is possible to be changed by hand.

7. If switch is closed and appropriate LED does not turn on, check all wiring and connections to switch and/or check switches with an ohm meter. Replace any damaged switches and repair any damaged wiring.

The Diagnostic ACE also has the ability to detect which output solenoids or relays are turned on. This is a quick way to determine if a machine malfunction is electrical or hydraulic.

To verify output function:

1. Park machine on a level surface, lower the cutting units, stop the engine and engage the parking brake.

2. Open control panel cover. Locate wire harness and connectors near controller. Carefully unplug loopback connector from harness connector.

3. Connect the Diagnostic ACE connector to the harness connector. Make sure correct overlay decal is positioned on Diagnostic ACE.

4. Turn the key switch to the ON position, but do not start machine.

Note: The red text on the overlay decal refers to input switches and the green text refers to outputs.

5. The "outputs displayed" LED, on lower right column of Diagnostic ACE, should be illuminated. If "inputs displayed" LED is illuminated, press the toggle button, on Diagnostic ACE, to change LED to "outputs displayed."

Note: It may be necessary to toggle between "inputs displayed" and "outputs displayed" several times to do the following step. To toggle back and forth, press toggle button once. This may be done as often as required. Do **not** hold the button.

6. Sit on the seat and attempt to operate the desired function of the machine. The appropriate output LED's should illuminate to indicate that the ECU is turning on that function. (Refer to the list on page 23 to be certain of the specified output LEDs.

Note: If any output LED is blinking, this indicates an electrical problem with that OUTPUT. Repair / replace defective electrical parts immediately. To reset a blinking LED, turn the key switch "OFF", then back "ON" and clear the controllers fault memory (Refer to Clearing the Fault Memory).

If no output LEDs are blinking, but the correct output LED's do not illuminate, verify that the required input switches are in the necessary positions to allow that function to occur. Verify correct switch function.

If the output LEDs are on as specified, but the machine does not function properly, this indicates a non-electrical problem. Repair as necessary.

Note: Due to electrical system constraints, the output LED's for "START", "PREHEAT" and "ETR/ALT" may not blink even though an electrical problem may exist for those functions. If the machine problem appears to be with one of these functions, be certain to check the electrical circuit with a volt/ohm meter to verify that no electrical problem exists to these functions.

If each input switch is in the correct position and functioning correctly, but the output LEDs are not correctly illuminated, this indicates an ECU problem. If this occurs, contact your Toro Distributor for assistance.

Fault Memory and Retrieval

If the Controller senses a **fault** on one of the **output solenoids**, it will flash the machines diagnostic Lamp (Reel Diagnostic lamp on console or green Diagnostic lamp under console) and store the fault into the Controllers (ECU) memory. The fault can then be retrieved and viewed with the Diagnostic ACE hand held tool or a lap top/PC at anytime. The Controller will store one (1) fault at a time and will not store another different fault until the first fault is cleared.

Retrieving Fault Information

Retrieving Stored Faults (Do not sit in seat)

1. Rotate ignition key to **Off** position.
2. Connect the Hand held Diagnostic Tool to the desired Controller Loopback Connector (use the proper overlay).
3. Move the Joystick to the **Raise** position and hold.
4. Rotate ignition key to **On** position, and continue to hold the Joystick in **Raise** position until the top left Diagnostic Tool light comes on (approx. 2 seconds).
5. Release the Joystick to the center position.
6. Hand held Tool will now playback the fault retained in the Controller memory.

Important The display will show eight (8) individual records with the fault displayed on the 8th record. Each record will be displayed for 10 seconds. **Be sure to have the Diagnostic Tool display on Outputs** to see fault. The Problem circuit will be flashing. Records will repeat until key is turned off. Unit **will not start** in this mode.

Clearing the Fault Memory (Diagnostic Tool not required)

1. Rotate ignition key to **Off** position.
2. Turn Backlap Switch to the **Front** or **Rear** Backlap position.
3. Turn the Reel Control Switch to **Enable** position.
4. Move the Joystick to the **Raise** position and hold.
5. Turn the ignition key to **On**, and continue to hold the Joystick in the **Raise** position until the Reel Control Lamp starts to flash (approx. 2 seconds).
6. Release the Joystick and turn the Key **Off**. **Memory is now cleared.**
7. Turn the Backlap Switch to **Off** and Enable Switch to **Disable** position.

Important The Diagnostic ACE display must not be left connected to the machine. It is not designed to withstand the environment of the machine's every day use. When done using Diagnostic ACE, disconnect it from the machine and reconnect loopback connector to harness connector. Machine will not operate without loopback connector installed on harness. Store Diagnostic ACE in dry, secure location in shop, not on machine.

Hydraulic Solenoid Valve Functions

Use the list below to identify and describe the different functions of the solenoids in the hydraulic manifold. Each solenoid must be energized to allow function to occur.

Solenoid	Function
MSV1	Front reel circuit
MSV2	Rear reel circuit
SV4	Lift front wing cutting units
SV3	Lift front center cutting unit
SV5	Lift rear cutting units
SV1	Pressurize raise/lower hydraulic circuit
SV2	Direction: ON=Raise, OFF= Lower
SV8	Load Holding

Operating Characteristics

Familiarization

Before mowing grass, practice operating machine in an open area. Start and stop the engine. Operate in forward and reverse. Lower and raise cutting units and engage and disengage reels. When you feel familiar with the machine, practice operating up and down slopes at different speeds.

The brakes can be used to assist in turning the machine. However, use them carefully, especially on soft or wet grass conditions because the turf may be torn accidentally.

Individual turning brakes may also be used to help maintain traction. For example, in some slope conditions, the uphill wheel slips and loses traction. If this situation occurs, depress uphill turn pedal gradually and intermittently until the uphill wheel stops slipping, thus, increasing traction on the downhill wheel.

Important Before mowing grass, practice operating the machine in turns. Turf damage in turns may occur especially under soft or wet grass conditions if the turn is completed at a high speed or at a small turning radius. Maintain a speed below 3 MPH during a turn and a turning radius greater than 8 feet to minimize turf damage from tires or cutting units. Mounting the cutting units with the steering pin in the front mounting hole (see page 10) will allow the cutting unit to steer itself as the traction unit turns providing optimum maneuverability and cutting performance in turns. During cross-cutting of fairways, a “tear drop” shape turn is recommended to increase cutting productivity and minimize turf damage.

Danger

When operating the machine, always use the seat belt and ROPS together. Do not use a seat belt without a ROPS.

Warning System

If a warning light comes on during operation, stop the machine immediately and correct the problem before continuing operation. Serious damage could occur if the machine is operated with a malfunction.

Important The Red Diagnostic Light , on the steering tower, indicates when the glow plugs are ON. The machine should **not** be started until the glow plug cycle is complete.

Mowing

Start engine and move throttle to FAST so engine is running at maximum speed. Move the ENABLE/DISABLE switch to ENABLE and use the LOWER MOW/RAISE lever to control the cutting units (front cutting units are timed to lower before the rear cutting units). To move forward and cut grass, press traction pedal forward. Maintain a speed which does not result in the Reel Control LIght being illuminated. Gradually increase or decrease traction speed to ensure proper clip is maintained.

Transport

Move the ENABLE/DISABLE switch to Joy Stick DISABLE (mid position), lock brake pedals together and raise the cutting units to the transport position. Be careful when driving between objects so you do not accidentally damage the machine or cutting units. Use extra care when operating machine on slopes. Drive slowly and avoid sharp turns on slopes to prevent roll overs. The cutting units should be lowered when going downhill for steering control.

Maintenance

Note: Determine the left and right sides of the machine from the normal operating position.

Recommended Maintenance Schedule

Maintenance Service Interval	Maintenance Procedure
After first 10 hours	• Check the fan and alternator belt tension. • Torque the wheel lug nuts.
After first 50 hours	• Change the engine oil and filter. • Check the engine RPM (idle and full throttle).
After first 200 hours	• Change the planetary gear oil • Change the 4 WD rear axle lubricant.
Every 50 hours	• Lubricate all grease fittings. • Check the air cleaner.[1] • Check the battery fluid level and cable connections.
Every 100 hours	• Change the engine oil and filter. • Inspect the cooling system hoses. • Check the fan and alternator belt tension.
Every 200 hours	• Drain moisture from hydraulic tank. • Drain moisture from fuel tank. • Torque the wheel lug nuts.
Every 400 hours	• Service the air cleaner.[1] • Replace the fuel/water separator filter. • Replace the fuel filter. • Inspect traction linkage movement • Check the engine RPM (idle and full throttle). • Check the planetary gear oil • Check the 4 WD rear axle lubricant.
Every 800 hours	• Change the hydraulic filter. • Change the hydraulic fluid • Check rear wheel toe-in. • Pack the 2WD rear wheel bearings. • Change the planetary gear oil • Change the 4 WD rear axle lubricant. • Adjust valves
Every 1600 hours or every 2 years, whichever occurs first	• Replace all moving hoses. • Replace interlock safety switches. • Flush/replace the cooling system fluid. • Drain/flush fuel tank. • Drain/flush hydraulic tank.

[1]Service air cleaner whenever indicator shows red

Important Refer to your engine operator's manual for additional maintenance procedures.

Caution

If you leave the key in the ignition switch, someone could accidently start the engine and seriously injure you or other bystanders.

Remove the key from the ignition and disconnect the wire from the spark plug before you do any maintenance. Set the wire aside so that it does not accidentally contact the spark plug.

Daily Maintenance Checklist

Duplicate this page for routine use.

	For the week of:						
Maintenance Check Item	Mon.	Tues.	Wed.	Thurs.	Fri.	Sat.	Sun.
Check safety interlock operation.							
Check brake operation.							
Check engine oil and fuel level.							
Check cooling system fluid level.							
Drain the water/fuel separator.							
Check the air filter restriction indicator.							
Check the radiator and screen for debris.							
Check unusual engine noises.[1]							
Check unusual operating noises.							
Check the transmission oil level.							
Check the hydraulic system oil level.							
Check the hydraulic filter indicator.[2]							
Check the hydraulic hoses for damage.							
Check for fluid leaks.							
Check the tire pressure.							
Check instrument operation.							
Check the reel-to-bedknife adjustment.							
Check the height-of-cut adjustment.							
Lubricate all grease fittings.[3]							
Touch up damaged paint.							

[1]Check the glow plug and injector nozzles, if hard starting, excess smoke, or rough running is noted.

[2]Check with the engine running and oil at operating temperature

[3]Immediately after **every** washing, regardless of the interval listed.

Lubrication

The machine has grease fittings that must be lubricated regularly with No. 2 General Purpose Lithium Base Grease. If machine is operated under normal conditions, lubricate all bearings and bushings after every 50 hours of operation or immediately after every washing.

The grease fitting locations and quantities are:

- Cutting unit carrier frame and pivot (2 ea.) (Fig. 34)
- Rear axle tie rod (2)(Fig. 35)
- Steering cylinder ball joints (2) (Fig. 35)
- King pin bushings (2) (Fig. 35). **The top fitting on the king pin should only be lubricated annually (2 pumps).**
- Front lift cylinders (3) (Fig. 36 and 41)
- Rear lift cylinder pivot (2) (Fig. 37)
- Lift arm pivot (3) (Fig. 38)
- Rear axle pivot (Fig. 40)
- Rear lift arm pivots (2) (Fig. 39)
- Brake pedal shaft (1) (Fig. 42).

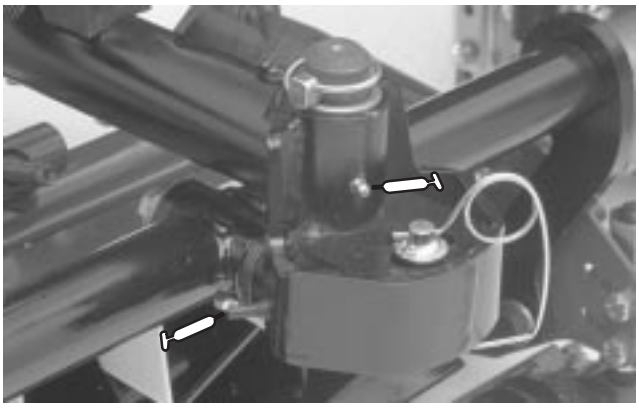

Figure 34



Figure 35

1. Top fitting on king pin



Figure 36



Figure 37

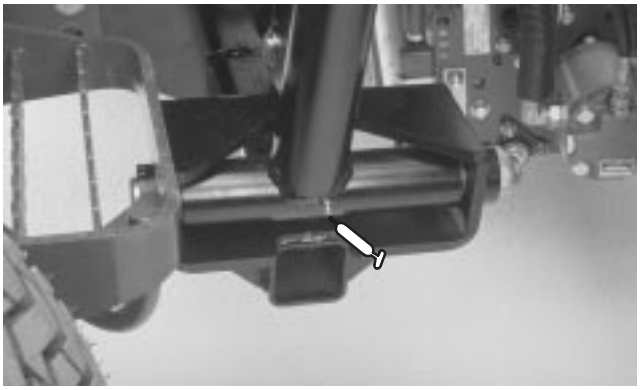

Figure 38

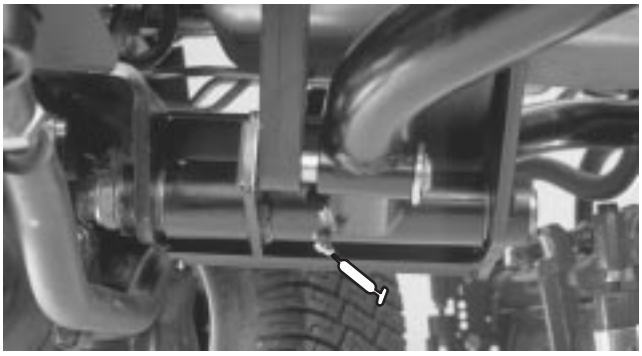

Figure 39

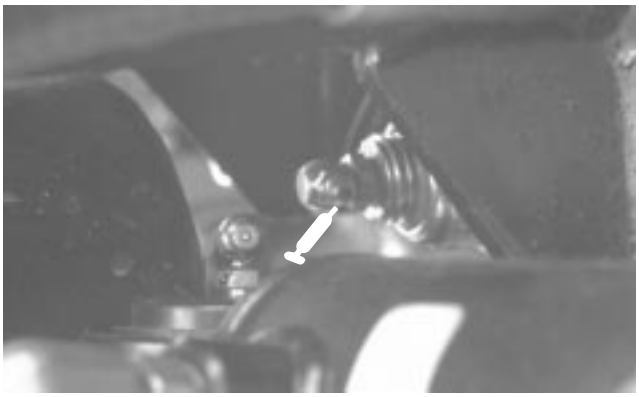

Figure 40



Figure 41

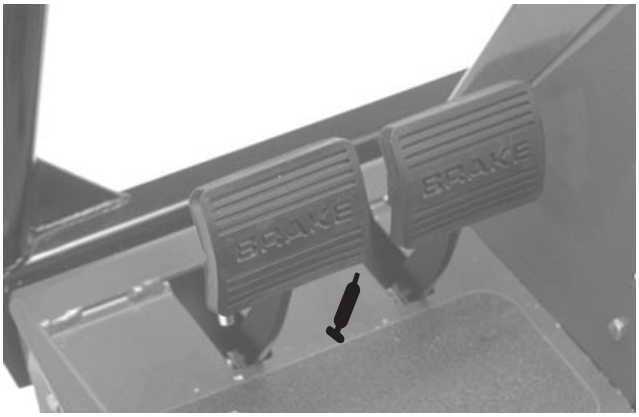

Figure 42

Service Interval Chart

REELMASTERS
6500-D / 6700-D
QUICK REFERENCE AID

CHECK/SERVICE (daily)

1. OIL LEVEL, ENGINE
2. OIL LEVEL, HYDRAULIC TANK
3. COOLANT LEVEL, RADIATOR
4. FUEL /WATER SEPARATOR
5. AIR FILTER SERVICE INDICATOR
6. RADIATOR SCREEN
7. BRAKE FUNCTION
8. TIRE PRESSURE (15-20 PSI)

CHECK/SERVICE SEE OPERATOR'S MANUAL

9. BATTERY
10. BELTS (FAN, ALT.)
11. PLANETARY GEAR DRIVE
12. REAR AXLE OIL FILL**
13. REAR AXLE OIL CHECK (2)**

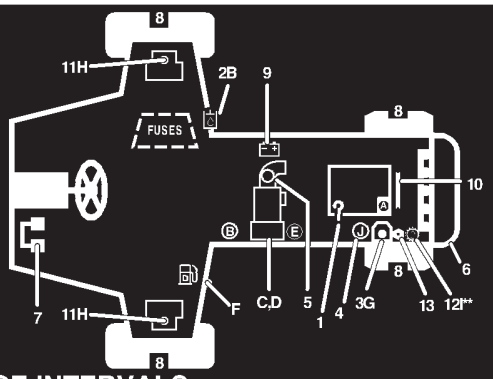

FLUID SPECIFICATIONS/CHANGE INTERVALS

SEE OPERATOR'S MANUAL FOR INITIAL CHANGES.	FLUID TYPE	CAPACITY	CHANGE INTERVAL		FILTER PART NO.
			FLUID	FILTER	
A. ENGINE OIL	SAE 10W-30CD	7.5 QTS.	100 HRS.	100 HRS.	99-8384
B. HYD. CIRCUIT OIL	MOBIL DTE15M	9 GALS.*	800 HRS.	SEE SERVICE INDICATOR	94-2621
C. PRIMARY AIR FILTER	----	----	----	SEE SERVICE INDICATOR	93-9162
D. SAFETY AIR FILTER	----	----	----	SEE OPERATOR'S MANUAL	93-9163
E. FILTER, IN-LINE FUEL	----	----	----	400 HRS.	99-8358
F. FUEL TANK	NO. 2-Diesel	15 GALS.	Drain and flush, 2 yrs.		
G. COOLANT	50/50 ETHELENE GLYCOL / WATER	2.5 GALS.	Drain and flush, 2 yrs.		----
H. PLANETARY GEAR DRIVE	SAE85W-140	16 OZ.	800 HRS.	----	----
I. REAR AXLE OIL**	SAE85W-140	80 OZ.	800 HRS.	----	
J. WATER SEPARATOR				400 HRS	98-9764

* INCLUDES FILTER, CHECK DIP STICK, DO NOT OVER FILL. **4WD ONLY

105-0134

Servicing the Air Cleaner

Check air cleaner body for damage which could possibly cause an air leak. Replace a damaged air cleaner body.

Service the air cleaner filters whenever air cleaner indicator (Fig. 43) shows red or every 400 hours (more frequently in extreme dusty or dirty conditions). Do not over-service the air filter.

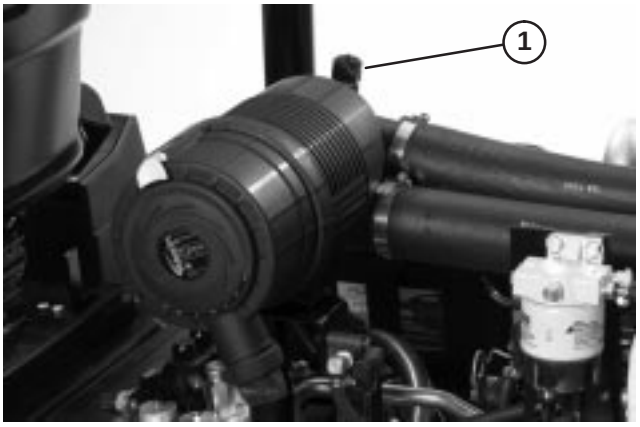

Figure 43

1. Air cleaner indicator

Be sure that the cover is sealing around air cleaner body.

Cleaning the Filter

1. Release latch securing air cleaner cover to air cleaner body (Fig. 44). Separate cover from body. Clean inside of air cleaner cover.

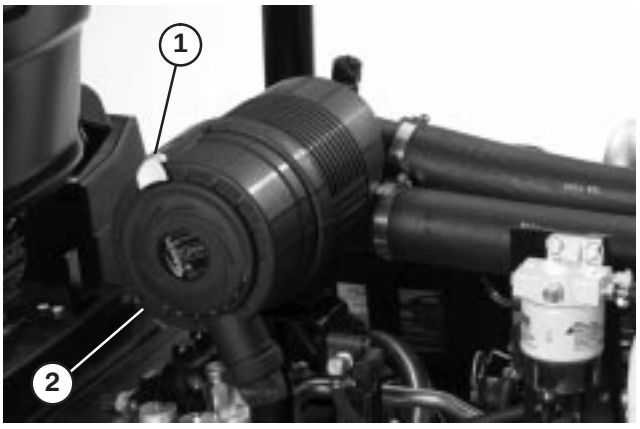

Figure 44

1. Air cleaner latch
2. Dust cap

2. Gently slide primary filter (Fig. 45) out of air cleaner body to reduce the amount of dust dislodged. Avoid knocking filter against air cleaner body. **Do not remove safety filter (Fig. 46).**

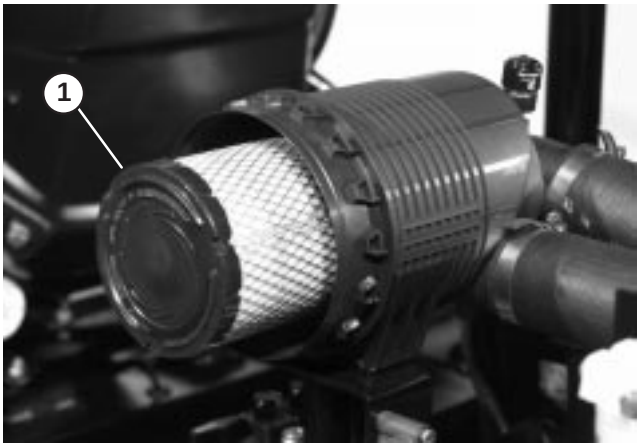

Figure 45

1. Air cleaner primary filter

3. Inspect primary filter and discard if damaged. Do not wash or reuse a damaged filter.

Important Never attempt to clean a safety filter. Replace the safety filter with a new one after every three primary filter services.

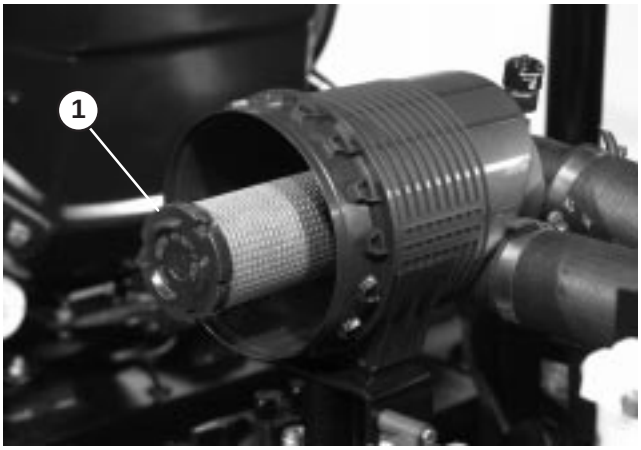

Figure 46

1. Air cleaner safety filter

4. Compressed Air Method:

A. Blow compressed air from inside to the outside of dry filter element. Do not exceed 100 psi to prevent damage to the element.

B. Keep air hose nozzle at least 2 in. from filter and move nozzle up and down while rotating the filter element. Inspect for holes and tears by looking through the filter toward a bright light.

5. Inspect new filter for shipping damage. Check sealing end of filter. Do not install a damaged filter.

6. Insert new filter properly into air cleaner body. Make sure filter is sealed properly by applying pressure to outer rim of filter when installing. Do not press on flexible center of filter.
7. Reinstall cover and secure latches. Make sure cover is positioned with TOP side up.
8. Reset indicator (Fig. 43) if showing red.

Servicing the Engine Oil and Filter

Change oil and filter initially after the first 50 hours of operation, thereafter change oil and filter every 100 hours.

1. Remove drain plug (Fig. 47) and let oil flow into drain pan. When oil stops, install drain plug.

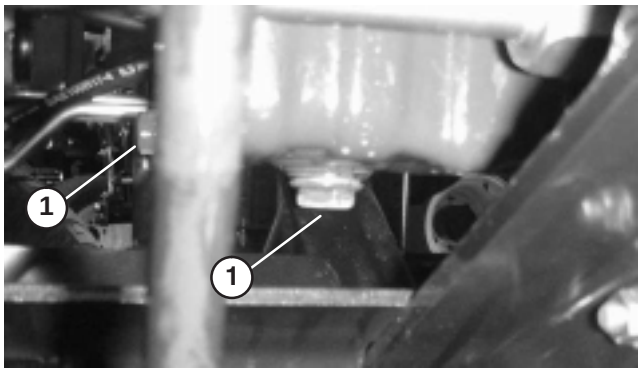

Figure 47

1. Drain plugs

2. Remove oil filter (Fig. 48). Apply a light coat of clean oil to the new filter seal before screwing it on. **Do not over-tighten.**

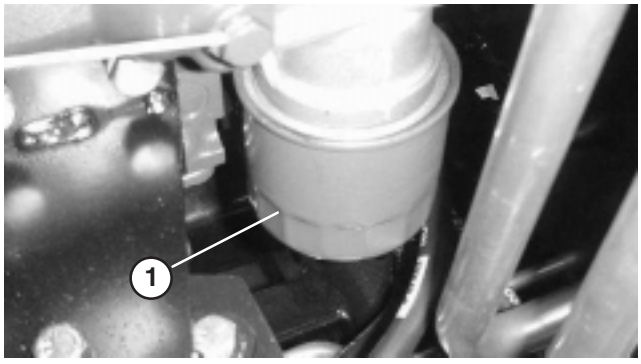

Figure 48

1. Oil filter

3. Add 10W-30 CD, CE, CF, CF-4, or CG-4 oil to crankcase. Capacity is 7.5 qt. (7 L) with filter.

Fuel System

Fuel Tank

Drain and clean fuel tank every 2 years. Also, drain and clean tank if fuel system becomes contaminated or if machine is to be stored for an extended period. Use clean fuel to flush out the tank.

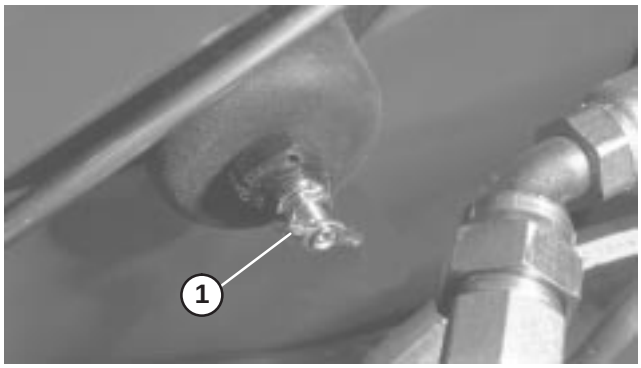

Figure 49

1. Fuel tank drain

Danger

Under certain conditions, diesel fuel and fuel vapors are highly flammable and explosive. A fire or explosion from fuel can burn you and others and can cause property damage.

- **Use a funnel and fill the fuel tank outdoors, in an open area, when the engine is off and is cold. Wipe up any fuel that spills.**
- **Do not fill the fuel tank completely full. Add fuel to the fuel tank until the level is 1/4 to 1/2 in. (6 to 13 mm) below the bottom of the filler neck. This empty space in the tank allows the fuel to expand.**
- **Never smoke when handling fuel, and stay away from an open flame or where fuel fumes may be ignited by a spark.**
- **Store fuel in a clean, safety-approved container and keep the cap in place.**

Fuel Lines and Connections

Check lines and connections every 400 hours or yearly, whichever comes first. Inspect for deterioration, damage, or loose connections.

Fuel Filter / Water Separator

Drain water or other contaminants from fuel filter / water separator (Fig. 50) daily.

1. Locate fuel filter, under hood, and place a clean container under it.
2. Loosen drain plug on bottom of filter canister. Tighten plug after draining.

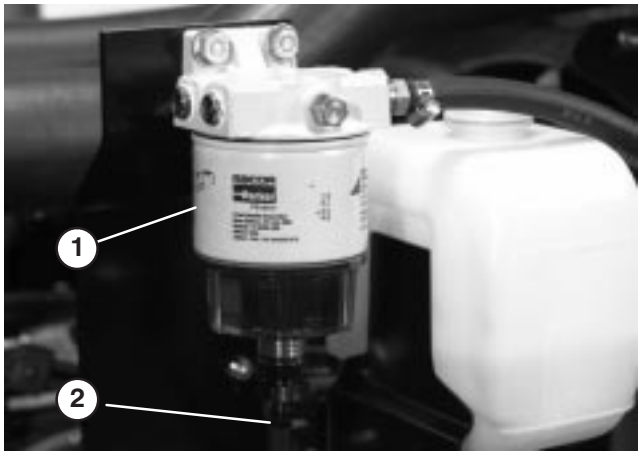

Figure 50

1. Fuel filter/water separator 2. Drain plug

Replace filter canister after every 400 hours of operation.

1. Clean area where filter canister mounts.
2. Remove filter canister and clean mounting surface.
3. Lubricate gasket on filter canister with clean oil.
4. Install filter canister by hand until gasket contacts mounting surface, then rotate an additional 1/2 turn.

Replacing the Fuel Pre-Filter

Replace the fuel pre-filter (Fig. 51), located between fuel the tank and fuel pump, after every 400 operating hours or yearly, whichever occurs first.

1. Clamp both fuel lines that connect to the fuel filter so that fuel cannot drain when the lines are removed.
2. Loosen the hose clamps at both ends of the filter and pull the fuel lines off of the filter.
3. Slide the hose clamps onto the ends of the fuel lines. Push the fuel lines onto the fuel filter and secure them with the hose clamps. Be sure that the arrow on the side of the filter points toward the injection pump.

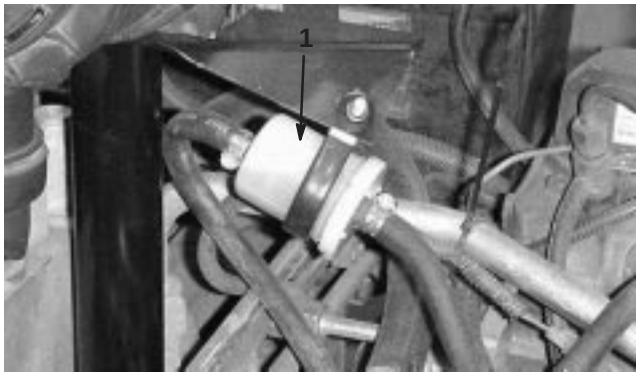

Figure 51

1. Fuel pre-filter

Note: Bleeding fuel system is required after replacing the fuel filter/water separator filter or the fuel filter.

Bleeding Air From Injectors

Note: This procedure should be used only if fuel system has been purged of air through normal priming procedures and engine will not start; refer to Bleeding Fuel System.

1. Loosen the pipe connection to the No. 1 nozzle and holder assembly.

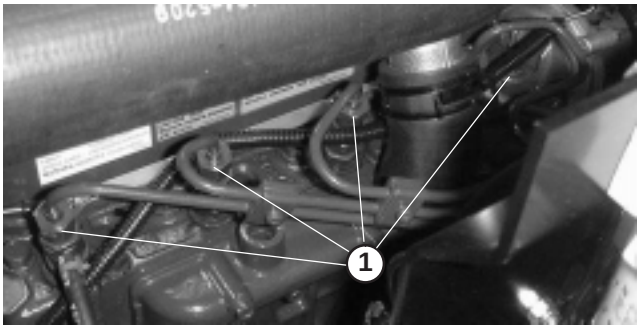

Figure 52

1. Fuel injectors (4)

2. Move throttle to FAST position.
3. Turn key in key switch to RUN position and watch fuel flow around connector. Turn key to OFF position when solid flow is observed.
4. Tighten pipe connector securely.
5. Repeat steps on remaining nozzles.

Engine Cooling System

Removing Debris

Remove debris from rear screen, oil cooler and radiator daily, clean more frequently in dirty conditions.

Important Never spray water onto a hot engine as damage to engine may occur.

1. Turn engine off, release hood latch and raise hood. Clean engine area thoroughly of all debris. Close hood.
2. Unlatch and remove rear screen (Fig. 53). Clean screen thoroughly.



Figure 53

1. Rear screen

3. Unscrew knobs and pivot oil cooler rearward. Clean both sides of oil cooler and radiator area thoroughly with compressed air. **Do not use water.** Open hood and blow debris out toward back of machine. Pivot oil cooler back into position and tighten knobs.

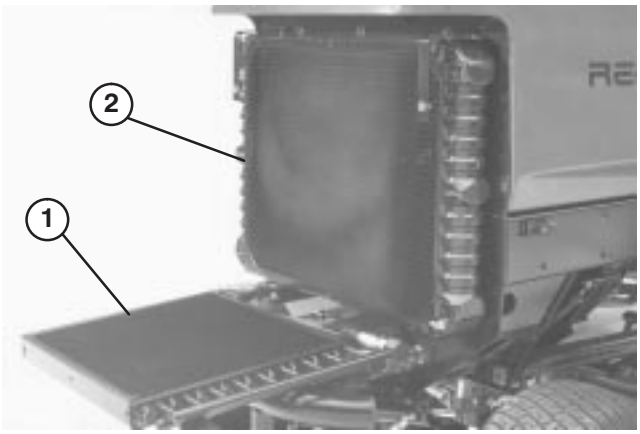

Figure 54

1. Oil cooler
2. Radiator

Note: Fan shroud may be easily unbolted from machine to simplify cleaning.

4. Install rear screen and secure latches.

Note: Do not use water to clean engine, as damage may occur.

Maintaining the Cooling System

Capacity of the system is 10 qts. (9.4 l). Always protect cooling system with a 50/50 solution of water and permanent ethylene glycol anti-freeze. **Do not use water only in the cooling system.**

1. After every 100 operating hours, inspect and tighten hose connections. Replace any deteriorated hoses.
2. After every 2 years, drain and flush the cooling system. Add anti-freeze (refer to Check Cooling System).

Check Engine Belt

Check condition and tension of alternator belt after every 100 hours of operation (Fig. 55). Replace belt as required.

Alternator Belt

To Check Tension:

1. Open hood.
2. Check tension by depressing belt midway between alternator and crankshaft pulleys with 22 lb. of force. Belt should deflect 7/16 in. If deflection is incorrect, proceed to step 3. If correct, continue operation.

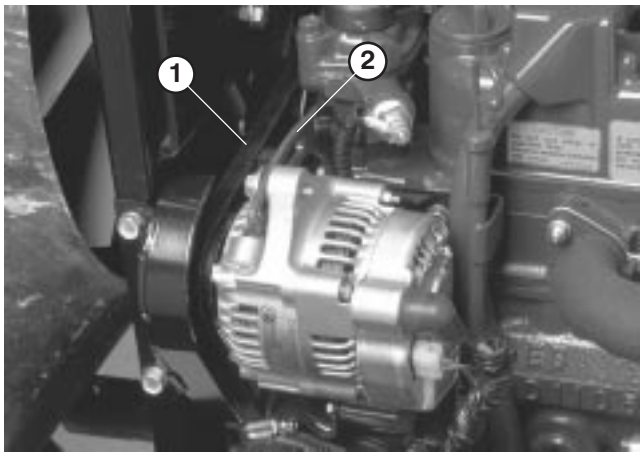

Figure 55

1. Alternator belt
2. Brace

3. Loosen bolt securing brace to engine and bolt securing alternator to brace.

4. Insert pry bar between alternator and engine and pry out on alternator.

5. When proper tension is achieved, tighten alternator and brace bolts to secure adjustment.

6. Tighten lock nut to secure adjustment.

Adjusting Throttle

1. Position throttle lever forward so it stops against seat base slot.

2. Loosen the throttle cable connector on the lever arm at the injection pump.

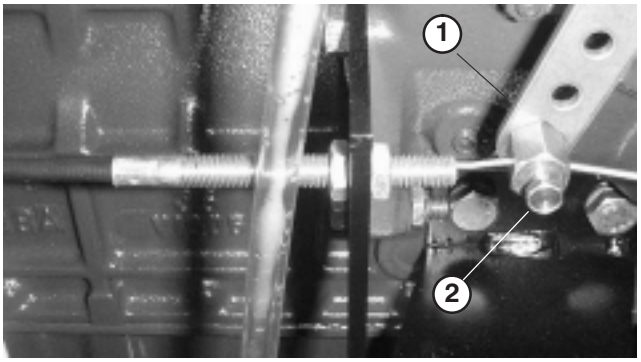

Figure 56

1. Injection pump lever arm 2. Connector

3. Hold the injection pump lever arm against the high idle stop and tighten the cable connector.

Note: When tightened, the cable connector must be free to swivel.

4. Torque the lock nut, used to set the friction device on the throttle lever, to 40–55 in-lb. The maximum force required to operate the throttle lever should be 20 lb.

Changing the Hydraulic Fluid

Change hydraulic fluid after every 800 operating hours, in normal conditions. If fluid becomes contaminated, contact your local Toro distributor because the system must be flushed. Contaminated fluid looks milky or black when compared to clean oil.

1. Turn engine off and raise hood.

2. Remove drain plug from bottom of reservoir (Fig. 57) and let hydraulic fluid flow into drain pan. Install and tighten plug when hydraulic fluid stops draining.

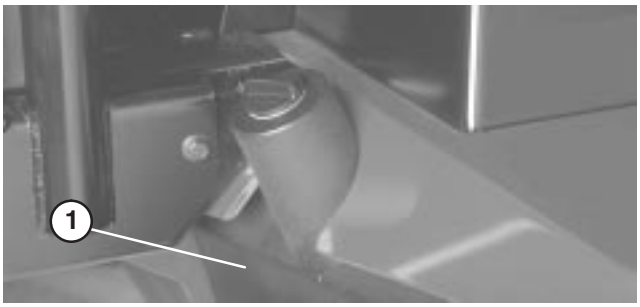

Figure 57

1. Hydraulic reservoir

3. Fill reservoir with approximately 8.5 gallons of hydraulic fluid; refer to Checking the Hydraulic Fluid.

Important Use only hydraulic fluids specified. Other fluids could cause system damage.

4. Install reservoir cap. Start engine and use all hydraulic controls to distribute hydraulic fluid throughout the system. Also check for leaks. Then stop the engine.

5. Check level of fluid and add enough to raise level to FULL mark on dipstick. **Do not overfill.**

Replacing the Hydraulic Filter

The hydraulic system filter head is equipped with a service interval indicator. With the engine running, view the indicator, it should be in the GREEN zone. When the indicator is in the RED zone, the filter element should be changed.

Use the Toro replacement filter (Part No. 94-2621).

Important Use of any other filter may void the warranty on some components.

1. Position machine on a level surface, lower the cutting units, stop the engine, engage the parking brakes and remove key from ignition switch.

2. Clean area around filter mounting area. Place drain pan under filter and remove filter (Fig. 58).

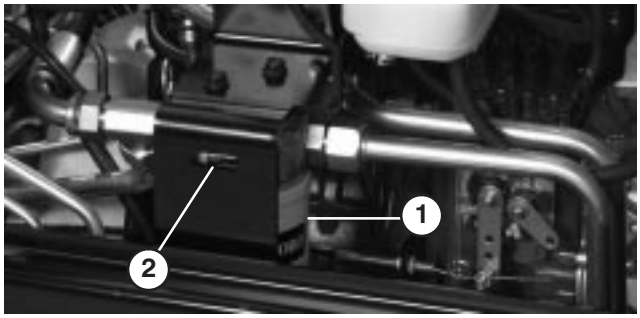

Figure 58

1. Hydraulic filter
2. Service interval indicator

3. Lubricate new filter gasket and fill the filter with hydraulic fluid.

4. Ensure that the filter mounting area is clean. Screw filter on until gasket contacts mounting plate. Then tighten filter 1/2 turn.

5. Start engine and let run for about two minutes to purge air from the system. Stop the engine and check for leaks.

Checking the Hydraulic Lines and Hoses

Inspect hydraulic lines and hoses daily for leaks, kinked lines, loose mounting supports, wear, loose fittings, weather deterioration and chemical deterioration. Make all necessary repairs before operating.

Warning

Hydraulic fluid escaping under pressure can penetrate skin and cause injury.

- **Make sure all hydraulic fluid hoses and lines are in good condition and all hydraulic connections and fittings are tight before applying pressure to the hydraulic system.**
- **Keep your body and hands away from pin hole leaks or nozzles that eject high pressure hydraulic fluid.**
- **Use cardboard or paper to find hydraulic leaks.**
- **Safely relieve all pressure in the hydraulic system before performing any work on the hydraulic system.**
- **Get immediate medical help if fluid is injected into skin.**

Hydraulic System Test Ports

The test ports are used to test pressure in the hydraulic circuits. Contact your local Toro distributor for assistance.

1. Test Port “A” (Fig. 59) is used to assist in trouble shooting the hydraulic circuit for the lift cylinders.

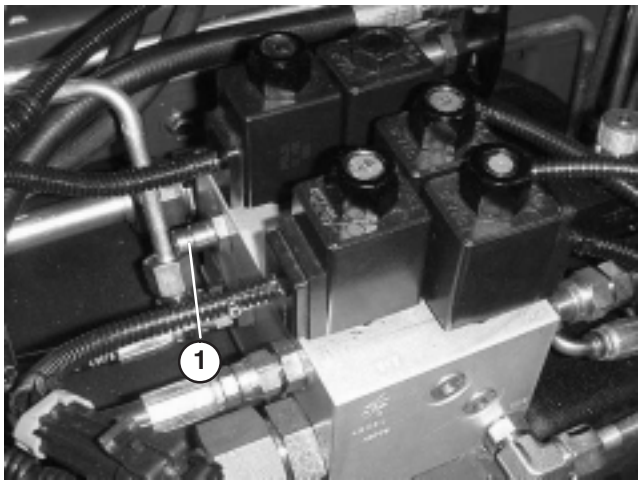

Figure 59

1. Test port “A” (Lift cylinder)

2. Test Port “B” (Fig. 60) is used to assist in trouble shooting the hydraulic circuit for the front cutting units.

3. Test Port “C” (Fig. 60) is used to assist in trouble shooting the hydraulic circuit for the rear cutting units.



Figure 60

1. Test port “B” (Front cutting units)
2. Test port “C” (Rear cutting units)

4. Test Port “D” is located on the bottom of the hydrostatic transmission (Fig. 61) and is used to measure the charge pressure of the transmission.

5. Test Port “E” is used to measure traction forward pressure (Fig. 61).

6. Test Port “F” is used to measure traction reverse pressure (Fig. 61).

7. Test Port “G” is used to measure steering circuit pressure (Fig. 61).

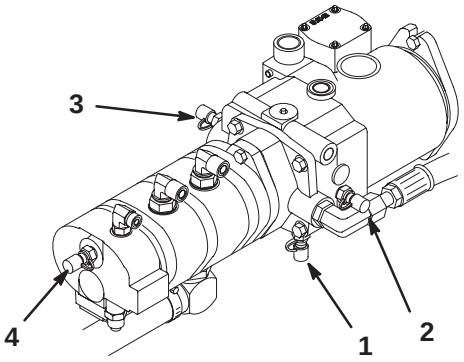

Figure 61

1. Test port “D” (Charge pressure)
2. Test port “E” (Traction forward pressure)
3. Test port “F” (Traction reverse pressure)
4. Test port “G” (Steering circuit pressure)

Adjusting the Traction Drive for Neutral

The machine must not creep when traction pedal is released. If it does creep, an adjustment is required.

1. Park machine on a level surface, shut engine off and lower cutting units to the floor. Depress only the right brake pedal and engage the parking brake.

2. Jack up left side of machine until front tire is off the shop floor. Support machine with jack stands to prevent it from falling accidentally.

Note: On 4 wheel drive models, left rear tire must also be off the shop floor.

3. Start engine and allow run at low idle.

4. Adjust jam nuts on pump rod end to move pump control tube forward to eliminate forward creep or rearward to eliminate rearward creep (Fig. 62).

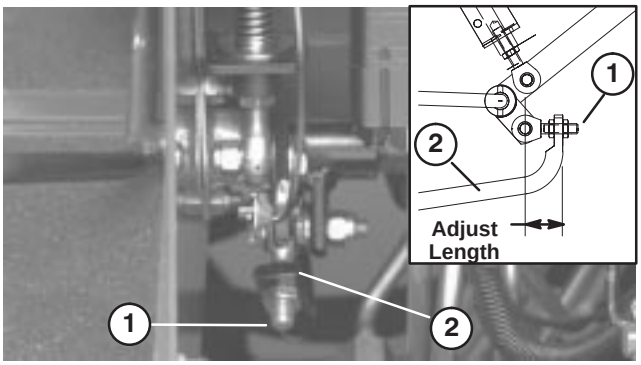

Figure 62

1. Pump rod
2. Pump control tube

5. After wheel rotation ceases, tighten jam nuts to secure adjustment.

6. Stop the engine and release the right brake. Remove jack stands and lower the machine to the shop floor. Test drive the machine to make sure it does not creep.

Hydraulic Schematic—2 Wheel Drive

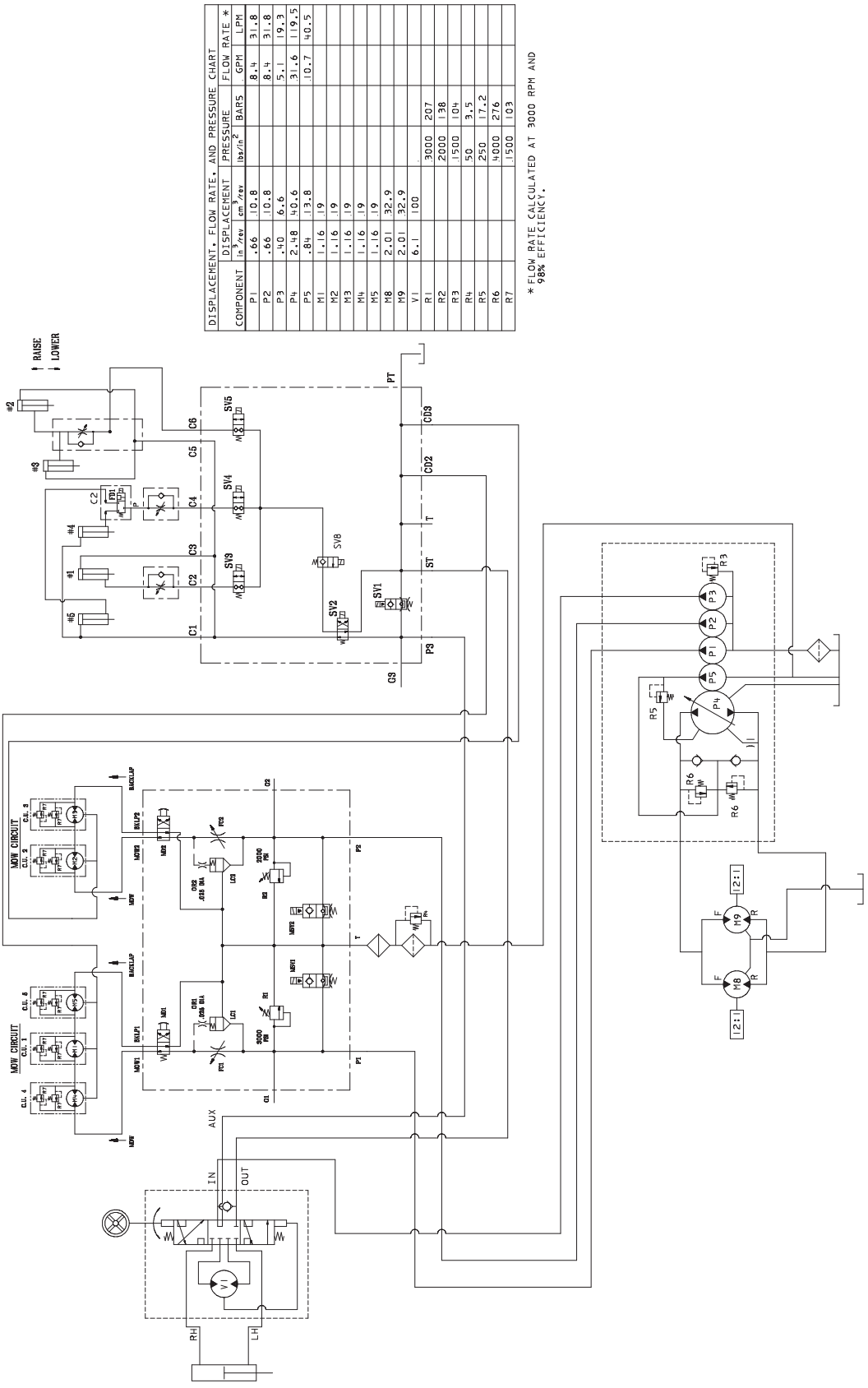

DISPLACEMENT, FLOW RATE, AND PRESSURE CHART

COMPONENT	DISPLACEMENT in³/rev	DISPLACEMENT cm³/rev	PRESSURE lbs/in²	PRESSURE BARS	FLOW RATE * GPM	FLOW RATE * LPM
P1	.66	10.8			8.4	31.8
P2	.66	10.8			8.4	31.8
P3	.40	6.6			5.1	19.3
P4	2.48	40.6			31.6	119.5
P5	.84	13.8			10.7	40.5
M1	1.16	19				
M2	1.16	19				
M3	1.16	19				
M4	1.16	19				
M5	1.16	19				
M8	2.01	32.9				
M9	2.01	32.9				
V1	6.1	100				
R1			3000	207		
R2			2000	138		
R3			1500	104		
R4			50	3.5		
R5			250	17.2		
R6			4000	276		
R7			1500	103		

*FLOW RATE CALCULATED AT 3000 RPM AND 98% EFFICIENCY.

Hydraulic Schematic—4 Wheel Drive

DISPLACEMENT, FLOW RATE, AND PRESSURE CHART						
	DISPLACEMENT		PRESSURE		FLOW RATE *	
COMPONENT	in^3/rev	cm^3/rev	lbs/in^2	BARS	GPM	LPM
P1	.66	10.8			8.4	31.8
P2	.66	10.8			8.4	31.8
P3	.40	6.6			5.1	19.3
P4	2.48	40.6			31.6	119.5
P5	.84	13.8			10.7	40.5
M1	1.16	19				
M2	1.16	19				
M3	1.16	19				
M4	1.16	19				
M5	1.16	19				
M8	2.01	32.9				
M9	2.01	32.9				
M10	2.48	40.6				
V1	6.1	100				
R1			3000	207		
R2			2000	138		
R3			1500	104		
R4			50	3.5		
R5			250	17.2		
R6			4000	276		
R7			1500	103		

* FLOW RATE CALCULATED AT 3000 RPM AND 98% EFFICIENCY.

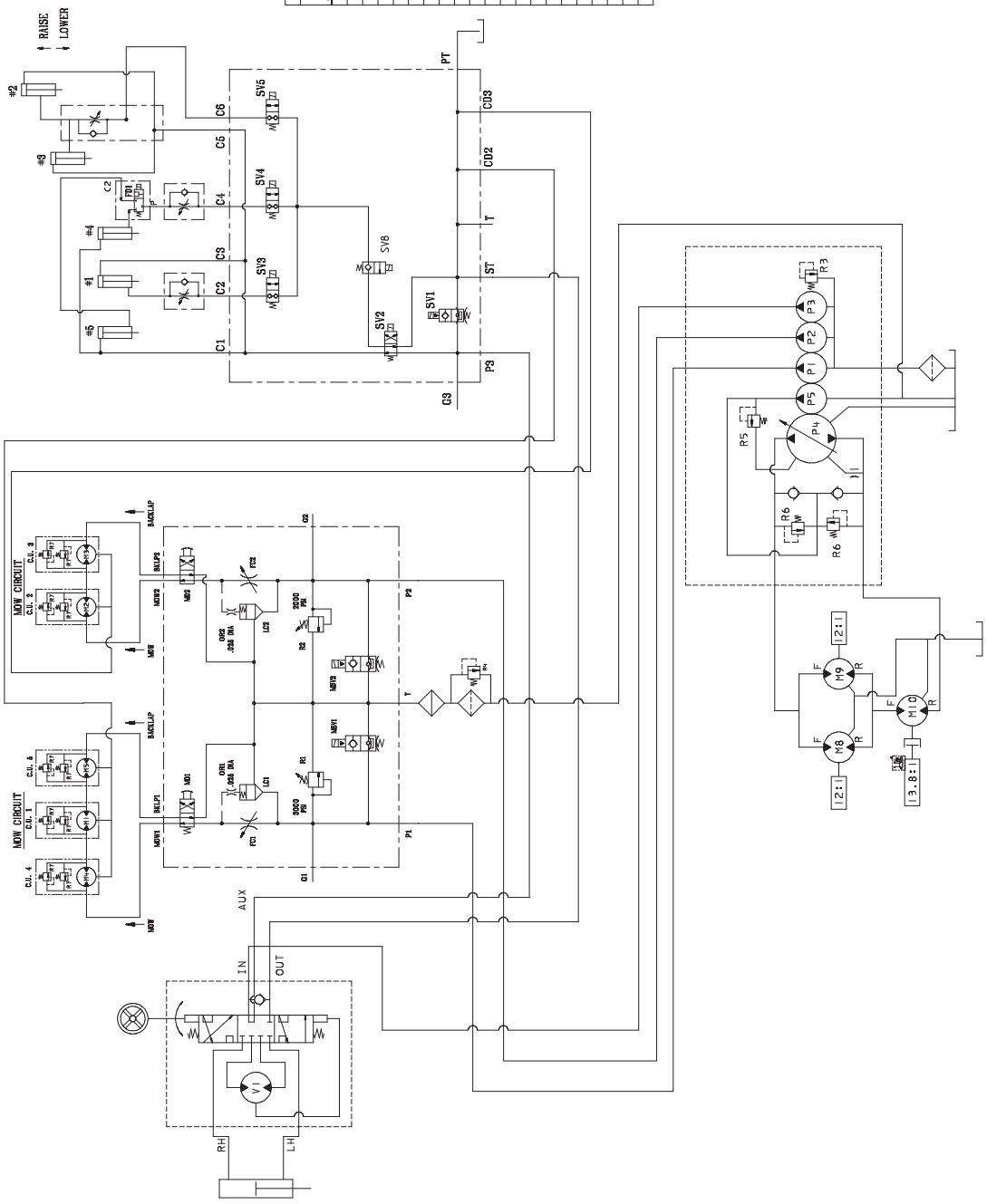

Sheet No.:39

Adjusting the Service Brakes

Adjust the service brakes when there is more than 1 inch of free travel of the brake pedal, or when the brakes do not work effectively. Free travel is the distance the brake pedal moves before braking resistance is felt.

1. Disengage locking pin from brake pedals so both pedals work independently of each other.
2. To reduce free travel of brake pedals, tighten the brakes by loosening the front nut on the threaded end of the brake cable (Fig. 63). Then tighten rear nut to move cable backward until brake pedals have 1/2 to 1 inch of free travel. Tighten front nuts after brakes are adjusted correctly.

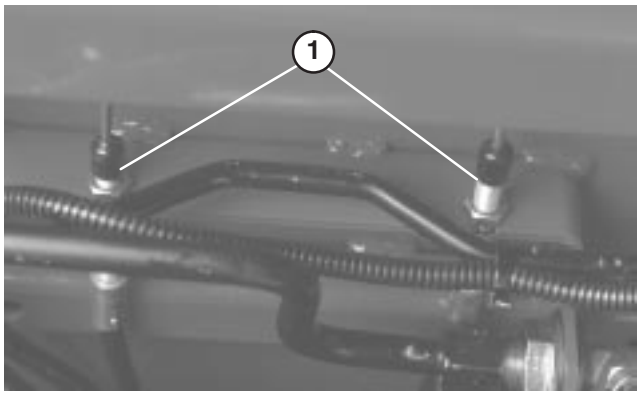

Figure 63

1. Brake cables

Changing the Planetary Gear Drive Oil

Change oil initially after 200 hours operation and every 800 hours, or yearly. Use high quality SAE 85W-140 wt. gear lube as replacement.

1. With machine on level surface, position wheel so the check/drain plug is at lowest position (Fig. 64).
2. Place drain pan under hub, remove plug and allow oil to drain.

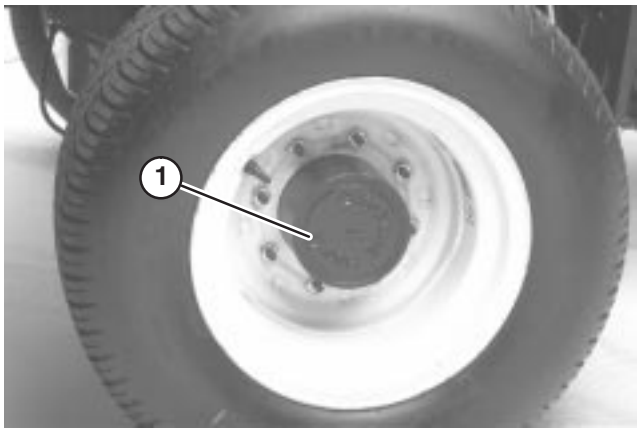

Figure 64

1. Drain/check plug

3. Remove both plugs from the bottom of the brake housing and allow the oil to drain.

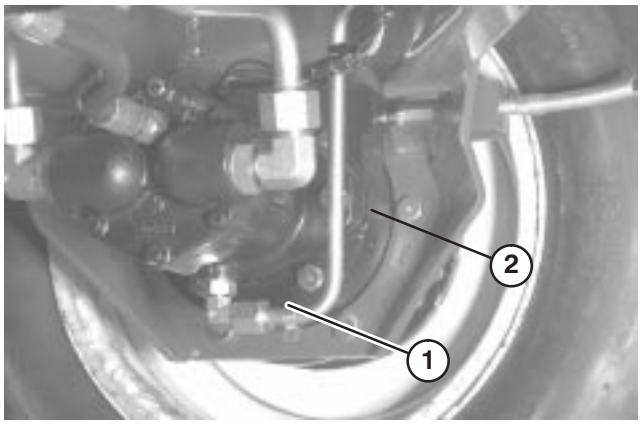

Figure 65

1. Drain plug location
2. Check plug location

4. When all of the oil has drained, install the bottom plug in the brake housing.
5. Position the wheel so that the plug hole is at the ten or two o'clock position on the planetary.
6. Slowly add approximately 16 oz. (0.5 l) of high quality SAE 85W-140 wt. gear lube to the planetary fill hole (at the ten or two o'clock position) until the level is up to the bottom of the brake housing check hole. Install the plug.
7. Repeat the procedure on the opposite planetary/brake assembly.

Changing the Rear Axle Lubricant

Change the oil initially after the first 200 hours of operation and every 800 hours of operation thereafter.

1. Position the machine on a level surface.
2. Clean the area around the 3 drain plugs, 1 on each end and 1 in the center (Fig. 66).
3. Remove the (3) oil level check plugs and main axle vent cap to ease in draining of the oil.
4. Remove the drain plugs and allow the oil to drain into the pans.

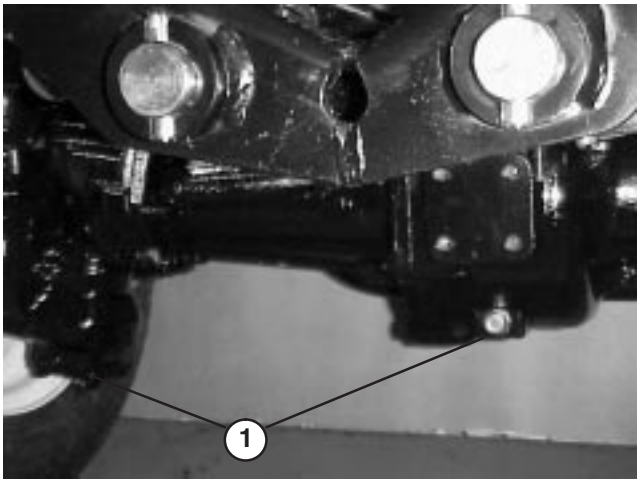

Figure 66

1. Drain plug location

5. Install the plugs.
6. Remove a check plug and fill axle with approximately 80 oz. of 85W–140 gear lube or until lubricant is up to bottom of hole.
7. Install check plug.

Rear Wheel Toe-In

After every 800 operating hours or annually, check rear wheel toe-in.

1. Measure center-to-center distance (at axle height) at front and rear of steering tires. Front measurement must be 1/4 in. less than rear measurement.
2. To adjust**,** loosen clamps at both ends of tie rods.
3. Rotate tie rod end to move front of tire inward or outward.
4. Tighten tie rod clamps when adjustment is correct.

Battery Care

Warning

CALIFORNIA

Proposition 65 Warning

Battery posts, terminals, and related accessories contain lead and lead compounds, chemicals known to the State of California to cause cancer and reproductive harm. *Wash hands after handling.*

Important Before welding on a machine, disconnect both cables from the battery, disconnect both wire harness plugs from the electronic control unit and the terminal connector from the alternator to prevent damage to the electrical system.

Warning

Battery terminals or metal tools could short against metal tractor components causing sparks. Sparks can cause the battery gasses to explode, resulting in personal injury.

- **When removing or installing the battery, do not allow the battery terminals to touch any metal parts of the machine.**
- **Do not allow metal tools to short between the battery terminals and metal parts of the machine.**

Warning

Incorrect battery cable routing could damage the tractor and cables causing sparks. Sparks can cause the battery gasses to explode, resulting in personal injury.

- **Always *disconnect* the negative (black) battery cable before disconnecting the positive (red) cable.**
- **Always *connect* the positive (red) battery cable before connecting the negative (black) cable.**

Note: Check battery condition weekly or after every 50 hours of operation. Keep terminals and entire battery case clean because a dirty battery will discharge slowly. To clean the battery, wash the entire case with solution of baking soda and water. Rinse with clear water. Coat the battery posts and cable connectors with Grafo 112X (skin-over) grease (Toro Part No. 505-47) or petroleum jelly to prevent corrosion.

Danger

Battery electrolyte contains sulfuric acid which is a deadly poison and causes severe burns.

- **Do not drink electrolyte and avoid contact with skin, eyes or clothing. Wear safety glasses to shield your eyes and rubber gloves to protect your hands.**
- **Fill the battery where clean water is always available for flushing the skin.**

Fuses

There are 7 fuses in the machines electrical system. They are located below the operators control panel (Fig. 67 and 68).

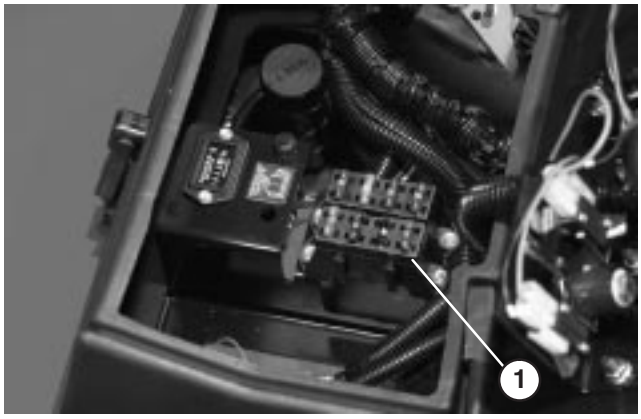

Figure 67

1. Fuses

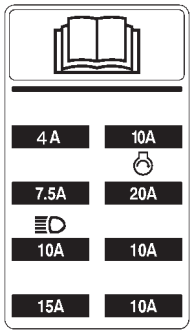

Figure 68

Optional Lighting

Important If optional lighting is be added to the traction unit, use the schematic in Figure 69 and part numbers listed below to prevent damage to the traction units electrical system.

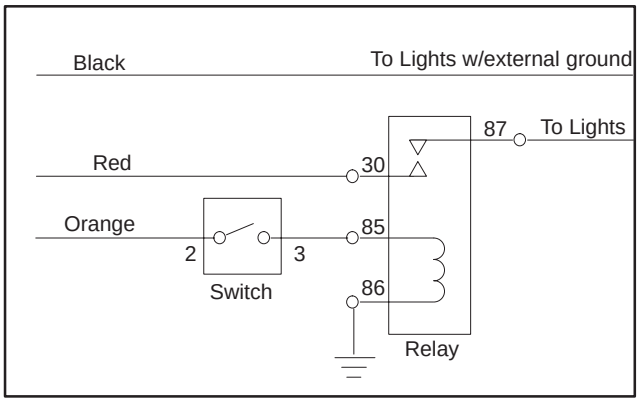

Figure 69

Switch*	Relay
Toro Part No. 75-1010	Toro Part No. 70-1490
Honeywell Part No. 1TL1-2	Bosch Part No. 0-332-204

* Punch out in control panel provided for switch installation

A Relay Wire Harness (Toro Part No. 77-4200) is available for use when adding electrical accessories such as lights.

Note: When adding a Relay Wire Harness, connect the wires as follows:

Blue wire to accessory

Red wire to power source

Black wire to ground

Gray wire to on/off switch

Black, red, and orange wires are located in the control console.

Add a 10 amp. fuse to the fuse block at the location shown. Do no exceed the fuse rating.

Electrical Schematic

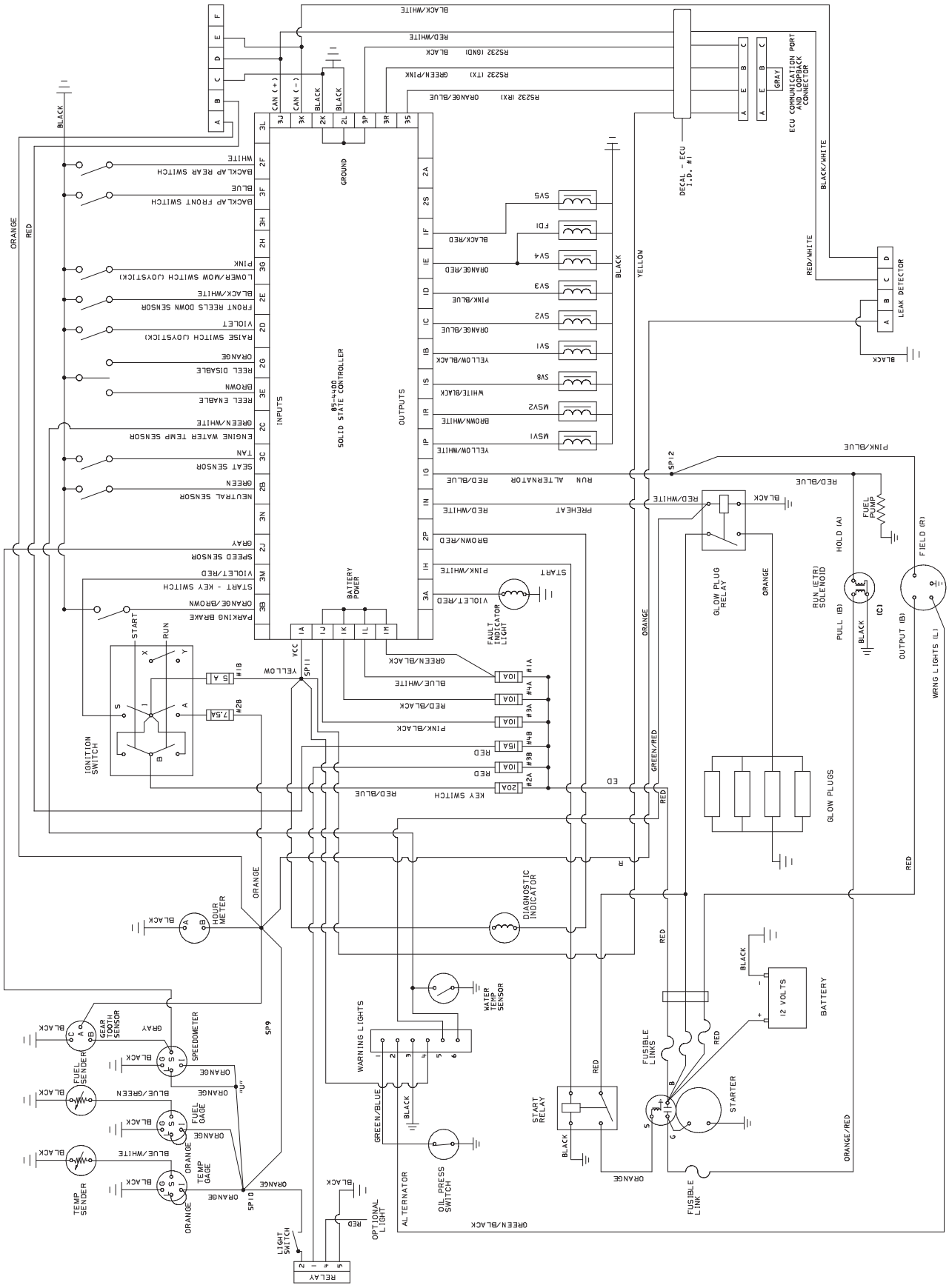

Backlapping

Danger

The reels may stall while backlapping and could restart suddenly. Contact with the reels during backlapping will cause personal injury.

- **Never place hands or feet in the reel area while the engine is running.**
- **Never attempt to turn the reels by hand or foot or touch the reels while backlapping.**
- **Never change engine speed while backlapping. Only backlap at idle speed.**
- **Stop the engine and move the desired reel speed selector knob(s) one position closer to "13."**

Note: When backlapping, the front units all operate together, and the rear units operate together.

1. Position the machine on a level surface, lower the cutting units, stop the engine, engage the parking brake, and move the Enable/Disable switch to disable position.
2. Unlock and raise the seat to expose controls.
3. Locate the reel speed selector knobs and backlap knobs (Fig. 70). Rotate the desired backlap knob(s) to the backlap position and the desired reel speed selector knob(s) to position "1."

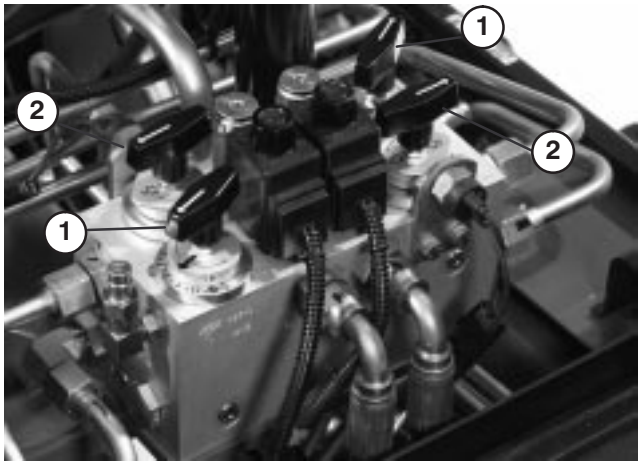

Figure 70

1. Reel speed selector knobs
2. Backlap knobs

Note: Backlapping speed may be increased by moving the reel speed selector knob toward "13." Each position will increase speed approximately 100 rpm. After changing selector, wait 30 seconds for the system to stabilize at the new speed.

4. Make initial reel to bedknife adjustments appropriate for backlapping on all cutting units which are to be backlapped.
5. Start engine and run at **idle speed**.

Caution

Contact with the reels or other moving parts can result in personal injury.

- **Keep finger, hands, and clothing away from the reels and other moving parts.**
- **Never use a short handles brush to apply lapping compound.**

6. Select either front, rear, or both backlap knobs to determine which reels will be backlapped.
7. Move Enable/Disable switch to Enable position. Move Lower Mow/Lift control forward to start backlapping operation on designated reels.
8. Apply lapping compound with a long handle brush (Toro Part No. 29-9100). Never use a short handled brush (Fig. 71).

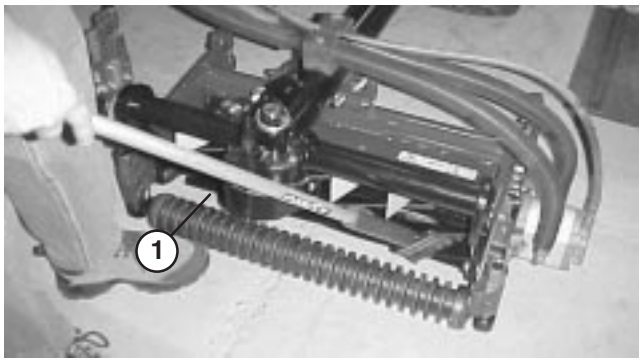

Figure 71

1. Long handled brush

9. If reels stall or become erratic while backlapping, stop backlapping by moving the Lower Mow/Lift control lever rearward. Once the reels have stopped, move the desired reel speed selector knob(s) one position closer to "13." Resume backlapping by moving the Lower Mow/Lift control lever forward.
10. To make an adjustment to the cutting units while backlapping, turn reels OFF by moving the Lower Mow/Raise lever rearward; move the Enable/Disable switch to Disable and turn the engine OFF. After adjustments have been completed, repeat steps 5–9.
11. When the cutting unit is adequately sharpened, a burr will form on the front edge of the knife. Using a file, carefully remove the burr without dulling the cutting edge (Fig. 72).

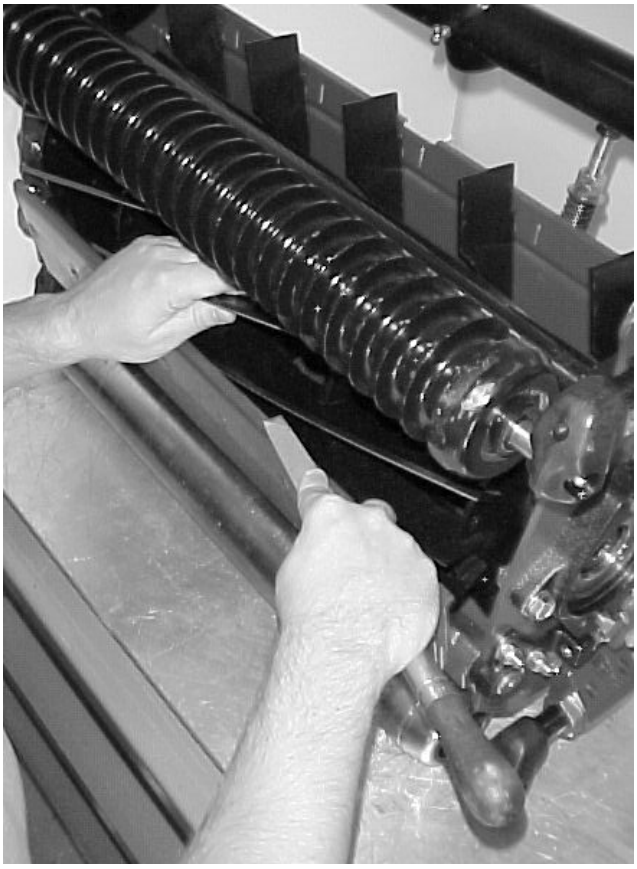

Figure 72

12. Repeat procedure for all cutting units to be backlapped.

When backlap operation has been completed, return the backlap knobs to the forward flow position, lower seat and wash all lapping compound off cutting units. Adjust cutting unit reel to bedknife as needed.

Note: If the backlap knobs are not returned to the forward flow position after backlapping, the cutting units will not raise or function properly.

Storage

Traction Unit

1. Thoroughly clean the traction unit, cutting units and the engine.
2. Check the tire pressure. Inflate all tires to 15–20 psi.
3. Check all fasteners for looseness; tighten as necessary.
4. Grease or oil all grease fittings and pivot points. Wipe up any excess lubricant.
5. Lightly sand and use touch-up paint on painted areas that are scratched, chipped, or rusted. Repair any dents in the metal body.
6. Service the battery and cables as follows:
   A. Remove the battery terminals from the battery posts.
   B. Clean the battery, terminals, and posts with a wire brush and baking soda solution.
   C. Coat the cable terminals and battery posts with Grafo 112X skin-over grease (Toro Part No. 505-47) or petroleum jelly to prevent corrosion.
   D. Slowly recharge the battery every 60 days for 24 hours to prevent lead sulfation of the battery.

Warning

Charging the battery produces gasses that can explode.

Never smoke near the battery and keep sparks and flames away from battery.

Engine

1. Drain the engine oil from the oil pan and replace the drain plug.
2. Remove and discard the oil filter. Install a new oil filter.
3. Refill oil pan with 7.5 qts. (7 l) of SAE10W-30 CD, CE, CF, CF-4, or CG-4 motor oil.
4. Start the engine and run at idle speed for approximately two minutes.
5. Stop the engine.
6. Flush the fuel tank with fresh, clean diesel fuel.
7. Secure all fuel system fittings.
8. Thoroughly clean and service the air cleaner assembly.
9. Seal the air cleaner inlet and the exhaust outlet with weatherproof tape.
10. Check anti freeze protection and add a 50/50 solution of water and anti freeze as needed for expected minimum temperature in your area.

The Toro General Commercial Products Warranty

A Two-Year Limited Warranty

Conditions and Products Covered

The Toro Company and its affiliate, Toro Warranty Company, pursuant to an agreement between them, jointly warrant your Toro Commercial Product ("Product") to be free from defects in materials or workmanship for two years or 1500 operational hours*, whichever occurs first. Where a warrantable condition exists, we will repair the Product at no cost to you including diagnosis, labor, parts, and transportation. This warranty begins on the date the Product is delivered to the original retail purchaser.

* Product equipped with hour meter

Instructions for Obtaining Warranty Service

You are responsible for notifying the Commercial Products Distributor or Authorized Commercial Products Dealer from whom you purchased the Product as soon as you believe a warrantable condition exists.

If you need help locating a Commercial Products Distributor or Authorized Dealer, or if you have questions regarding your warranty rights or responsibilities, you may contact us at:

Toro Commercial Products Service Department
Toro Warranty Company
8111 Lyndale Avenue South
Bloomington, MN 55420-1196
952-888-8801 or 800-982-2740
E-mail: commercial.service@toro.com

Owner Responsibilities

As the Product owner, you are responsible for required maintenance and adjustments stated in your operator's manual. Failure to perform required maintenance and adjustments can be grounds for disallowing a warranty claim.

Items and Conditions Not Covered

Not all product failures or malfunctions that occur during the warranty period are defects in materials or workmanship. This express warranty does not cover the following:

- Product failures which result from the use of non-Toro replacement parts, or from installation and use of add-on, modified, or unapproved accessories
- Product failures which result from failure to perform required maintenance and/or adjustments
- Product failures which result from operating the Product in an abusive, negligent or reckless manner
- Parts subject to consumption through use unless found to be defective. Examples of parts which are consumed, or used up, during normal Product operation include, but are not limited to, blades, reels, bedknives, tines, spark plugs, castor wheels, tires, filters, belts, etc.
- Failures caused by outside influence. Items considered to be outside influence include, but are not limited to, weather, storage practices, contamination, use of unapproved coolants, lubricants, additives, or chemicals, etc.
- Normal "wear and tear" items. Normal "wear and tear" includes, but is not limited to, damage to seats due to wear or abrasion, worn painted surfaces, scratched decals or windows, etc.

Parts

Parts scheduled for replacement as required maintenance are warranted for the period of time up to the scheduled replacement time for that part.

Parts replaced under this warranty become the property of Toro. Toro will make the final decision whether to repair any existing part or assembly or replace it. Toro may use factory remanufactured parts rather than new parts for some warranty repairs.

General Conditions

Repair by an Authorized Toro Distributor or Dealer is your sole remedy under this warranty.

Neither The Toro Company nor Toro Warranty Company is liable for indirect, incidental or consequential damages in connection with the use of the Toro Products covered by this warranty, including any cost or expense of providing substitute equipment or service during reasonable periods of malfunction or non-use pending completion of repairs under this warranty. Except for the Emissions warranty referenced below, if applicable, there is no other express warranty. All implied warranties of merchantability and fitness for use are limited to the duration of this express warranty.

Some states do not allow exclusions of incidental or consequential damages, or limitations on how long an implied warranty lasts, so the above exclusions and limitations may not apply to you.

This warranty gives you specific legal rights, and you may also have other rights which vary from state to state.

Note regarding engine warranty: The Emissions Control System on your Product may be covered by a separate warranty meeting requirements established by the U.S. Environmental Protection Agency (EPA) and/or the California Air Resources Board (CARB). The hour limitations set forth above do not apply to the Emissions Control System Warranty. Refer to the Engine Emission Control Warranty Statement printed in your operator's manual or contained in the engine manufacturer's documentation for details.

Countries Other than the United States or Canada

Customers who have purchased Toro products exported from the United States or Canada should contact their Toro Distributor (Dealer) to obtain guarantee policies for your country, province, or state. If for any reason you are dissatisfied with your Distributor's service or have difficulty obtaining guarantee information, contact the Toro importer. If all other remedies fail, you may contact us at Toro Warranty Company.

Part No. 374-0031 Rev. a