Form No. 3442-234 Rev B

TimeMaster® 76cm Lawn Mower

Model No. 21810—Serial No. 407300000 and Up

Model No. 21811—Serial No. 406800000 and Up

Operator's Manual

Introduction

This rotary-blade, walk-behind lawn mower is intended to be used by residential homeowners. It is designed primarily for cutting grass on well-maintained lawns on residential properties. Using this product for purposes other than its intended use could prove dangerous to you and bystanders.

Read this information carefully to learn how to operate and maintain your product properly and to avoid injury and product damage. You are responsible for operating the product properly and safely.

Visit www.Toro.com for more information, including safety tips, training materials, accessory information, help finding a dealer, or to register your product.

Whenever you need service, genuine Toro parts, or additional information, contact an Authorized Service Dealer or Toro Customer Service and have the model and serial numbers of your product ready. Figure 1 identifies the location of the model and serial numbers on the product. Write the numbers in the space provided.

Important: **With your mobile device, you can scan the QR code on the serial number decal (if equipped) to access warranty, parts, and other product information**

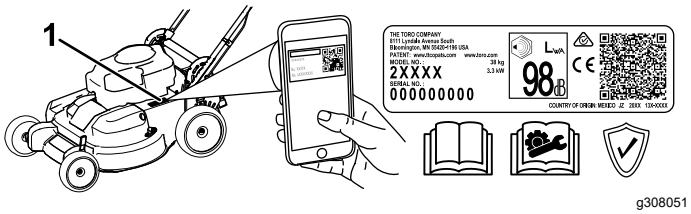

g308051

Figure 1

1. Model and serial number location

Model No. _____

Serial No. _____

Safety-Alert Symbol

The safety-alert symbol (Figure 2) shown in this manual and on the machine identifies important safety messages that you must follow to prevent accidents.



g000502

Figure 2

Safety-alert symbol

The safety-alert symbol appears above information that alerts you to unsafe actions or situations and is followed by the word **DANGER**, **WARNING**, or **CAUTION**.

DANGER indicates an imminently hazardous situation which, if not avoided, **will** result in death or serious injury.

WARNING indicates a potentially hazardous situation which, if not avoided, **could** result in death or serious injury.

CAUTION indicates a potentially hazardous situation which, if not avoided, **may** result in minor or moderate injury.

This manual uses two other words to highlight information. **Important** calls attention to special mechanical information and **Note** emphasizes general information worthy of special attention.

This product complies with all relevant European directives; for details, please see the separate product specific Declaration of Conformity (DOC) sheet.

Gross or Net Torque: The gross or net torque of this engine was laboratory rated by the engine manufacturer in accordance with the Society of Automotive Engineers (SAE) J1940 or J2723. As configured to meet safety, emission, and operating requirements, the actual engine torque on this class of mower will be significantly lower. Please refer to the engine manufacturer's information included with the machine.

Do not tamper with or disable safety devices on the machine, and check their proper operation regularly. Do not attempt to adjust or tamper with the engine

© 2025—The Toro® Company
8111 Lyndale Avenue South
Bloomington, MN 55420

Register at www.Toro.com.

CE UK CA

Original Instructions (EN)
Printed in Mexico
All Rights Reserved

3442-234

speed control; doing so may create an unsafe operating condition, resulting in personal injury.

Contents

Introduction 1
- Safety-Alert Symbol 1

Safety 3
- General Safety 3
- Safety and Instructional Decals 4

Setup 5
- 1 Assembling and Unfolding the Handle 5
- 2 Installing the Blade-Control Bar 5
- 3 Adding Oil to the Engine 7
- 4 Assembling the Grass Bag 8
- 5 Charging the Battery 8

Product Overview 9
- Specifications 10
- Attachments/Accessories 10

Operation 10
- Before Operation 10
  - Before Operation Safety 10
  - Filling the Fuel Tank 11
  - Checking the Engine-Oil Level 12
  - Adjusting the Handle Height 12
  - Adjusting the Cutting Height 13
- During Operation 13
  - During Operation Safety 13
  - Starting the Engine 14
  - Using the Self-Propel Drive 16
  - Shutting Off the Engine 17
  - Engaging the Blades 17
  - Disengaging the Blades 17
  - Checking the Blade-Stop System Operation 18
  - Recycling the Clippings 18
  - Bagging the Clippings 19
  - Side-Discharging the Clippings 19
  - Operating Tips 20
- After Operation 20
  - After Operation Safety 20
  - Cleaning Under the Machine 20
  - Folding the Handle 21

Maintenance 22
- Recommended Maintenance Schedule(s) 22
  - Maintenance Safety 22
  - Preparing for Maintenance 22
  - Servicing the Air Filter 23
  - Changing the Engine Oil 23
  - Charging the Battery 25
  - Replacing the Fuse 25
  - Replacing the Battery 25
  - Adjusting the Self-Propel Drive 26
  - Servicing the Blade-Drive System 27
  - Servicing the Blades 27
  - Checking for Bent Blades 28
  - Removing the Blades 29
  - Installing the Blades 29

Storage 30
- Storage Safety 30

General Information 30
Preparing the Fuel System 30
Preparing the Engine 31
Removing the Machine from Storage 31

Safety

General Safety

This product is capable of amputating hands and feet and of throwing objects. Always follow all safety instructions to avoid serious personal injury or death.

- Read, understand, and follow the instructions and warnings in this *Operator's Manual* and on the machine and attachments before starting the engine.
- Do not put your hands or feet near moving parts or under the machine. Keep clear of any discharge opening.
- Do not operate the machine without all guards and other safety protective devices in place and functioning properly on the machine.
- Keep bystanders and children out of the operating area. Do not allow children to operate the machine. Allow only people who are responsible, trained, familiar with the instructions, and physically capable to operate the machine.
- Stop the machine, shut off the engine, remove the ignition key (if equipped), and wait for all moving parts to stop before servicing, fueling, or unclogging the machine.

Improperly using or maintaining this machine can result in injury. To reduce the potential for injury, comply with these safety instructions and always pay attention to the safety-alert symbol ⚠, which means Caution, Warning, or Danger—personal safety instruction. Failure to comply with these instructions may result in personal injury or death.

Safety and Instructional Decals

Safety decals and instructions are easily visible to the operator and are located near any area of potential danger. Replace any decal that is damaged or missing.

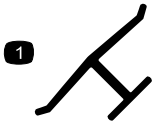

decaloemmarkt

Manufacturer's Mark

1. This mark indicates that the blade is identified as a part from the original machine manufacturer.

Electric-start model only

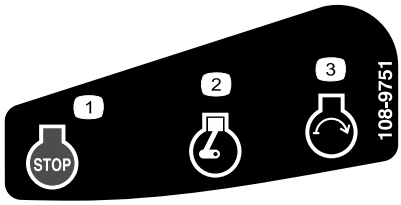

decal108-9751

108-9751

1. Engine—stop (shut off)
2. Engine—run
3. Engine—start

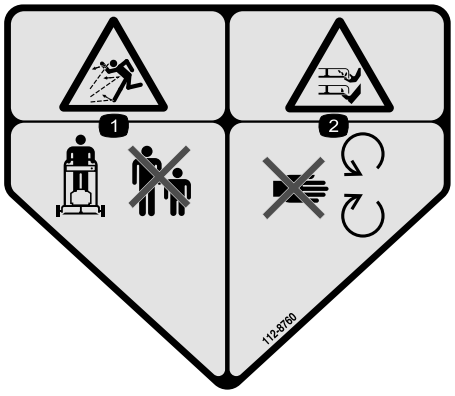

decal112-8760

112-8760

1. Thrown object hazard—keep bystanders away.
2. Cutting/dismemberment hazard of hand or foot, mower blade—stay away from moving parts.

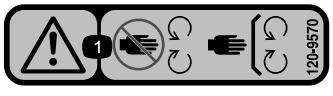

decal120-9570

120-9570

1. Warning—stay away from moving parts; keep all guards and shields in place.

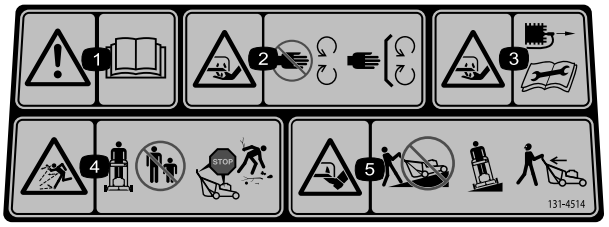

decal131-4514

131-4514

1. Warning—read the *Operator's Manual*.
2. Cutting/dismemberment hazard of hand, mower blade—stay away from moving parts; keep all guards and shields in place.
3. Cutting/dismemberment hazard of hand, mower blade—disconnect the spark-plug wire before performing maintenance.
4. Thrown object hazard—keep bystanders away; shut off the engine before leaving the operating position; pick up any debris before mowing.
5. Cutting/dismemberment hazard of foot, mower blade—do not operate up and down slopes; operate side to side on slopes; look behind you when moving in reverse.

Electric-start model only

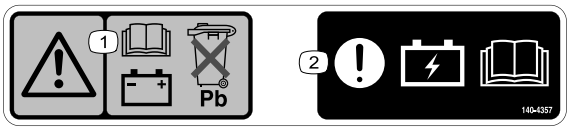

decal140-4357

140-4357

1. Warning—read the *Operator's Manual* for battery information; do not discard the lead battery.
2. Attention—read the *Operator's Manual* for battery charging information.

Setup

Important: **Remove and discard the protective plastic sheet that covers the engine and any other plastic or wrapping on the machine.**

Important: **To prevent accidental starting, do not insert the key into the electric-start ignition (if equipped) until you are ready to start the engine.**

1

Assembling and Unfolding the Handle

No Parts Required

Procedure

⚠ WARNING

Assembling and unfolding the handle improperly can damage the cables, causing an unsafe operating condition.

- **Do not damage the cables when unfolding the handle.**
- **If a cable is damaged, contact an Authorized Service Dealer.**

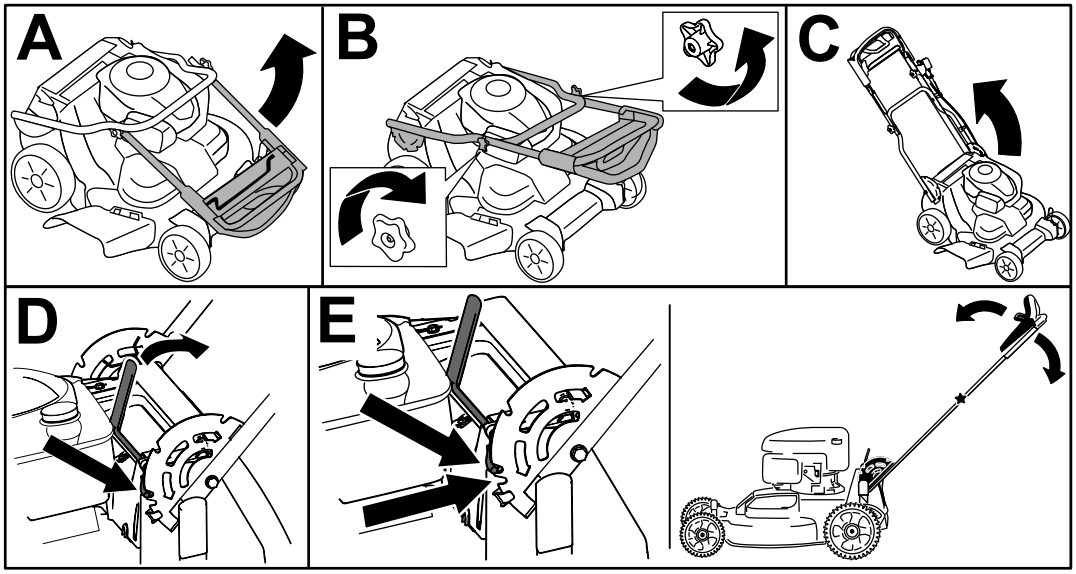

g224528

Figure 3

2

Installing the Blade-Control Bar

No Parts Required

Procedure

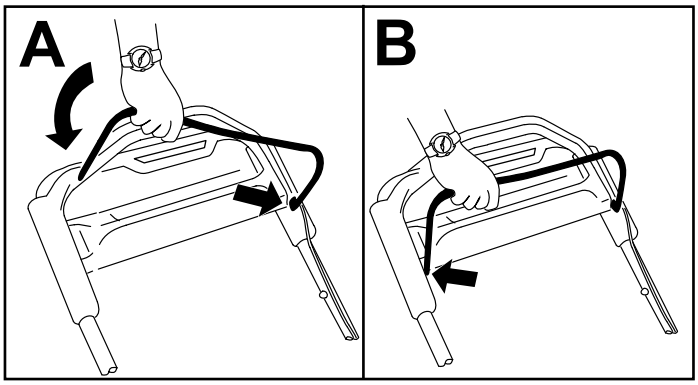

g225133

Figure 4

3

Adding Oil to the Engine

No Parts Required

Procedure

Important: **If the oil level in the engine is too low or too high and you run the engine, you may damage the engine.**

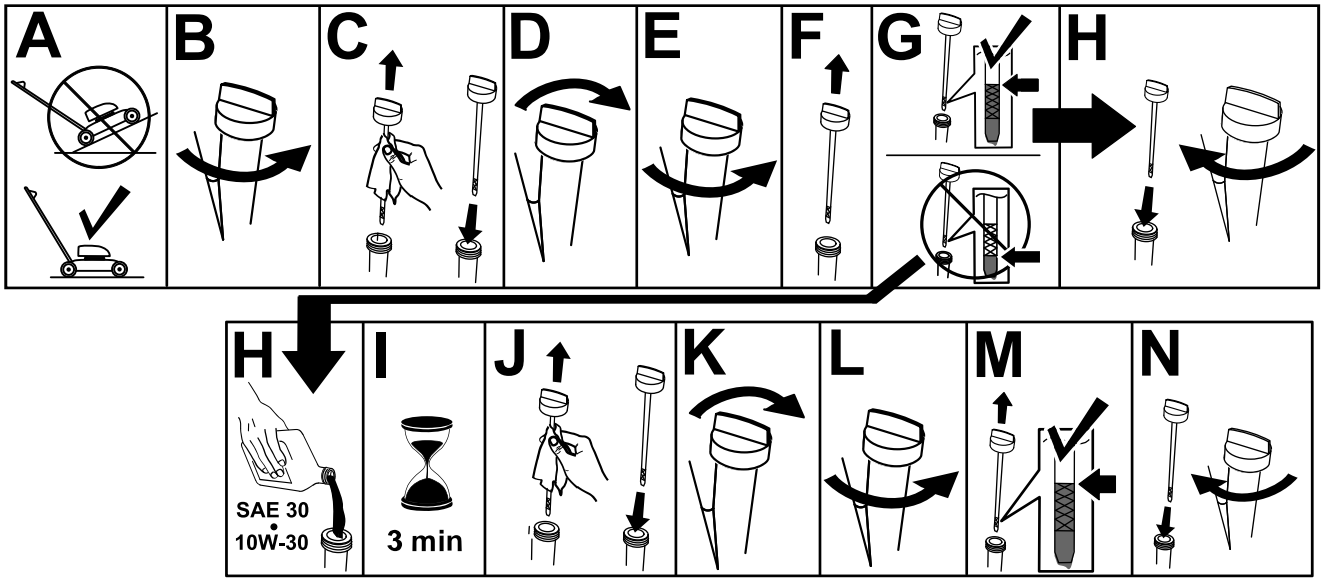

Figure 5

4

Assembling the Grass Bag

No Parts Required

Procedure

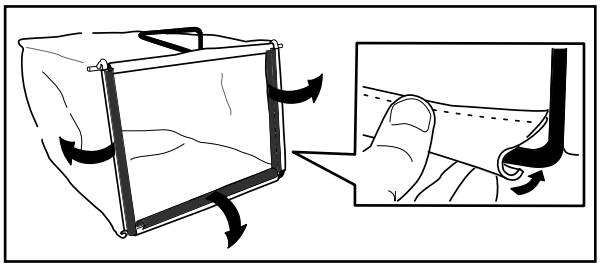

g230447

Figure 6

5

Charging the Battery

No Parts Required

Procedure

Electric-Start Model Only

Refer to Charging the Battery (page 25).

Product Overview

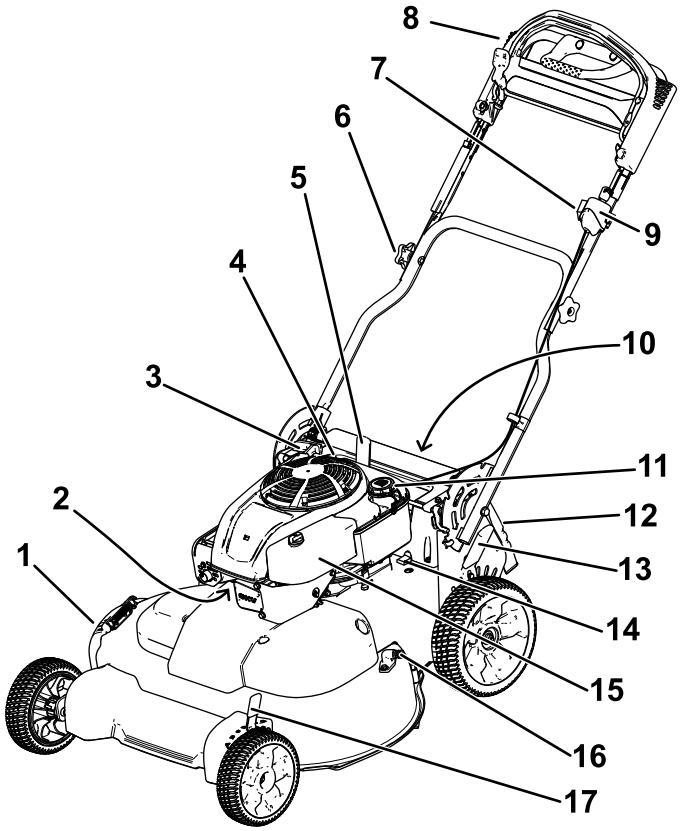

Figure 7

1. Side-discharge deflector
2. Spark plug
3. Recoil-start handle
4. Oil fill/dipstick
5. Handle-lock lever
6. Handle knob (2)
7. Adjustment for the self-propel drive
8. Upper handle
9. Ignition switch (electric-start model only) or toggle switch (standard model only)
10. Battery (electric-start model only; not shown)
11. Fuel-tank cap
12. Rear deflector
13. Rear cutting-height lever
14. Fuse
15. Air filter
16. Washout port
17. Front cutting-height lever

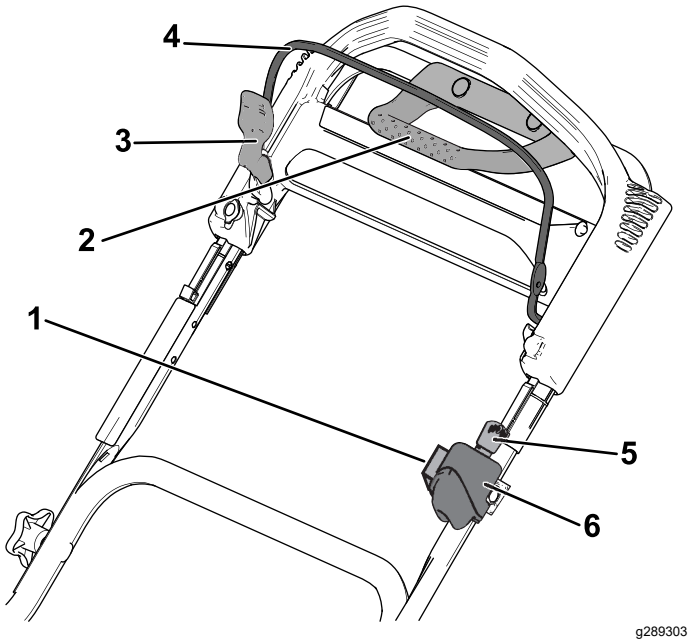

Figure 8
Upper handle

1. Adjustment for the self-propel drive
2. Traction-assist handle
3. Blade-control-bar lock
4. Blade-control bar
5. Ignition key (electric-start model only)
6. Ignition switch (electric-start model only) or toggle switch (standard model only)

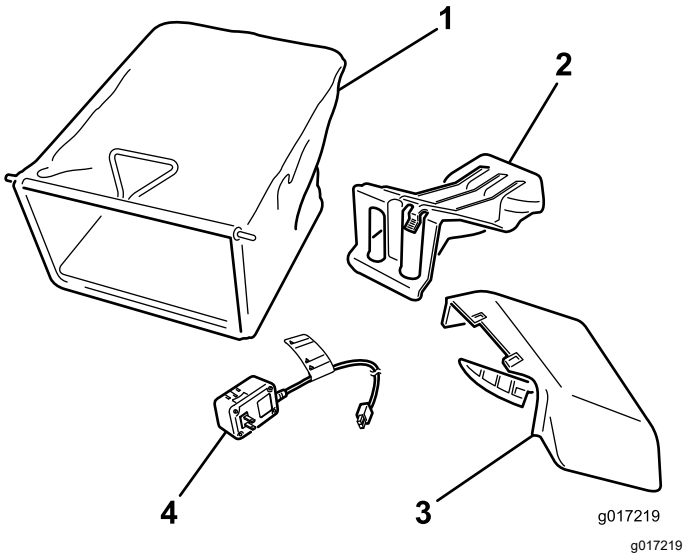

Figure 9

1. Grass bag
2. Rear-discharge plug (installed)
3. Side-discharge chute
4. Battery charger (electric-start model only)

Specifications

Model	Weight	Length	Width	Height
21810	64 kg (140 lb)	165 cm (65 inches)	81 cm (32 inches)	114 cm (45 inches)
21811	66 kg (145 lb)			

Attachments/Accessories

A selection of Toro approved attachments and accessories is available for use with the machine to enhance and expand its capabilities. Contact your Authorized Service Dealer or authorized Toro distributor or go to www.Toro.com for a list of all approved attachments and accessories.

To ensure optimum performance and continued safety certification of the machine, use only genuine Toro replacement parts and accessories. Replacement parts and accessories made by other manufacturers could be dangerous, and such use could void the product warranty.

Operation

Note: Determine the left and right sides of the machine from the normal operating position.

Before Operation

Before Operation Safety

General Safety

- Always shut off the machine, remove the ignition key (if equipped), wait for all moving parts to stop, and allow the machine to cool before adjusting, servicing, cleaning, or storing it.
- Become familiar with the safe operation of the equipment, operator controls, and safety signs.
- Check that all guards and safety devices, such as deflectors and/or grass catcher, are in place and functioning properly.
- Always inspect the machine to ensure that the blades and blade bolts are not worn or damaged.
- Inspect the area where you will use the machine, and remove all objects that could interfere with the operation of the machine or that the machine could throw.
- Contact with the moving blade will cause serious injury. Do not put your fingers under the housing.

Fuel Safety

- Fuel is extremely flammable and highly explosive. A fire or explosion from fuel can burn you and others and can damage property.
  - To prevent a static charge from igniting the fuel, place the container and/or machine directly on the ground before filling, not in a vehicle or on an object.
  - Fill the fuel tank outdoors, in an open area, when the engine is cold. Wipe up any fuel that spills.
  - Do not handle fuel when smoking or around an open flame or sparks.
  - Do not remove the fuel cap or add fuel to the tank while the engine is running or hot.
  - If you spill fuel, do not attempt to start the engine. Avoid creating a source of ignition until the fuel vapors have dissipated.
  - Store fuel in an approved container and keep it out of the reach of children.
- Fuel is harmful or fatal if swallowed. Long-term exposure to vapors can cause serious injury and illness.
  - Avoid prolonged breathing of vapors.
  - Keep your hands and face away from the nozzle and the fuel-tank opening.
  - Keep fuel away from your eyes and skin.

Filling the Fuel Tank

Type	Unleaded gasoline
Minimum octane rating	87 (US) or 91 (research octane; outside the US)
Ethanol	No more than 10% by volume
Methanol	None
MTBE (methyl tertiary butyl ether)	Less than 15% by volume
Oil	Do not add to the fuel

Use only clean, fresh (no more than 30 days old), fuel from a reputable source.

Important: **To reduce starting problems, add fuel stabilizer/conditioner to fresh fuel as directed by the fuel-stabilizer/conditioner manufacturer.**

1. Clean around the fuel-tank cap and remove the cap from the tank.

   Important: **This machine is equipped with a premium fuel tank that uses a foam insert to prevent fuel agitation. Never remove the foam element, because it allows the engine to use all the fuel in the tank (A of Figure 10).**

   Note: Do not fill the fuel tank above the bottom of the fuel-tank neck (B of Figure 10).

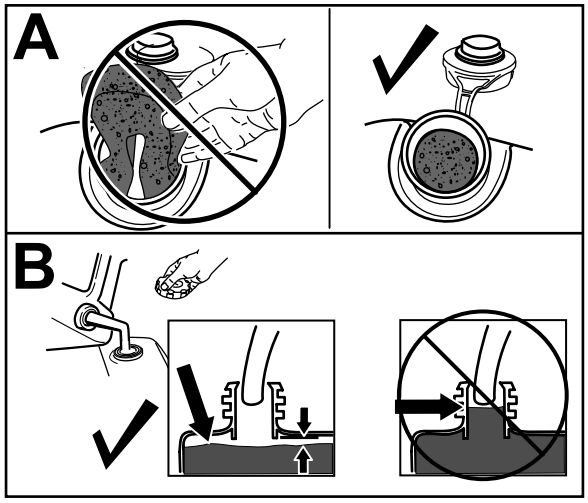

g234916

Figure 10

2. Install the fuel-tank cap and tighten it securely by hand.

Checking the Engine-Oil Level

Service Interval: Before each use or daily

Important: **If the oil level in the crankcase is too low or too high and you run the engine, you may damage the engine.**

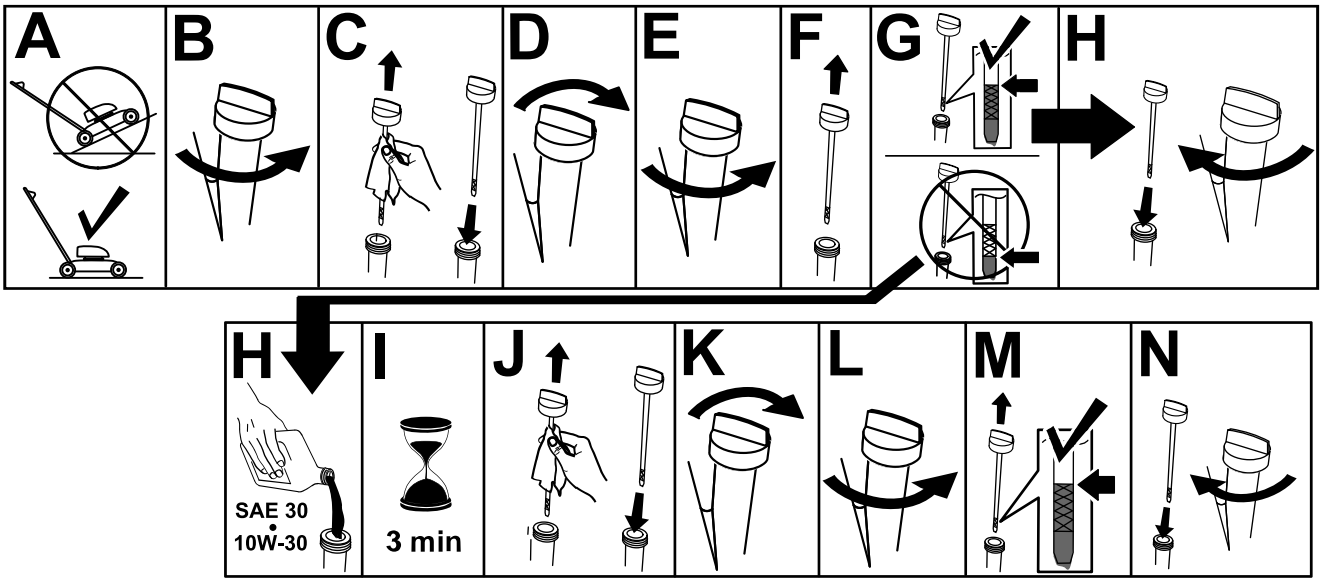

g222533

Figure 11

Adjusting the Handle Height

You may raise or lower the handle to a position comfortable for you.

Pull the handle-lock lever rearward to disengage the handle-lock pins, move the handle to 1 of 4 positions, and release the handle-lock lever to secure the handle in place. (Figure 12).

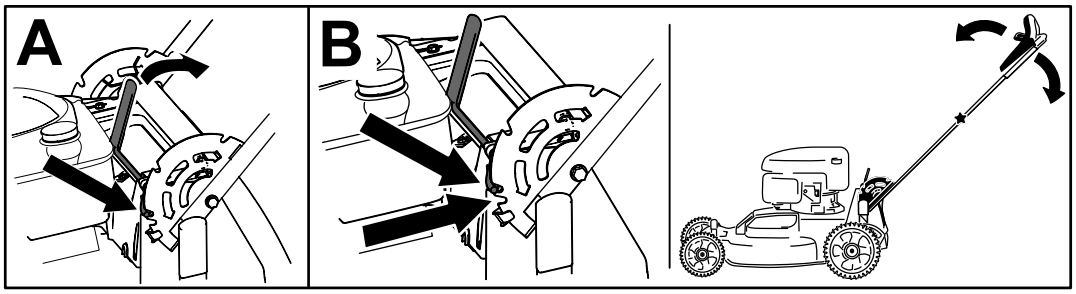

g273086

Figure 12

Adjusting the Cutting Height

⚠ DANGER

Adjusting the cutting-height levers could bring your hands into contact with a moving blade and result in serious injury.

- **Shut off the engine, remove the ignition key (if equipped), and wait for all moving parts to stop before adjusting the cutting height.**
- **Do not put your fingers under the housing when adjusting the cutting height.**

⚠ CAUTION

If the engine has been running, the muffler will be hot and can burn you.

Keep away from the hot muffler.

Note: To raise the machine, move the front and rear cutting-height levers forward; to lower the machine, move the cutting-height levers rearward. Set all the wheels to the same height unless special circumstances require otherwise.

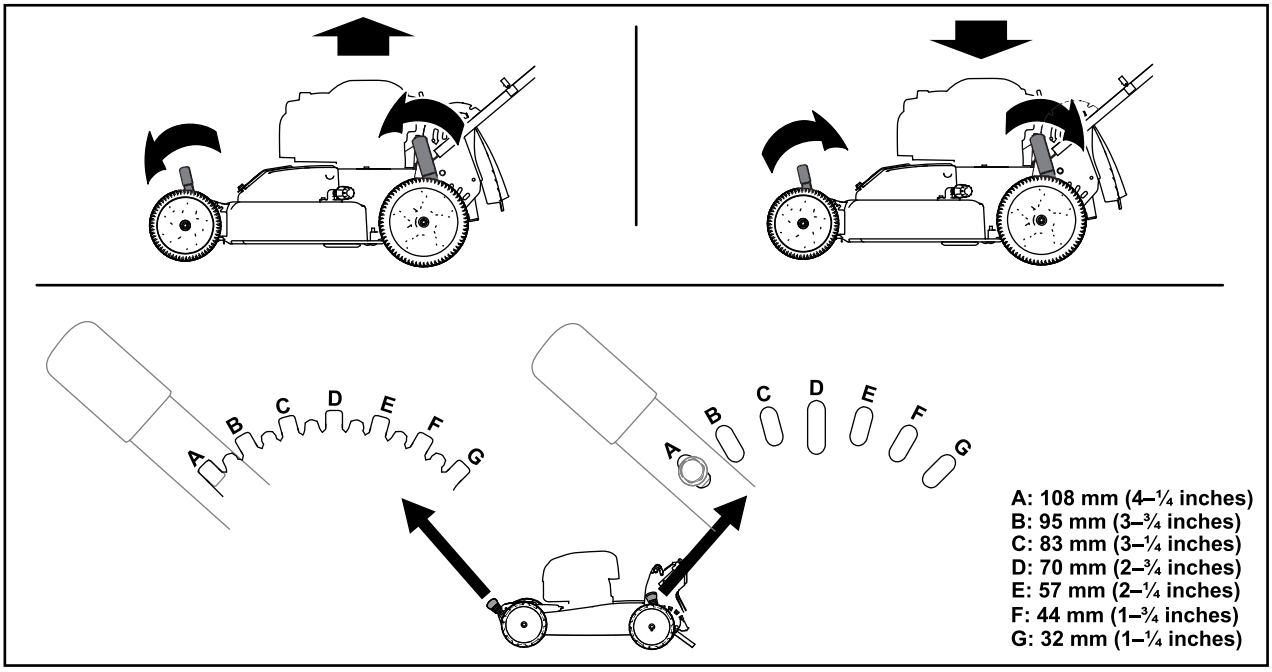

g224172

Figure 13

During Operation

During Operation Safety

General Safety

- Wear appropriate clothing, including eye protection; long pants; substantial, slip-resistant footwear; and hearing protection. Tie back long hair and do not wear loose clothing or loose jewelry.
- Use your full attention while operating the machine. Do not engage in any activity that causes distractions; otherwise, injury or property damage may occur.
- Do not operate the machine while ill, tired, or under the influence of alcohol or drugs.
- The blade is sharp; contacting the blade can result in serious personal injury. Shut off the engine, remove the ignition key (if equipped), and wait for all moving parts to stop before leaving the operating position.

- Keep bystanders out of the operating area. Keep small children out of the operating area and under the watchful care of a responsible adult who is not operating the machine. Stop the machine if anyone enters the area.
- Always look down and behind you before moving the machine in reverse.
- Operate the machine only in good visibility and appropriate weather conditions. Do not operate the machine when there is the risk of lightning.
- Wet grass or leaves can cause serious injury if you slip and contact the blade. Avoid mowing in wet conditions.
- Use extreme care when approaching blind corners, shrubs, trees, or other objects that may block your view.
- Do not direct the discharge material toward anyone. Avoid discharging material against a wall or obstruction; material may ricochet toward you. Stop the blade(s) when crossing gravel surfaces.
- Watch for holes, ruts, bumps, rocks, or other hidden objects. Uneven terrain could cause you to lose your balance or footing.
- If the machine strikes an object or starts to vibrate, immediately shut off the engine, remove the ignition key (if equipped), wait for all moving parts to stop, and disconnect the wire from the spark plug before examining the machine for damage. Make all necessary repairs before resuming operation.
- Before leaving the operating position, shut off the engine, remove the ignition key (if equipped), and wait for all moving parts to stop.
- If the engine has been running, it will be hot and can severely burn you. Keep away from the hot engine.
- Operate the engine only in well-ventilated areas. Exhaust gases contain carbon monoxide, which is an odorless, deadly poison.
- Check the grass catcher components and the discharge chute frequently for any wear or deterioration and replace them with genuine Toro parts when necessary.

Slope Safety

- Mow across the face of slopes; never up and down. Use extreme caution when changing direction on slopes.
- Do not mow on excessively steep slopes. Poor footing could cause a slip-and-fall accident.
- Mow with caution near drop-offs, ditches, or embankments.

Starting the Engine

Standard Model

Pull the recoil handle slowly until you feel resistance, then pull it sharply. Allow the rope to return to the engine slowly.

Note: If the machine does not start after several attempts, contact an Authorized Service Dealer.

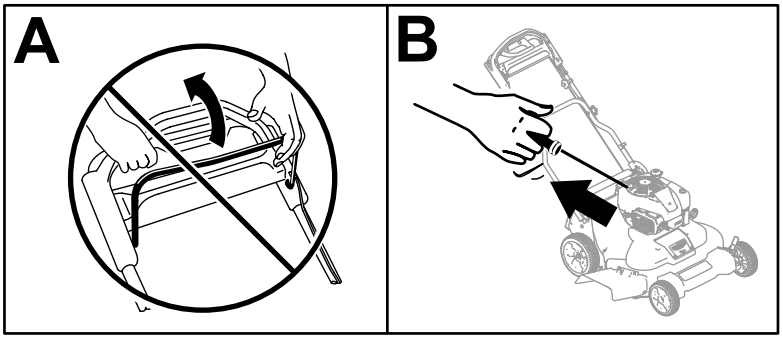

g234917

Figure 14

Electric-start Model

You can start the engine on an electric-start model by using either the ignition key or the recoil-start handle.

- **Ignition Key:**
  1. Charge the battery for 24 hours before using the machine for the first time (A of Figure 15).

Important: **Do not attempt to start the engine with the blade-control bar engaged; otherwise, you may blow the fuse (B of Figure 15).**

2. Insert the ignition key into the ignition (C of Figure 15).
3. Turn and hold the ignition key to the Start position; when the engine starts, release the key (D of Figure 15).

Note: Do not hold the ignition key in the Start position for longer than 5 seconds to prevent burning out the starter motor.

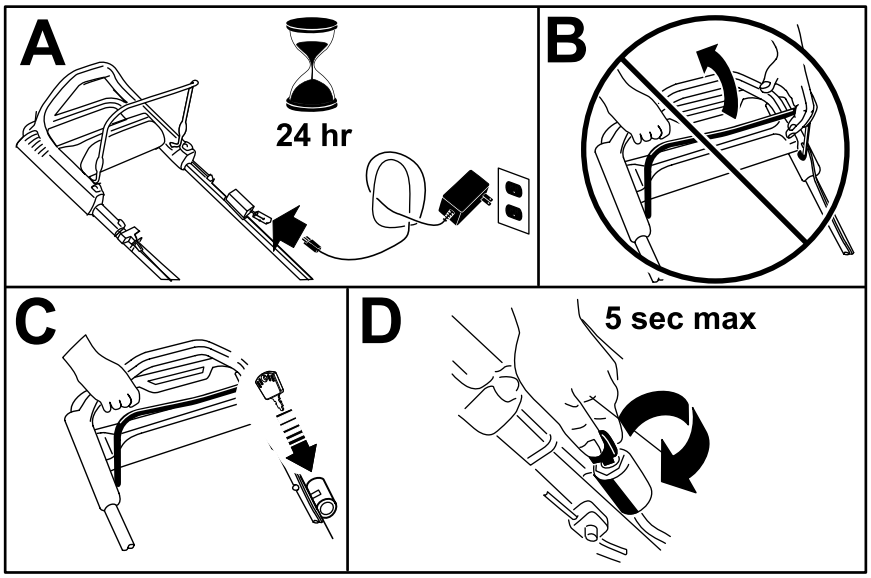

g234919

Figure 15

- **Recoil-Start Handle:**
  1. Turn the ignition key to the RUN position (A of Figure 16).

     Important: **Do not attempt to start the engine with the blade-control bar engaged; otherwise, you may blow the fuse (B of Figure 16).**
  2. Pull the recoil handle slowly to the rear until you feel resistance, then pull sharply (C of Figure 16). Allow the rope to return to the engine slowly.

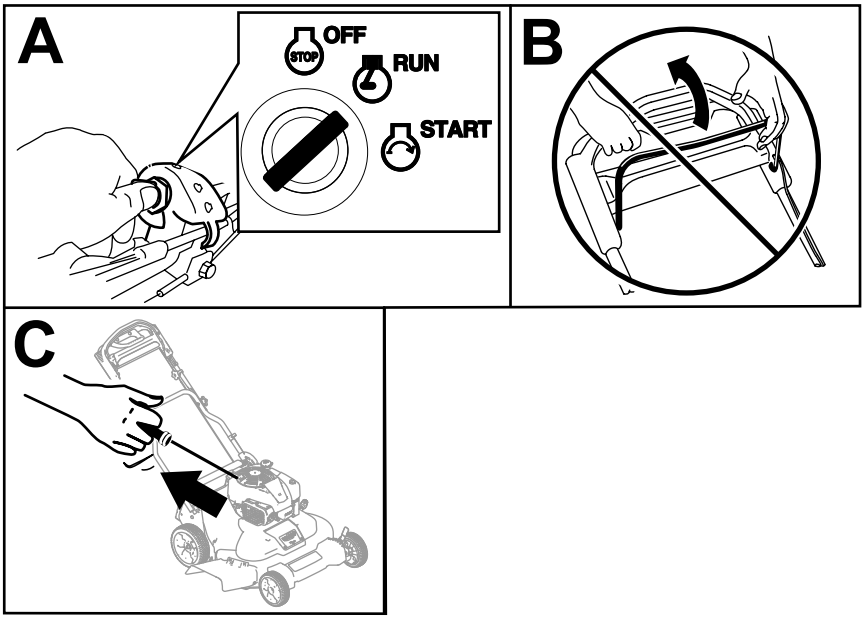

g234918

Figure 16

Using the Self-Propel Drive

To operate the self-propel drive, simply walk with your hands gripping the upper handle and your elbows at your sides, and the machine will automatically keep pace with you (Figure 17).

Note: You can self-propel the machine with the blades engaged or disengaged.

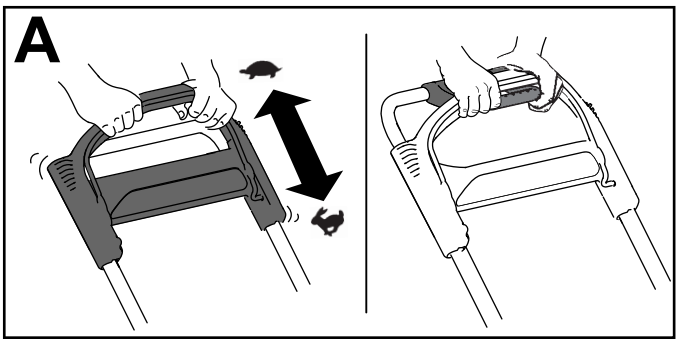

g244853

Figure 17

Note: Use the traction-assist handle in situations when you need more control than you have with the self-propel drive alone.

Shutting Off the Engine

Standard Model

Press the toggle switch (Figure 17) to the STOP position and hold it until the engine shuts off.

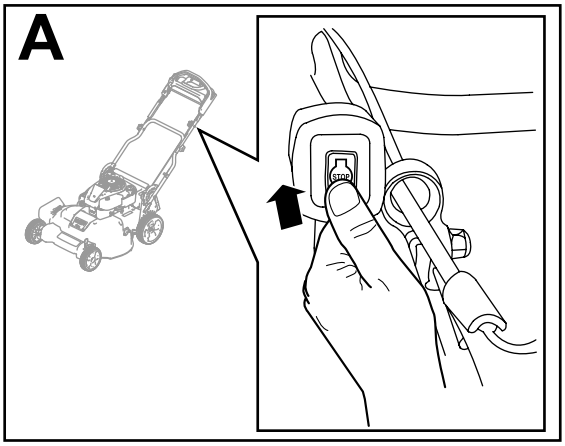

g311442

Figure 18

Electric-Start Model

1. Turn the ignition key to the OFF position (A of Figure 18).
2. When the engine shuts off, remove the ignition key and take it with you when you leave the machine (B of Figure 18).

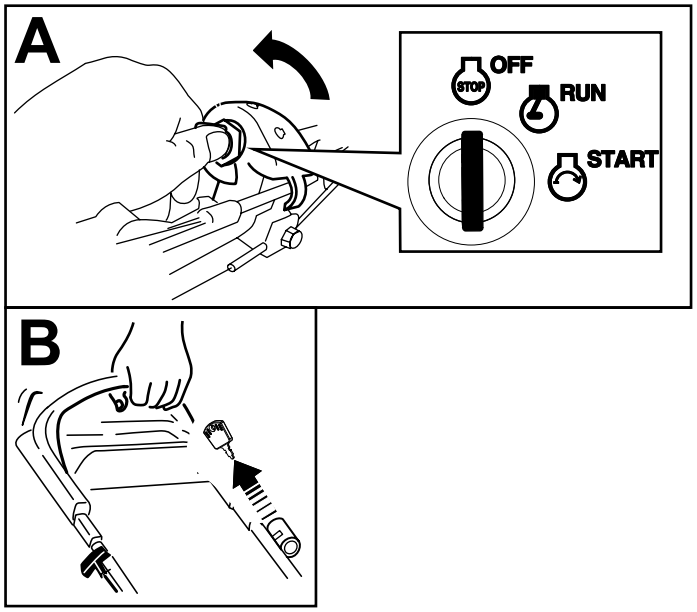

g234920

Figure 19

Engaging the Blades

When you start your engine, the blades do not turn. You must engage the blades to mow.

1. Pull the blade-control-bar lock back to the blade-control bar (Figure 20).

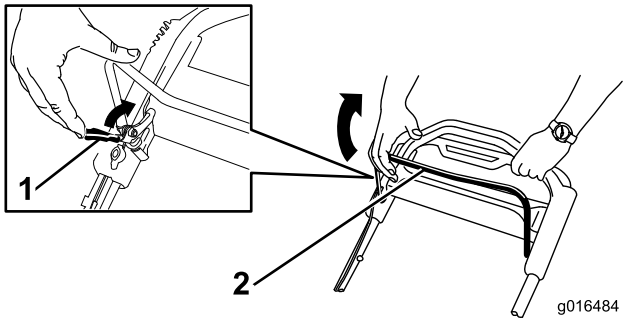

g016484

g016484

Figure 20

1. Blade-control bar lock
2. Blade-control bar

2. **Slowly** pull the blade-control bar back to the handle (Figure 20).
3. Hold the blade-control bar against the handle (Figure 21).

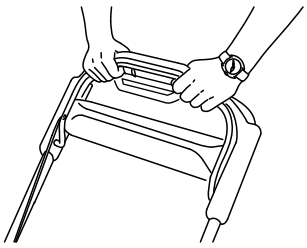

g193334

Figure 21

Disengaging the Blades

Release the blade-control bar (Figure 22).

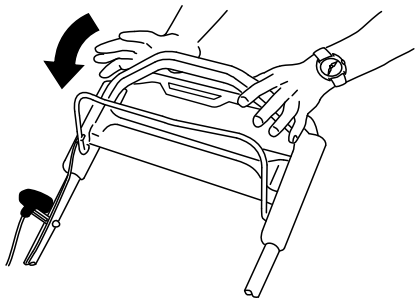

g193345

Figure 22

Important: **When you release the blade-control bar, the blades should stop within 3 seconds. If they do not stop properly, stop using your**

machine immediately and contact an Authorized Service Dealer.

Checking the Blade-Stop System Operation

Service Interval: Before each use or daily

Check that the blades stop within 3 seconds of releasing the blade-control bar.

Using the Grass Bag

You can use the grass bag to check the blade-stop system.

1. Remove the rear-discharge plug.
2. Install the empty grass bag on the machine.
3. Start the engine.
4. Engage the blades.

   Note: The bag should begin to inflate, indicating that the blades are rotating.
5. While watching the bag, release the blade-control bar.

   Note: If the bag does not deflate within 3 seconds of releasing the blade-control bar, the blade-stop system may be deteriorating and, if ignored, could result in an unsafe operating condition. Have the machine inspected and serviced by an Authorized Service Dealer.
6. Shut off the engine and wait for all moving parts to stop.

Not Using the Grass Bag

1. Move the machine onto a paved surface in a non-windy area.
2. Set all 4 wheels to the 89 mm (3-1/2 inch) cutting height setting.
3. Take a half sheet of newspaper and crumple it into a ball small enough to go under the machine housing (about 76 mm (3 inches) in diameter).
4. Place the newspaper ball about 13 cm (5 inches) in front of the machine.
5. Start the engine.
6. Engage the blades.
7. Release the blade-control bar and begin counting out 3 seconds.
8. On the count of 3, push the machine quickly forward over the newspaper.
9. Shut off the engine and wait for all moving parts to stop.
10. Go to the front of the machine and check the newspaper ball.

    Note: If the newspaper ball did not go under the machine, repeat steps 4 through 10.
11. If the newspaper is unravelled or shredded, the blades did not stop properly, which could result in an unsafe operating condition. Contact an Authorized Service Dealer.

Recycling the Clippings

This machine comes from the factory ready to recycle grass and leaf clippings back into the lawn. To prepare the machine to recycle, do the following:

- If the side-discharge chute is on the machine, remove it and lower the side-discharge deflector; refer to Removing the Side-Discharge Chute (page 20).
- If the grass bag is on the machine, remove it; refer to Removing the Grass Bag (page 19).
- If the rear-discharge plug is not installed, grip it by the handle, raise the rear deflector, and insert it into the rear-discharge chute until the latch locks into place; refer to Figure 22.

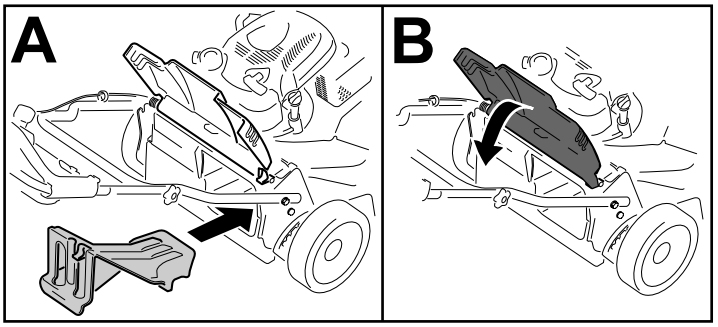

g234924

Figure 23

⚠ WARNING

Operating the machine to recycle lawn clippings without the plug in place allows objects to be thrown toward you or bystanders. Also, contact with the blades could occur. Thrown objects or blade contact can cause serious injury or death.

Ensure that the rear-discharge plug is in place before you recycle the clippings. Never engage the blades without either the rear-discharge plug or the grass bag installed on the machine.

Bagging the Clippings

Use the grass bag when you want to collect grass and leaf clippings from the lawn.

If the side-discharge chute is on the mower, remove it before bagging the clippings; refer to Removing the Side-Discharge Chute (page 20).

Installing the Grass Bag

1. Raise and hold up the rear deflector (A of Figure 24).
2. Remove the rear-discharge plug by pulling down on the latch with your thumb and pulling the plug out from the machine (B of Figure 24).
3. Install the bag rod into the notches at the base of the handle and rock the bag back and forth to ensure that the rod is seated at the bottom of both notches (C of Figure 24)
4. Lower the rear deflector until it rests on the grass bag.

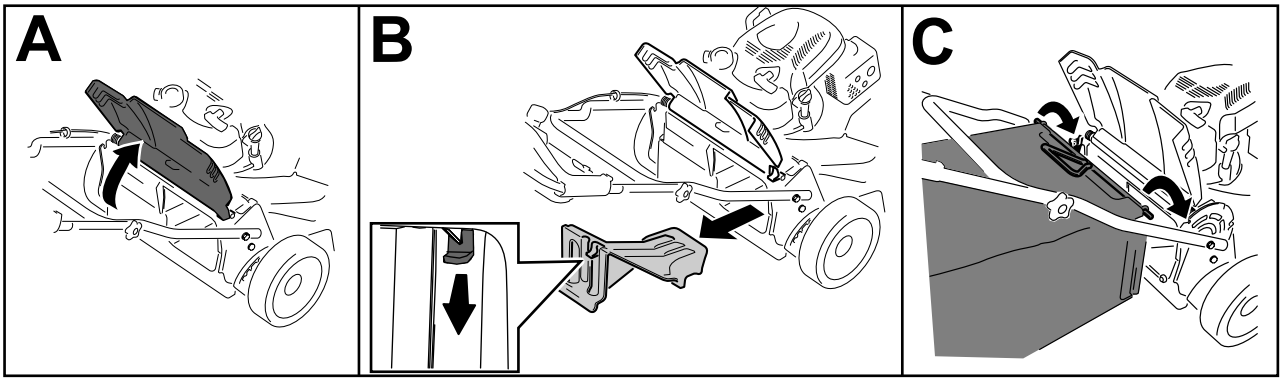

g244854

Figure 24

Removing the Grass Bag

To remove the bag, reverse the steps in Installing the Grass Bag (page 19).

Side-Discharging the Clippings

Use the side discharge for cutting very tall grass.

If the bag is on the machine, remove it and insert the rear-discharge plug; refer to Removing the Grass Bag (page 19) before side-discharging the clippings.

Important: **Ensure that the rear-discharge plug is in place before you recycle the clippings (Figure 23).**

Installing the Side-Discharge Chute

Unlatch and lift up the side deflector and install the side-discharge chute (Figure 25).

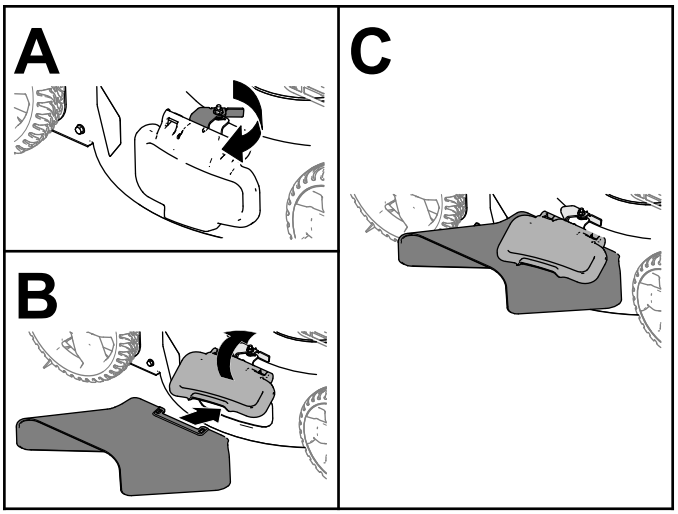

g235646

Figure 25

Removing the Side-Discharge Chute

To remove the side-discharge chute, lift up the side deflector, remove the side-discharge chute, and lower the side-discharge deflector until it latches securely.

Operating Tips

General Mowing Tips

- Inspect the area where you will use the machine and remove all objects that the machine could throw.
- Avoid striking solid objects with the blades. Never deliberately mow over any object.
- If the machine strikes an object or starts to vibrate, immediately shut off the engine, wait for all moving parts to stop, remove the key (if equipped), disconnect the wire from the spark plug, and examine the machine for damage.
- For best performance, install new Toro blades before the cutting season begins or when necessary.

Cutting Grass

- Cut only about a third of the grass blade at a time. Do not cut below 51 mm (2 inches) unless the grass is sparse or it is late fall when grass growth begins to slow down.
- When cutting grass over 15 cm (6 inches) tall, mow at the highest cutting height setting and walk slower; then mow again at a lower setting for the best lawn appearance. If the grass is too long, the machine may plug and cause the engine to stall.
- Wet grass and leaves tend to clump on the yard and can cause the machine to plug or the engine to stall. Avoid mowing in wet conditions.
- Be aware of a potential fire hazard in very dry conditions, follow all local fire warnings, and keep the machine free of dry grass and leaf debris.
- Alternate the mowing direction. This helps disperse the clippings over the lawn for even fertilization.
- If the finished lawn appearance is unsatisfactory, try 1 or more of the following:
  - Replace the blades or have them sharpened.
  - Walk at a slower pace while mowing.
  - Raise the cutting height on your machine.
  - Cut the grass more frequently.
  - Overlap cutting swaths instead of cutting a full swath with each pass.

Cutting Leaves

- After cutting the lawn, ensure that half of the lawn shows through the cut leaf cover. You may need to make more than a single pass over the leaves.
- If there are more than 13 cm (5 inches) of leaves on the lawn, mow at a higher cutting height and then again at the desired cutting height.
- Slow down your mowing speed if the machine does not cut the leaves finely enough.

After Operation

After Operation Safety

General Safety

- Always shut off the machine, remove the ignition key (if equipped), wait for all moving parts to stop, and allow the machine to cool before adjusting, servicing, cleaning, or storing it.
- Clean grass and debris from the machine to help prevent fires. Clean up oil or fuel spills.
- Never store the machine or fuel container where there is an open flame, spark, or pilot light, such as on a water heater or on other appliances.

Hauling Safety

- Remove the ignition key (if equipped) before loading the machine for hauling.
- Use care when loading or unloading the machine.
- Secure the machine from rolling.

Cleaning Under the Machine

Service Interval: After each use

1. Move the machine to a level surface.
2. Shut off the engine and wait for all moving parts to stop before leaving the operating position.
3. Lower the machine to its lowest cutting-height setting. Refer to Adjusting the Cutting Height (page 13).
4. Attach a hose to the washout fitting, and turn the water on high (Figure 26).

   Note: Spread petroleum jelly on the washout fitting O-ring to make the coupling slide on easier and protect the O-ring.

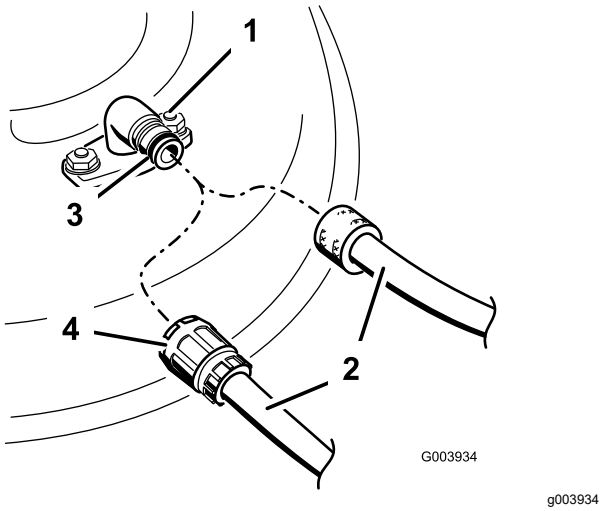

Figure 26

1. Washout fitting
2. Hose
3. O-ring
4. Coupling

5. Start the engine, engage the blade-control lever, and let the machine run for 1 to 3 minutes with the blades turning.
6. Disengage the blade-control lever, shut off the engine, and wait for all moving parts to stop.
7. Shut off the water and remove the coupling from the washout fitting.

   Note: If the machine is not clean after a single washing, soak it and let it stand for 30 minutes. Then repeat the process.
8. Run the machine again and engage the blades for 1 to 3 minutes to remove the excess water.

⚠ WARNING

A broken or missing washout fitting could expose you and others to thrown objects or blade contact. Contact with a blade or thrown debris can cause injury or death.

- **Replace a broken or missing washout fitting immediately, before using the machine again.**
- **Never put your hands or feet under the machine or through openings in the machine.**

Folding the Handle

⚠ WARNING

Folding or unfolding the handle improperly can damage the cables, causing an unsafe operating condition.

- **Do not damage the cables when folding or unfolding the handle.**
- **If a cable is damaged, contact an Authorized Service Dealer.**

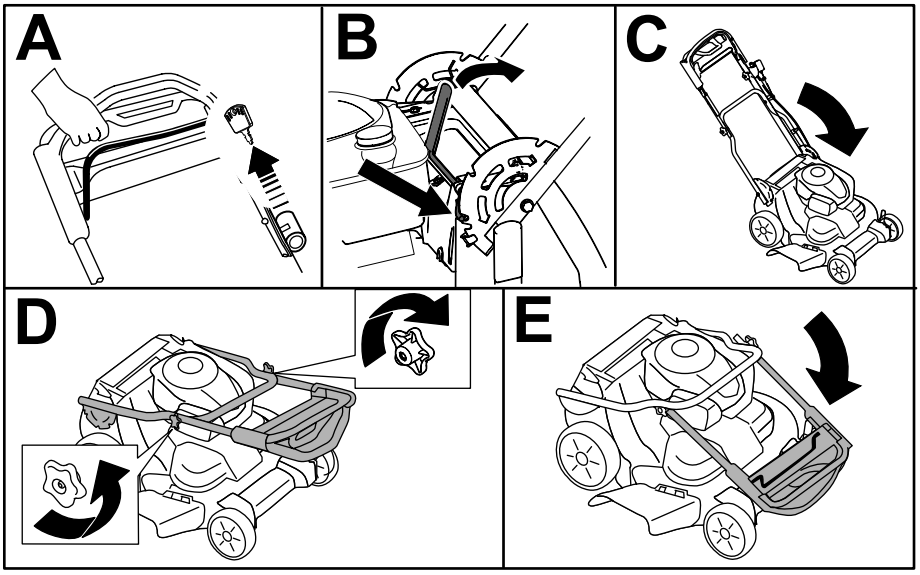

Figure 27

Maintenance

Recommended Maintenance Schedule(s)

Maintenance Service Interval	Maintenance Procedure
After the first 5 hours	• Change the engine oil.
Before each use or daily	• Check the engine-oil level and add oil as needed. • Check the blade-brake-clutch operation. • Check the air filter and clean or replace it, if necessary. • Check the cutting blades.
After each use	• Clean grass clippings and dirt from under the machine.
Every 25 hours	• Charge the battery for 24 hours (electric-start model only).
Every 50 hours	• Clean the air filter; clean it more frequently in dusty operating conditions. • Change the engine oil. • Service the blade-drive system.
Every 200 hours	• Replace the air filter; replace it more frequently in dusty operation conditions.
Yearly	• Service the air filter; service it more frequently in dusty operating conditions. • Change the engine oil. • Service the blades.
Yearly or before storage	• Charge the battery (electric-start model only). • Empty the fuel tank before repairs as directed and before yearly storage.

Important: **Refer to your engine owner's manual for additional maintenance procedures.**

Maintenance Safety

- Always shut off the machine, wait for all moving parts to stop, and allow the machine to cool before adjusting, servicing, cleaning, or storing it.
- Disconnect the spark-plug wire from the spark plug and remove the ignition key (if equipped) before performing any maintenance procedure.
- Wear gloves and eye protection when servicing the machine.
- The blade is sharp; contacting the blade can result in serious personal injury. Wear gloves when servicing the blade. Do not repair or alter the blade(s).
- Never tamper with safety devices. Check their proper operation regularly.
- Tipping the machine may cause the fuel to leak. Fuel is flammable and explosive, and can cause personal injury. Run the engine dry or remove the fuel with a hand pump; never siphon the fuel.
- To ensure optimum performance of the machine, use only genuine Toro replacement parts and accessories. Replacement parts and accessories made by other manufacturers could be dangerous, and such use could void the product warranty.

Preparing for Maintenance

1. Shut off the engine, remove the ignition key (if equipped), and wait for all moving parts to stop.
2. Disconnect the spark-plug wire from the spark plug (Figure 28).

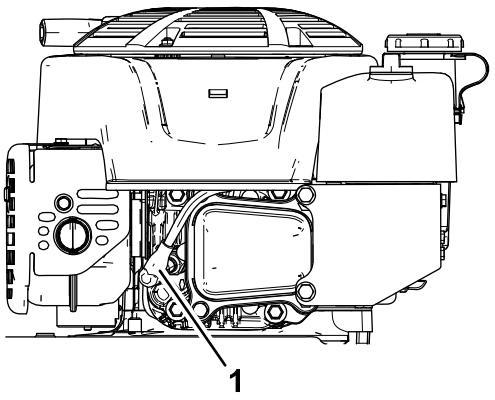

g191983

Figure 28

1. Spark-plug wire

3. After performing the maintenance procedure(s), connect the spark-plug wire to the spark plug.

   Important: **Before tipping the machine to change the oil or replace the blades, allow**

the fuel tank to run dry through normal usage. If you must tip the machine prior to running out of fuel, use a hand fuel pump to remove the fuel. Always tip the machine onto its side, with the dipstick down.

⚠ WARNING

Tipping the machine may cause the fuel to leak. Fuel is flammable, explosive, and can cause personal injury.

Run the engine dry or remove the fuel with a hand pump; never siphon.

Servicing the Air Filter

Service Interval: Before each use or daily—Check the air filter and clean or replace it, if necessary.

Every 50 hours—Clean the air filter; clean it more frequently in dusty operating conditions.

Yearly—Service the air filter; service it more frequently in dusty operating conditions.

Every 200 hours—Replace the air filter; replace it more frequently in dusty operation conditions.

1. Loosen the fastener and remove the air-filter cover (Figure 29).

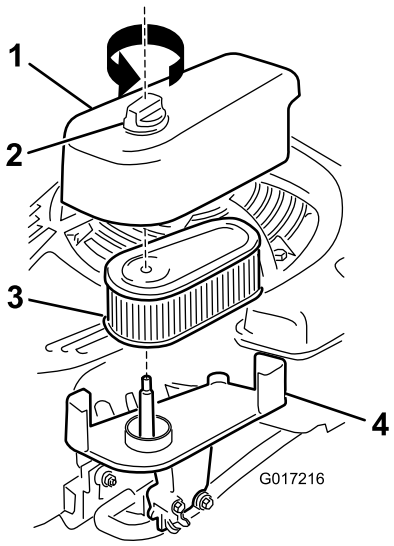

g017216

Figure 29

1. Cover
2. Fastener
3. Filter
4. Base

2. Remove and inspect the filter.
   - If the filter is damaged or is wet with oil or fuel, replace it.
   - If the filter is dirty, tap it on a hard surface several times or blow the debris outward from the interior of the filter using compressed air at less than 207 kPa (30 psi).

     Note: Do not brush or blow dirt from the outside of the filter; either forces dirt into the fibers.
3. Clean the air-filter body and cover using a damp rag. **Keep dirt away from the air opening.**
4. Install the filter onto the base.
5. Install the cover and screw the fastener down securely.

Changing the Engine Oil

Service Interval: After the first 5 hours

Every 50 hours

Yearly

Note: Run the engine a few minutes before changing the oil to warm it. Warm oil flows better and carries more contaminants.

Engine Oil Specifications

Engine oil capacity	0.53 L (18 fl oz)*
Oil viscosity	SAE 30 or SAE 10W-30 detergent oil
API service classification	SJ or higher

*There is residual oil in the crankcase after you drain the oil. Do not pour the entire capacity of oil into the crankcase. Fill the crankcase with oil as directed in the following steps.

1. Move the machine to a level surface.
2. Refer to Preparing for Maintenance (page 22).
3. Remove the dipstick by rotating the cap counterclockwise and pulling it out (Figure 30).

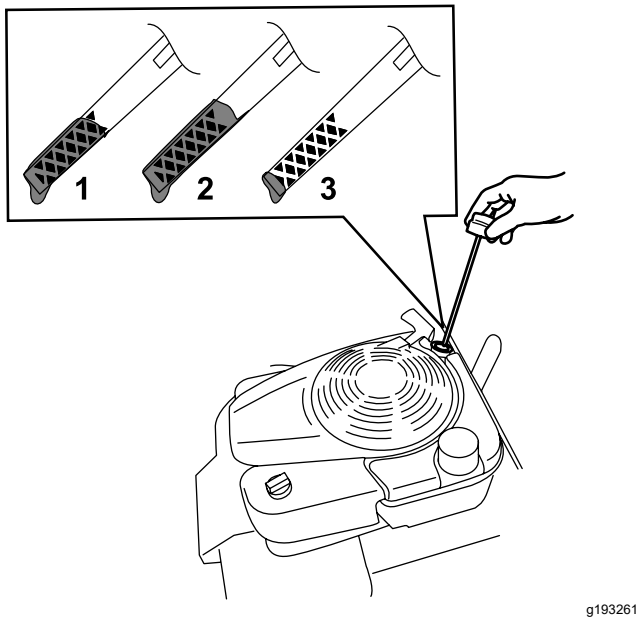

Figure 30

1. Full
2. High
3. Low

4. Tip the machine onto its side (so that the air filter is up) to drain the used oil from the oil-fill tube (Figure 31).

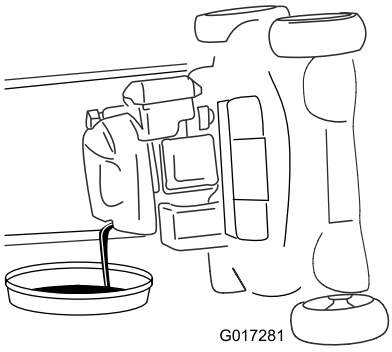

Figure 31

5. After draining the used oil, return the machine to the operating position.
6. Carefully pour about 3/4 of the engine capacity of oil into the oil-fill tube.
7. Wait 3 minutes for the oil to settle in the engine.
8. Wipe the dipstick clean with a clean cloth.
9. Insert the dipstick into the oil-fill tube, then remove the dipstick.
10. Read the oil level on the dipstick (Figure 30).
    - If the oil level on the dipstick is too low, carefully pour a small amount of oil into the oil-fill tube, wait 3 minutes, and repeat steps 8 through 10 until the oil level on the dipstick is correct.
    - If the oil level on the dipstick is too high, drain the excess oil until the oil level on the dipstick is correct.
11. Install the dipstick into the oil-fill tube securely.
12. Recycle the used oil properly.

Charging the Battery

Electric-Start Model Only

Service Interval: Every 25 hours

Yearly or before storage

Charge the battery for 24 hours initially, then monthly (every 25 starts) or as needed. Always use the charger in a sheltered area, and charge the battery at room temperature (about 22°C or 70°F) whenever possible.

Note: The machine is not equipped with an alternator charging system.

1. Connect the charger to the wire harness located below the ignition key (Figure 32).

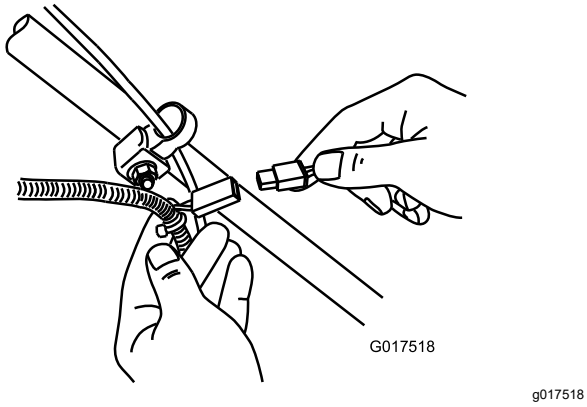

Figure 32

2. Plug the charger into a wall outlet.

   Note: When the battery no longer holds a charge, recycle or dispose of the lead-acid battery according to local codes.

Note: Your battery charger may have a 2-color LED display that indicates the following states of charging:

- A red light indicates that the charger is charging the battery.
- A green light indicates that the charger is fully charged or is disconnected from the battery.
- A flashing light that alternates between red and green indicates that the battery is nearly fully charged. This state lasts only a few minutes until the battery is fully charged.

Replacing the Fuse

Electric-Start Model Only

If the battery does not charge or the engine does not run with the electric starter, the fuse may be blown. Replace it with a 40 A plug-in type fuse.

Important: **You cannot start the machine with the electric starter or charge the battery unless a working fuse is installed.**

1. Open the sealed fuse holder and replace the fuse (Figure 33).

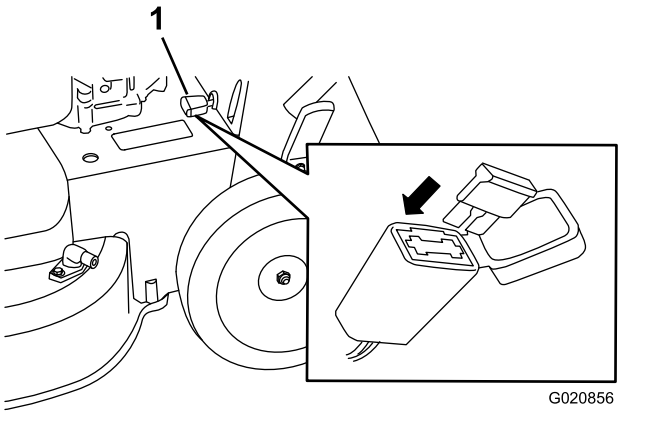

Figure 33

1. Fuse holder

2. Close the cover to the fuse holder, and ensure that it is sealed tightly.

Replacing the Battery

Electric-start model only

Removing the Old Battery

1. Contact an Authorized Service Dealer to obtain a replacement battery.
2. Remove the belt cover; refer to step 1 of Servicing the Blade-Drive System (page 27).
3. Remove the rear-discharge plug.
4. Move the handle to the vertical position.
5. Remove the 4 small bolts that hold the rear deflector and handle-lock-lever assembly in place.
6. Fold the handle all the way forward.
7. Remove the rear deflector and handle-lock lever assembly (Figure 34).

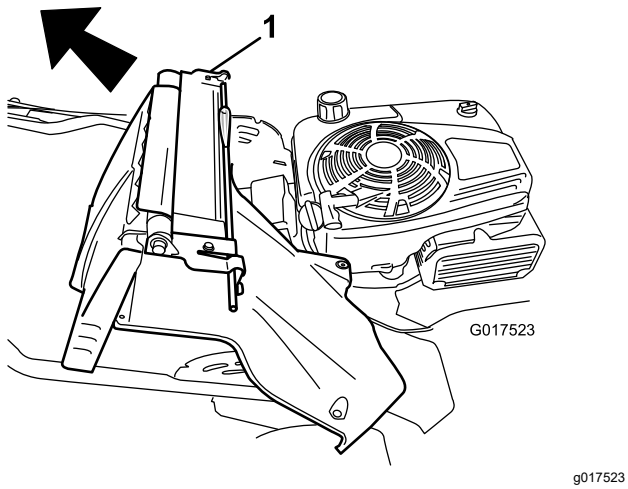

Figure 34

1. Rear deflector and handle-lock-lever assembly

8. Remove the cover from the battery.
9. Disconnect the leads from the battery.
10. Remove the battery and recycle it.

    Note: Recycle the battery according to your state and local regulations.

Installing the New Battery

1. Clean the battery-holding area on the machine housing.
2. Set the new battery in place on the machine housing.
3. Connect the leads to the new battery.

    Note: Ensure that you connect the black (negative) wire to the negative (-) terminal and the red (positive) wire to the positive (+) terminal.
4. Install the cover onto the battery.

    Note: Ensure that the cover fits properly over the wire harness.
5. Install the rear deflector and handle-lock-lever assembly onto the machine.
6. Raise the handle to the vertical position.
7. Secure the shroud with the 4 small bolts that you removed in step 5 of Removing the Old Battery (page 25).
8. Install the rear-discharge plug.
9. Return the handle to the operating position.

Adjusting the Self-Propel Drive

For Self-Propel-Drive Models Only

Whenever you install a new self-propel cable or if the self-propel drive is out of adjustment, adjust the self-propel drive.

1. Turn the adjustment nut counterclockwise to loosen the cable adjustment (Figure 35).

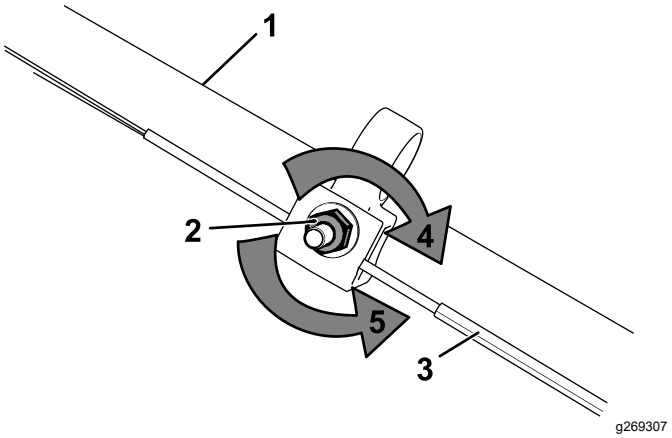

Figure 35

1. Handle (left side)
2. Adjustment nut
3. Self-propel-drive cable
4. Turn the nut clockwise to tighten the adjustment.
5. Turn the nut counterclockwise to loosen the adjustment.

2. Adjust the tension on the cable (Figure 35) by pulling it back or pushing it forward and holding that position.

    Note: Push the cable toward the engine to increase the traction; pull the cable away from the engine to decrease the traction.
3. Turn the adjustment nut clockwise to tighten the cable adjustment.

    Note: Tighten the nut firmly with a socket or wrench.

Servicing the Blade-Drive System

Service Interval: Every 50 hours

1. Loosen the 2 quarter-turn fasteners on the belt-cover-access panel and remove the panel (Figure 36).

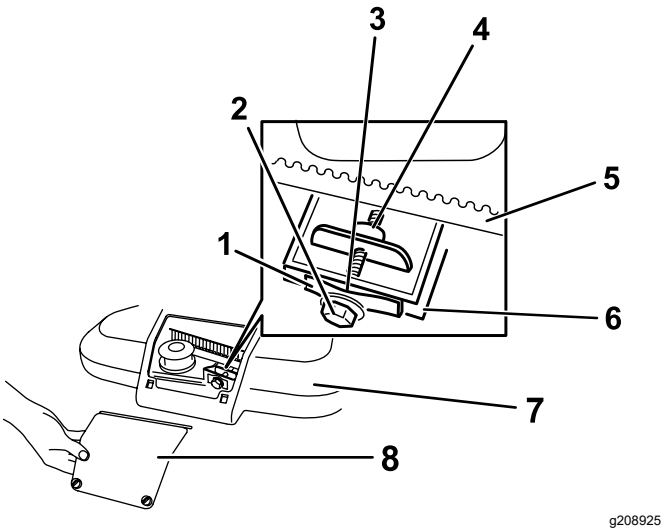

Figure 36

1. Belt-tension spring
2. Adjusting bolt
3. Gap
4. Adjusting nut
5. Blade-drive belt
6. Wall
7. Belt cover
8. Belt-cover-access panel

2. Brush or blow out debris from the inside of the shield and around all the parts.
3. Hold a 0.25 mm (0.010 inch) feeler gauge, a piece of paper, or a note card against the wall and slide it down behind the belt tension spring.

   Note: If there is a visible gap between the gauge and the spring, tighten the adjusting bolt and the nut until the paper barely slides freely in and out of the gap (Figure 36).

   Important: **Do not overtighten the adjusting bolt. This could damage the blade-drive belt.**
4. Install the belt-cover-access panel.

Servicing the Blades

Service Interval: Yearly

Important: ***You will need a torque wrench to install the blades properly.*** **If you do not have a torque wrench or are uncomfortable performing this procedure, contact an Authorized Service Dealer.**

Examine the blades whenever you run out of fuel. If the blades are damaged or cracked, replace them immediately. If the blade edges are dull or nicked, have them sharpened and balanced, or replace them.

Important: **Always wear padded gloves when working with the blade.**

⚠ WARNING

A worn or damaged blade can break, and a piece of the blade could be thrown toward you or bystanders, resulting in serious personal injury.

- **Inspect the blades periodically for wear or damage.**
- **Replace a worn or damaged blade.**

Note: Maintain sharp blades throughout the cutting season, because sharp blades cut cleanly without tearing or shredding the grass blades.

Preparing to Service the Cutting Blades

1. Lock the handle in the vertical position (Figure 37); refer to Adjusting the Handle Height (page 12).

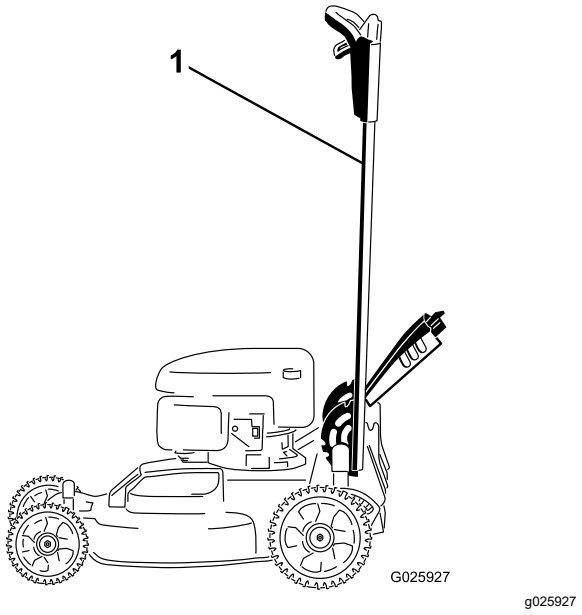

Figure 37

1. Handle locked in the vertical position

2. Tip the machine onto its side, with the dipstick down, until the upper handle rests on the ground.

Inspecting the Blades

Service Interval: Before each use or daily

1. Inspect the cutting edges (Figure 38). If the edges are not sharp or have nicks, remove the

blades and have them sharpened or replace them.

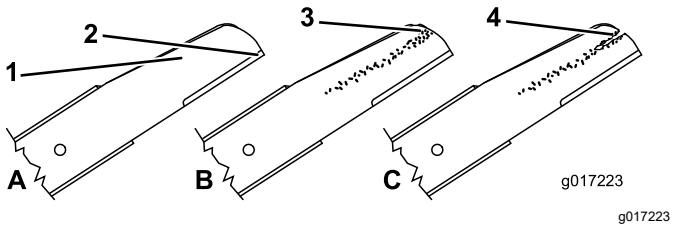

Figure 38

1. Cutting edge
2. Curved area
3. Wear/slot forming
4. Crack

2. Inspect the blades themselves, especially the curved area (Figure 38). If you notice any damage, wear, or a slot forming in this area, immediately replace it with a new blade.

⚠ WARNING

If you allow a blade to wear, a slot will form between the sail and flat part of the blade. Eventually a piece of the blade may break off and be thrown from under the housing, possibly resulting in serious injury to you or bystanders.

- **Inspect the blade periodically for wear or damage.**
- **Never try to straighten a blade that is bent or weld a broken or cracked blade.**
- **Replace a worn or damaged blade.**

3. Check for bent blades; refer to Checking for Bent Blades (page 28).

Checking for Bent Blades

1. Rotate the blades to the position shown in Figure 39.

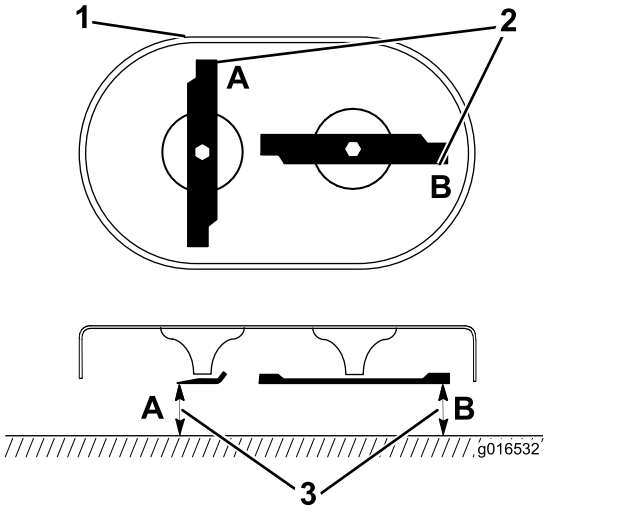

Figure 39

1. Front of cutting deck
2. Measure at locations A and B
3. Measure from the cutting edge to a smooth, level surface

2. Measure from a level surface to the cutting edges at locations **A** and **B** (Figure 39), and record both dimensions.
3. Rotate the blades so that their opposite ends are at locations **A** and **B** (Figure 39).
4. Repeat the measurements in step 2 and record them.

Note: If the difference between the dimensions **A** and **B** obtained in steps 2 and 4 exceeds 3 mm (1/8 inch), the blade is bent and you will need to replace it. Refer to Removing the Blades (page 29) and Installing the Blades (page 29).

⚠ WARNING

A blade that is bent or damaged could break apart and could seriously injure or kill you or bystanders.

- **Always replace a bent or damaged blade with a new blade.**
- **Never file or create sharp notches in the edges or surfaces of a blade.**

Removing the Blades

Replace the blades when the machine hits a solid object or when a blade is out of balance or bent. Use only genuine Toro replacement blades.

1. Use a block of wood to hold each blade steady and turn the blade bolt counterclockwise as shown in Figure 40.

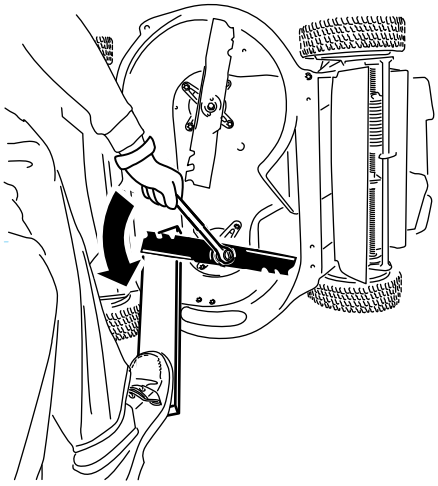

g232790

Figure 40

2. Remove each blade as shown in Figure 41.

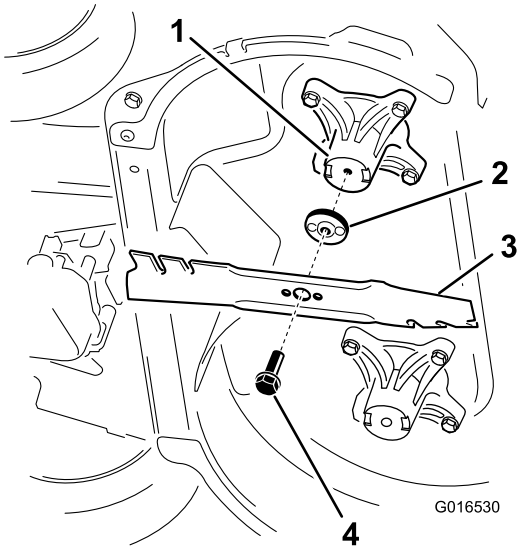

g016530

Figure 41

1. Spindle (2)
2. Blade driver (2)
3. Blade (2)
4. Blade bolt (2)

3. Inspect the pins on the blade drivers for wear and damage.

Installing the Blades

1. Install the first blade so that it is horizontal, along with all mounting hardware as shown in Figure 41.

   Note: Tighten the bolt with your fingers.

   Important: **Position the curved ends of the blades to point toward the machine housing. Be sure to nest the raised areas on each blade driver with the recesses in the head of its corresponding spindle, and the pins on the other side of each blade driver with the holes in its corresponding blade.**

2. Steady each blade with a board and turn the blade bolt clockwise with a torque wrench as shown in Figure 42; torque the blade bolt to 82 N·m (60 ft-lb).

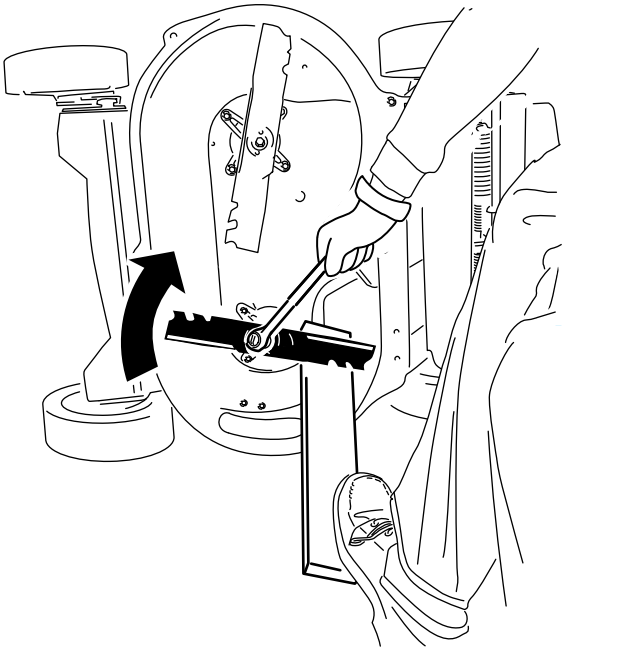

g232801

Figure 42

3. Rotate the installed blade 1/4 turn until it is vertical, and install the other blade in the same manner as the first (refer to step 1).

   Note: The blades should be perpendicular, forming an inverted “T” as shown in Figure 43.

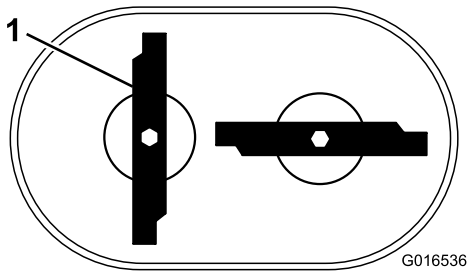

g016536

Figure 43

1. Blade (2)

4. Tighten the second blade; refer to step 2.
5. Rotate the blades by hand a full 360° turn to ensure that they do not touch.

   Note: If the blades touch each other, they are not mounted correctly. Repeat steps 1 through 3, until the blades no longer touch each other.

⚠ WARNING

Incorrectly installing the blades could damage the machine or cause an injury to you or bystanders.

Use care when installing the blades.

Storage

Store the machine in a cool, clean, dry place.

Storage Safety

Always shut off the machine, remove the ignition key (if equipped), wait for all moving parts to stop, and allow the machine to cool before adjusting, servicing, cleaning, or storing it.

General Information

1. Perform the recommended annual maintenance procedures; refer to Maintenance (page 22).
2. Clean under the machine housing; refer to Cleaning Under the Machine (page 20).
3. Remove chaff, dirt, and grime from the external parts of the engine, the shrouding, and the top of the machine.
4. Check the condition of the blades; refer to Inspecting the Blades (page 27).
5. Service the air filter; refer to Servicing the Air Filter (page 23).
6. Tighten all nuts, bolts, and screws.
7. Touch up all rusted or chipped paint surfaces with paint available from an Authorized Service Dealer.
8. **Electric-start model only:** Charge the battery for 24 hours, then unplug the battery charger and store the machine in an unheated area. If you must store the machine in a heated area, you must charge the battery every 90 days. Remove the key.
9. Fold the handle for storage; refer to Folding the Handle (page 21).

Preparing the Fuel System

⚠ WARNING

Fuel can vaporize if you store it over long periods of time and explode if it comes into contact with an open flame.

- **Do not store fuel over long periods of time.**
- **Do not store the machine with fuel in the fuel tank or the carburetor in an enclosure with an open flame. (For example, a furnace or a water heater pilot light.)**
- **Allow the engine to cool before storing it in any enclosure.**

On the last refueling of the year, add fuel stabilizer to the fuel as directed by the engine manufacturer. Empty the fuel tank when mowing the last time before storing the machine.

1. Run the machine until the engine shuts off from running out of fuel.
2. Start the engine again and allow it to run until it shuts off. When you can no longer start the engine, it is sufficiently dry.

Preparing the Engine

1. While the engine is still warm, change the engine oil; refer to Changing the Engine Oil (page 23).
2. Disconnect the wire from the spark plug and remove the ignition key (electric-start model only).
3. Remove the spark plug.
4. Using an oil can, add about 30 ml (1 fl oz), of motor oil to the engine through the spark-plug hole.
5. Slowly pull the starter rope several times to distribute oil throughout the cylinder.
6. Install the spark plug but do not connect the wire to the spark plug. Secure the wire so that it does not come into contact with the spark plug.

Removing the Machine from Storage

1. Unfold the handle; refer to 1 Assembling and Unfolding the Handle (page 5).
2. Check and tighten all fasteners.
3. Remove the spark plug and spin the engine rapidly using the starter to blow excess oil from the cylinder.
4. Inspect the spark plug and replace it if it is dirty, worn, or cracked; refer to the engine owner's manual.
5. Install the spark plug and tighten it to the recommended torque of 20 N·m (15 ft-lb).
6. Perform any needed maintenance procedures; refer to Maintenance (page 22).
7. Check the engine-oil level; refer to Checking the Engine-Oil Level (page 12).
8. Fill the fuel tank with fresh fuel; refer to Filling the Fuel Tank (page 11).
9. **Electric-start model only:** Charge the battery; refer to 5 Charging the Battery (page 8).
10. Connect the wire to the spark plug.



Count on it.