Form No. 3350–211

Electric Starter Kit

Proline Mid–Size Mowers

Part No. 104–8580

Installation Instructions

This kit can be installed on both Pistol Grip and T–Bar machines. Follow the instructions that pertain to your type of machine.

Important This kit can be installed on both **13hp and 15hp Kohler® engines only.**

Loose Parts

Note: Use the chart below to identify parts for assembly.

Step	Description	Qty.	Use
1	No parts needed	–	Removing the existing wire harness from T–bar machines
2	No parts needed	–	Removing the existing wire harness from pistol grip machines
3	Starter Screw, 3/8 x 3–1/2 inch Solenoid cable	1 2 1	Installing the starter motor
4	Ignition switch, Pistol Grip Ignition switch, T–Bar Decal, Pistol Grip Decal, T–Bar Nut Lock washer Key	1 1 1 1 1 1 1	Installing the ignition switch
5	Voltage regulator	1	Installing the voltage regulator
6	Solenoid Screw	1 2	Installing the solenoid
7	Neutral switch Tapping screw Mounting bracket, T–Bar Hydro only Screw, 1/4 x 1/2 inch, T–Bar Hydro only Jumper wire Switch plate Transmission switch, Pistol Grip Gear only	2 4 2 4 2 2 1	Installing the neutral switches

© 2003 by The Toro Company
8111 Lyndale Avenue South
Bloomington, MN 55420-1196

Contact us at www.Toro.com
All Rights Reserved
Printed in the USA

Step	Description	Qty.	Use
8	Anti skid pad	1	Installing the battery holder
	Battery plate	1	
	Screw, 1/2 x 1–3/4 inch	2	
	Nut, 1/2 inch	2	
9	Screw	1	Installing the t–bar wire harness
	T–Bar Wire Harness	1	
	Relay	1	
	Tie strap	3	
10	Screw	1	Installing the pistol grip wire harness
	Pistol Grip Wire Harness	1	
	Relay	1	
	Tie strap	3	
11	Nut, 1/4 inch	2	Installing battery
	Battery holdown	1	
	Battery holdown plate	3	
	Nut, 5/16 inch	2	
	Battery cable, black	1	
	Terminal boot, red	1	
	Terminal boot, black	1	
	Locknut, 1/4 inch	2	
	Screw, 5/16 x 3/4 inch	2	
	Battery cable, red	1	
	Battery	1	Obtain from Dealer

Step 1

Removing the Existing Wire Harness from T–Bar Machines

The following instructions are for **T–bar machines only**.

1. Disconnect the wire harness from the clutch and the engine connectors. Remove the ground wire that is attached to the engine.
2. Remove the bottom plate of the control panel.
3. Remove the screw and nut securing the relay socket to the bottom of the control panel and remove the socket.
4. Unplug the connectors from the interlock module located on the control panel.
5. Unplug the wire harness connectors from the ignition switch, clutch switch, hour meter (if equipped) and the control bail switch.
6. Remove the cable ties securing the harness to the handle and remove the harness.
7. Remove the nut and lock washer securing the ignition switch to the control panel and remove the switch from the panel (Fig. 3).
8. Remove the terminals from the upper T–Bar switch (Figures 21 and 22).

Step 2

Removing the Existing Wire Harness from Pistol Grip Machines

The following instructions are for **pistol grip machines only.**

1. Disconnect the wire harness from the clutch and engine connectors. Remove the ground wire that is attached to the engine.
2. Remove the bottom plate of the control panel.
3. Remove the screw and nut securing the relay socket to the control panel and remove the socket.
4. Unplug the connectors from the interlock module secured to the bottom of the control panel.
5. Unplug the wire harness connectors from the ignition switch, clutch switch, neutral switch and the hour meter if one is installed.
6. Remove the r–clamp and cable ties securing the harness to the control panel and remove the harness.
7. Remove the nut and lock washer securing the ignition switch to the control panel and remove the switch from the panel (Fig. 3).

Step 3

Installing the Starter Motor

Parts needed for this step:

Qty.	Part
1	Starter
2	Bolt, 3/8 x 3–1/2 inch
1	Solenoid cable

Procedure

1. Install the red battery cable to the bottom of the starter motor (Fig. 1).
2. Remove the 2 screws securing starter cover to right side of engine. Retain the screws but discard the cover (Fig. 1).
3. Mount the starter motor to the engine with 2 flange head bolts (3/8 x 3–1/2 inch) (Fig. 1).
4. Install the new starter cover to the engine with 2 screws previously removed (Fig. 1).

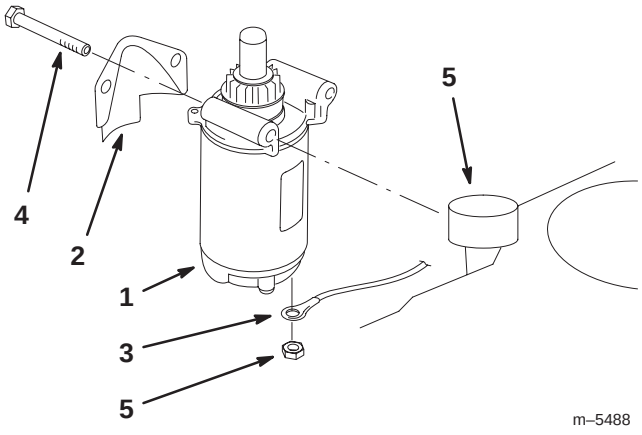

Figure 1

1. Starter motor
2. New starter cover
3. Red battery cable from solenoid
4. Flange head bolt, (3/8 x 3–1/2 inch)
5. Nut
6. Oil filler tube

Step 4

Installing Ignition Switch and Decal

Parts needed for this step:

Qty.	Part
1	Ignition switch, Pistol Grip
1	Ignition switch, T–Bar
1	Decal
1	Nut
1	Lock washer
1	Key

Procedure

Note: There are two different types of ignition switches. One is for the Pistol Grip machines and one is for the T–Bar machines. Use the one that pertains to your machine. Refer to figure 2.

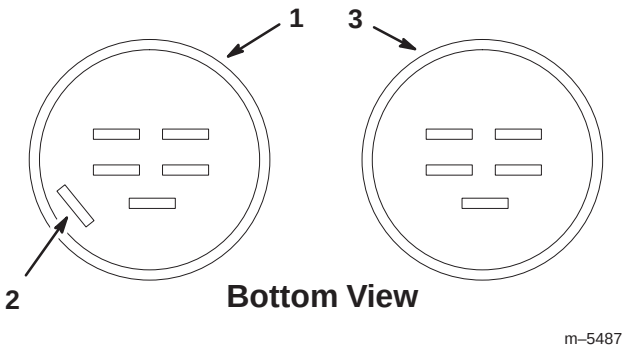

Figure 2

1. Ignition switch, Pistol Grip
2. Extra terminal, Pistol Grip
3. Ignition switch, T–Bar

1. Install the new control panel decal over the ignition switch area, making sure the holes are aligned.

2. Install the new ignition switch to the control panel with the lock washer and hex nut (Fig. 3).

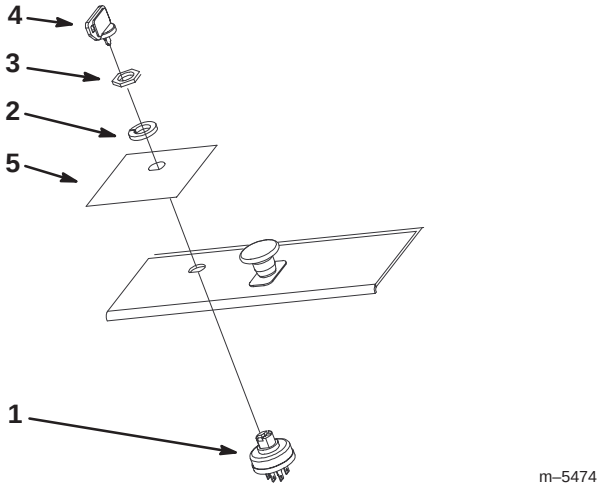

Figure 3

1. Ignition switch
2. Lock washer
3. Nut
4. Key
5. Decal

Step
5

Installing the Voltage Regulator

Parts needed for this step:

Qty.	Part
1	Voltage regulator

Procedure

Note: Make note of how the existing voltage regulator is installed. The new voltage regulator must be install the same way.

1. Remove the wire connector from the voltage regulator.

2. Remove the existing voltage regulator from the engine as shown in figure 4. Save the mounting hardware.

3. Install the new voltage regulator to the engine with existing hardware. Refer to figure 4.

4. Install the wire connector onto the new voltage regulator (Fig. 4).

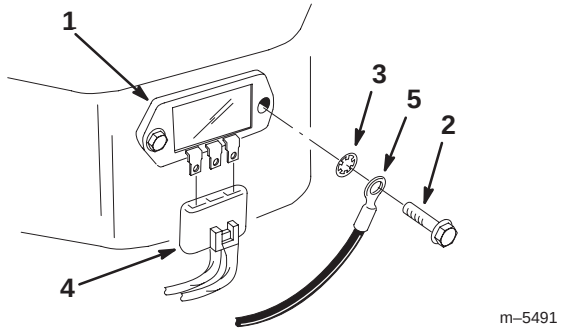

Figure 4

1. Voltage regulator
2. Bolt
3. Lock washer
4. Wire connector
5. Ground wire

Step
6

Installing the Solenoid

Parts needed for this step:

Qty.	Part
1	Solenoid
2	Bolt

Procedure

1. Install the solenoid to the engine deck with 2 bolts as shown in figure 5.

Note: Use the existing holes in the engine deck.

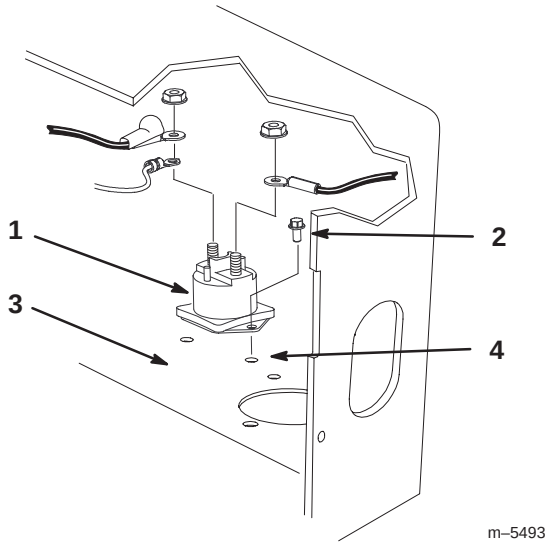

Figure 5

1. Solenoid
2. Bolt
3. Engine deck
4. Existing holes

Step
7

Installing the Neutral Switches for T–Bar Machines

Parts needed for this step:

Qty.	Part
2	Neutral switch
4	Tapping screw
2	Mounting bracket, T–Bar Hydro only
4	Bolt, 1/4 x 1/2 inch, T–Bar Hydro only
2	Jumper wire
2	Switch plate
1	Transmission switch, Pistol Grip Gear only

T–bar Hydro Drive Machines

Note: The following instructions are for **T–bar hydro machines only.**

Important Use the two neutral switches for hydro machines.

1. Install the neutral switches to the mounting brackets. Use 4 tapping screws (10–24 x 1/2 in.) (Fig. 6).
2. Install the mounting brackets and the switches to the inside of the machine frame using 4 bolts (1/4 x 1/2 inch) (Fig. 6).

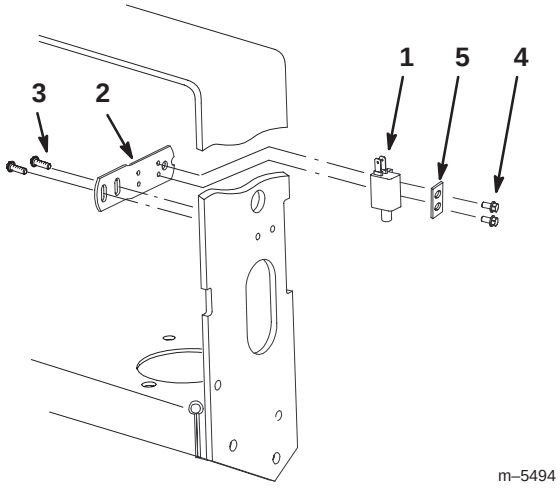

Figure 6

1. Neutral switch
2. Mounting bracket
3. Tapping screw, 10–24 x 1/2
4. Bolt, 1/4x 1/2 inch
5. Switch plate

T–bar Gear Drive Machines

Note: The following instructions are for **T–bar gear machines only.**

Important No neutral switches are added to the gear drive machines.

1. Install the jumper wires into both neutral switch connectors (Figures 7 and 15).

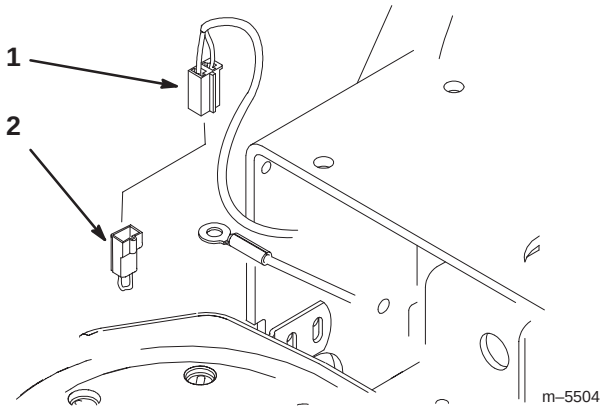

Figure 7

1. Neutral switch connector
2. Jumper wire, right side shown

Installing the Neutral Switches for Pistol Grip Machines

Pistol Grip Gear Drive Machines

Note: The following instructions are for **pistol grip gear drive machines only.**

Important One Operator Presence Control (OPC) switch and one transmission switch are replaced on gear drive machines.

1. Remove the existing neutral switch under the control panel (Fig. 8).
2. Install the the Operator Presence Control (OPC) switch and switch plate to the mounting bracket under the control panel (Fig. 8). Use 2 tapping screws (10–24 x 1/2 in.) (Fig. 8).

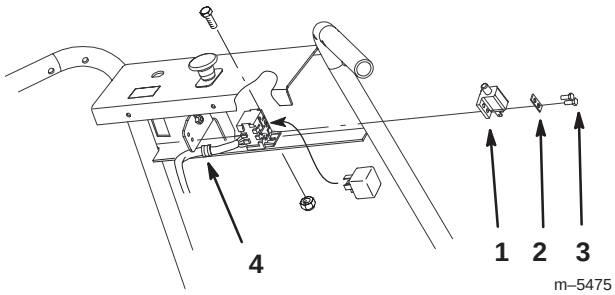

Figure 8

1. Operator Presence Control (OPC) switch
2. Switch plate
3. Tapping screw, 10–24 x 1/2
4. R–clamp

3. Remove the existing transmission switch (Figures 9 and 24).
4. Install new transmission switch into transmission (Figures 9 and 24).

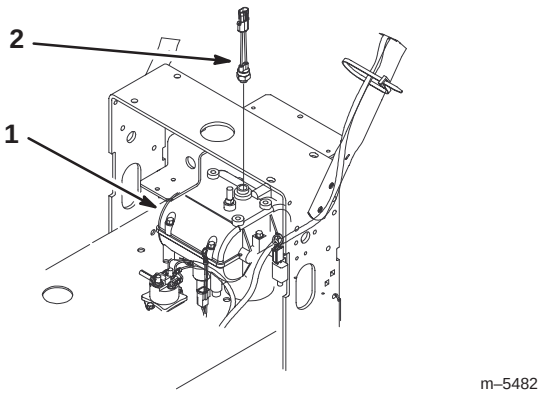

Figure 9

1. Transmission
2. Transmission Switch

5. Remove the cap off of the transmission switch harness connector, when installing the harness (Figures 10 and 24).

Note: Do not remove the shrink wrap around the neutral switch connector for **pistol grip hydro drive machines only** (Fig. 10).

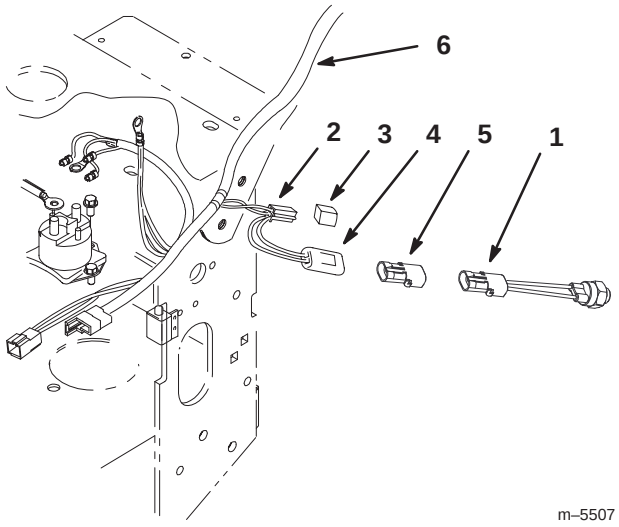

Figure 10

1. Transmission switch
2. Neutral switch connector
3. Shrink wrap
4. Transmission switch connector
5. Transmission connector cap
6. Wire harness

Pistol Grip Hydro Drive Machines

Note: The following instructions are for **pistol grip hydro machines only**.

Important One neutral switch and one Operator Presence Control (OPC) switch are replaced on hydro machines only.

1. Remove the existing neutral switch under the control panel (Fig. 8).
2. Install the the Operator Presence Control (OPC) switch and the switch plate to the mounting bracket under the control panel (Fig. 8). Use 2 tapping screws (10–24 x 1/2 in.) (Fig. 8).
3. Remove the existing neutral switch and then install a grey neutral switch to the left side of frame (Fig. 11).
4. Pull the speed control lever back to neutral.
5. Check to make sure the neutral switch is depressed and there is a 5/16 inch (8 mm) space between the actuating tab and the switch (Fig. 11).
6. If needed, adjust the switch location to create the 5/16 in. (8 mm) space (Fig. 11).

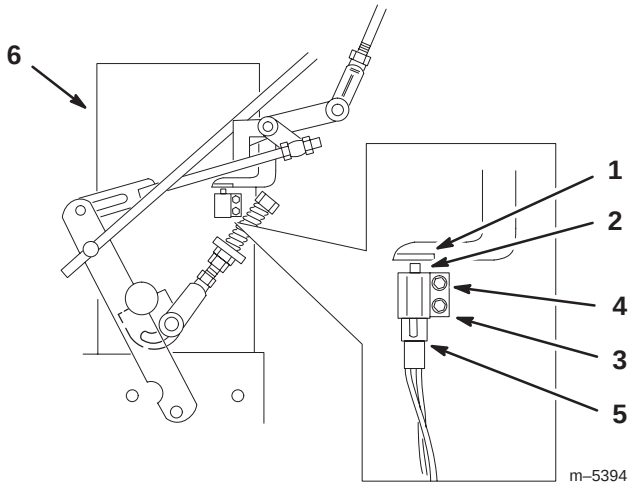

Figure 11

1. Actuating tab
2. 5/16 inch (8 mm) space
3. Neutral switch
4. Screw
5. Neutral switch connector, from wire harness
6. Left side of machine

7. Remove the shrink wrap off the neutral switch connector (Figures 10 and 24).

Note: Keep the cap on the transmission switch connector for **pistol grip gear drive machines only** (Fig. 10).

Step 8

Installing the Battery Holder

Parts needed for this step:

Qty.	Part
1	Anti skid pad
1	Battery plate
4	Bolt, 1/2 x 1–3/4 inch
4	Nut, 1/2 inch

Installing the Battery Holder on All Mowers (Excluding 2002 and Earlier Pistol Grip Gear Drive Mowers)

1. Remove left drive tire.

2. Mount battery holder to the left side of machine with 2 bolts (1/2 x 1–3/4 inch) and 2 nuts (1/2 inch).

3. Peel off backing from battery pad and affix pad to battery holder (Fig 12). Rubber battery pad should be centered on battery holder.

4. Install the left tire.

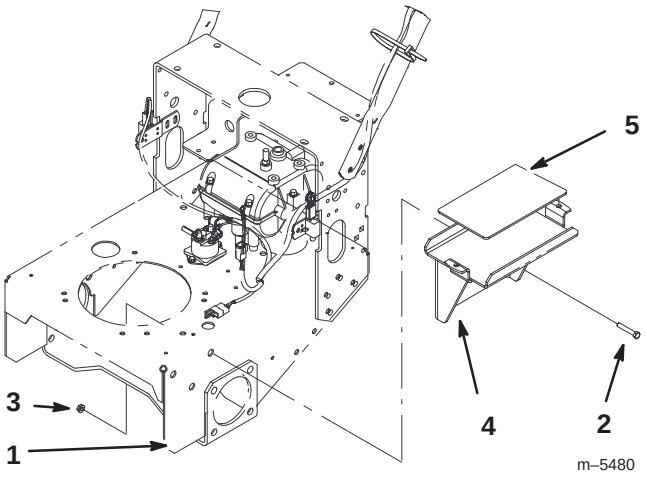

Figure 12

1. Left side of machine
2. Bolt, 3/8 x 1–3/4 inch
3. Nut, 1/2 inch
4. Battery holder
5. Battery pad

Installing the Battery Holder on Gear Drive Pistol Grip Mowers

Important The following instructions are for **2002 and earlier** Gear Drive Pistol Grip Mid–Size Mowers only.

1. Remove the left drive tire.
2. Remove the front carrier frame mounting bolt.
3. Align the battery holder so the back hole is aligned with the carrier frame hole (Fig. 13 and 14).
4. Using the battery holder as a template, mark and drill a 17/32 inch hole (Fig. 13).

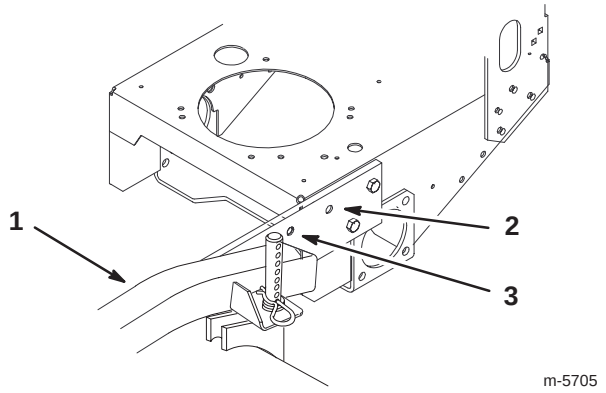

Figure 13

1. Carrier frame
2. Carrier frame hole
3. Drill a 17/32 inch hole

5. Mount battery holder to the left side of machine with 2 bolts (1/2 x 1–3/4 inch) and 2 nuts (1/2 inch) (Fig 14).
6. Peel off the backing from battery pad and affix the pad to the battery holder (Fig 14). The rubber battery pad should be centered on battery holder.

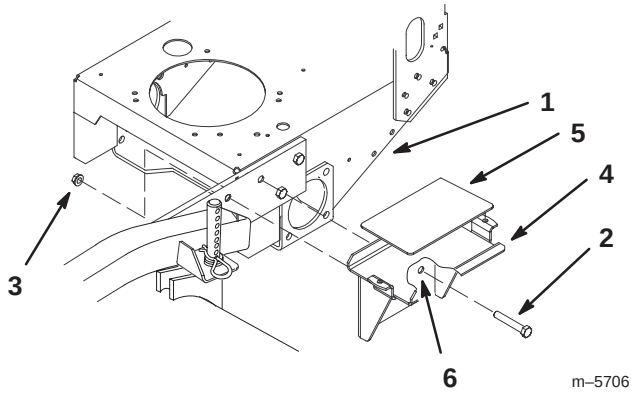

Figure 14

1. Left side of machine
2. Bolt, 1/2 x 1–3/4 inch
3. Nut, 1/2 inch
4. Battery holder
5. Battery pad
6. Back hole of holder

7. Install the left tire.

Step
9

Installing the Wire Harness for T–Bar Machines

Note: The following instructions are for **T–Bar machines only.**

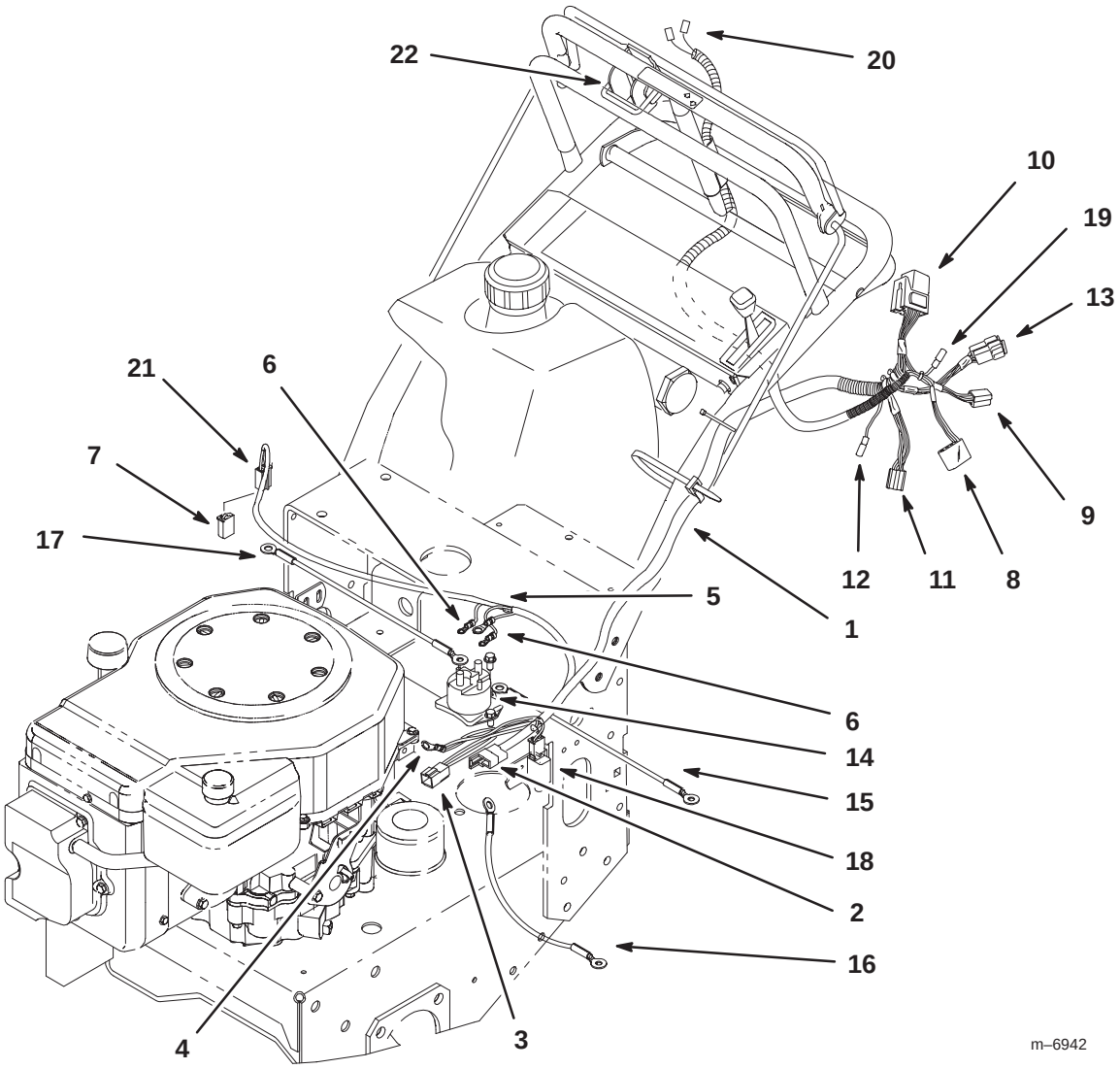

Figure 15

1. Wire harness
2. Clutch connector
3. Engine connector
4. Negative ground terminal
5. B+ wire lead
6. Solenoid bullet terminal
7. Jumper wire, T–bar gear drive machines only
8. PTO switch connector
9. Module connector
10. Relay socket
11. Ignition switch connector
12. Single module connector
13. Fuses
14. Solenoid
15. Positive Battery Cable
16. Negative Battery Cable
17. Positive Starter Cable
18. Neutral Switch
19. Hour Meter bullet connector
20. T–bar switch connector
21. Neutral switch connector
22. T–bar switch

Parts needed for this step:

Qty.	Part
1	Screw
1	T–Bar Wire Harness
1	Relay
3	Tie strap

Installing the Harness to the Engine

Note: The following instructions are for **T–bar machines only.**

1. Route the wire harness starting at the control panel and then follow it down to the engine (Fig. 15).

2. Route the wire harness from the control panel to the T–bar switch (Fig. 15).

3. Connect the clutch connector to the clutch wire lead (Figures 15 and 16).

4. Connect the engine connector to the engine wire lead (Figures 15 and 16).

5. Remove the bolt and engine bracket from engine (Figures 15 and 16). Do not replace the engine bracket. Keep bracket for future use.

6. Connect the negative battery cable and the black harness ground to the engine with bolt (Figures 15 and 16).

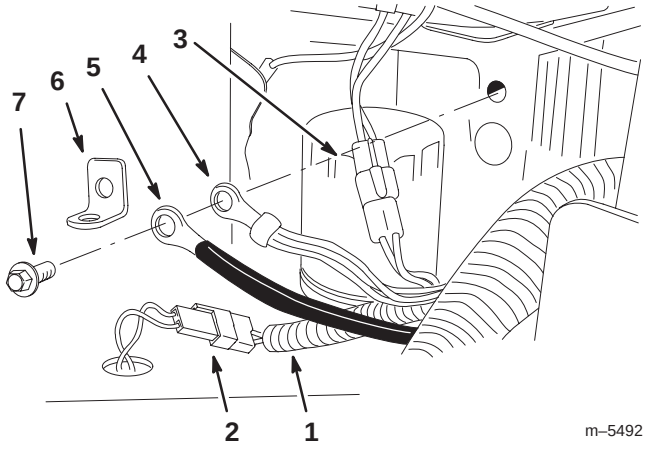

Figure 16

1. Wire harness
2. Clutch connector
3. Engine connector
4. Negative ground terminal
5. Negative battery cable
6. Engine bracket, discard
7. Engine bolt

7. Connect the ring terminals and nuts to the solenoid (Figures 15 and 17).

8. Connect the one end of the positive battery cable and the harness red wire lead to post on the solenoid (Figures 15 and 17).

9. Install the insulating cover over positive battery cable and solenoid post (Fig. 17).

10. Install the positive starter cable to the solenoid post (Fig. 17).

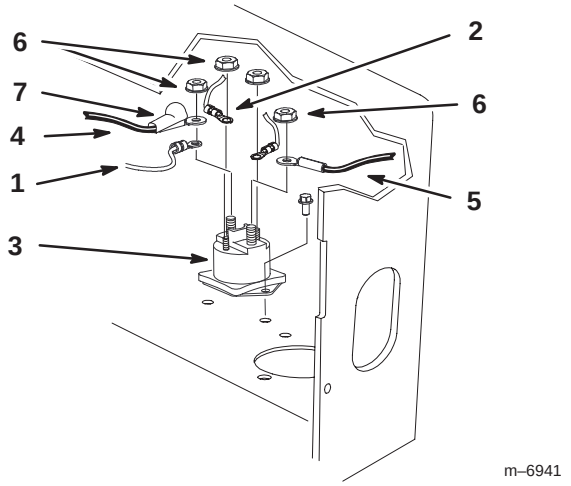

Figure 17

1. B+ wire lead
2. Ring terminal
3. Solenoid
4. Positive Battery Cable
5. Positive Starter Cable
6. Nut
7. Insulating cover

Installing the Harness to the Control Panel

Note: The following instructions are for **T–bar machines only.**

1. Install the wire harness ignition switch connector to new ignition switch (Fig. 18).

2. Install the PTO connector to the PTO switch (Figures 15 and 18).

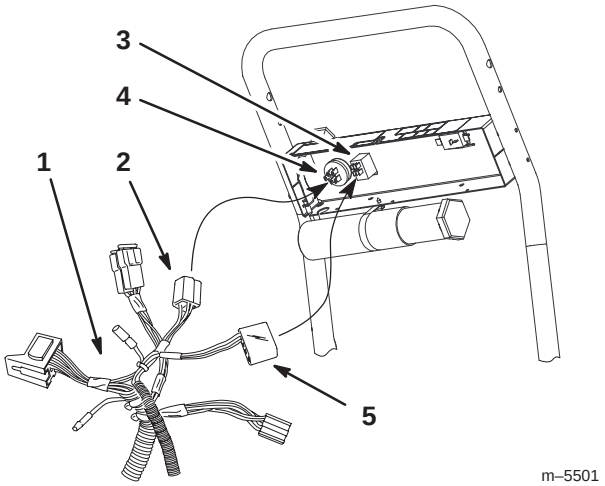

Figure 18

1. Wire harness
2. Ignitions switch connector
3. PTO switch
4. Ignitions switch
5. PTO switch connector

3. Bolt relay socket to the control panel cover. Install relay into relay socket (Figures 15 and 19).

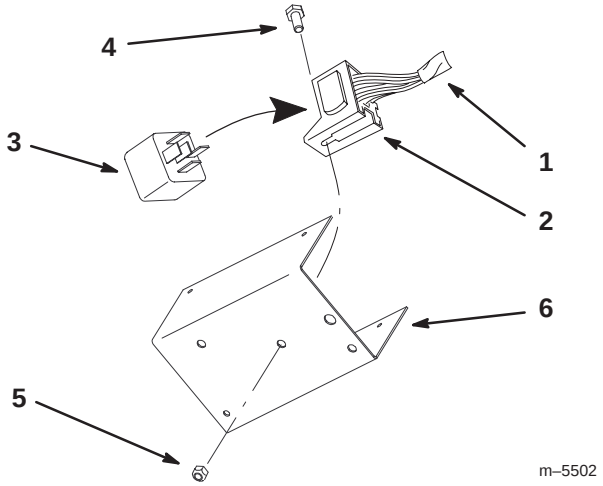

Figure 19

1. Wire harness
2. Relay socket
3. Relay
4. Bolt
5. Nut
6. Control panel cover

4. Install the module connector to the module. The module is installed to the cover (Figures 15 and 20).

5. Install the female bullet connector to the wire lead from the module (Figures 15 and 20).

6. Install fuses to the edge of cover using the clip (Fig. 20).

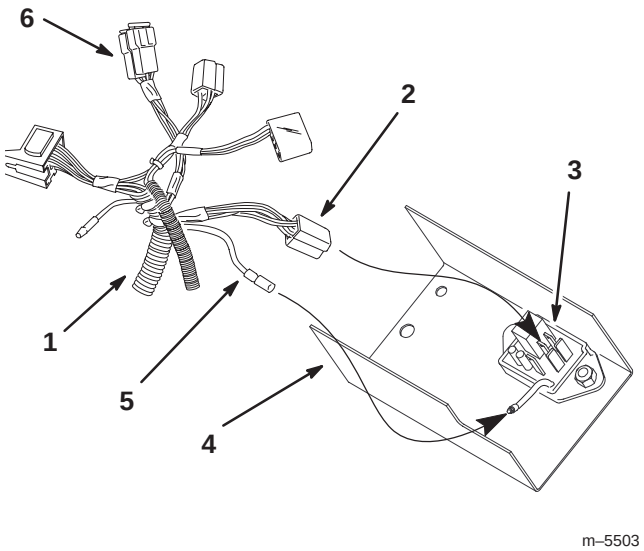

Figure 20

1. Wire harness
2. Module connector
3. Module
4. Control panel cover
5. Single module connector
6. Fuses

7. Install tie cables around harness and machine. Install tie cables so the harness will not be in the way of moving parts.

Connecting the Wire Harness to the Upper Switch

Note: The following instructions are for **T–bar machines only.**

1. Compress wire harness covering and press into lower and upper holes in rear of control panel (Fig. 21).
2. Thread harness up through rear tube of traction handle (Fig. 21).

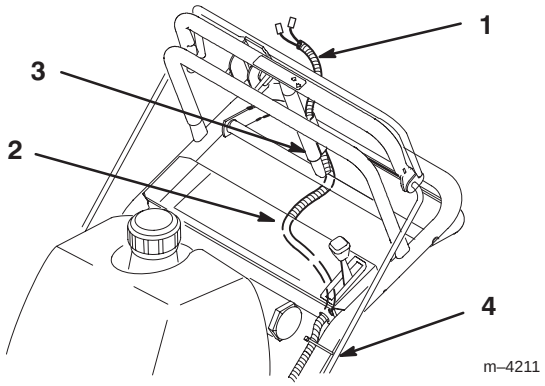

Figure 21

1. Wire harness
2. Control panel
3. Tube
4. Wire tie

3. Insert terminals into plastic plug until the clips snap into position (Fig. 22). If they do not snap turn around.
4. Push plastic plug onto switch until it latches onto switch (Fig. 22).
5. Secure wire harness and throttle cable to left handle, away from PTO lever, with wire tie (Fig. 21).

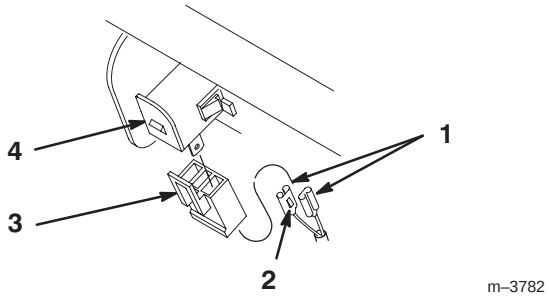

Figure 22

1. Terminal
2. Clip
3. Plastic plug
4. Switch

Installing the Hour Meter Harness

Note: The following instructions are for **T–bar machines only**.

Important If your machine has a hour meter you will need to remove the hour meter harness from the original harness.

1. Install the blade terminal (pink wire) to the single terminal on the module (Fig. 23).
2. Install bullet connector terminal (black wire) to the hour meter bullet connector on main harness (Fig. 23).
3. Install the harness connector to the hour meter (Fig. 23).

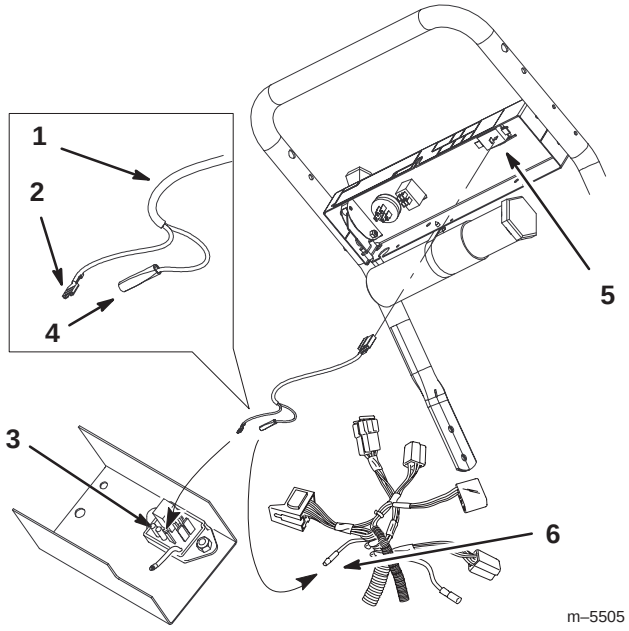

Figure 23

1. Hour meter wire harness
2. Blade connector
3. Module single terminal
4. Hour meter bullet connector
5. Hour meter
6. Bullet connector

Step
10

Installing the Wire Harness for Pistol Grip Machines

Note: The following instructions are for **pistol grip machines only.**

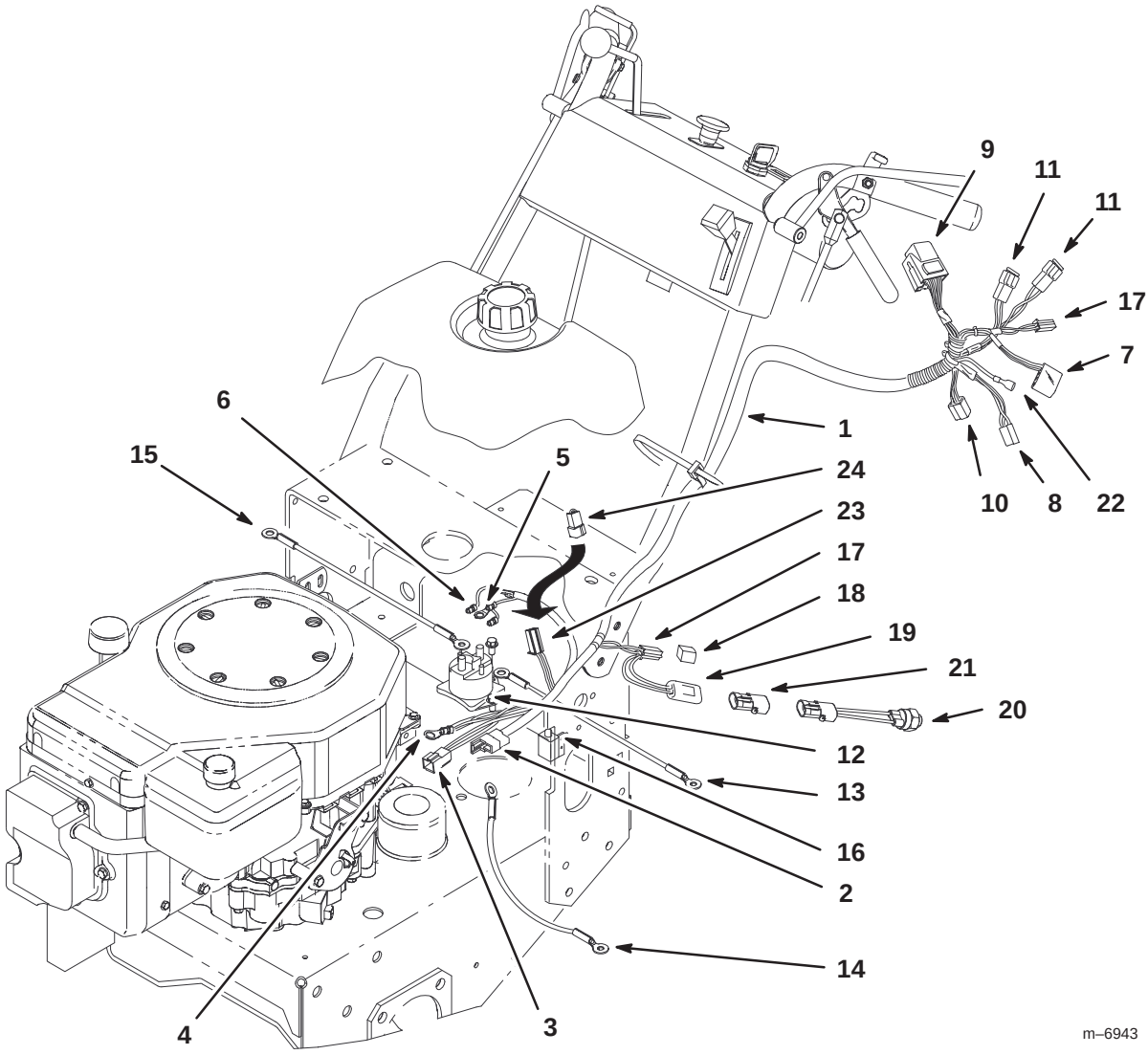

Figure 24

1. Wire harness
2. Clutch connector
3. Engine connector
4. Negative ground terminal
5. B+ wire lead
6. Solenoid bullet terminal
7. PTO switch connector
8. Module connector
9. Relay connector
10. Ignition switch connector
11. Fuse
12. Solenoid
13. Positive Battery Cable
14. Negative Battery Cable
15. Positive Starter Cable
16. Neutral Switch
17. Neutral switch connector
18. Shrink wrap
19. Transmission switch connector
20. Transmission switch
21. Transmission switch cap
22. Ignition switch blade connector
23. Parking brake connector (if equipped)
24. Jumper wire, Pistol grip gear drive machines only

Parts needed for this step:

1	Screw
1	Pistol Grip Wire Harness
1	Relay
3	Tie strap

Installing the Harness to the Engine

Note: The following instructions are for **pistol grip machines only.**

1. Route the wire harness starting at the upper handle and then follow it down to the engine.

Important Make sure the harness is routed in front of the speed control crank and cross bar (Fig. 25).

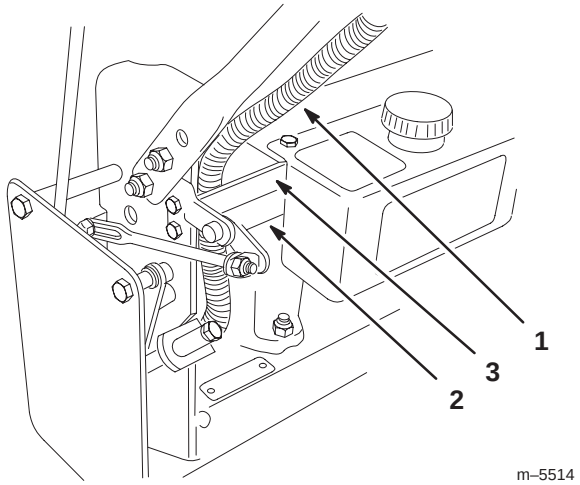

Figure 25

1. Wire harness
2. Speed control crank
3. Cross bar

2. Connect the clutch connector to the clutch wire lead (Figures 24 and 26).

3. Connect the engine connector to the engine wire lead (Figures 24 and 26).

4. Remove the bolt and engine bracket from engine (Figures 24 and 26). Do not replace the engine bracket. Keep bracket for future use.

5. Connect the battery negative cable and the black harness ground wire to the engine with bolt (Figures 24 and 26).

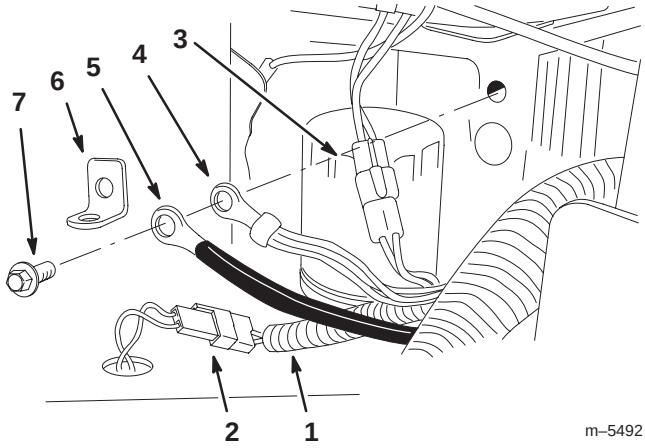

Figure 26

1. Wire harness
2. Clutch connector
3. Engine connector
4. Negative ground terminal
5. Negative battery cable
6. Engine bracket, discard
7. Engine bolt

6. Connect the bullet terminals to the solenoid (Figures 24 and 27).

7. Connect one end of the positive battery cable and the B+ harness wire lead (red) to one post on the solenoid (Figures 24 and 27).

8. Install insulating boot over positive battery cable and solenoid post (Figures 15 and 17).

9. Install positive starter cable to the solenoid post (Figures 24 and 27).

10. Make sure the other end of the positive starter cable is connected to the starter motor.

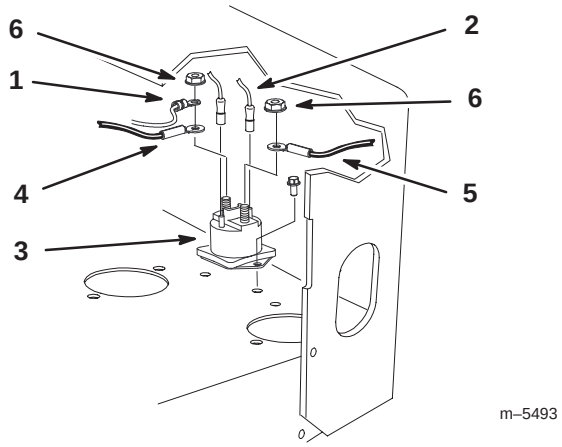

Figure 27

1. B+ wire lead
2. Bullet terminal
3. Solenoid
4. Positive Battery Cable
5. Positive Starter Cable
6. Nut

Installing the Harness to the Control Panel

Note: The following instructions are for **pistol grip machines only.**

1. Install the ignition switch harness connector to new ignition switch (Figures 24 and 28).
2. Install the ignition switch blade harness connector to new ignition switch (Figures 24 and 28).
3. Install the PTO harness connector to the PTO switch (Figures 24 and 28).
4. Install the Operator Presence Control (OPC) switch harness connector to the OPC switch (Figures 24 and 28).

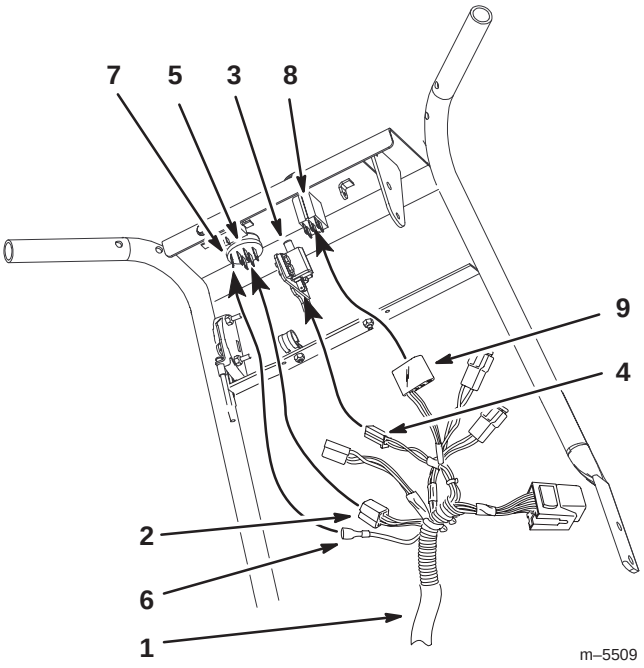

Figure 28

1. Wire harness
2. Ignition switch connector
3. OPC Switch
4. OPC switch connector
5. Ignition switch
6. Ignition switch blade connector
7. Ignition switch terminal
8. PTO switch
9. PTO switch connector

5. If the machine has a parking brake lever shown in Figure 29, connect the harness parking brake connector to the parking brake switch (Fig. 29).

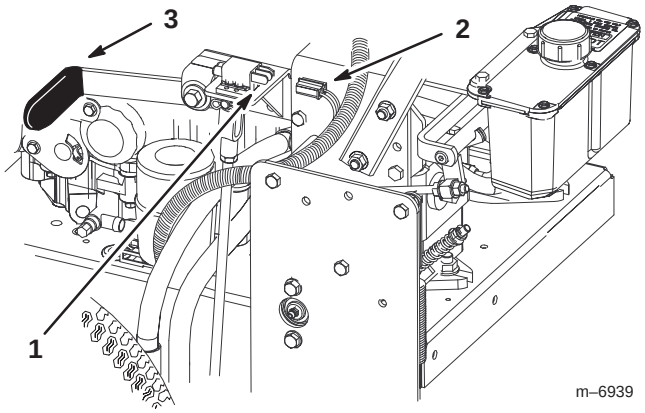

Figure 29

1. Parking brake switch
2. Harness parking brake connector
3. Parking brake

6. If there is no parking brake lever shown in Figure 29, install the jumper wire onto the harness parking brake connector (Fig. 29).

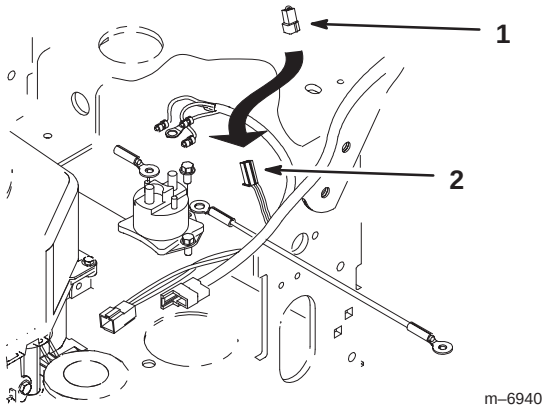

Figure 30

1. Jumper wire
2. Harness parking brake connector

7. Remove the hour meter filter from the panel and discard (Fig. 31).
8. Install the hour meter harness connector directly to the hour meter (Fig. 31).
9. Install the fuses to the edge of the cover using the clip (Figures 24 and 31).

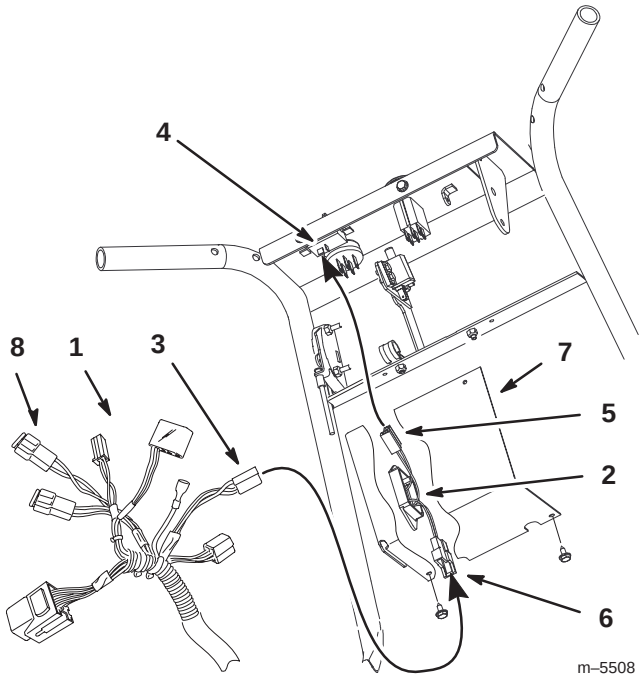

Figure 31

1. Wire harness
2. Hour meter filter—remove
3. Hour meter harness connector
4. Hour meter
5. Hour meter harness connector
6. Module plug–in
7. Cover
8. Fuses

10. Bolt relay socket to the control panel. Install relay into relay socket (Figures 24 and 32).

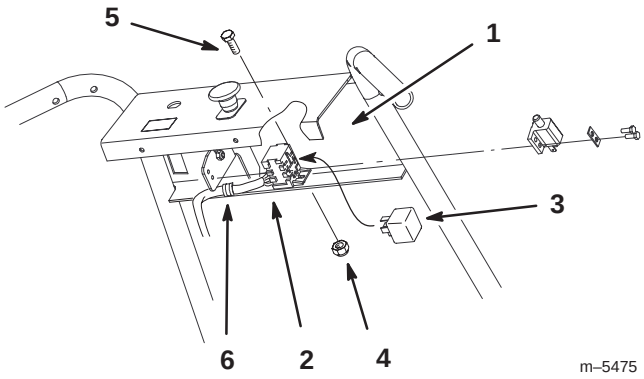

Figure 32

1. Control panel
2. Relay socket
3. Relay
4. Nut
5. Bolt
6. R–clamp

11. Install tie cables around harness and machine. Install tie cables so the harness will not be in the way of moving parts.

12. Install harness into "R" clamp located under control panel (Fig. 32).

Step 11

Installing the Battery

Parts needed for this step:

Qty.	Part
2	Nut, 1/4 inch
1	Battery holdown
1	Battery holdown plate
2	Nut, 5/16 inch
1	Battery cable, black
1	Battery cable, red
1	Terminal boot, black
2	Locknut, 1/4 inch
2	Screw, 5/16 x 3/4 inch
1	Battery cable, red
1	Battery, obtain from dealer

Procedure

Warning

CALIFORNIA

Proposition 65 Warning

Battery posts, terminals, and related accessories contain lead and lead compounds, chemicals known to the State of California to cause cancer and reproductive harm. ***Wash hands after handling.***

Note: You will need to obtain a battery from an Authorized Service Dealer.

1. Fill battery with electrolyte and charge; refer to Activating the Battery on page 18.

2. Position battery onto holder with terminal posts toward engine. Battery should be centered on battery holder.

3. Connect the red terminal boot onto positive battery cable and the black terminal boot onto the negative battery cable.

4. Mount battery to holder with two support rods, battery clamp and two locknuts. Position support rods in mounting holes as shown in Fig. 6.

5. Tighten locknuts so battery is held securely in position and will not slide. **Do not over tighten.**

6. Connect the positive (red) cable to the positive battery post with a bolt (5/16 x 3/4 inch) and nut (5/16 inch) (Fig. 33). Slide the rubber cover over the battery post.

7. Connect the negative (black) cable to the negative battery post with a bolt (5/16 x 3/4 inch) and nut (5/16 in.) (Fig. 33). Slide the rubber cover over the battery post.

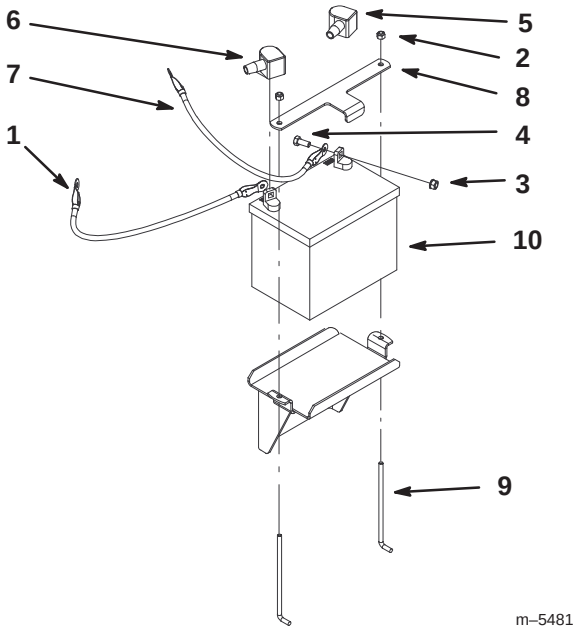

Figure 33

1. Negative cable
2. Nut,1/4 inch
3. Nut, 5/16 inch
4. Bolt, 5/16 x 3/4 inch
5. Rubber cover (red)
6. Rubber cover (black)
7. Positive cable
8. Battery hold down plate
9. Battery hold down
10. Battery

Activating the Battery

Note: Refer to the battery manufacturer's recommended procedures for activating and charging the battery.

Danger

Battery electrolyte contains sulfuric acid which is a deadly poison and causes severe burns.

- **Do not drink electrolyte and avoid contact with skin, eyes or clothing. Wear safety glasses to shield your eyes and robber gloves to protect your hands.**
- **Fill the battery where clean water is always available for flushing the skin.**
- **Follow all instructions and comply with all safety messages on the electrolyte container.**

Warning

Charging battery produces gasses that can explode and cause serious injury.

- **Keep cigarettes, sparks and flames away from battery.**
- **Make sure the ignition switch is off.**
- **Ventilate when charging or using battery in an enclosed space.**

Operation

Starting And Stopping

1. Make sure spark plug wire is installed on spark plug and fuel valve is open.
2. Shift into neutral.
3. Move throttle control to the CHOKE position before starting a cold engine.

Note: A warm or hot engine usually does not require any choking. To start a warm engine, move throttle control to FAST position.

4. Rotate the ignition key to the START position. When the engine starts, release the key, and regulate the throttle to the desired speed.

Note: Prolonged cranking of the starter may cause damage to the starter if cranked more than 15 seconds per minute.

Note: The battery must be installed before the PTO clutch will engage after the electric start kit has been installed.

Removing the Battery

Warning

CALIFORNIA

Proposition 65 Warning

Battery posts, terminals, and related accessories contain lead and lead compounds, chemicals known to the State of California to cause cancer and reproductive harm. *Wash hands after handling.*

Warning

Battery terminals or metal tools could short against metal tractor components causing sparks. Sparks can cause the battery gasses to explode, resulting in personal injury.

- **When removing or installing the battery, do not allow the battery terminals to touch any metal parts of the tractor.**
- **Do not allow metal tools to short between the battery terminals and metal parts of the tractor.**

Warning

Incorrect battery cable routing could damage the tractor and cables causing sparks. Sparks can cause the battery gasses to explode, resulting in personal injury.

- **Always *Disconnect* the negative (black) battery cable before disconnecting the positive (red) cable.**
- **Always *Reconnect* the positive (red) battery cable before reconnecting the negative (black) cable.**

1. Disengage the power take off (PTO), chock or block tires, and turn the ignition key to off. Remove the key.
2. With the engine off, locate the battery.
3. Lift the black rubber cover up on the negative cable. Disconnect the negative (black) ground cable from the battery post (Fig. 34).
4. Lift the red rubber cover up on the positive cable. Disconnect the positive cable (red cover) from the battery post (Fig. 34).
5. Remove the battery hold down plate (Fig. 34). Remove battery from the machine.

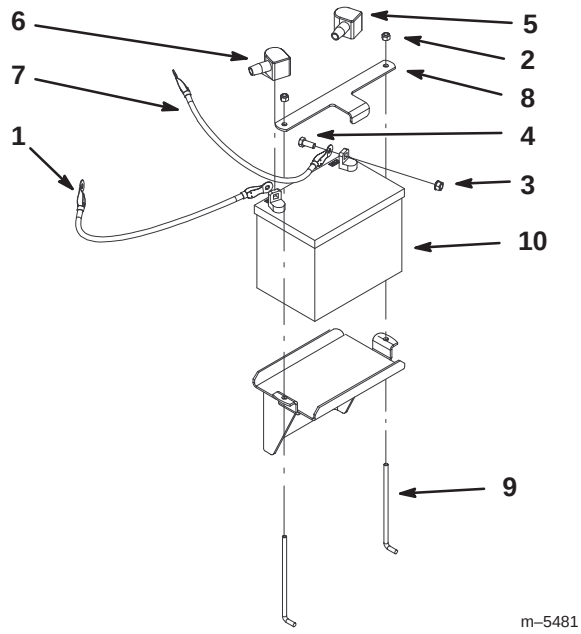

Figure 34

1. Negative cable
2. Nut (1/4 inch)
3. Nut (5/16 inch)
4. Bolt, 5/16 x 3/4 inch
5. Rubber cover (red)
6. Rubber cover (black)
7. Positive cable
8. Battery hold down plate
9. Battery hold down
10. Battery

Wiring Diagram for Pistol Grip Machines

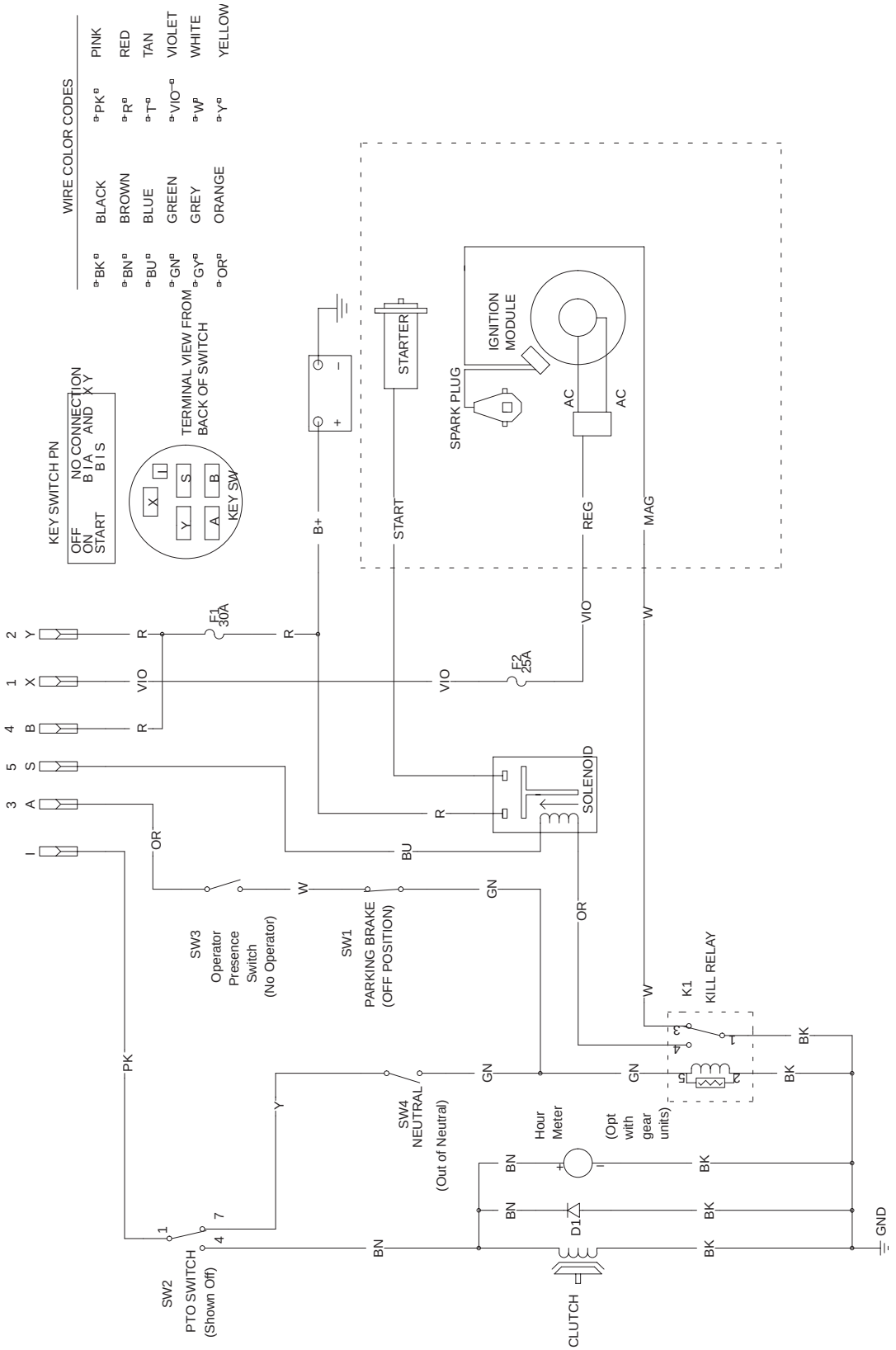

Wiring Diagram for T–Bar Machines

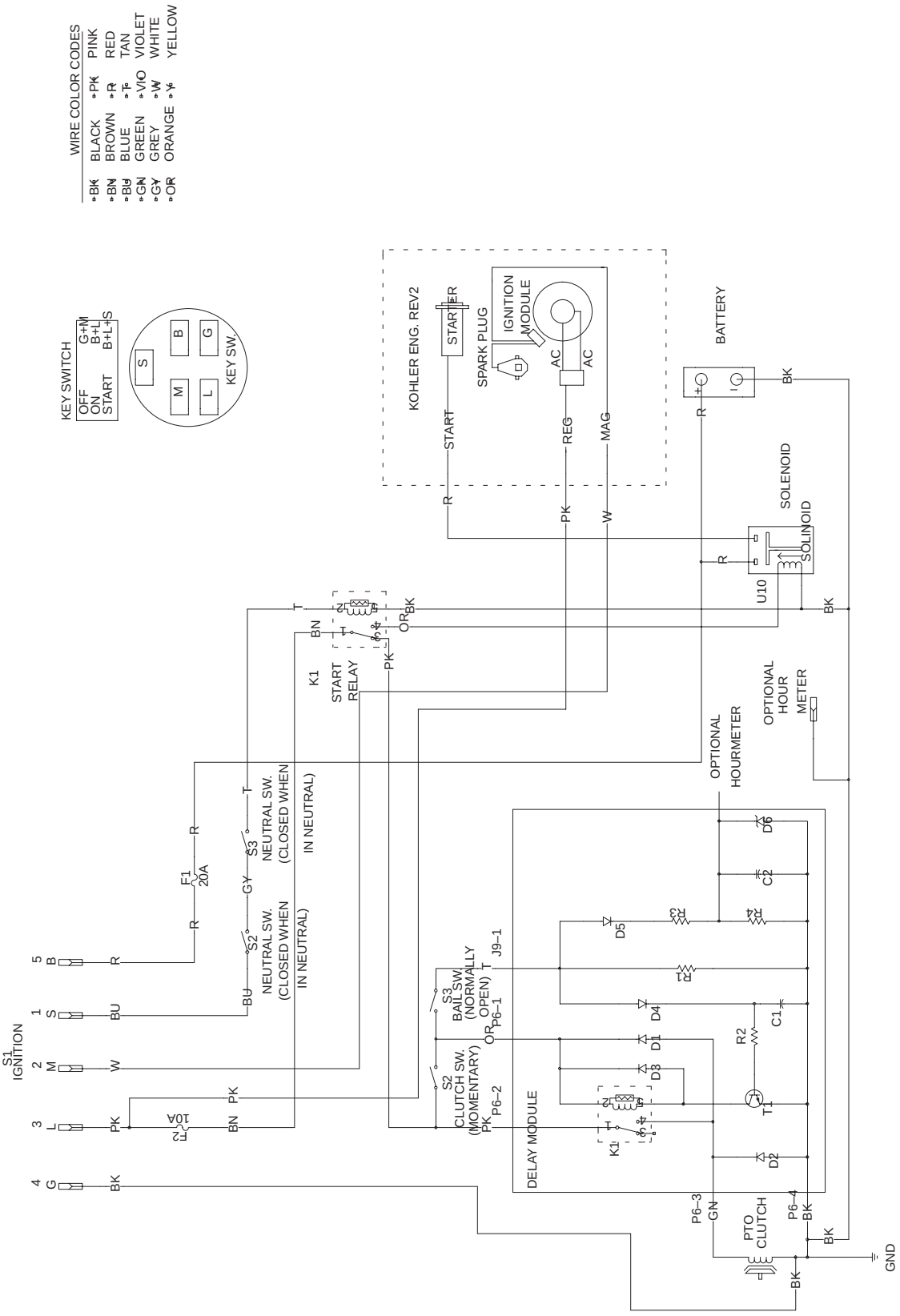


TORO®