FORM NO. 3312-347

TORO®

MODEL NO. 20584-4000001 & UP

PARTS CATALOG

21" H.P. REAR BAGGER

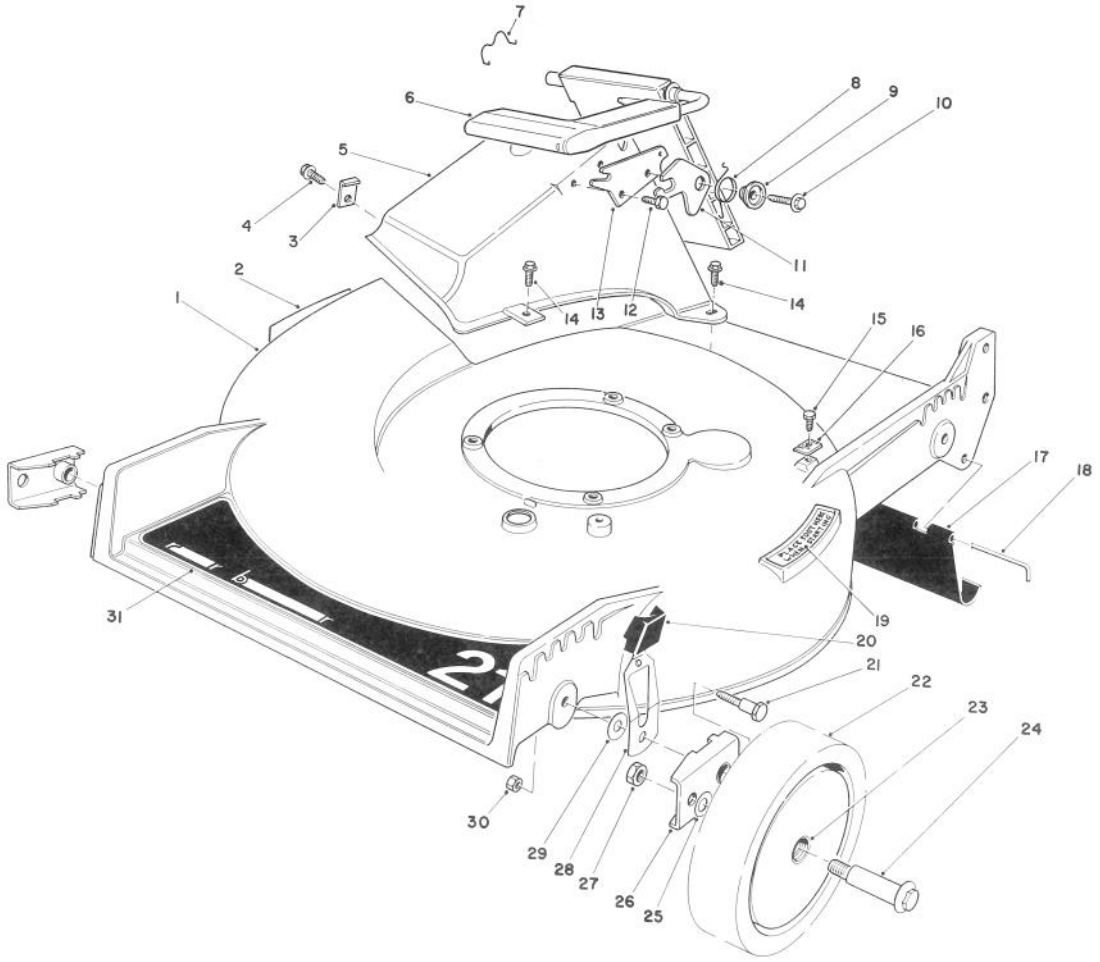

HOUSING ASSEMBLY

Ref. No.	Part No.	Description	No. Used
1	11-4079	Housing — 21" (Incl. Ref. #2 & 19)	1
2	43-8480	Decal — Danger	1
3	47-6540	Clip — Tunnel	1
4	12-3270	Screw — Self Tapping	1
5	46-3500	Tunnel — Discharge	1
6	51-0200	Discharge Door Assembly	1
7	47-5840	Retainer — Door	1
8	33-4860	Spring — Torsion	1
9	43-4840	Spacer — Latch	1
10	46-8091	Screw — Self Tapping, Hex Washer Hd.	1
11	42-4010	Latch — Safety	1
12	46-8090	Screw — Self Tapping, Hex Washer Hd.	1
13	23-1040	Plate — Latch	1
14	46-6811	Screw & Washer Assembly	3
15	32144-11	Screw — Self Tapping, Hex Washer Hd.	1

Ref. No.	Part No.	Description	No. Used
16	46-5610	Clamp — Cable	1
17	44-0580	Shield — Rear	1
18	33-3208	Rod — Shield	1
19	46-7370	Decal — Step Pad	1
20	25-7740	Knob — Arm	4
21	44-5270	Screw — Pivot	4
22	11-6349	Wheel & Tire Assembly (Incl. Ref. #23)	4
23	27-6250	Bushing — Wheel	8
24	27-6231	Bolt — Wheel	4
25	40-1940	Washer — Wheel	4
26	47-2940	Pivot Arm Assembly	4
27	3296-6	Locknut	4
28	44-0990	Spring Arm Assembly	4
29	5-4460	Washer — Pivot	4
30	3296-29	Locknut	4
31	44-0450	Decal — 21" Rear Bagger	1

©The Toro Company — 1983

PRICE $1.00

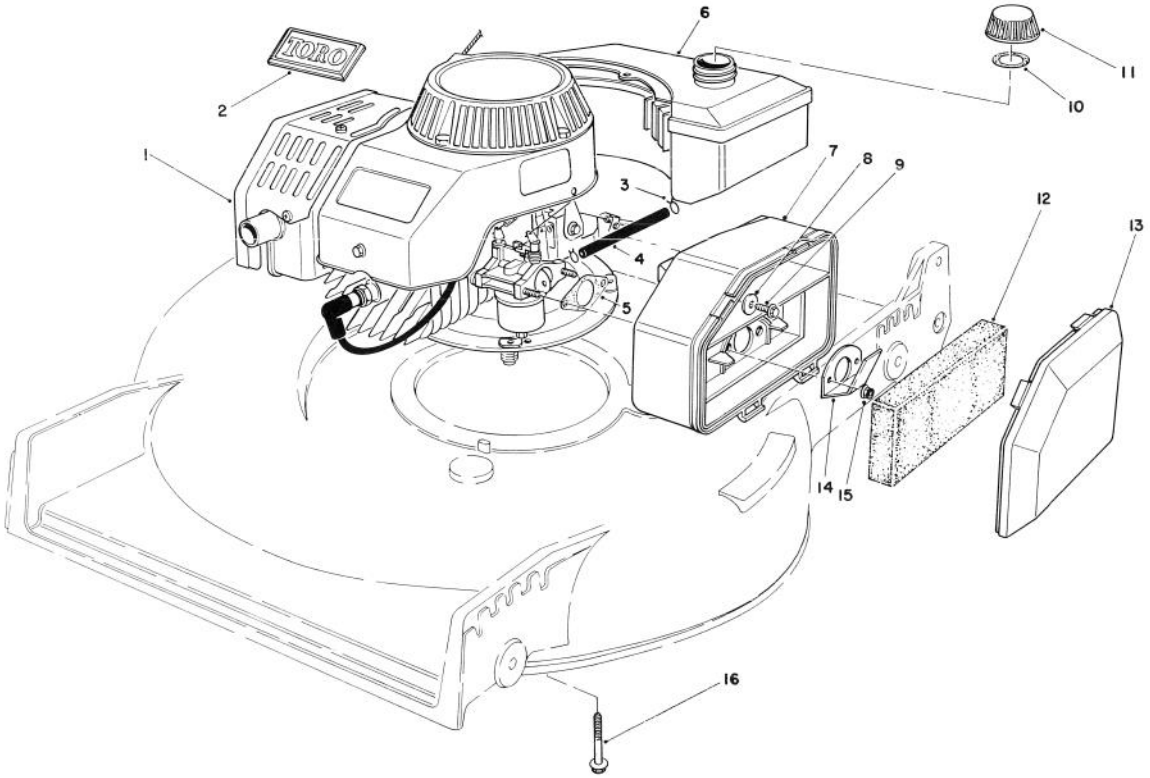

ENGINE ASSEMBLY

Ref. No.	Part No.	Description	No. Used
1	59250	Engine	1
2	46-8290	Plate — Logo, Toro	1
3	2412-80	Clamp — Fuel Line	2
4	81-2310	Fuel Line	1
5	81-0090	Gasket — Air Cleaner	1
6	81-0040	Fuel Tank Assembly	1
7	81-0110	Air Cleaner	1
8	3256-16	Washer — Flat	1
9	51-2690	Screw — Hex Washer Hd.	1

Ref. No.	Part No.	Description	No. Used
10	20-4620	Gasket — Gas Cap	1
11	42-0681	Gas Cap Assembly (Incl. Ref. # 10)	1
12	81-0100	Foam Element — Air Cleaner	1
13	81-0120	Cover — Air Cleaner	1
14	81-0140	Deflector — Spitback	1
15	49-7810	Locknut	2
16	3234-11	Screw — Hex Flange Hd.	4

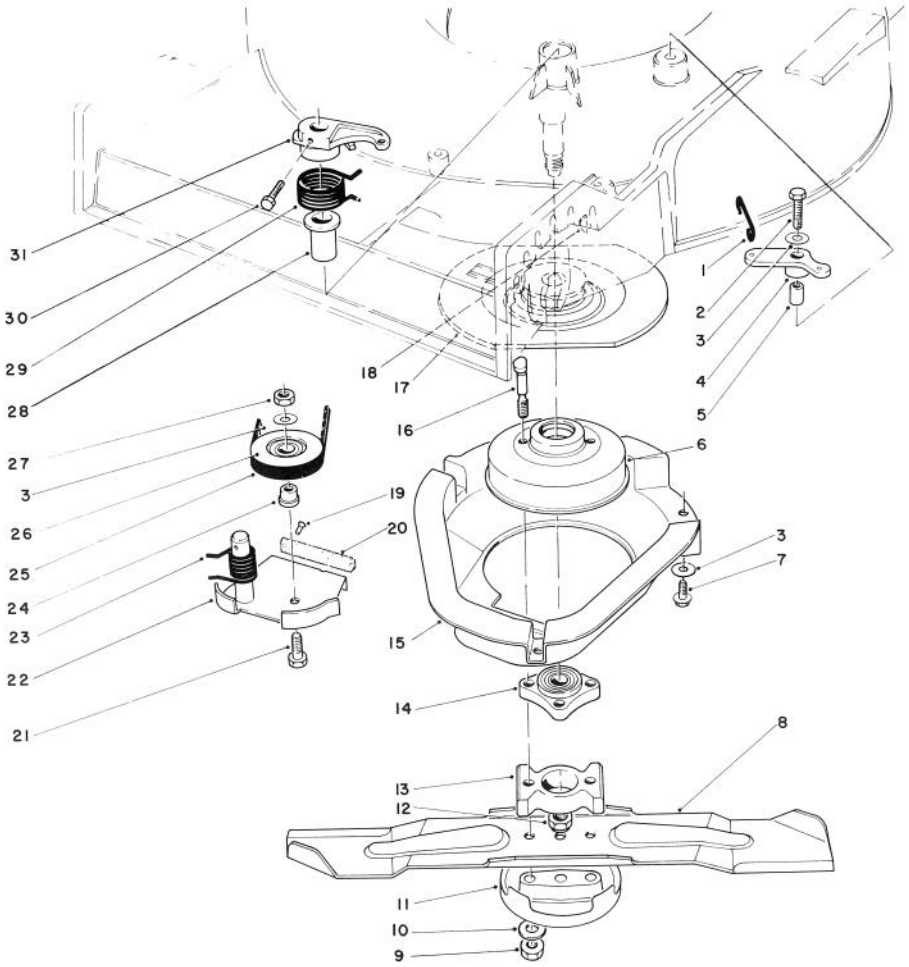

BLADE BRAKE CLUTCH ASSEMBLY

Ref. No.	Part No.	Description	No. Used
1	49-2810	Link — Control	1
2	32104-107	Screw — Self-Tapping Hex Hd.	1
3	3256-23	Washer — Plain	5
4	49-7960	Bell Crank	1
5	49-7950	Sleeve — Bell Crank	1
6	42-1020	Drum — Brake	1
7	32144-11	Screw — Thread Forming Hex Washer Hd.	3
8	42-1000	Blade 21"	1
9	3296-6	Nut — Lock	2
10	40-1940	Washer — Flat	2
11	42-0910	Cup — Anti Scalp	1
12	3296-33	Nut — Lock	1
13	42-6760	Spacer — Blade	1
14	42-6890	Hub Assembly	1
15	46-5691	Shield	1
16	42-3190	Bolt — Blade	2

Ref. No.	Part No.	Description	No. Used
17	43-7720	Flywheel	1
18	3257-3	Key Woodruff	1
19	3295-23	Rivet — Semi Tubular	2
20	42-0890	Pad — Brake	1
21	322-16	Capscrew	1
22	49-7920	Brake Plate (Incl. Ref. #19 & 20)	1
23	46-5670	Spring — Torsion Lower	1
24	46-5630	Hub — Idler Pulley	1
25	42-0881	V-Belt	1
26	46-5650	Pulley Idler	1
27	3296-47	Nut — Lock	1
28	46-6680	Bushing — Flanged	1
29	49-7970	Spring — Torsion Upper	1
30	32104-96	Screw — Self Tapping Hex Hd.	1
31	49-2820	Lever	1

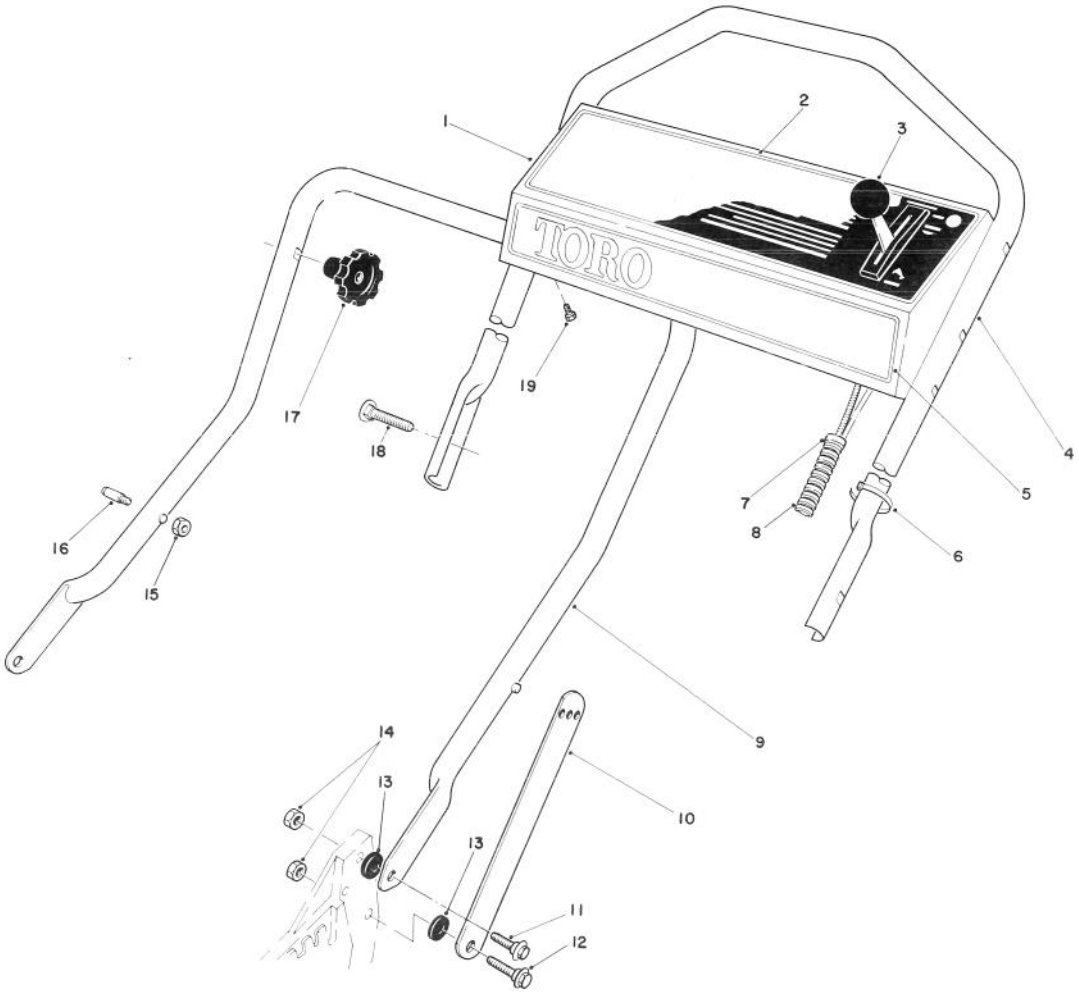

HANDLE ASSEMBLY

Ref. No.	Part No.	Description	No. Used
1	11-6779	Panel — Control (Incl. Ref. #2)	1
2	49-3070	Decal — Instruction Panel	1
3	49-4183	Control — Throttle (Bend Type #1) (Sheath Lg. 54¼ inch) (Wire Lg. 2½ inch)	1
4	46-5411	Handle — Upper	1
5	46-7380	Decal — Toro Panel	1
6	3290-378	Cable Tie	2
7	2412-50	Clip — Convoluted Tubing	4
8	46-6442	Cover — Control Cables	1

Ref. No.	Part No.	Description	No. Used
9	43-1360	Lower Handle Assembly	1
10	43-1370	Latch — Handle	2
11	27-7211	Screw — Shoulder	2
12	27-7210	Screw — Shoulder	2
13	3-3287	Spacer — Handle Latch	4
14	3296-29	Nut — Lock	4
†15	3296-47	Nut — Lock	2
†16	49-2750	Pin — Handle	2
17	19-4050	Knob — Handle Release	2
18	17-9421	Screw — Handle	2
19	32104-76	Screw — Self Tapping Slotted	4

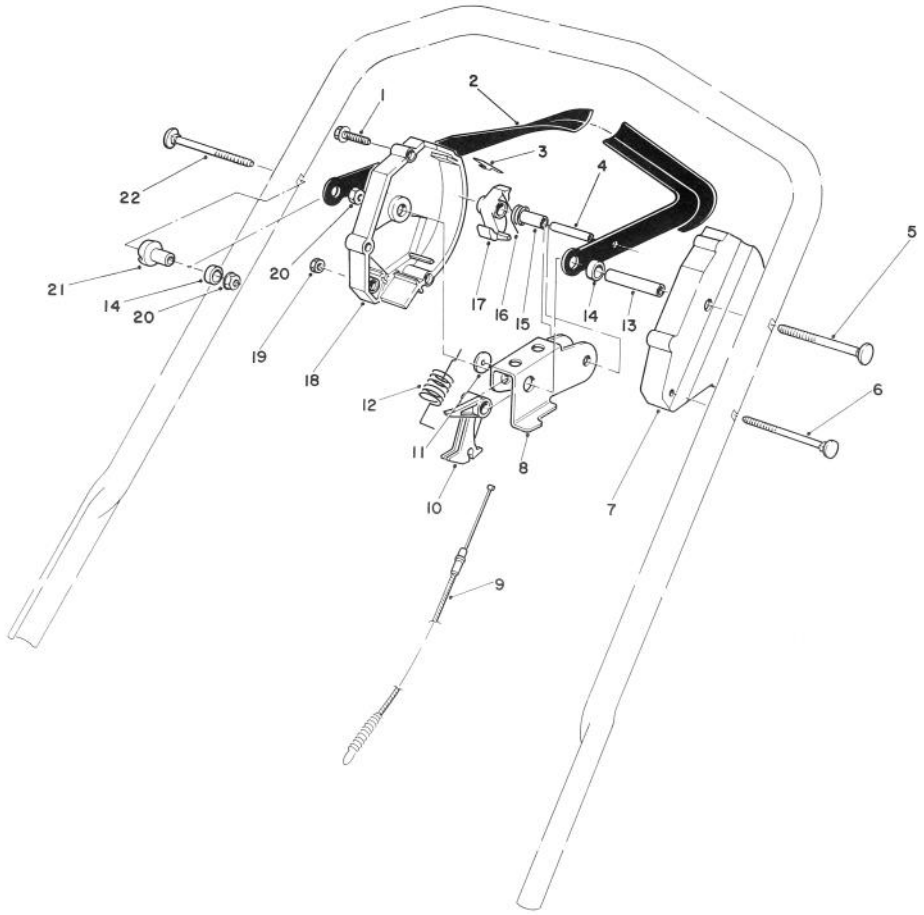

CONTROL ASSEMBLY

Ref. No.	Part No.	Description	No. Used
1	46-7040	Screw — Thread Forming Hex Washer Hd.	3
2	46-5560	Control Bar Assembly	1
3	46-5570	Spring — Leaf	1
4	32121-9	Pin — Coil	1
5	17-9422	Screw — Handle	1
6	46-6431	Screw — Handle	1
7	46-5460	Housing — Control L.H.	1
8	46-5490	Rocker	1
9	46-5470	Cable — Clutch	1
10	46-5540	Lever — Cable	1
11	46-5600	Washer — Nylon	1
12	49-8020	Spring — Extension	1
13	46-5590	Spacer	1
14	256-276	Spacer	2
15	46-5550	Bushing — P.M.	1
16	46-5510	Spring — Torsion	1
17	46-5530	Hook — Control	1
18	46-5450	Housing — Control R.H.	1
19	3296-42	Locknut	1
20	3296-58	Locknut	2
21	49-1630	Support — Spacer	1
22	17-9421	Screw — Handle	1

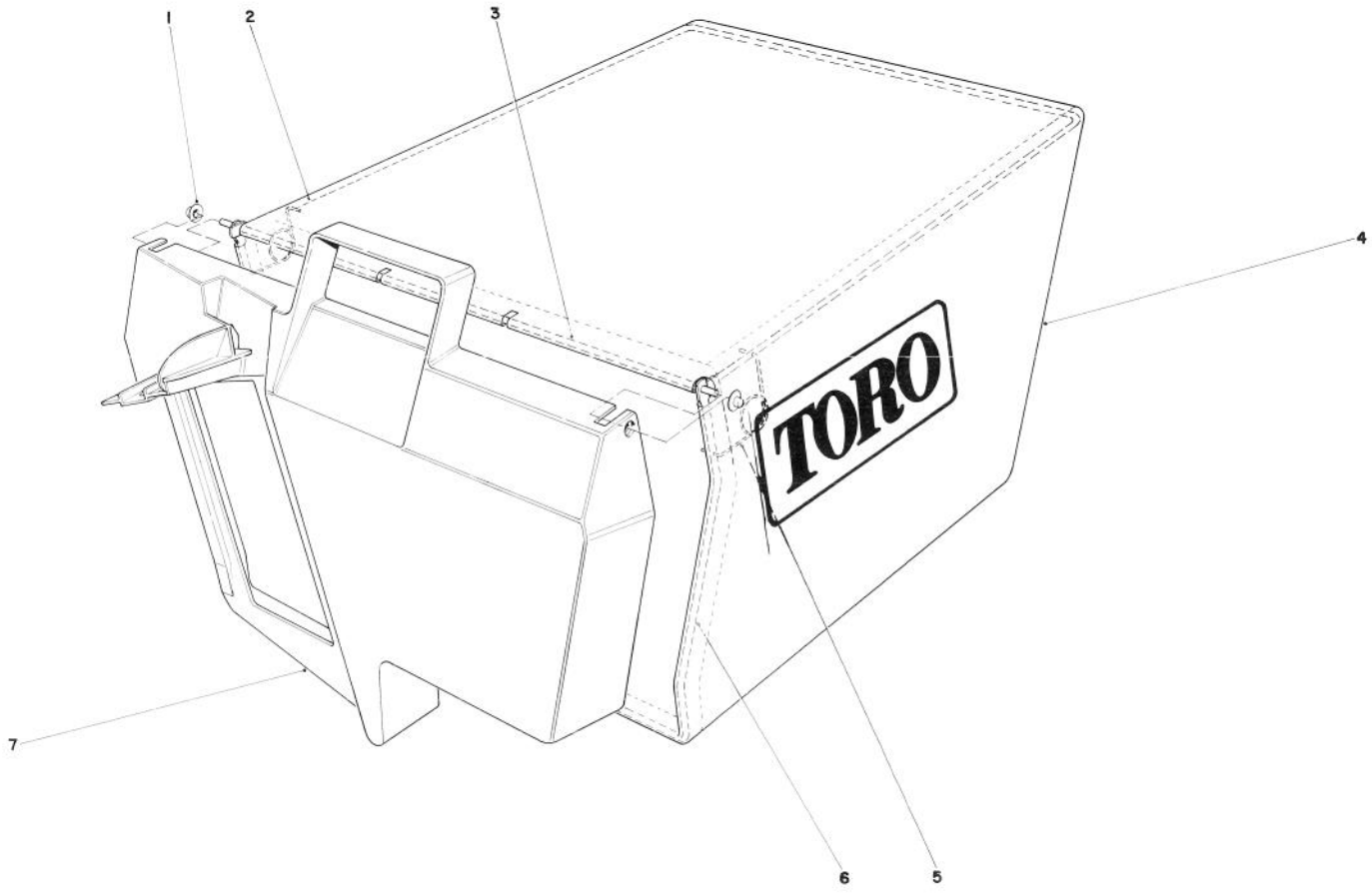

GRASS BAG ASSEMBLY NO. 11-0159

Ref. No.	Part No.	Description	No. Used
1	3290-422	Push Nut	2
2	42-4030	Bag Frame Upper	1
3	33-4820	Hinge Bag Door	1
4	8-2759	Grass Bag	1

Ref. No.	Part No.	Description	No. Used
5	36-6910	Spring	2
6	43-0030	Frame Bag	1
7	36-1331	Door Grass Bag	1

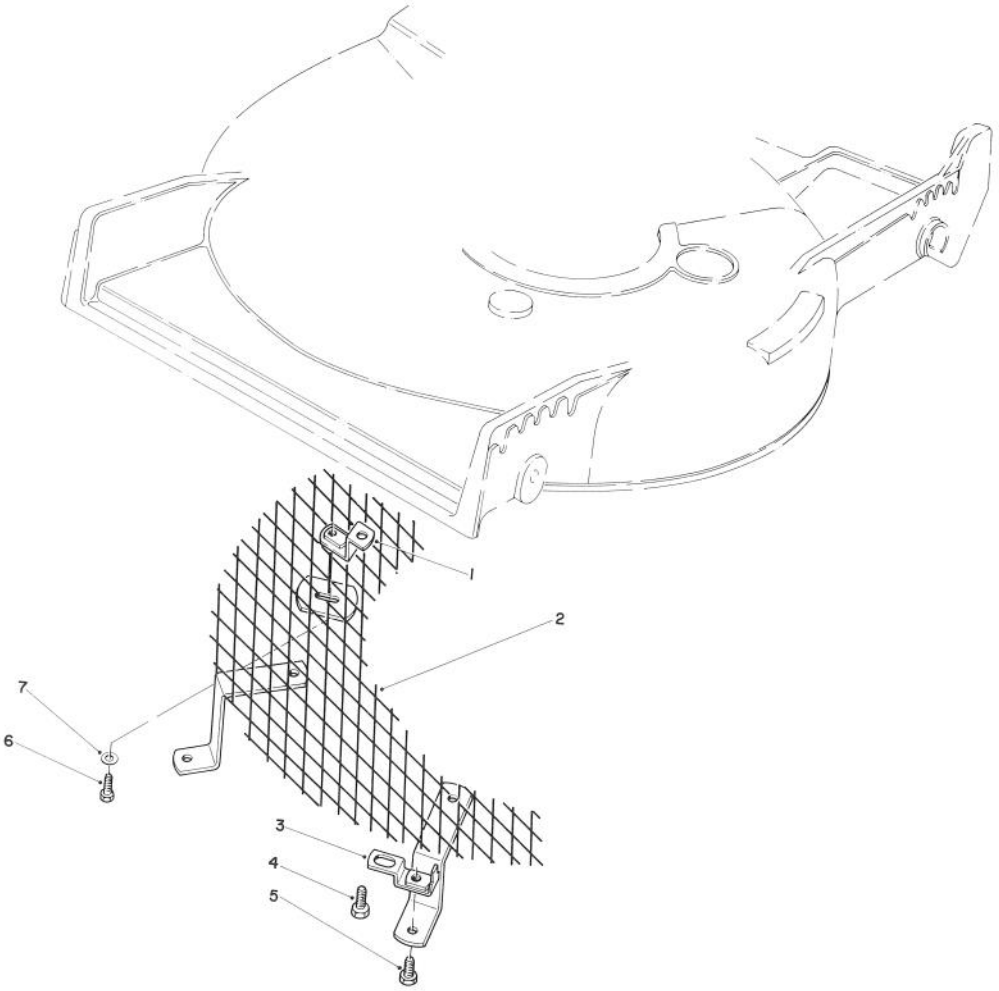

LEAF SHREDDER KIT MODEL NO. 59157 (Optional)

Ref. No.	Part No.	Description	No. Used
1	47-6260	Bracket	1
2	47-6230	Screen	1
3	46-4880	Mounting Bracket	2
4	32144-11	Screw — Self Tapping	2

Ref. No.	Part No.	Description	Ref. No.
5	321-3	Capscrew, Hex Hd.	2
6	321-5	Capscrew, Hex Hd.	1
7	3256-1	Washer	1

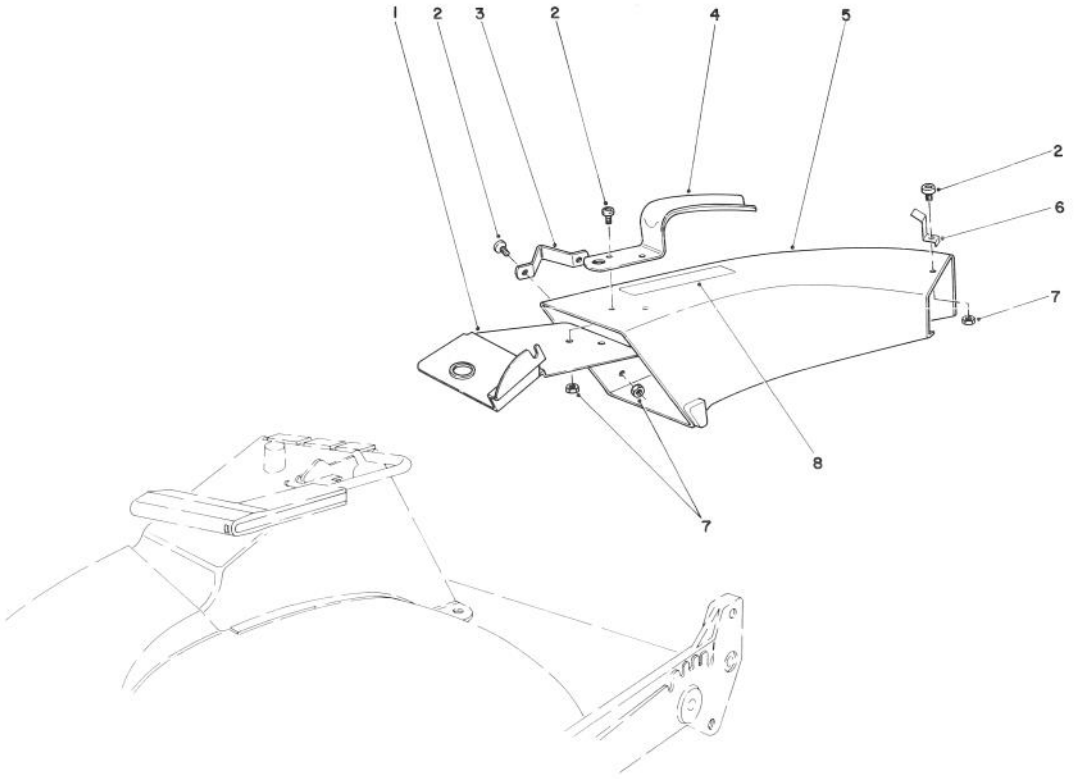

SIDE DISCHARGE CHUTE MODEL NO. 59108 (Optional)

Ref. No.	Part No.	Description	No. Used
1	44-2330	Plate — Discharge Chute	1
2	3251-3	Screw	5
3	46-6580	Bracket — Side	1
4	42-1340	Handle — Grass Chute	1
5	11-7149	Chute — Discharge (Incl. Ref. #8)	1

Ref. No.	Part No.	Description	No. Used
6	49-2630	Clip — Cable Stop	1
7	3296-12	Locknut	5
8	39-9120	Decal — Caution	1

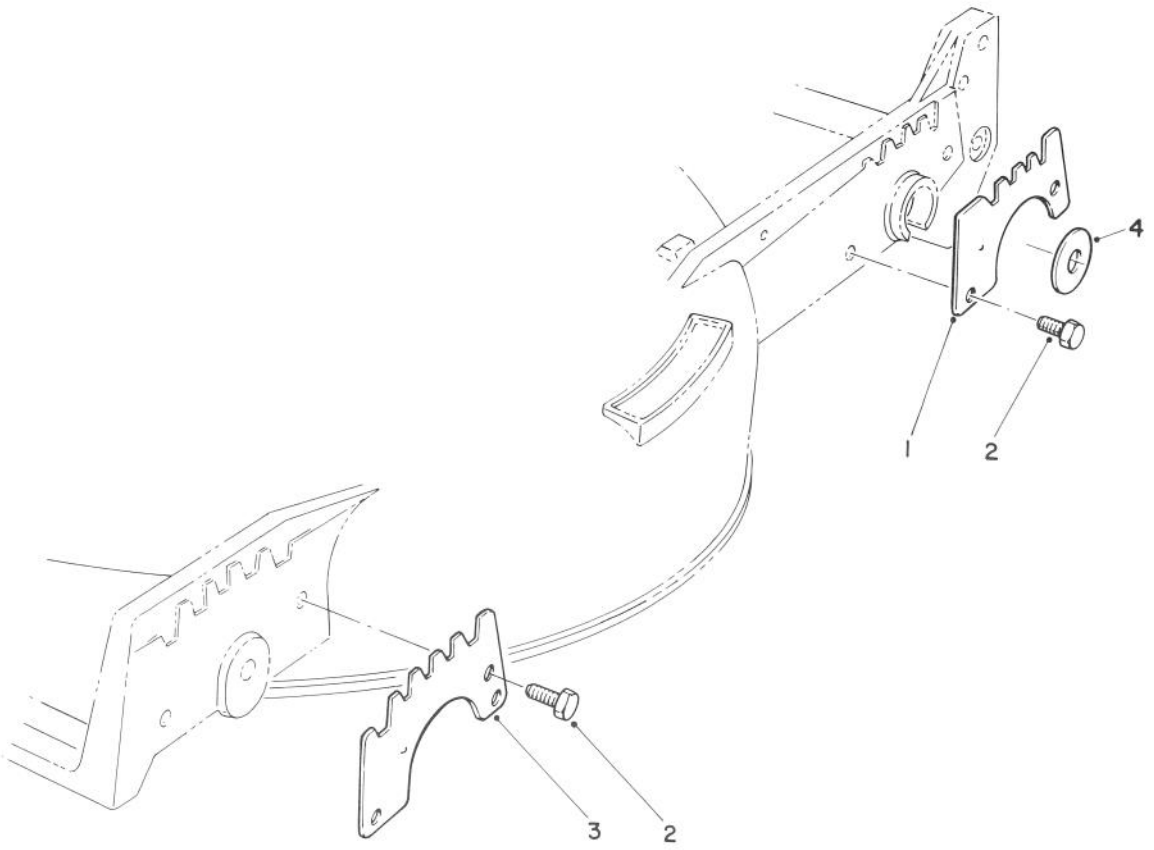

WEAR PLATE KIT NO. 49-4080 (Optional)

Ref. No.	Part No.	Description	No. Used
1	49-4070	Plate — Wear, Rear	2
2	32104-17	Screw — Thread Forming	8

Ref. No.	Part No.	Description	No. Used
3	43-5050	Plate — Wear, Front	2
4	33-0390	Washer	2

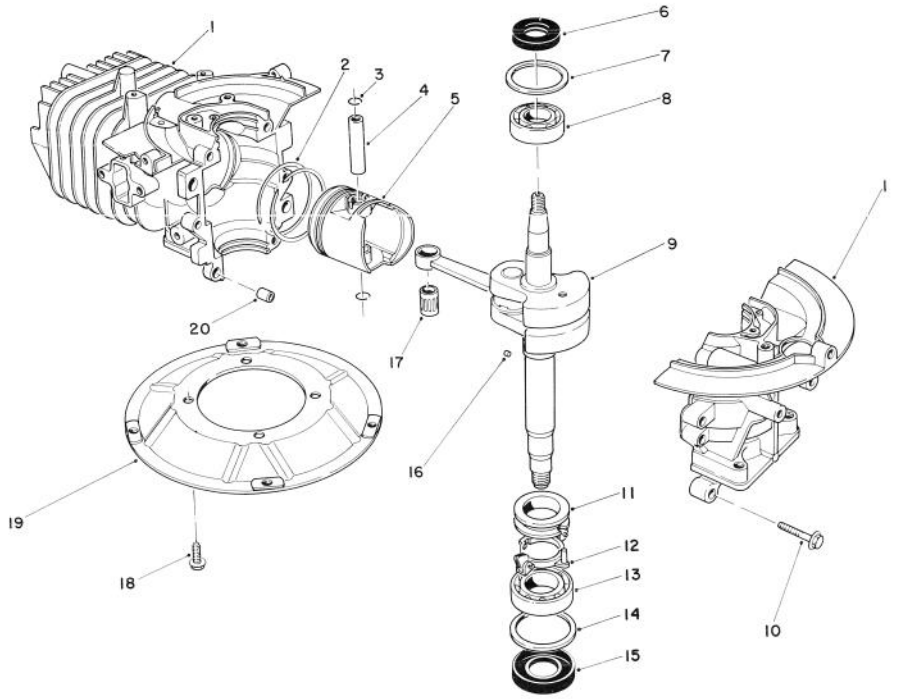

CRANKSHAFT ASSEMBLY

Ref. No.	Part No.	Description	No. Used
1	81-2060	Crankcase/Cylinder Assy.	1
2	81-0590	Ring Set	1
3	81-0620	Circlip	2
4	81-0600	Wrist Pin	1
5	81-0580	Piston — 58 mm	1
6	81-0720	Oil Seal — Upper	1
7	81-0710	Thrust Washer — Upper	1
8	81-0690	Bearing — Upper — 20 mm	1
9	81-1890	Crankshaft/Connecting Rod Assembly	1
10	81-0540	Bolt (30 mm Lg)	6

Ref. No.	Part No.	Description	No. Used
11	81-0770	Spacer — Governor	1
12	81-0750	Bracket — Governor Arm	1
13	81-0700	Bearing — Lower — 25 mm	1
14	81-0730	Thrust Washer — Lower	1
15	81-0740	Oil Seal — Lower	1
16	81-0760	Pin	1
17	81-0610	Bearing — Wrist Pin	1
18	81-0570	Bolt	4
19	81-0560	Plate — Mounting	1
20	81-0520	Pin — Crankcase Dowel	2
*	11-6299	Short Block Assembly	1

*Not Illustrated

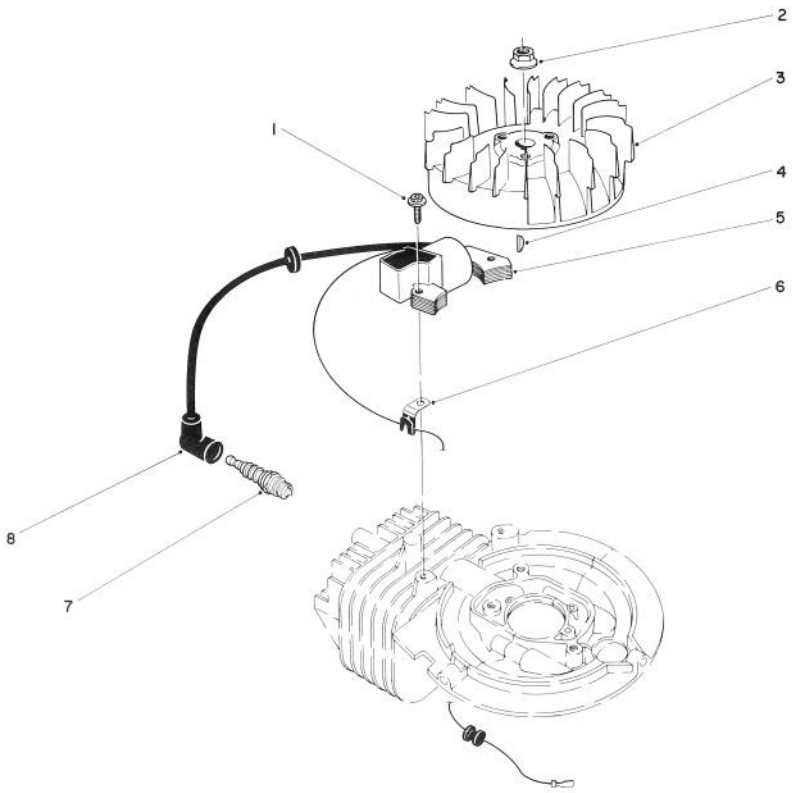

FLYWHEEL & MAGNETO ASSEMBLY

Ref. No.	Part No.	Description	No. Used
1	81-2050	Capscrew — Allenhead	2
2	81-1330	Nut	1
3	81-1980	Flywheel — Magneto	1
4	81-2180	Key — Flywheel	1
5	81-1990	Coil/Ignition Assembly	1

Ref. No.	Part No.	Description	No. Used
6	81-1480	Clamp	1
7	81-0181	Spark Plug	1
8	81-1500	Cover — Spark Plug	1
*	41-7650	Puller — Flywheel	1

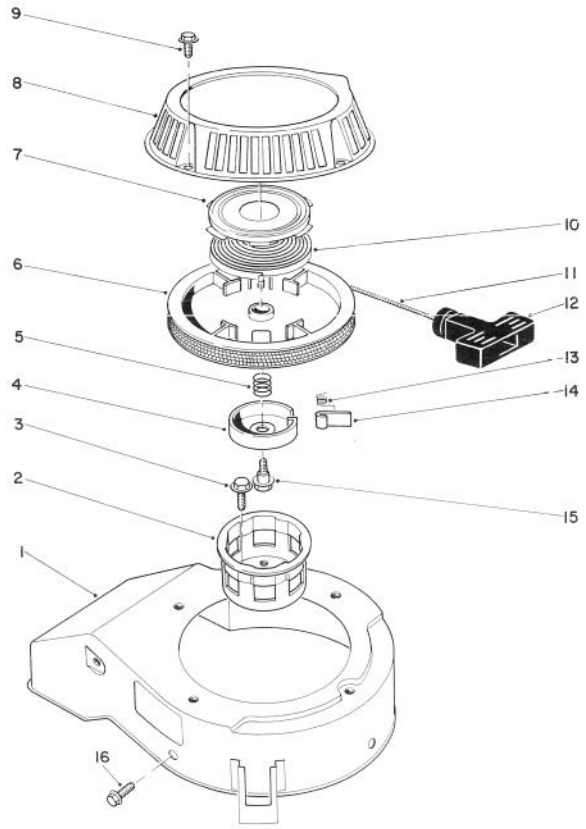

RECOIL ASSEMBLY

Ref. No.	Part No.	Description	No. Used
1	81-2070	Cover — Cooling Fan	1
2	81-1290	Pulley — Starter Cup	1
3	81-1300	Bolt (16mm Lg.)	3
4	81-1250	Retainer — Dog	1
5	81-1240	Spring — Compression	1
6	81-1210	Reel — Rope Pulley	1
7	81-1640	Retainer Cup — Recoil Spring	1
8	81-2090	Case — Recoil	1
9	81-1280	Bolt	4
10	81-1200	Spring — Recoil	1
11	81-1270	Rope	1

Ref. No.	Part No.	Description	No. Used
12	81-1630	Handle — Recoil	1
13	81-1220	Spring — Dog	1
14	81-1230	Dog	1
15	81-1260	Bolt — Shoulder	1
16	81-1170	Bolt — Self Tapping (15mm Lg.)	3
*	81-2040	Starter Assembly (Incl. Ref. #4-15)	1
*	81-2300	Spring & Retainer (Incl. Ref. #7 & 10)	1

*Not Illustrated

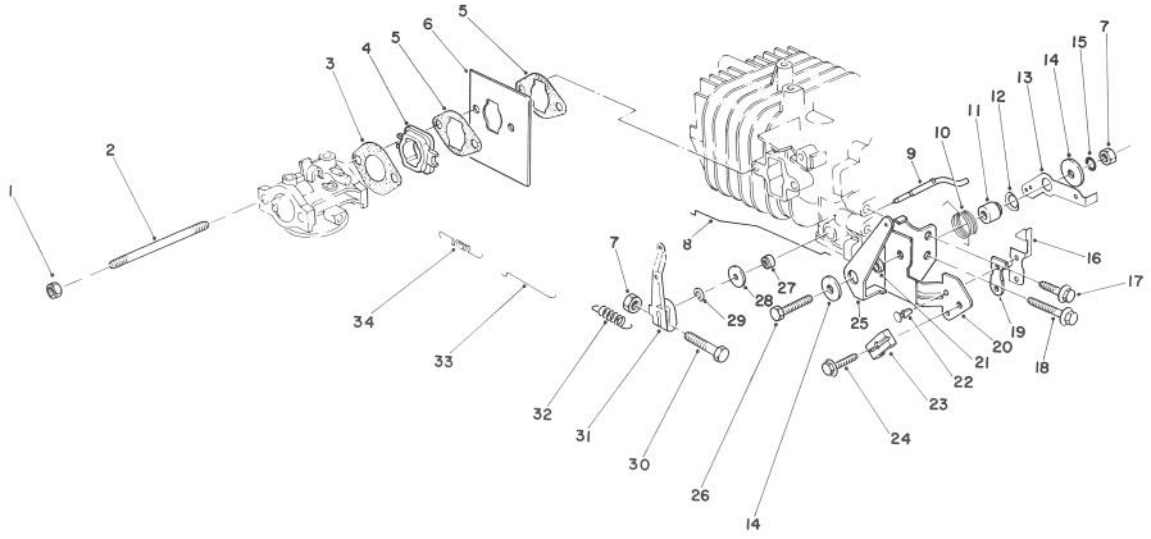

GOVERNOR ASSEMBLY

Ref. No.	Part No.	Description	No. Used
1	49-7810	Nut — Lock	2
2	81-2240	Stud Bolt — Carburetor	2
3	81-0780	Gasket — Carburetor	1
4	81-2190	Insulator — Carburetor	1
5	81-2320	Gasket — Shield	2
6	81-2330	Shield — Carburetor	1
7	81-0900	Nut	2
8	81-1720	Rod — Choke	1
9	81-0840	Shaft — Governor	1
10	81-1780	Spring — Choke Control Lever	1
11	81-1770	Spacer — Governor Spring Lever	1
12	81-1820	Washer — Gov. Spring Lever	1
13	81-1670	Level — Governor Spring	1
14	50-0760	Washer — Choke Control Lever	2
15	81-1450	Washer — Lock	1
16	81-1840	Terminal — Kill Switch	1
17	81-1170	Bolt — Self Tapping (15mm Lg.)	1

Ref. No.	Part No.	Description	No. Used
18	81-0540	Bolt (30mm Lg.)	1
19	81-1830	Insulator — Kill Switch	1
20	81-1680	Bracket — Throttle Control	1
21	81-1760	Spacer — Choke Control Lever	1
22	81-1850	Rivet — Kill Switch	2
23	81-1690	Clamp — Cable	1
24	50-0130	Bolt — Cable Clamp	1
25	81-1710	Lever — Choke Control	1
26	81-1730	Bolt — Throttle Control Bracket	1
27	81-0850	Oil Seal — Governor Shaft	1
28	81-0860	Washer	1
29	81-0870	E-Ring	1
30	81-0890	Bolt — Throttle Lever	1
31	81-0880	Lever — Throttle Control	1
32	81-1970	Spring — Governor	1
33	81-0910	Rod — Carburetor	1
34	81-0920	Spring — Carburetor Rod	1

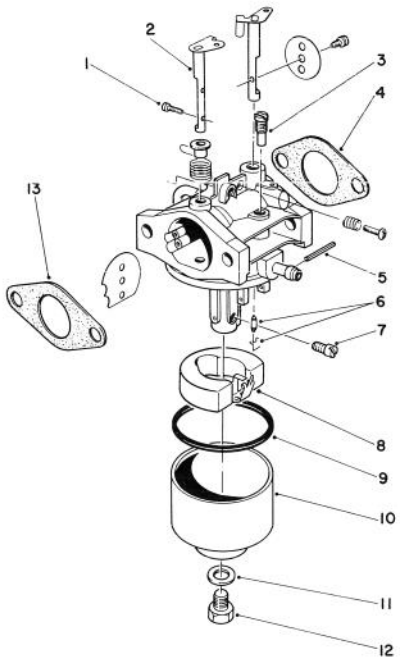

CARBURETOR ASSEMBLY

Ref. No.	Part No.	Description	No. Used
1	81-2160	Screw	2
2	81-1950	Shaft — Choke	1
3	81-1030	Jet — Pilot (40)	1
4	81-0780	Gasket	1
5	81-0980	Pin	1
6	81-1600	Needle Valve/Spring Wire	1
7	81-1940	Jet — Main (76.3)	1
	81-2340	Jet — Main (72.5) High Altitude, Above 6,000 Ft. (Optional)	1

Ref. No.	Part No.	Description	No. Used
8	81-0970	Float	1
9	81-1010	Gasket — Float Bowl	1
10	81-1610	Bowl — Float	1
11	81-1020	Gasket — Bowl Screw	1
12	81-1000	Screw — Bowl	1
13	81-0090	Gasket	1
*	81-1960	Carburetor Kit (Incl. Ref. #4,6,9,11&13)	1
*	81-1930	Carburetor Assembly Complete	1

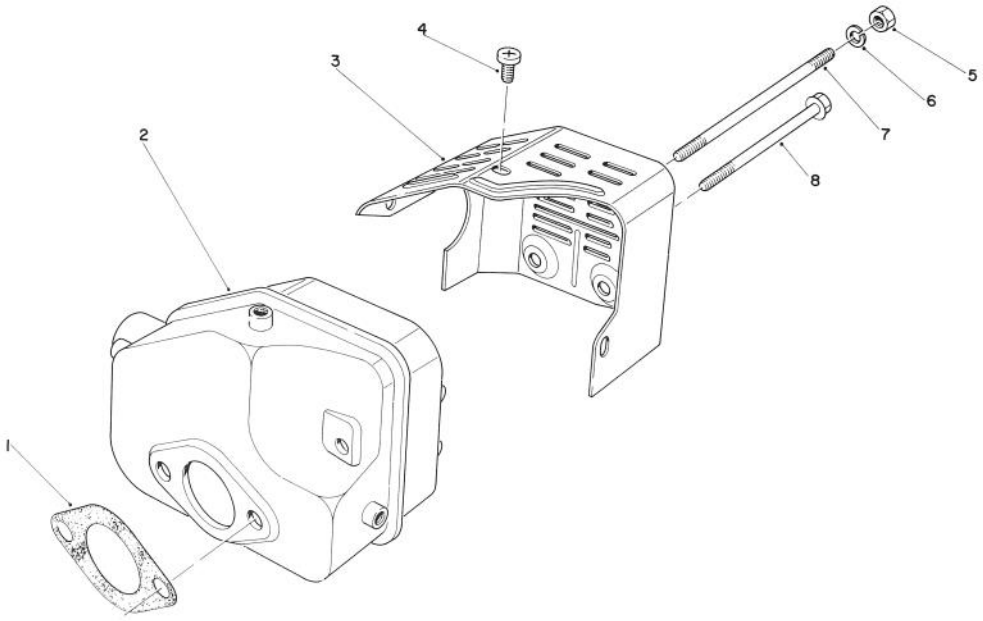

MUFFLER ASSEMBLY

Ref. No.	Part No.	Description	No. Used
1	81-1080	Gasket — Muffler	1
2	81-1090	Muffler	1
3	81-1130	Cover — Muffler	1
4	81-1140	Screw — Phillips Hd.	3
5	81-1110	Nut	2

Ref. No.	Part No.	Description	No. Used
6	81-1120	Washer — Lock	2
7	81-1100	Bolt	2
8	81-1150	Bolt — Self Tapping	1
*	81-0200	Spark Arrester	1

*Not Illustrated

PRODUCT CHANGES

In an effort to make improvements available to TORO owners as quickly as possible, minor changes are incorporated into Toro's products from time to time that do not become immediately shown in the Parts Catalog. If such a change apparently has been made in your unit, which is not reflected in your manual, see your TORO Distributor or his Authorized TORO Service Dealer for information and part numbers.

IDENTIFICATION AND ORDERING

MODEL AND SERIAL NUMBERS

The Mower has two identification numbers: a model number and a serial number. The two numbers are stamped on a decal which is located on the mower housing between the rear wheels. In any correspondence concerning the mower, supply model and serial numbers to assure that correct information and replacement parts are obtained.

To order replacement parts from an Authorized TORO Service Dealer, supply the following information:

1. Model and serial numbers of the mower.
2. Part number, description, and quantity of part(s) desired.

Note: Do not order by reference number if a parts catalog is being used; use the PART NUMBER.

The Toro Promise

A TWO YEAR LIMITED WARRANTY

The Toro Company promises to repair your TORO Product if defective in materials or workmanship. The following time periods from the date of purchase apply:

Residential Product ..... 2 Years
Residential Products Used Commercially ..... 45 Days

The costs of parts and labor are included, but the customer pays the transportation costs. Just return any residential product to an Authorized TORO Service Dealer or TORO Distributor.

Should you feel your TORO Product is defective and wish to rely on The Toro Promise, the following procedure is recommended:

1. Contact any Authorized TORO Service Dealer, TORO Master Service Dealer, or TORO Distributor (the Yellow Pages of your telephone directory is a good reference source).
2. He will either instruct you to return the product to him or recommend another Authorized TORO Service outlet which might be more convenient.
3. Bring the product along with your original sales slip, or other evidence of purchase date, to the service dealer.
4. The servicing dealer will inspect the unit, advise you whether the product is defective and, if so, make all repairs necessary to correct the defect without extra charge to you.

If for any reason you are dissatisfied with the dealer's analysis of the defect or the service performed, you may contact us.

Write:

TORO Consumer Service Department
8111 Lyndale Avenue South
Minneapolis, Minnesota 55420

The above remedy of product defects through repair by an Authorized TORO Service Dealer is the purchaser's sole remedy for any defect.

THERE IS NO OTHER EXPRESS WARRANTY. ALL IMPLIED WARRANTIES OF MERCHANTABILITY AND FITNESS FOR USE ARE LIMITED TO THE DURATION OF THE EXPRESS WARRANTY.

Some states do not allow limitations on how long an implied warranty lasts, so the above limitation may not apply to you.

This warranty applies only to parts or components which are defective and does not cover repairs necessary due to normal wear, misuse, accidents, or lack of proper maintenance. Regular, routine maintenance of the unit to keep it in proper operating condition is the responsibility of the owner.

All warranty repairs reimbursable under The Toro Promise must be performed by an Authorized TORO Service Dealer using Toro approved replacement parts.

Repairs or attemped repairs by anyone other than an Authorized TORO Service Account are not reimbursable under The Toro Promise. In addition, these unauthorized repair attempts may result in additional malfunctions, the correction of which is not covered by warranty.

THE TORO COMPANY IS NOT LIABLE FOR INDIRECT, INCIDENTAL OR CONSEQUENTIAL DAMAGES IN CONNECTION WITH THE USE OF THE PRODUCT INCLUDING ANY COST OR EXPENSE OF PROVIDING SUBSTITUTE EQUIPMENT OR SERVICE DURING PERIODS OF MALFUNCTION OR NON-USE.

Some states do not allow the exclusion or limitation of incidental or consequential damages, so the above limitation or exclusion may not apply to you.

This warranty gives you specific legal rights, and you may also have other rights which vary from state to state.

COUNTRIES OTHER THAN THE UNITED STATES OR CANADA

Customers who have purchased TORO products exported from the United States or Canada should contact their TORO Distributor (Dealer) to obtain guarantee policies for your country, province or state. If for any reason you are dissatisfied with your Distributor's service or have difficulty obtaining guarantee information, contact the TORO importer. If all other remedies fail, you may contact us at The Toro Company.

Litho in U.S.A.