Form No. 3350–295

Z587L

Z Master® with 60in TURBO FORCE™ Side Discharge Mower

Model No. 74250–240000001 & Up

Operator’s Manual

Register your product at www.Toro.com

Original Instructions (EN)

Warning

The engine exhaust from this product contains chemicals known to the State of California to cause cancer, birth defects, or other reproductive harm.

Because in some areas there are local, state, or federal regulations requiring that a spark arrester be used on the engine of this mower, a spark arrester is incorporated with the muffler assembly.

Important This engine is equipped with a spark arrester muffler. It is a violation of California Public Resource Code Section 4442 to use or operate this engine without a spark arrester muffler on any forest–covered, brush–covered or grass–covered land. Other states or federal areas may have similar laws.

This spark ignition system complies with Canadian ICES-002.

Ce système d'allumage par étincelle de véhicule est conforme à la norme NMB-002 du Canada.

The enclosed Engine Owner's Manual is supplied for information regarding The U.S. Environmental Protection Agency (EPA) and the California Emission Control Regulation of emission systems, maintenance and warranty.

Keep this engine Owner's Manual with your unit. Should this engine Owner's Manual become damaged or illegible, replace immediately. Replacements may be ordered through the engine manufacturer.

Contents

	Page
Introduction	3
Safety	3
Safe Operating Practices	3
Slope Chart	7
Safety and Instruction Decals	9
Gasoline and Oil	16
Recommended Gasoline	16
Using Stabilizer/Conditioner	16
Filling the Fuel Tank	16
Checking the Engine Oil Level	16
Operation	17
Using the Rollover Protection System (ROPS)	17
Think Safety First	18
Controls	19
Operating the Parking Brake	19
Starting and Stopping the Engine	20
Operating the Power Take Off (PTO)	21
The Safety Interlock System	21
Driving Forward or Backward	22
Stopping the Machine	22
Adjusting the Height-of-Cut	23
Using the Lift Assist Lever	23
Adjusting the Anti-Scalp Rollers	23
Adjusting the Flow Baffle	25
Positioning the Flow Baffle	25
Positioning the Seat	26
Unlatching the Seat	26
Pushing the Machine by Hand	26
Using the Side Discharge	27
Transporting the Machine	28
Loading Machines	28
Using the Z Stand	29
Tips for Mowing Grass	30
Maintenance	31
Recommended Maintenance Schedule	31
Servicing the Cutting Blades	32
Servicing the Air Cleaner	34
Servicing the Engine Oil	35
Servicing the Cooling System	36
Servicing the Spark Plug	37
Replacing the Fuel Filter	38
Draining The Fuel Tank	39
Servicing the Spark Arrester	39
Greasing and Lubrication	39
Greasing the Spindles	40
Checking the Tire Pressure	41
Servicing the Hydraulic System	41
Adjusting the Handle Neutral	43
Setting the Hydraulic Pump Neutral	44
Adjusting the Tracking	45
Adjusting the Caster Pivot Bearing	45
Checking the Wheel Hub Slotted Nut	46
Leveling the Mower at Three Positions	46
Cleaning Under the Deck	48
Inspecting the Belts	49
Replacing the Mower Belt	49
Adjusting the Mower Belt Tension	49
Replacing the Pump Drive Belt	50
Adjusting the Parking Brake	51
Servicing the Fuses	51
Servicing the Battery	52
Replacing the Grass Deflector	54
Waste Disposal	55
Mercury Tilt Switch	55
Mercury Tilt Switch Disposal	55

© 2003 by The Toro Company

8111 Lyndale Avenue South
Bloomington, MN 55420-1196

Contact us at www.Toro.com
All Rights Reserved
Printed in the USA

	Page
Wiring Diagram	56
Cleaning and Storage	57
Troubleshooting	58
The Toro Total Coverage Guarantee	60

Introduction

Read this manual carefully to learn how to operate and maintain your product properly. The information in this manual can help you and others avoid injury and product damage. Although Toro designs and produces safe products, you are responsible for operating the product properly and safely.

Whenever you need service, genuine Toro parts, or additional information, contact an Authorized Service Dealer or Toro Customer Service and have the model and serial numbers of your product ready. Figure 1 illustrates the location of the model and serial numbers on the product.

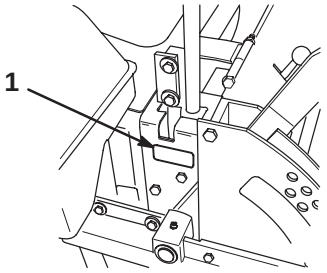

Figure 1

1. Location of the model and serial numbers

Write the product model and serial numbers in the space below:

Model No. _____

Serial No. _____

This manual identifies potential hazards and has special safety messages that help you and others avoid personal injury and even death. ***Danger***, ***Warning***, and ***Caution*** are signal words used to identify the level of hazard. However, regardless of the hazard, be extremely careful.

Danger signals an extreme hazard that *will* cause serious injury or death if you do not follow the recommended precautions.

Warning signals a hazard that *may* cause serious injury or death if you do not follow the recommended precautions.

Caution signals a hazard that may cause minor or moderate injury if you do not follow the recommended precautions.

This manual uses two other words to highlight information. **Important** calls attention to special mechanical information and **Note:** emphasizes general information worthy of special attention.

Safety

Improper use or maintenance by the operator or owner can result in injury. To reduce the potential for injury, comply with these safety instructions and always pay attention to the safety alert ⚠ symbol, which means CAUTION, WARNING, or DANGER—"personal safety instruction." Failure to comply with the instruction may result in personal injury or death.

This product is capable of amputating hands and feet and throwing objects. Always follow all safety instructions to avoid serious injury or death.

This product is designed for cutting and recycling grass or, when equipped with a grass bagger, for catching cut grass. Any use for purposes other than these could prove dangerous to user and bystanders.

Safe Operating Practices

The following instructions are from ANSI standard B71.4—1999.

Training

- Read the Operator's Manual and other training material. If the operator(s) or mechanic(s) can not read English it is the owner's responsibility to explain this material to them.
- Become familiar with the safe operation of the equipment, operator controls, and safety signs.
- All operators and mechanics should be trained. The owner is responsible for training the users.
- Never let children or untrained people operate or service the equipment. Local regulations may restrict the age of the operator.
- The owner/user can prevent and is responsible for accidents or injuries occurring to himself or herself, other people or property.

Preparation

- Evaluate the terrain to determine what accessories and attachments are needed to properly and safely perform the job. Only use accessories and attachments approved by the manufacturer.
- Wear appropriate clothing including hard hat, safety glasses and hearing protection. Long hair, loose clothing or jewelry may get tangled in moving parts.
- Inspect the area where the equipment is to be used and remove all objects such as rocks, toys and wire which can be thrown by the machine.
- Use extra care when handling gasoline and other fuels. They are flammable and vapors are explosive.
    - Use only an approved container
    - Never remove gas cap or add fuel with engine running. Allow engine to cool before refueling. Do not smoke.
    - Never refuel or drain the machine indoors.
- Check that operator's presence controls, safety switches and shields are attached and functioning properly. Do not operate unless they are functioning properly.

Operation

- Never run an engine in an enclosed area.
- Only operate in good light, keeping away from holes and hidden hazards.
- Be sure all drives are in neutral and parking brake is engaged before starting engine. Start the engine only from the operator's position.
- Never raise deck with the blades running.
- Never operate without the PTO shield, or other guards securely in place. Be sure all interlocks are functioning properly.
- Never operate with the discharge deflector raised, removed or altered, unless using a grass catcher.
- Do not change the engine governor setting or overspeed the engine.
- Stop on level ground, lower implements, disengage drives, engage parking brake, shut off engine before leaving the operator's position for any reason including emptying the catchers or unclogging the chute.
- Stop equipment and inspect blades after striking objects or if an abnormal vibration occurs. Make necessary repairs before resuming operations.
- Keep hands and feet away from the cutting units.
- Never carry passengers and keep pets and bystanders away.
- Be alert, slow down and use caution when making turns. Look behind and to the side before changing directions.
- Slow down and use caution when crossing roads and sidewalks. Stop blades if not mowing.
- Be aware of the mower discharge direction and do not point it at anyone.
- Do not operate the mower under the influence of alcohol or drugs.
- Use extreme care when loading or unloading the machine into a trailer or truck.
- Use care when approaching blind corners, shrubs, trees, or other objects that may obscure vision.

Slope Operation

- Do not mow slopes greater than 15 degrees.
- Do not mow near drop–offs, ditches, steep banks or water. Wheels dropping over edges can cause rollovers, which may result in serious injury, death or drowning.
- Do not mow slopes when grass is wet. Slippery conditions reduce traction and could cause sliding and loss of control.
- Do not make sudden turns or rapid speed changes.
- Use a walk behind mower and/or a hand trimmer near drop–offs, ditches, steep banks or water.
- Reduce speed and use extreme caution on slopes.
- Remove or mark obstacles such as rocks, tree limbs, etc. from the mowing area. Tall grass can hide obstacles.
- Watch for ditches, holes, rocks, dips, and rises that change the operating angle, as rough terrain could overturn the machine.
- Avoid sudden starts when mowing uphill because the mower may tip backwards.
- Be aware that loss of traction may occur going downhill. Weight transfer to the front wheels may cause drive wheels to slip and cause loss of braking and steering.
- Always avoid sudden starting or stopping on a slope. If tires lose traction, disengage the blades and proceed slowly off the slope.
- Follow the manufacturer's recommendations for wheel weights or counterweights to improve stability.

- Use extreme care with grass catchers or other attachments. These can change the stability of the machine and cause loss of control.

Using the Rollover Protection System (ROPS)

- Keep the roll bar in the raised and locked position and use the seat belt when operating the machine.
- Be certain that the seat belt can be released quickly in the event of an emergency.
- Be aware there is no rollover protection when the roll bar is down.
- Check the area to be mowed and never fold the ROPS in areas where there are slopes, drop offs or water.
- Lower the rollbar only when absolutely necessary. Do not wear the seat belt with the roll bar folded down.
- Check carefully for overhead clearances (i.e. branches, doorways, electrical wires) before driving under any objects and do not contact them.

Maintenance and storage

- Disengage drives, lower implement, set parking brake, stop engine and remove key or disconnect spark plug wire. Wait for all movement to stop before adjusting, cleaning or repairing.
- Clean grass and debris from cutting units, drives, mufflers, and engine to help prevent fires. Clean up oil or fuel spillage.
- Let engine cool before storing and do not store near flame.
- Shut off fuel while storing or transporting. Do not store fuel near flames or drain indoors.
- Park machine on level ground. Never allow untrained personnel to service machine.
- Use jack stands to support components when required.
- Carefully release pressure from components with stored energy.
- Disconnect battery or remove spark plug wire before making any repairs. Disconnect the negative terminal first and the positive last. Reconnect positive first and negative last.
- Use care when checking blades. Wrap the blade(s) or wear gloves, and use caution when servicing them. Only replace blades. Never straighten or weld them.
- Keep hands and feet away from moving parts. If possible, do not make adjustments with the engine running.
- Charge batteries in an open well ventilated area, away from spark and flames. Unplug charger before connecting or disconnecting from battery. Wear protective clothing and use insulated tools.
- Keep all parts in good working condition and all hardware tightened. Replace all worn or damaged decals.
- Use only Toro-approved attachments. Warranty may be voided if used with unapproved attachments.

Slope Chart

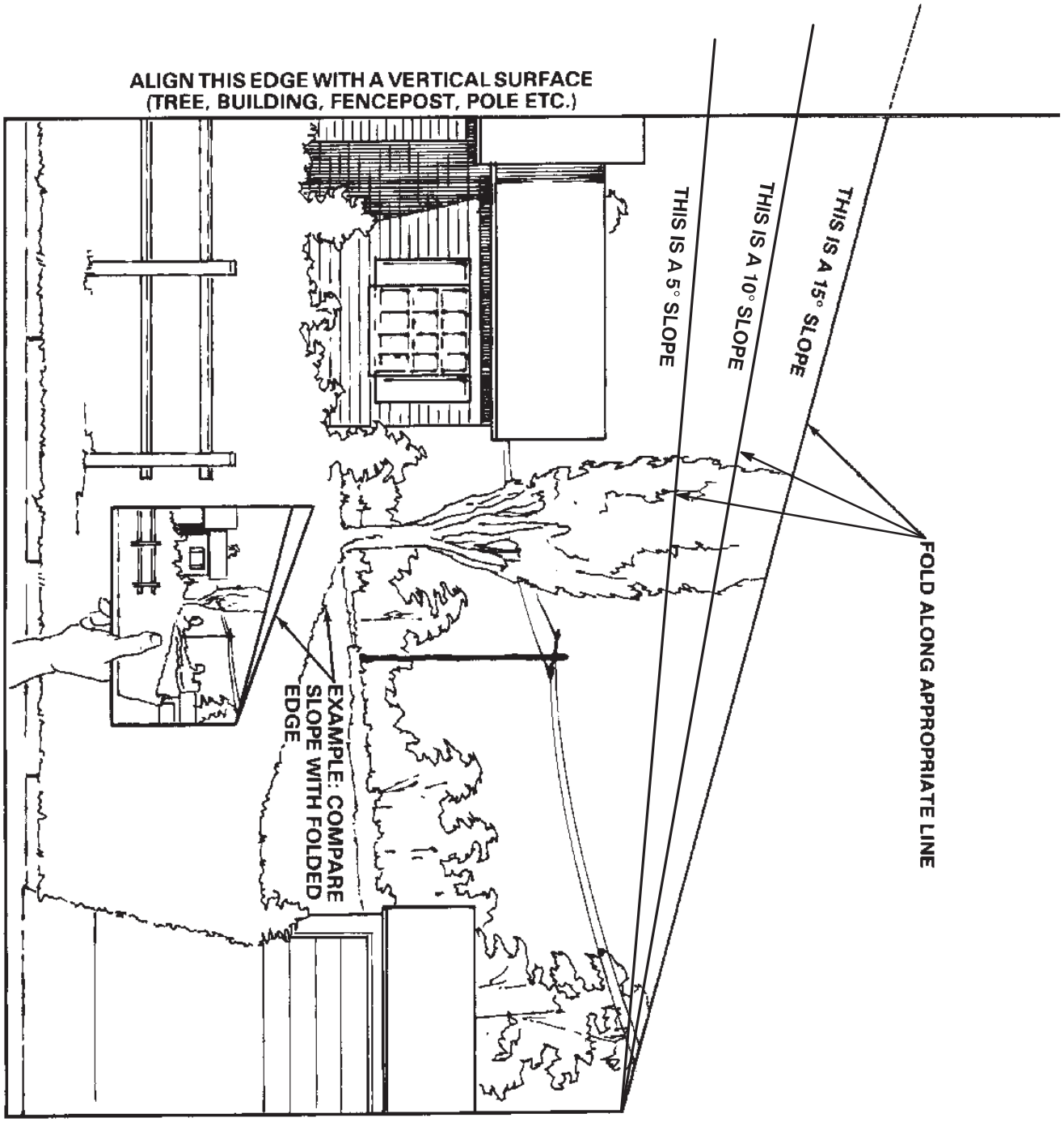
ALIGN THIS EDGE WITH A VERTICAL SURFACE
(TREE, BUILDING, FENCEPOST, POLE ETC.)
THIS IS A 5° SLOPE
THIS IS A 10° SLOPE
THIS IS A 15° SLOPE
FOLD ALONG APPROPRIATE LINE
EXAMPLE: COMPARE SLOPE WITH FOLDED EDGE

Safety and Instruction Decals

Safety decals and instructions are easily visible to the operator and are located near any area of potential danger. Replace any decal that is damaged or lost.

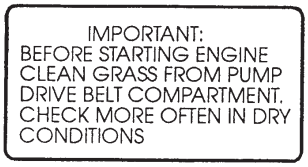

1-633462



103-1027

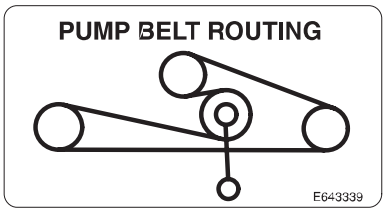

1-643339



1-523552

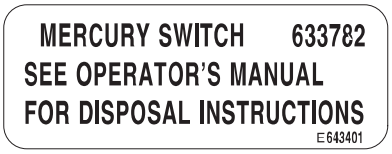

1-643401

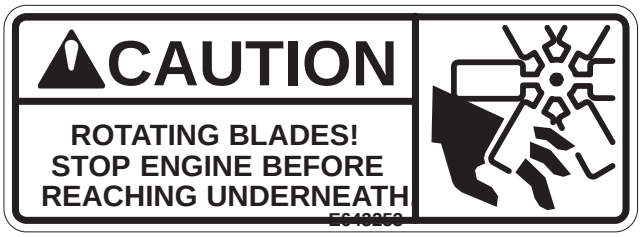

1-643253



43-8480



54-9220



58-6520

1. Grease



65-2690



66-1340



68-8340



98-4387

1. Warning—wear hearing protection.



98-5954



103-0368



104-7759



104-8569

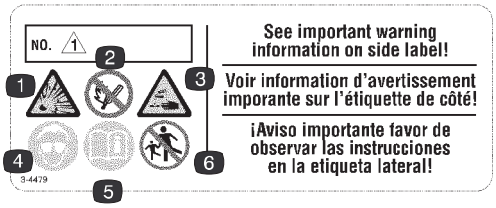

104-4163

1. Explosion hazard
2. No fire, open flames, or smoking.
3. Caustic liquid/chemical burn hazard
4. Wear eye protection
5. Read the *Operator's Manual.*
6. Keep bystanders a safe distance from the battery.

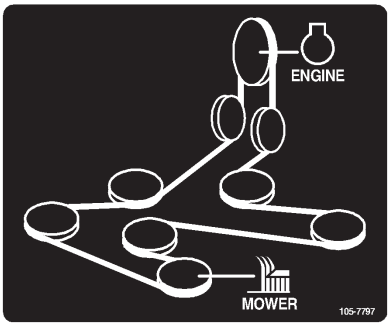

105-7797

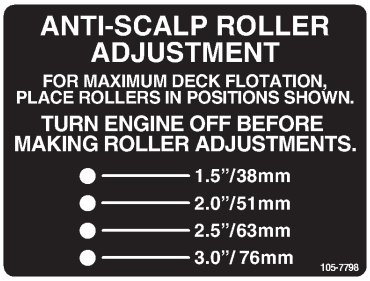

105-7798



107-1613



107-1864



107-2102

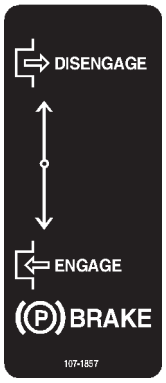

107-1857

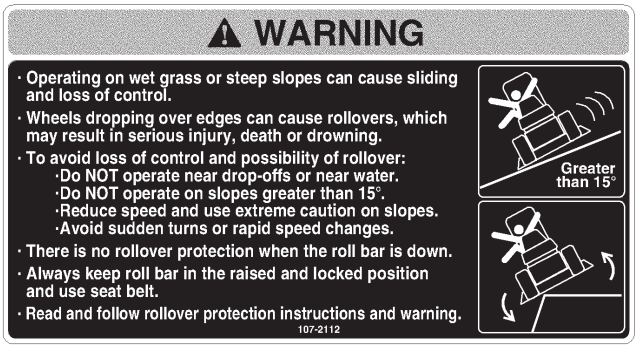

107-2112

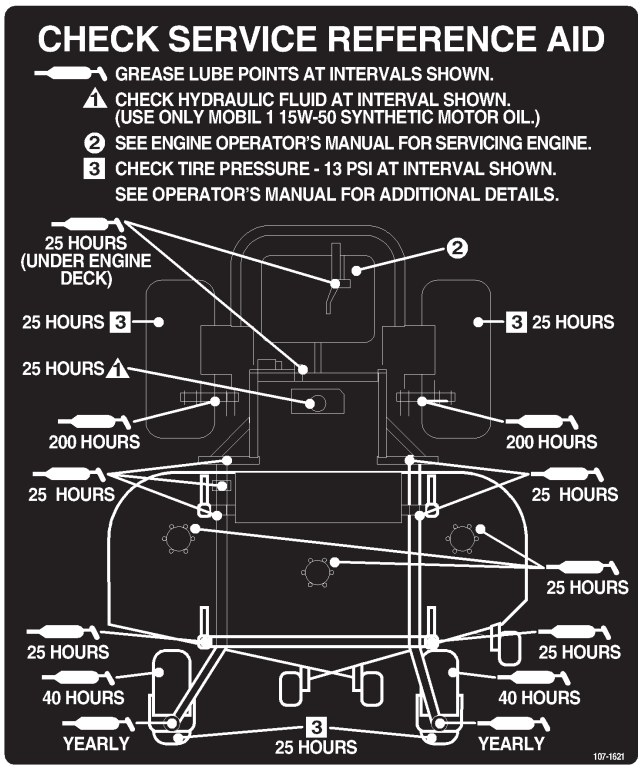

107-1621



104-2449

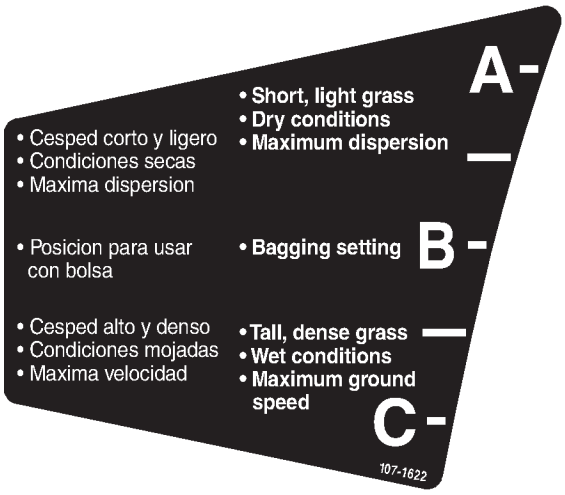

107-1622

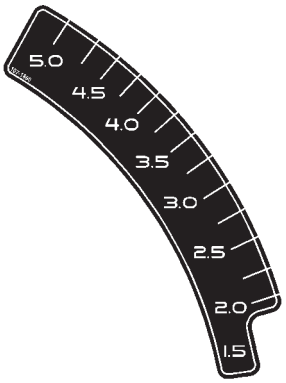

107-1860

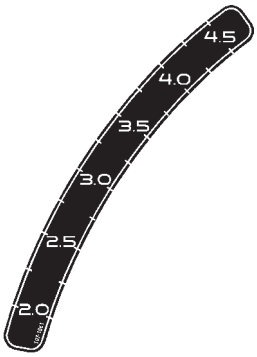

107-1861



106-9968



103-2433



106-9989

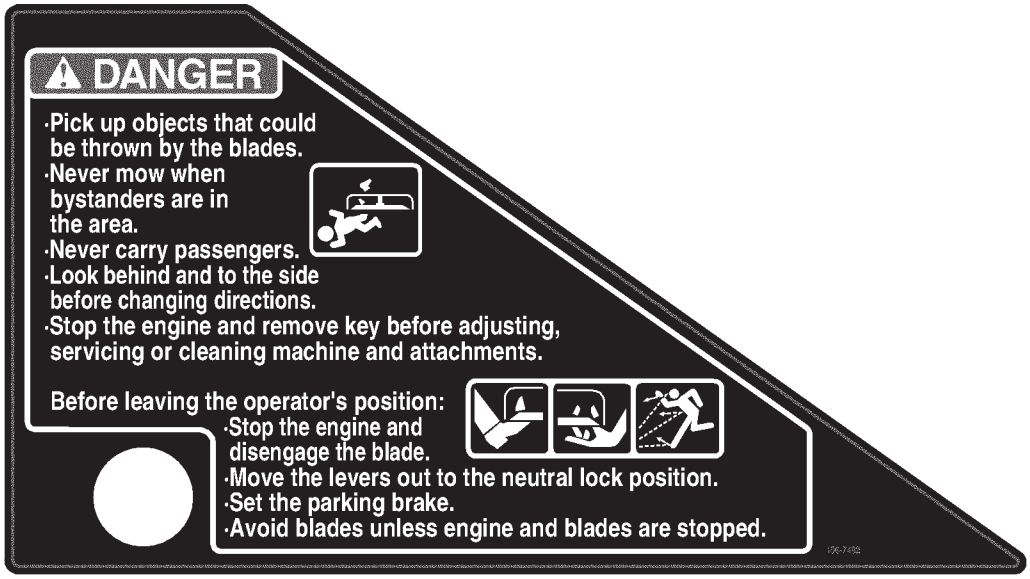

106-7492



104-4164

1. Contains lead; do not discard.
2. Recycle
3. Wear eye protection; explosive gases can cause blindness and other injuries
4. No sparks, flame, or smoking
5. Sulfuric acid can cause blindness or severe burns.
6. Flush eyes immediately with water and get medical help fast.
7. Maximum fill line
8. Minimum fill line
9. Instructions for activating the battery

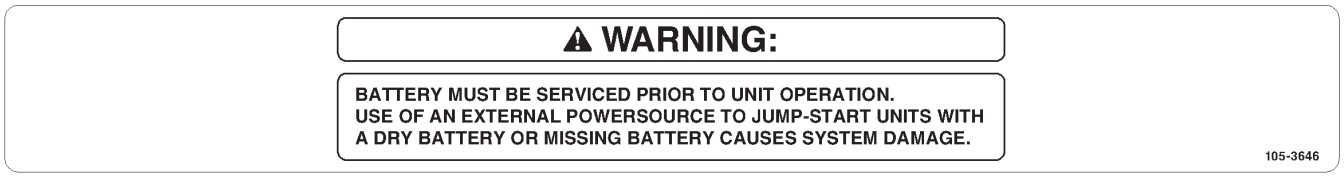

105-3646

Gasoline and Oil

Recommended Gasoline

Use UNLEADED Regular Gasoline suitable for automotive use (85 pump octane minimum). Leaded regular gasoline may be used if unleaded regular is not available.

Important Never use methanol, gasoline containing methanol, or gasohol containing more than 10% ethanol because the fuel system could be damaged. Do not mix oil with gasoline.

Danger

In certain conditions, gasoline is extremely flammable and highly explosive. A fire or explosion from gasoline can burn you and others and can damage property.

- **Fill the fuel tank outdoors, in an open area, when the engine is cold. Wipe up any gasoline that spills.**
- **Never fill the fuel tank inside an enclosed trailer.**
- **Do not fill the fuel tank completely full. Add gasoline to the fuel tank until the level is 1/4 to 1/2 inch (6 to 13 mm) below the bottom of the filler neck. This empty space in the tank allows gasoline to expand.**
- **Never smoke when handling gasoline, and stay away from an open flame or where gasoline fumes may be ignited by a spark.**
- **Store gasoline in an approved container and keep it out of the reach of children. Never buy more than a 30-day supply of gasoline.**
- **Always place gasoline containers on the ground away from your vehicle before filling.**
- **Do not fill gasoline containers inside a vehicle or on a truck or trailer bed because interior carpets or plastic truck bed liners may insulate the container and slow the loss of any static charge.**
- **When practical, remove gas–powered equipment from the truck or trailer and refuel the equipment with its wheels on the ground.**
- **If this is not possible, then refuel such equipment on a truck or trailer from a portable container, rather than from a gasoline dispenser nozzle.**
- **If a gasoline dispenser nozzle must be used, keep the nozzle in contact with the rim of the fuel tank or container opening at all times until fueling is complete.**

Warning

Gasoline is harmful or fatal if swallowed. Long–term exposure to vapors can cause serious injury and illness.

- **Avoid prolonged breathing of vapors.**
- **Keep face away from nozzle and gas tank or conditioner opening.**
- **Keep gas away from eyes and skin.**

Using Stabilizer/Conditioner

Use a fuel stabilizer/conditioner in the machine to provide the following benefits:

- Keeps gasoline fresh during storage of 90 days or less. For longer storage it is recommended that the fuel tank be drained.
- Cleans the engine while it runs
- Eliminates gum-like varnish buildup in the fuel system, which causes hard starting

Important Do not use fuel additives containing methanol or ethanol.

Add the correct amount of gas stabilizer/conditioner to the gas.

Note: A fuel stabilizer/conditioner is most effective when mixed with fresh gasoline. To minimize the chance of varnish deposits in the fuel system, use fuel stabilizer at all times.

Filling the Fuel Tank

1. Shut the engine off and set the parking brake.
2. Clean around each fuel tank cap and remove the cap. Add unleaded regular gasoline to both fuel tanks, until the level is 1/4 to 1/2 inch (6 to 13 mm) below the bottom of the filler neck. This space in the tank allows gasoline to expand. Do not fill the fuel tanks completely full.
3. Install fuel tank caps securely. Wipe up any gasoline that may have spilled.

Checking the Engine Oil Level

Before you start the engine and use the machine, check the oil level in the engine crankcase; refer to Checking the Oil Level, page 35.

Operation

Note: Determine the left and right sides of the machine from the normal operating position.

Using the Rollover Protection System (ROPS)

Warning

To avoid injury or death from rollover: keep the roll bar in the raised locked position and use the seat belt.

Ensure that the rear part of the seat is secured with the seat latch.

Warning

There is no rollover protection when the roll bar is in the down position.

- **Lower the roll bar only when absolutely necessary.**
- **Do not wear the seat belt when the roll bar is in the down position.**
- **Drive slowly and carefully.**
- **Raise the roll bar as soon as clearance permits.**
- **Check carefully for overhead clearances (i.e. branches, doorways, electrical wires) before driving under any objects and do not contact them.**

Important Lower the roll bar only when absolutely necessary.

1. To lower the roll bar, loosen the front handles (Fig. 4).
2. Remove the hairpin cotter pins and remove the two pins (Fig. 3).
3. Lower the the roll bar to the down position. There are two down positions. See Figure 2 for the positions.
4. Install the two pins and secure them with the hairpin cotter pins (Fig. 3).

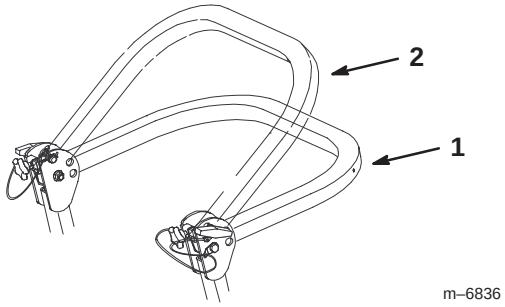

Figure 2

1. Full down position
2. Down position with bagger installed

Important Always use the seat belt with the roll bar in the raised position.

Important Ensure that the rear part of the seat is secured with the seat latch.

5. To raise the roll bar, remove the hairpin cotter pins and remove the two pins (Fig. 3).
6. Raise the roll bar to the upright position and install the two pins and secure them with the hairpin cotter pins (Fig. 3).

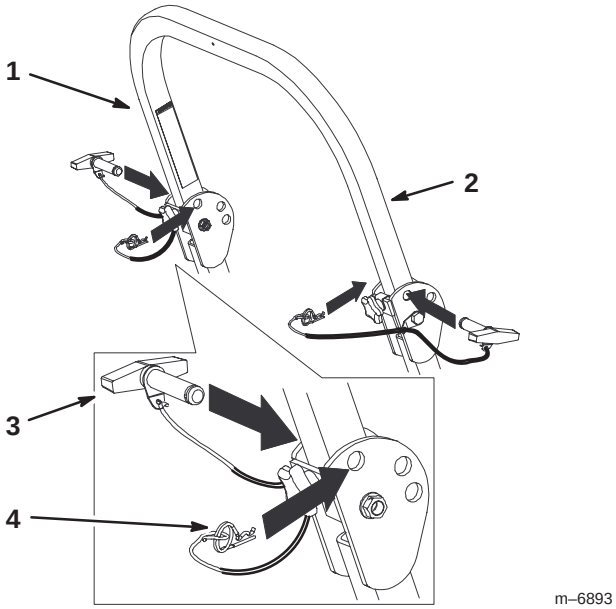

Figure 3

1. Roll bar
2. Raised position
3. Pin
4. Hairpin cotter pin

7. Tighten the front handles against the center roll bar ends (Fig. 3).

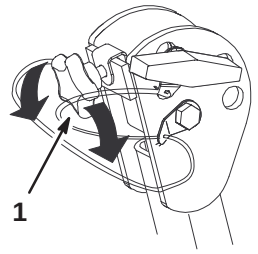

Figure 4

1. Front handle

Think Safety First

Please read all safety instructions and symbols in the safety section. Knowing this information could help you or bystanders avoid injury.

Danger

Operating on wet grass or steep slopes can cause sliding and loss of control.

Wheels dropping over edges can cause rollovers, which may result in serious injury, death or drowning.

There is no rollover protection when the roll bar is down.

Always keep the roll bar in the raised and locked position and use the seat belt.

Read and follow the rollover protection instructions and warnings.

To avoid loss of control and possibility of rollover:

- **Do not operate near drop–offs or near water.**
- **Do not operate on slopes greater than 15 degrees.**
- **Reduce speed and use extreme caution on slopes.**
- **Avoid sudden turns or rapid speed changes.**

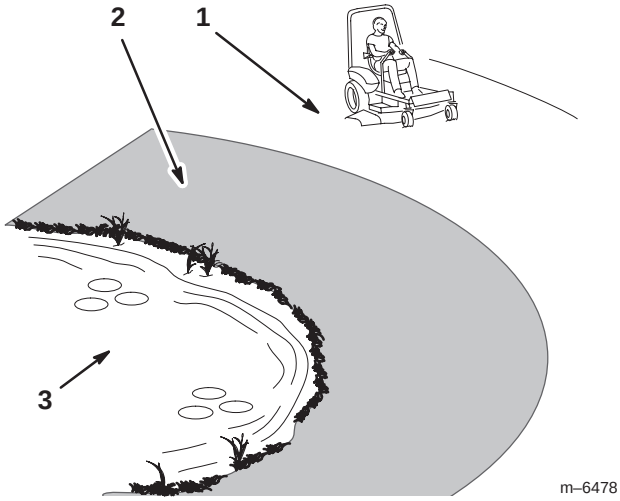

Figure 5

1. Safe Zone—use the Z Master here on slopes less than 15 degrees or flat areas.
2. Use walk behind mower and/or hand trimmer near drop–offs and water.
3. Water

Caution

This machine produces sound levels in excess of 85 dBA at the operators ear and can cause hearing loss through extended periods of exposure.

Wear hearing protection when operating this machine.



Figure 6

1. Warning—wear hearing protection.

The use of protective equipment for eyes, ears, feet and head is recommended.

Controls

Become familiar with all the controls before you start the engine and operate the machine (Figures 7 and 8).

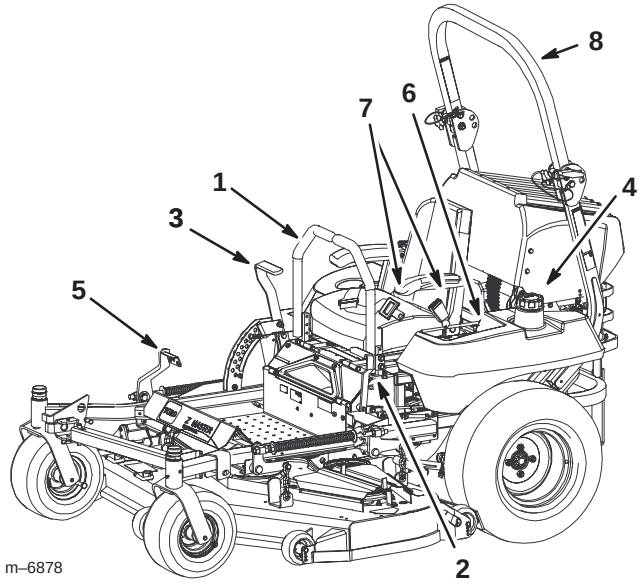

Figure 7

1. Motion control lever
2. Parking brake lever
3. Height-of-cut lever
4. Fuel cap
5. Lift assist lever
6. Controls
7. Seat belt
8. Roll bar

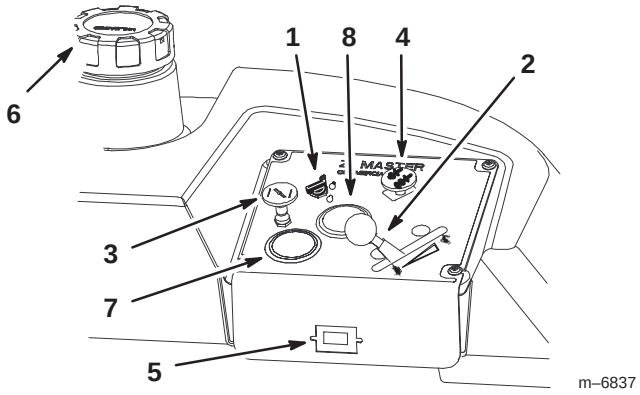

Figure 8

1. Ignition switch
2. Throttle
3. Choke
4. Power take off (PTO)
5. Hour meter
6. Gas cap
7. Volt meter
8. Temperature gauge

Using the Hour Meter

The hour meter records the number of hours the engine has operated. It operates when the engine is running. Use these times for scheduling regular maintenance.

Unlatch the seat and lift it up to view the hour meter (Fig. 8).

Using the Temperature Gauge

The temperature gauge registers the temperature of the coolant in the cooling system (Fig. 8).

Using the Volt Meter

The volt meter registers the output of the charging system (Fig. 8).

Operating the Parking Brake

Always set the parking brake when you stop the machine or leave it unattended.

Setting the Parking Brake

1. Move the motion control levers (Fig. 7) out to the neutral lock position.
2. Pull back and up on the parking brake lever to set the parking brake (Fig. 9). The parking brake lever should stay firmly in the Engaged position.

Warning

Parking brake may not hold machine parked on a slope and could cause personal injury or property damage.

Do not park on slopes unless wheels are chocked or blocked

Releasing the Parking Brake

Push forward and down on the parking brake lever to release the parking brake (Fig. 9). The parking brake is disengaged and the lever rests against the brake stop.

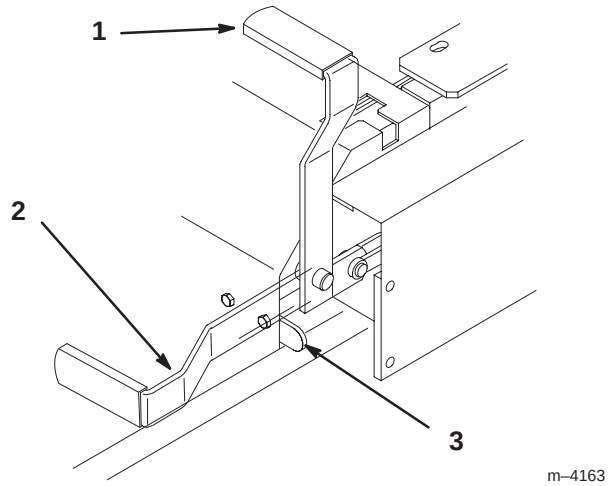

m–4163

Figure 9

1. Parking brake—ON
2. Parking brake—OFF
3. Brake stop

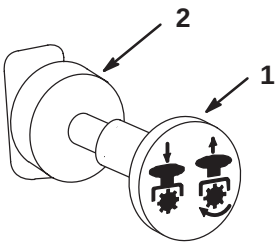

m–4201

Figure 10

1. PTO—On
2. PTO—Off

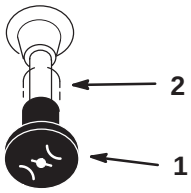

m–2719

Figure 11

1. Choke—On
2. Choke—Off

Starting and Stopping the Engine

Starting the Engine

1. Sit on the seat and move the motion controls to the neutral locked position.

2. Set the parking brake; refer to Setting the Parking Brake, page 19.

3. Move the PTO (power take off) switch to the off position (Fig. 10).

4. Move the choke control to the on position before starting a cold engine (Fig. 11).

Note: A warm or hot engine may not require choking. After the engine starts, move the choke control to the Run position.

5. Move the throttle control to the fast position before starting a cold engine (Fig. 12).

6. Turn the ignition key to the start position to energize the starter. When the engine starts, release the key (Fig. 13).

Important Do not engage the starter for more than 10 seconds at a time. If the engine fails to start, allow a 30 second cool-down period between attempts. Failure to follow these instructions can burn out the starter motor.

7. After the engine starts, move the choke to Off (Fig. 11). If the engine stalls or hesitates, move the choke back to On for a few seconds. Then move the throttle lever to the desired setting. Repeat this as required.

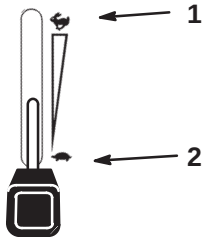

m–2720

Figure 12

1. Throttle—Fast
2. Throttle—Slow

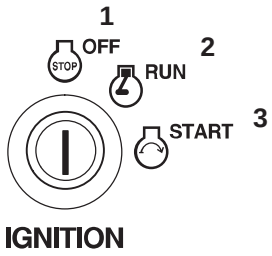

M–4268

Figure 13

1. Off
2. Run
3. Start

Stopping the Engine

1. Push the PTO to the off position (Fig. 12).

2. Move the throttle lever midway between the slow and fast positions (Fig. 12).

3. Let the engine idle for 60 seconds (Fig. 13).

4. Turn the ignition key to the off position (Fig. 13).

5. Remove the key to prevent possibility of someone accidentally starting the machine before transporting or storing machine.

6. Close fuel shut off valve before transporting or storing the machine.

Important Make sure that the fuel shut off valve is closed before transporting or storing the machine, as fuel leakage may occur. Set the parking brake before transporting.

Important Make sure to remove the key as the fuel pump may run and cause the battery to lose charge.

Caution

Children or bystanders may be injured if they move or attempt to operate the tractor while it is unattended.

Always remove the ignition key and set the parking brake when leaving the machine unattended, even if just for a few minutes.

Operating the Power Take Off (PTO)

The power take off (PTO) switch engages and disengages power to the electric clutch.

Engaging the PTO

1. While seated in the seat, release the pressure on the traction control levers and place in neutral.
2. Place the throttle in the fast position.
3. Pull out on the power take off (PTO) switch to engage it (Fig. 14).

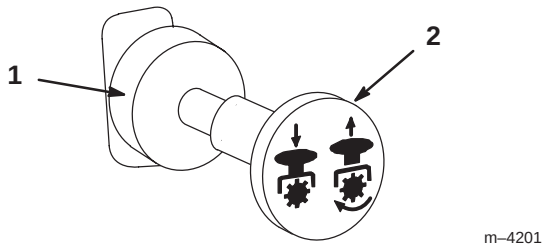

Figure 14

1. PTO—Off
2. PTO—On

Disengaging the PTO

To disengage, push the PTO switch to the Off position (Fig. 14).

The Safety Interlock System

Caution

If safety interlock switches are disconnected or damaged the machine could operate unexpectedly causing personal injury.

- **Do not tamper with the interlock switches.**
- **Check the operation of the interlock switches daily and replace any damaged switches before operating the machine.**

Understanding the Safety Interlock System

The safety interlock system is designed to prevent the engine from starting unless:

- You are sitting on the seat.
- The parking brake is engaged.
- The power take off (PTO) is disengaged.
- The motion control levers are in the neutral locked position.

The safety interlock system also is designed to stop the engine when the traction controls are moved from the locked position with the parking brake on **engaged** or if you rise from the seat when the PTO is **on** or engaged.

Testing the Safety Interlock System

Test the safety interlock system before you use the machine each time. If the safety system does not operate as described below, have an Authorized Service Dealer repair the safety system immediately.

1. Sitting on the seat, engage the parking brake, and move the PTO On. Try starting the engine; the engine should not crank.
2. Sitting on the seat, engage the parking brake, and move the PTO to Off. Move either motion control lever (out of neutral locked position). Try starting the engine; the engine should not crank. Repeat for the other control lever.
3. Sitting on the seat, engage the parking brake, move the PTO to Off, and lock the motion control levers in neutral. Now start the engine. While the engine is running, release the parking brake, engage the PTO, and rise slightly from the seat; the engine should stop.
4. Sitting on the seat, engage the parking brake, move the PTO to Off, and lock the motion control levers in to neutral. Now start the engine. While the engine is running, center either motion control and move (forward or reverse); the engine should stop. Repeat for the other motion control.

5. Sitting on the seat, disengage the parking brake, move the PTO switch to Off, and move the motion control levers to the neutral lock position. Try starting the engine; the engine should not crank.

Driving Forward or Backward

The throttle control regulates the engine speed as measured in RPM (revolutions per minute). Place the throttle control in the Fast position for best performance. Always operate in the full throttle position when mowing.

Caution

Machine can spin very rapidly. Operator may lose control of machine and cause personal injury or damage to machine.

- **Use caution when making turns.**
- **Slow the machine down before making sharp turns.**

Driving Forward

1. Release the parking brake; refer to Releasing the Parking Brake, page 19.
2. Move the levers to the center, unlocked position.
3. To go forward, slowly push the motion control levers forward (Fig. 15).

Note: The engine will kill if the traction control levers are moved with the parking brake engaged.

To go straight, apply equal pressure to both motion control levers (Fig. 15).

To turn, move the motion control lever toward neutral in the direction you want to turn (Fig. 15).

The farther you move the traction control levers in either direction, the faster the machine will move in that direction.

To stop, pull the motion control levers to neutral.

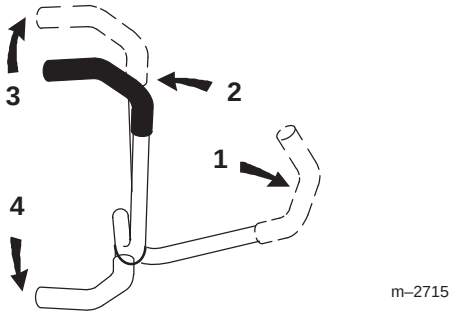

Figure 15

1. Motion control lever—neutral lock position
2. Center unlock position
3. Forward
4. Backward

Driving Backward

1. Move the levers to the center, unlocked position.
2. To go backward, slowly pull the motion control levers rearward (Fig. 15).

To go straight, apply equal pressure to both motion control levers (Fig. 15).

To turn, release pressure on the motion control lever toward the direction you want to turn (Fig. 15).

To stop, push the motion control levers to neutral.

Stopping the Machine

To stop the machine, move the traction control levers to neutral and move to locked position, disengage the power take off (PTO), and turn the ignition key to the off position. Also set the parking brake when you leave the machine; refer to Setting the Parking Brake, page 19. Remember to remove the key from the ignition switch.

Caution

Children or bystanders may be injured if they move or attempt to operate the tractor while it is unattended.

Always remove the ignition key and set the parking brake when leaving the machine unattended, even if just for a few minutes.

Adjusting the Height-of-Cut

The height-of-cut is adjusted from 1-1/2 to 5 inch (38 to 127 mm) in 1/4 inch (6 mm) increments by relocating clevis pin into different hole locations.

1. Raise the height-of-cut lever to the transport position (also the 5 inch (127 mm) cutting height position) (Fig. 16).
2. To adjust, remove the clevis pin from the height-of-cut bracket (Fig. 16).
3. Select a hole in height-of-cut bracket corresponding to the height-of-cut desired and, insert the clevis pin (Fig. 16).
4. Move the lever to the selected height.

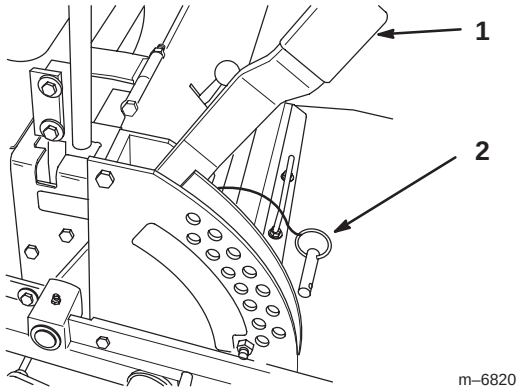

Figure 16

1. Height of cut lever
2. Clevis Pin

Using the Lift Assist Lever

The lift assist lever is used along with the height-of-cut lever for raising the deck. This allows for easier raising of the deck.

1. Place your foot onto the lift assist lever.
2. Press on the lift assist while pulling up on the height-of-cut lever (Fig. 17).

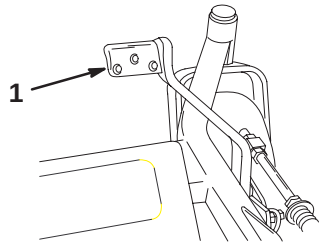

Figure 17

1. Lift assist lever

Adjusting the Anti-Scalp Rollers

Whenever you change the height-of-cut, it is recommended to adjust the height of the anti-scalp rollers.

1. Disengage the power take off (PTO) and turn the ignition key to off. Move levers to neutral locked position and apply the parking brake. Remove the key.
2. After adjusting the height-of-cut, adjust the rollers by removing the flange nut, bushing, spacer, and bolt (Figures 18, 19 and 20).

Note: The two middle rollers will not have a spacer (Fig. 19).

3. Select a hole so the anti–scalp roller is positioned to the (Figures 18, 19 and 20).
4. Install the flange nut bushing, spacer, and bolt. Torque to 40–45 ft–lb (54–61 N' m) (Figures 18, 19 and 20).
5. Repeat this adjustment on the other anti–scalp rollers.

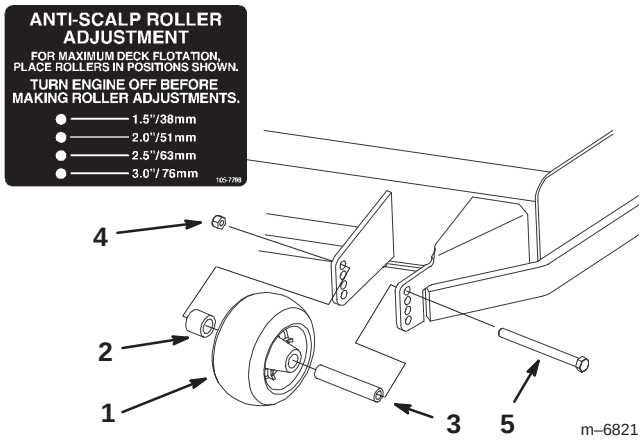

Figure 18

1. Anti–scalp roller
2. Spacer
3. Bushing
4. Flange Nut
5. Bolt

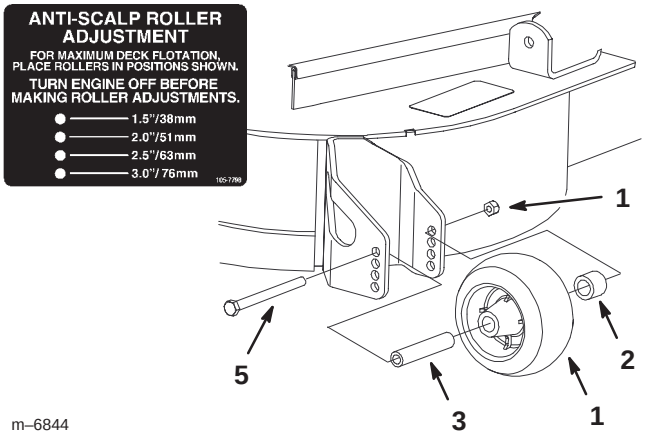

Figure 20

1. Anti–scalp roller
2. Spacer
3. Bushing
4. Flange Nut
5. Bolt

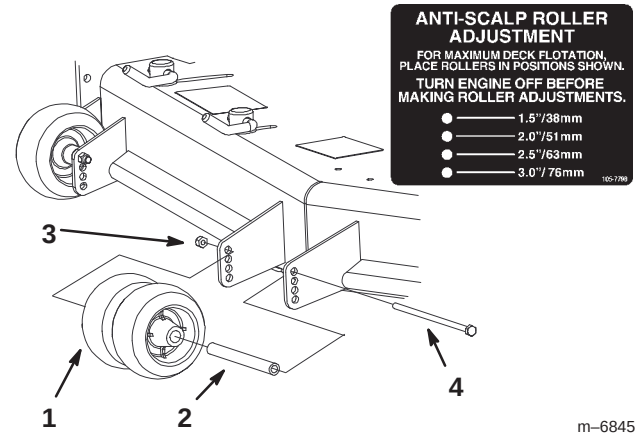

Figure 19

1. Anti–scalp roller
2. Bushing
3. Flange Nut
4. Bolt

Adjusting the Flow Baffle

The mower discharge flow can be adjusted for different types of mowing conditions. Position the cam locks and baffle to give the best quality of cut.

1. To adjust the cam locks, swing the lever up to loosen the cam lock (Fig. 21).
2. Adjust the baffle and cam locks in the slots to the desired discharge flow.
3. Swing the lever back over to tighten the baffle and cam locks (Fig. 21).
4. If the cams do not lock the baffle into place or it is too tight, loosen the lever and then rotate the cam lock. Adjust the cam lock until the desired locking pressure is achieved (Fig. 21).

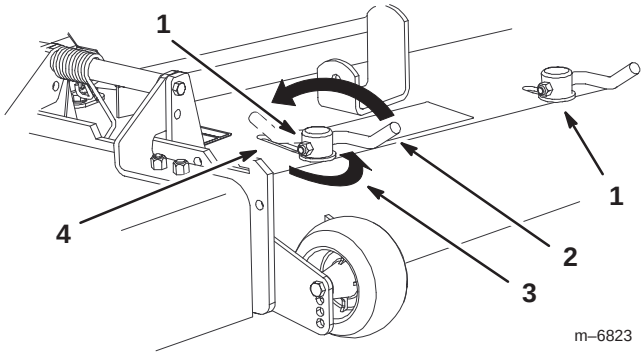

Figure 21

1. Cam lock
2. Lever
3. Rotate cam to increase or decrease locking pressure
4. Slot

Positioning the Flow Baffle

The following figures are only recommendations for use. Adjustments will vary by grass type, moisture content, and height of grass.

Note: If the engine power draws down and the mower ground speed is the same, open up the baffle.

Position A

This is the full rear position. The suggested use for this position is a follows.

- Use for short, light grass mowing conditions.
- Use in dry conditions.
- For smaller grass clippings.
- Propels grass clippings farther away from the mower.

Full Rearward Position

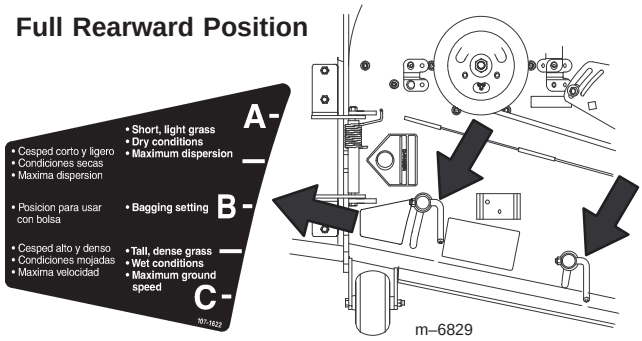

Figure 22

Position B

Use this position when bagging.

Middle Position

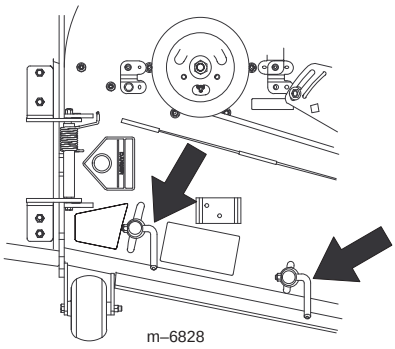

Figure 23

Position C

This is the full open position. The suggested use for this position is as follows.

- Use in tall, dense grass mowing conditions.
- Use in wet conditions.
- Lowers the engine power consumption.
- Allows increased ground speed in heavy conditions.
- This position is similar to the benefits of the Toro SFS mower.

Full Forward Position

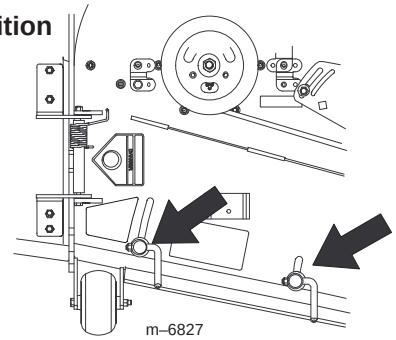

Figure 24

Positioning the Seat

The seat can move forward and backward. Position the seat where you have the best control of the machine and are most comfortable.

1. To adjust, move the lever sideways to unlock the seat (Fig. 25).

2. Slide the seat to the desired position and release the lever to lock it in position.

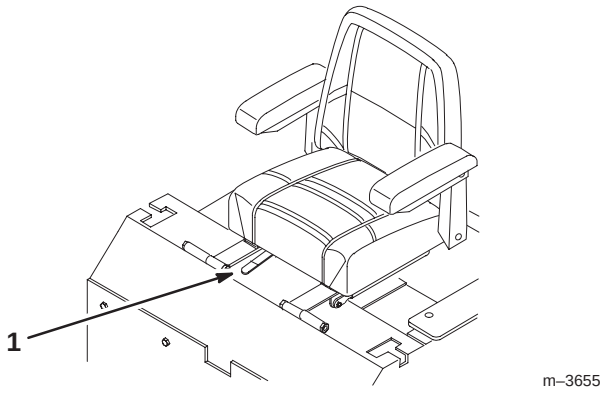

Figure 25

1. Adjustment lever

Unlatching the Seat

Push the seat latch rearward to unlatch the seat. This will allow access to the machine under the seat.

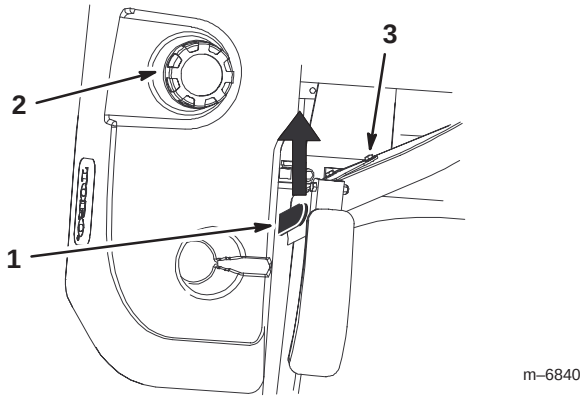

Figure 26

1. Seat latch
2. Gas cap
3. Seat

Pushing the Machine by Hand

Important Always push the machine by hand. Never tow the machine because hydraulic damage may occur.

To Push the Machine

1. Disengage the power take off (PTO) and turn the ignition key to Off. Move the levers to the neutral locked position and apply the parking brake.

2. Rotate the by-pass valves counterclockwise 1 turn to push. This allows hydraulic fluid to by-pass the pump enabling the wheels to turn (Fig. 27).

Important Do not rotate the by-pass valves more than 1 turn. This prevents the valves from coming out of the body and causing fluid to run out.

3. Disengage the parking brake before pushing.

Changing to Machine Operation

Rotate the by-pass valves clockwise 1 turn to operate the machine (Fig. 27).

Note: Do not over tighten the by–pass valves.

Note: The machine will not drive unless the by-pass valves are turned in.

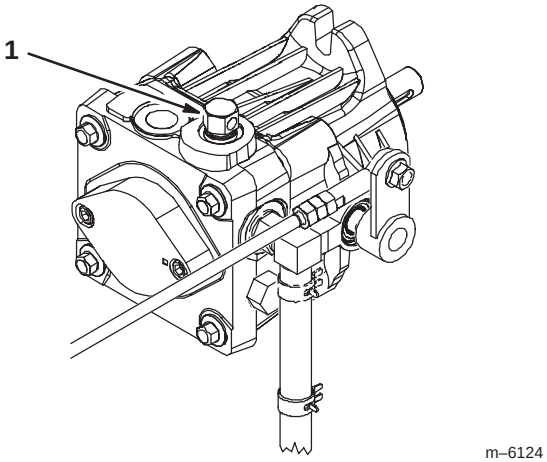

Figure 27

1. By-pass valve

Using the Side Discharge

The mower has a hinged grass deflector that disperses clippings to the side and down toward the turf.

Danger

Without the grass deflector, discharge cover, or complete grass catcher assembly mounted in place, you and others are exposed to blade contact and thrown debris. Contact with rotating mower blade(s) and thrown debris will cause injury or death.

- **Never remove the grass deflector from the mower because the grass deflector routes material down toward the turf. If the grass deflector is ever damaged, replace it immediately.**
- **Never put your hands or feet under the mower.**
- **Never try to clear the discharge area or mower blades unless you move the power take off (PTO) to the off position, rotate the ignition key to off and remove the key.**
- **Make sure the grass deflector is in the down position.**

Transporting the Machine

Use a heavy-duty trailer or truck to transport the machine. Ensure that the trailer or truck has all necessary lighting and marking as required by law. Please carefully read all the safety instructions. Knowing this information could help you, your family, pets, or bystanders avoid injury.

To transport the machine:

- Lock the brake and block the wheels
- Securely fasten the machine to the trailer or truck with straps, chains, cable, or ropes.
- Secure a trailer to the towing vehicle with safety chains.

Warning

Driving on street or roadway without turn signals, lights, reflective markings, or a slow moving vehicle emblem is dangerous and can lead to accidents causing personal injury.

Do not drive machine on a public street or roadway.

Loading Machines

Use extreme caution when loading units on trailers or trucks. One full width ramp that is wide enough to extend beyond the rear tires is recommended instead of individual ramps for each side of the unit (Fig. 28). The lower rear section of the tractor frame extends back between the rear wheels and serves as a stop for tipping backward. Having a full width ramp provides a surface for the frame members to contact if the unit starts to tip backward. If it is not possible to use one full width ramp, use enough individual ramps to simulate a full width continuous ramp.

The ramp should be long enough so that the angles do not exceed 15 degrees (Fig. 28). A steeper angle may cause mower deck components to get caught as the unit moves from ramp to trailer or truck. Steeper angles may also cause the unit to tip backward. If loading on or near a slope, position the trailer or truck so it is on the down side of the slope and the ramp extends up the slope. This will minimize the ramp angle. The trailer or truck should be as level as possible.

Important **Do Not** attempt to turn the unit while on the ramp; you may lose control and drive off the side.

Avoid sudden acceleration when driving up a ramp and sudden deceleration when backing down a ramp. Both maneuvers can cause the unit to tip backward.

Warning

Loading a unit onto a trailer or truck increases the possibility of backward tip–over and could cause serious injury or death.

- **Use extreme caution when operating a unit on a ramp.**
- **Use only a single, full width ramp; DO NOT use individual ramps for each side of the unit.**
- **If individual ramps must be used, use enough ramps to create an unbroken ramp surface wider than the unit.**
- ***Do not* exceed a 15 degrees angle between ramp and ground or between ramp and trailer or truck.**
- **Avoid sudden acceleration while driving unit up a ramp to avoid tipping backward.**
- **Avoid sudden deceleration while backing unit down a ramp to avoid tipping backward.**

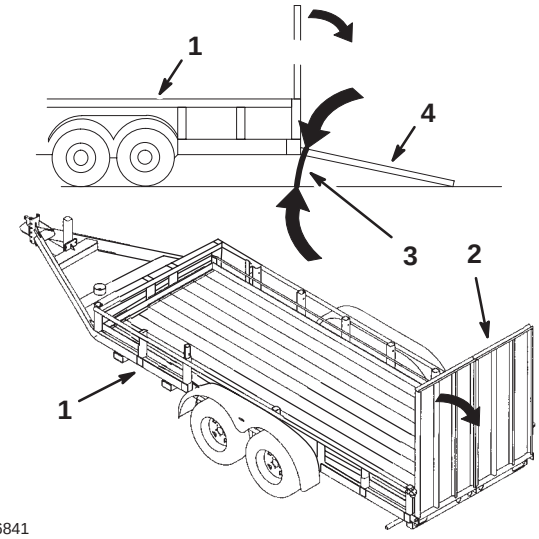

Figure 28

1. Trailer
2. Full width ramp
3. Not greater than 15 degrees
4. Full width ramp—side view

Using the Z Stand

The Z Stand® is used for raising the front end of the machine. This allows for cleaning of the deck and removal of the blades.

Warning

Unit could fall onto someone and cause serious injury or death.

- **Use extreme caution when operating unit on Z Stand.**
- **Use only for cleaning mower and removing blades.**
- **Do not keep unit on Z Stand for extended periods of time.**
- **Always turn the engine off, set the parking brake and remove the key before performing any maintenance to mower.**

Driving up onto the Z Stand

Important Use the Z Stand on a level surface.

1. Raise deck to transport position.
2. Remove bracket pin (Fig. 29).

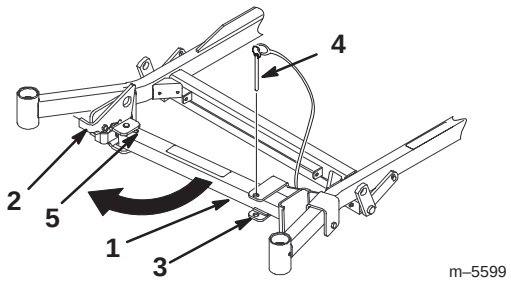

Figure 29

1. Z Stand
2. Latch
3. Bracket
4. Bracket Pin
5. Bottom of slot

3. Raise latch. Swing stand foot out front and slide stand toward machine, into the bottom of slot (Fig. 29 and 30).
4. Set foot of stand on the ground and rest latch on pivot tab (Fig. 30).
5. Start engine and put at half throttle.

Note: For best results, place foot of stand into seams in sidewalks or into turf (Fig. 30).

6. Drive onto stand. Stop when latch drops over tab into locked position (Fig. 30). Once onto stand, engage parking brake. Shut off engine.
7. Chock or block the drive wheels.

Warning

Parking brake may not hold machine parked on Z Stand and could cause personal injury or property damage.

Do not park on Z Stand unless wheels are chocked or blocked.

8. Perform maintenance.
9. Remove chocks or blocks.

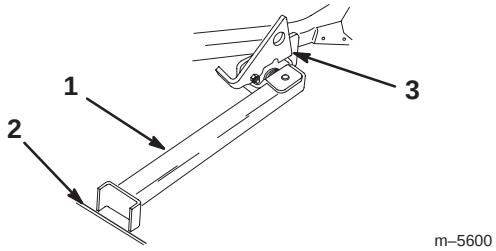

Figure 30

1. Z Stand (Positioned in slot)
2. Crack in side walk or turf
3. Latch resting on pivot tab

Driving off the Z Stand

1. Raise latch to unlocked position (Fig. 31).
2. Start engine and place at half throttle. Disengage parking brake.
3. Slowly drive backwards off of stand.
4. Return stand to its rest position (Fig. 29).

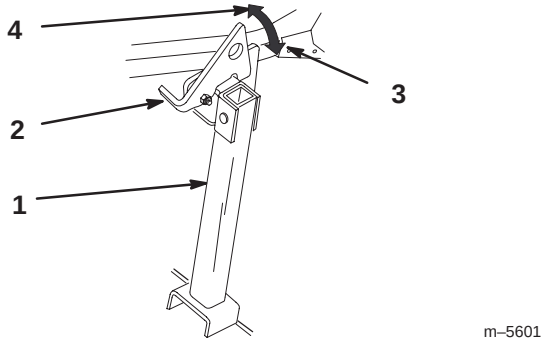

Figure 31

1. Z Stand
2. Latch
3. Locked position
4. Unlocked position

Tips for Mowing Grass

Fast Throttle Setting

For best mowing and maximum air circulation, operate the engine at **fast**. Air is required to thoroughly cut grass clippings, so do not set the height-of-cut so low as to totally surround the mower by uncut grass. Always try to have one side of the mower free from uncut grass, which allows air to be drawn into the mower.

Cutting a Lawn for the First Time

Cut grass slightly longer than normal to ensure that the cutting height of the mower does not scalp any uneven ground. However, the cutting height used in the past is generally the best one to use. When cutting grass longer than 6 inches (15 cm) tall, you may want to cut the lawn twice to ensure an acceptable quality of cut.

Cut 1/3 of the Grass Blade

It is best to cut only about 1/3 of the grass blade. Cutting more than that is not recommended unless grass is sparse, or it is late fall when grass grows more slowly.

Mowing Direction

Alternate mowing direction to keep the grass standing straight. This also helps disperse clippings which enhances decomposition and fertilization.

Mow at Correct Intervals

Normally, mow every four days. But remember, grass grows at different rates at different times. So to maintain the same cutting height, which is a good practice, mow more often in early spring. As the grass growth rate slows in mid summer, mow less frequently. If you cannot mow for an extended period, first mow at a high cutting height; then mow again two days later at a lower height setting.

Cutting Speed

To improve cut quality, use a slower ground speed in certain conditions.

Avoid Cutting Too Low

If the cutting width of the mower is wider than the mower you previously used, raise the cutting height to ensure that uneven turf is not cut too short.

Long Grass

If the grass is ever allowed to grow slightly longer than normal, or if it contains a high degree of moisture, raise the cutting height higher than usual and cut the grass at this setting. Then cut the grass again using the lower, normal setting.

When Stopping

If the machine's forward motion must be stopped while mowing, a clump of grass clippings may drop onto your lawn. To avoid this, move onto a previously cut area with the blades engaged.

Keep the Underside of the Mower Clean

Clean clippings and dirt from the underside of the mower after each use. If grass and dirt build up inside the mower, cutting quality will eventually become unsatisfactory.

Blade Maintenance

Maintain a sharp blade throughout the cutting season because a sharp blade cuts cleanly without tearing or shredding the grass blades. Tearing and shredding turns grass brown at the edges, which slows growth and increases the chance of disease. Check the cutter blades daily for sharpness, and for any wear or damage. File down any nicks and sharpen the blades as necessary. If a blade is damaged or worn, replace it immediately with a genuine Toro replacement blade.

Maintenance

Note: Determine the left and right sides of the machine from the normal operating position.

Recommended Maintenance Schedule

Maintenance Service Interval	Maintenance Procedure
After first 5 hours	• Hydraulic fluid—check level • Hydraulic filter—change • Engine Oil—change
Each Use	• Oil—check level • Safety system—check • Mower housing—clean • Engine air intake—clean[1] • Engine coolant—check
Every 8 Hours	• Cutting Blades—check
Every 25 Hours	• Idler arm—grease • Traction belt idler arm—grease • Brake lever—grease • Mower support arms—grease • Linkage bushings—oil[1] • Hydraulic fluid—check level • Battery—check electrolyte • Blade Spindle Bearings—grease
Every 50 Hours	• Belts—adjust tension • Belts—check for wear/cracks • Tires—check pressure • Air filter—clean[1] • Spark arrester—service[1]
Every 100 Hours	• Engine Oil—change[1] • Hydraulic lines—check • Engine Cooling System—clean[1] • Spark plug(s)—check • Hydraulic lines—check • Cooling system hoses—check
Every 200 Hours	• Oil Filter—change (200 hours or every other oil change)[1] • Hydraulic filter—change • Spark Plug(s)—check • Fuel Filter—replace • Brake pivot—grease • Engine Cooling System—check
Every 300 Hours	• Air filter—replace[1]
Every 500 Hours or at Storage	• Caster Pivot— adjust • Wheel Hub Slotted Nut— adjust

Maintenance Service Interval	Maintenance Procedure
Before Storage Service	• Battery–charge, Disconnect cables • Gasoline—drain • Chipped Surfaces—paint • Perform all maintenance procedures listed above before storage
Every 4 years	• Change engine coolant

[1]More often in dusty, dirty conditions

Important Refer to your engine operator's manual for additional maintenance procedures.

Caution

If you leave the key in the ignition switch, someone could accidently start the engine and seriously injure you or other bystanders.

Remove the key from the ignition and disconnect the wire from the spark plug(s) before you do any maintenance. Set the wire aside so that it does not accidentally contact the spark plug.

Servicing the Cutting Blades

Maintain sharp blades throughout the cutting season because sharp blades cut cleanly without tearing or shredding the grass blades. Tearing and shredding turns grass brown at the edges, which slows growth and increases the chance of disease.

Check the cutter blades daily for sharpness, and for any wear or damage. File down any nicks and sharpen the blades as necessary. If a blade is damaged or worn, replace it immediately with a genuine Toro replacement blade. For convenient sharpening and replacement, you may want to keep extra blades on hand.

Danger

A worn or damaged blade can break, and a piece of the blade could be thrown into the operator's or bystander's area, resulting in serious personal injury or death.

- **Inspect the blade periodically for wear or damage.**
- **Replace a worn or damaged blade.**

Before Inspecting or Servicing the Blades

Park the machine on a level surface, disengage the blade control (PTO), and set the parking brake. Turn the ignition key to Off. Remove the key and disconnect the spark plug wire(s) from the spark plug(s).

Inspecting the Blades

1. Inspect the cutting edges (Fig. 32). If the edges are not sharp or have nicks, remove and sharpen the blades; refer to Sharpening the Blades, page 33.
2. Inspect the blades, especially the curved area (Fig. 32). If you notice any damage, wear, or a slot forming in this area (item 3 in Fig. 32), immediately install a new blade.

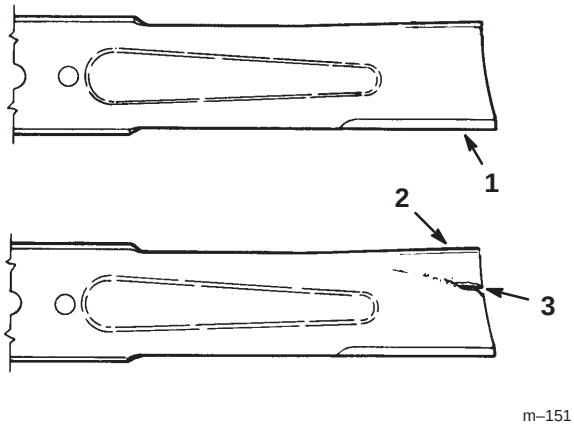

Figure 32

1. Cutting edge
2. Curved area
3. Wear/slot forming

Checking for Bent Blades

1. Disengage the PTO, move the motion control levers to the neutral locked position and set the parking brake.

2. Stop the engine, remove the key, and wait for all moving parts to stop before leaving the operating position.

3. Rotate the blades until the ends face forward and backward (Fig. 33). Measure from a level surface to the cutting edge of the blades (Fig. 34). Note this dimension.

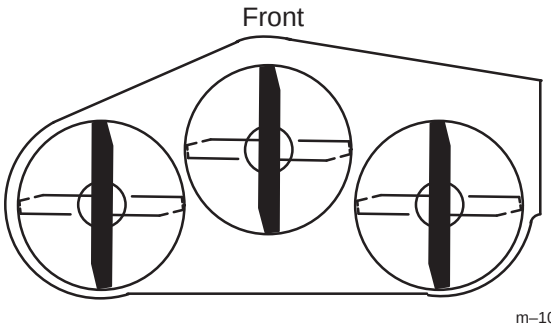

Figure 33

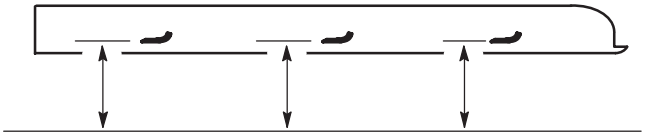

MEASURE FROM CUTTING EDGE TO A LEVEL SURFACE

m–2539

Figure 34

4. Rotate the opposite ends of the blades forward. Measure from a level surface to the cutting edge of the blades at the same position as in step 3 above. The difference between the dimensions obtained in steps 3 and 4 must not exceed 1/8 inch (3 mm). If this dimension exceeds 1/8 inch (3 mm), the blade is bent and must be replaced; refer to Removing the Blades and Installing the Blades, page 34.

Warning

A blade that is bent or damaged could break apart and could seriously injure or kill you or bystanders.

- **Always replace bent or damaged blade with a new blade.**
- **Never file or create sharp notches in the edges or surfaces of blade.**

Removing the Blades

The blades must be replaced if a solid object is hit, if the blade is out of balance, or is bent. To ensure optimum performance and continued safety conformance of the machine, use genuine Toro replacement blades. Replacement blades made by other manufacturers may result in non-conformance with safety standards.

Warning

Contact with sharp blade can cause serious injury.

Wear gloves or wrap sharp edges of the blade with a rag.

Hold the blade end using a rag or thickly-padded glove. Remove the blade bolt, spring disk, and blade from the spindle shaft (Fig. 35).

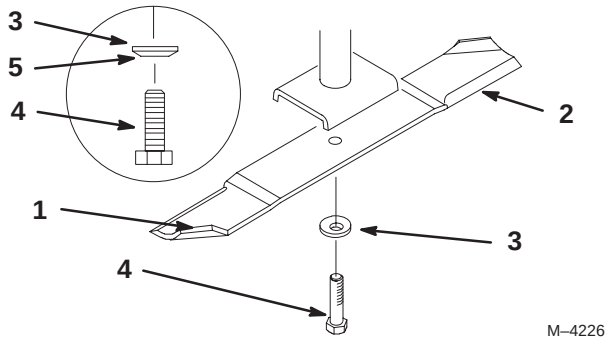

Figure 35

1. Sail area of blade
2. Blade
3. Spring disk
4. Blade bolt
5. Cone toward bolt head

Sharpening the Blades

Warning

When sharpening blade, pieces of blade could be thrown and cause serious injury.

Wear proper eye protection when sharpening blade.

1. Use a file to sharpen the cutting edge at both ends of the blade (Fig. 36). Maintain the original angle. The blade retains its balance if the same amount of material is removed from both cutting edges.



Figure 36

1. Sharpen at original angle

2. Check the balance of the blade by putting it on a blade balancer (Fig. 37). If the blade stays in a horizontal position, the blade is balanced and can be used. If the blade is not balanced, file some metal off of the end of the sail area only (Fig. 35). Repeat this procedure until the blade is balanced.

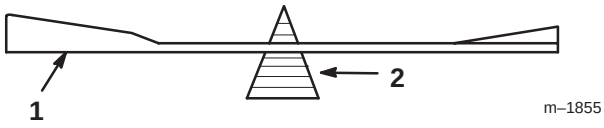

Figure 37

1. Blade
2. Balancer

Installing the Blades

1. Install the blade onto the spindle shaft (Fig. 35).

Important The curved part of the blade must be pointing upward toward the inside of the mower to ensure proper cutting.

2. Install the spring disk and blade bolt. The spring disk cone must be installed toward the bolt head (Fig. 35). **Torque the blade bolt to 85–110 ft.-lb. (115–150 N·m).**

Servicing the Air Cleaner

Paper Element:

- Clean after 50 operating hours.
- Replace after 300 operating hours.

Note: Service the air cleaner more frequently (every few hours) if operating conditions are extremely dusty or sandy.

Removing the Paper Element

1. Disengage the PTO, move the motion control levers to the neutral locked position and set the parking brake.

2. Stop the engine, remove the key, and wait for all moving parts to stop before leaving the operating position.

3. Unlatch the seat, tilt the seat up and tilt the engine cover forward.

4. Clean around the air cleaner to prevent dirt from getting into the engine and causing damage. Loosen the retaining clips and remove the air cleaner cover (Fig. 38).

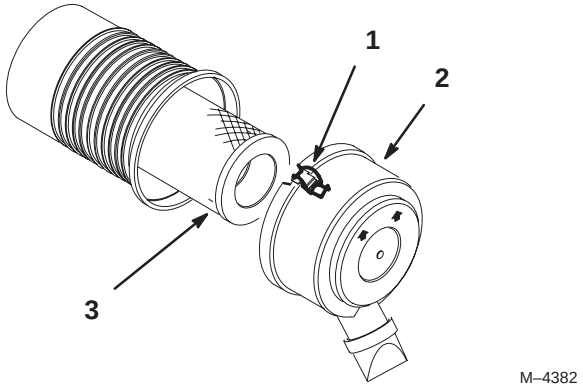

Figure 38

1. Retaining clip
2. Air cleaner cover
3. Air filter

5. Carefully remove the filter from the compartment (Fig. 38).

Cleaning the Paper Elements

1. Lightly tap the element on a flat surface to remove dust and dirt (Fig. 39).

2. Inspect the element for tears, an oily film, and damage to the rubber seal.

Important Never clean the paper element with pressurized air or liquids, such as solvent, gas, or kerosene. Replace the paper element if it is damaged or cannot be cleaned thoroughly.

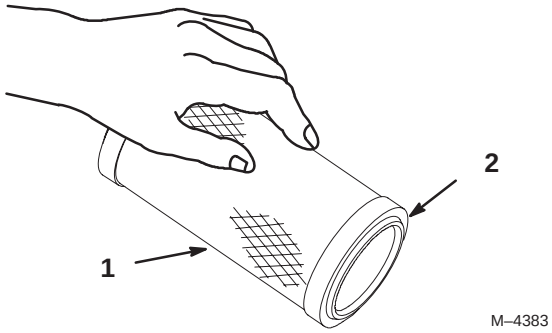

Figure 39

1. Paper element
2. Rubber seal

Installing the Paper Element

Important To prevent engine damage, always operate the engine with the paper air cleaner installed.

1. Carefully slide the element into the compartment (Fig. 38).
2. Place the air cleaner cover into the compartment and latch the retaining clips (Fig. 38).

Servicing the Engine Oil

Change the oil:

- After the first 8 operating hours.
- After every 100 operating hours.

Note: Change the oil more frequently when operating conditions are extremely dusty or sandy.

Oil Type: Detergent oil (API service SF, SG, SH, SJ or higher)

Crankcase Capacity:

- 67 oz. (2.0 l) when the oil filter is removed
- 61 oz. (1.8 l) when the oil filter is **not** removed

Viscosity: See the table below.

USE THESE SAE VISCOSITY OILS

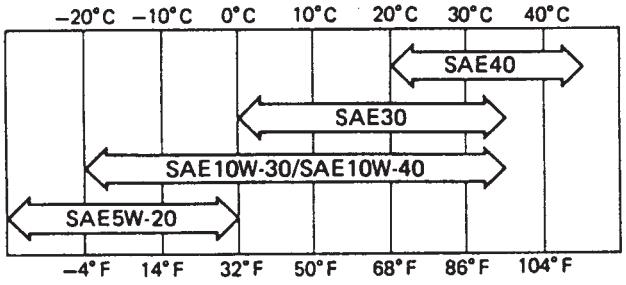

m–4292

Checking the Oil Level

Note: Check the oil when the engine is cold.

1. Disengage the PTO, move the motion control levers to the neutral locked position and set the parking brake.
2. Stop the engine, remove the key, and wait for all moving parts to stop before leaving the operating position.
3. Clean around the oil dipstick so that dirt cannot fall into the filler hole and damage the engine (Fig. 40).
4. Pull the oil dipstick out and wipe the metal end clean (Fig. 40).
5. Slide the oil dipstick fully into the filler cap. Pull the dipstick out and look at the metal end (Fig. 40). If the oil level is low, slowly pour only enough oil into the filler tube to raise the level to the full mark.

Important Do not overfill the crankcase with oil because the engine may be damaged. Do not run the engine with oil below the low mark because the engine may be damaged.

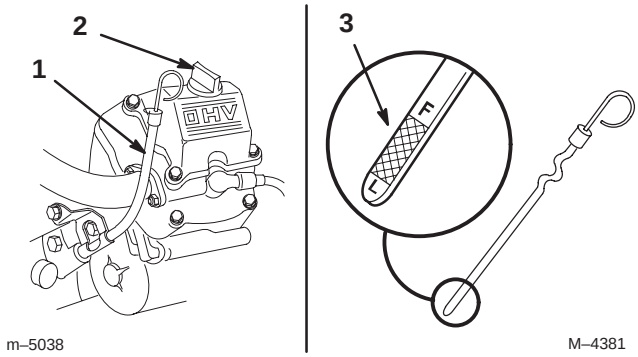

m–5038 M–4381

Figure 40

1. Oil dipstick
2. Filler cap
3. Metal end

Changing the Oil

Replace the oil every 100 hours.

1. Start the engine and let it run for five minutes. This warms the oil so that it drains better.
2. Park the machine so that the drain side is slightly lower than the opposite side to ensure that the oil drains completely. Disengage the power take off (PTO), set the parking brake, stop the engine, and remove the key.
3. Place a pan below the oil drain. Rotate the oil drain valve to allow oil to drain (Fig. 41).
4. When the oil has drained completely, close the drain valve.

Note: Dispose of the used oil at a certified recycling center.

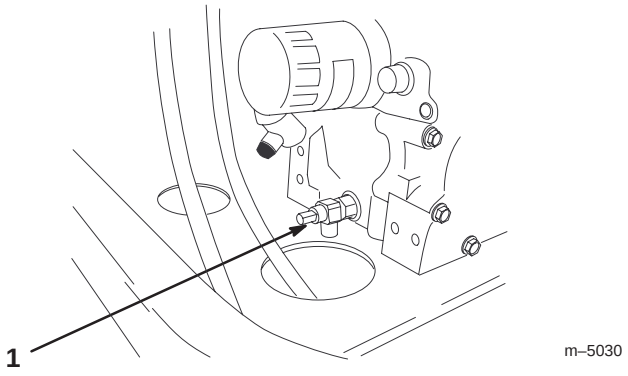

Figure 41

1. Oil drain

5. Slowly pour approximately 80% of the specified oil into the filler cap (Fig. 40). Refer to Servicing the Engine Oil, page 35.
6. Check the oil level; refer to Checking the Oil Level, page 35.
7. Slowly add additional oil to bring it to the full mark.

Changing the Oil Filter

Replace the oil filter every 200 hours or every other oil change.

Note: Change the oil filter more frequently when operating conditions are extremely dusty or sandy.

1. Drain the oil from the engine; refer to Changing the Oil, page 35.
2. Remove the old filter and wipe the filter adapter (Fig. 42) gasket surface.
3. Pour new oil of the proper type in through the center hole. Stop pouring when the oil reaches the bottom of the threads. Allow a minute or two for the oil to be absorbed by the filter material.
4. Apply a thin coat of new oil to the rubber gasket on the replacement filter (Fig. 42).

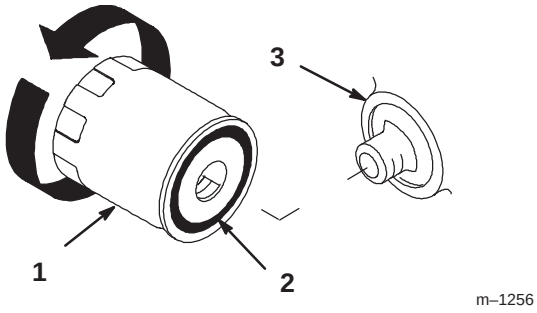

Figure 42

1. Oil filter
2. Gasket
3. Adapter

5. Install the replacement oil filter to the filter adapter. Turn the oil filter clockwise until the rubber gasket contacts the filter adapter; then tighten the filter an additional 1/2 turn (Fig. 42).
6. Fill the crankcase with the proper type of new oil; refer to Servicing the Engine Oil, page 35.

Servicing the Cooling System

Danger

Discharge of hot pressurized coolant or touching hot radiator and surrounding parts can cause severe burns.

- **Do not remove the radiator cap when the engine is hot. Always allow the engine to cool at least 15 minutes or until the radiator cap is cool enough to touch without burning your hand before removing the radiator cap.**
- **Do not touch radiator and surrounding parts that are hot.**

Danger

Rotating shaft and fan can cause personal injury.

- **Do not operate the machine without the covers in place.**
- **Keep fingers, hands and clothing clear of rotating fan and drive shaft.**
- **Shut off the engine and remove the ignition key before performing maintenance.**

Caution

Swallowing engine coolant can cause poisoning.

- **Do not swallow engine coolant.**
- **Keep out of reach from children and pets.**

Checking the Radiator Coolant

Check the cooling system level daily.

Fluid Type: 50/50 mix of extended life antifreeze/Dex–Cool® and water

Cooling System Capacity: 128 oz. (3.8 l)

Note: Do not open the radiator cap. Doing this may induce air into the cooling system.

1. Position the machine on a level surface, stop the engine, and set the parking brake.
2. Unlatch the seat, tilt the seat up and tilt the engine hood forward.
3. With the engine cool, check the overflow bottle level. The fluid needs to be up to the bump on the outside of the overflow bottle (Fig. 43).
4. If the coolant level is low, add a 50/50 mix of extended life antifreeze/Dex–Cool® and water to the overflow bottle (Fig. 43).
5. Add the 50/50 coolant mix to the overflow bottle and fill it to the indicator line on the bottle (Fig. 43).

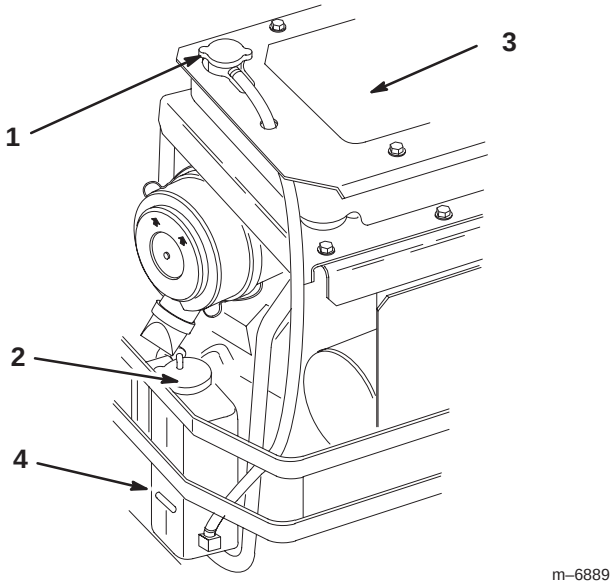

Figure 43

1. Radiator cap
2. Antifreeze overflow bottle
3. Radiator core and screen
4. Indicator line on side of overflow bottle

Cleaning the Cooling System

Clean the cooling system daily before each use.

1. Position the machine on a level surface, stop the engine, and set the parking brake.

Important Before starting the engine, clean grass from the pump drive belt compartment. Check more often in dry conditions.

2. Unlatch the seat, tilt the seat up and raise the rubber flap above the drive belt compartment.
3. Remove debris from the drive belt compartment and hydraulic pumps.
4. Remove debris from the screen on the engine cover.
5. Tilt the engine cover forward.
6. Remove debris from the radiator core and engine (Fig. 43).

Important Do not damage the radiator cooling fins.

7. Inspect the seals on the engine cover and replace them if needed.
8. Close the engine cover and tilt the seat back.

Changing the Engine Coolant

Change the engine coolant every 4 years.

Contact an Authorized Service Dealer for changing the coolant.

Servicing the Spark Plug

Check the spark plug(s) after every 100 operating hours. Make sure that the air gap between the center and side electrodes is correct before installing the spark plug. Use a spark plug wrench for removing and installing the spark plug(s) and a gapping tool/feeler gauge to check and adjust the air gap. Install a new spark plug(s) if necessary.

Type: NGK BPR2ES (or equivalent)

Air Gap: 0.030 inch (0.76 mm)

Removing the Spark Plug(s)

1. Disengage the power take off (PTO) and stop the engine. Move the levers to the neutral locked position and apply the parking brake. Remove the key.
2. Clean around the spark plug(s) to prevent dirt from falling into the engine and potentially causing damage. Pull the wire(s) off of the spark plug(s) (Fig. 44).
3. Remove the spark plug(s) and metal washer.

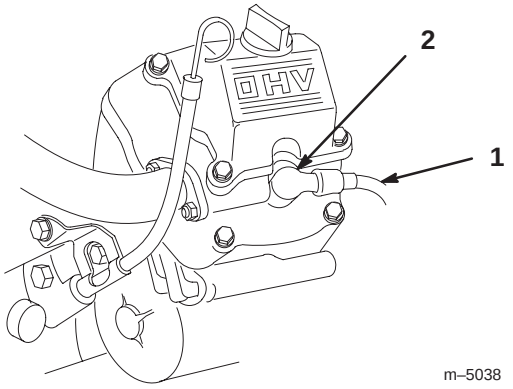

Figure 44

1. Spark plug wire
2. Spark plug

Checking the Spark Plug

1. Clean the electrodes by scraping or with a wire brush to remove carbon deposits and wetness (Fig. 45).
2. Inspect the spark plug (Fig. 45).

Important Always replace the spark plug(s) when it has a black coating, worn electrodes, an oily film, or cracks.

3. Check the gap between the center and side electrodes (Fig. 45). Bend the side electrode (Fig. 45) if the gap is not correct.

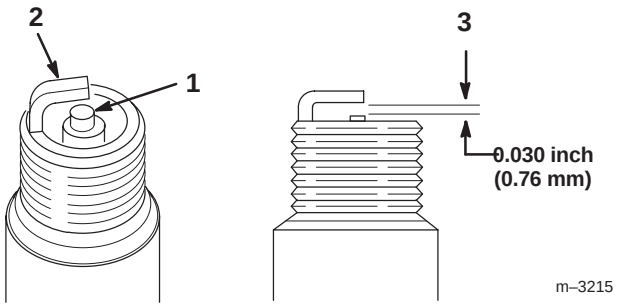

Figure 45

1. Center electrode insulator
2. Side electrode
3. Air gap (not to scale)

Installing the Spark Plug(s)

1. Install the spark plug(s). Make sure that the air gap is set correctly.
2. Tighten the spark plug(s) to 17 ft-lb (23 N·m).
3. Push the wire(s) onto the spark plug(s) (Fig. 44).

Replacing the Fuel Filter

Replace the fuel filter after every 200 operating hours or yearly, whichever occurs first.

Never install a dirty filter if it is removed from the fuel line.

1. Allow the machine to cool down.
2. Disengage the PTO, move the motion control levers to the neutral locked position and set the parking brake.
3. Stop the engine, remove the key, and wait for all moving parts to stop before leaving the operating position.
4. Close the fuel shut–off valve (Fig. 46).
5. Squeeze the ends of the hose clamps together and slide them away from the filter (Fig. 46).
6. Remove the filter from the fuel lines.
7. Install a new filter and move the hose clamps close to the filter (Fig. 46).
8. Wipe up any spilled fuel.
9. Open fuel shut-off valve (Fig. 46).

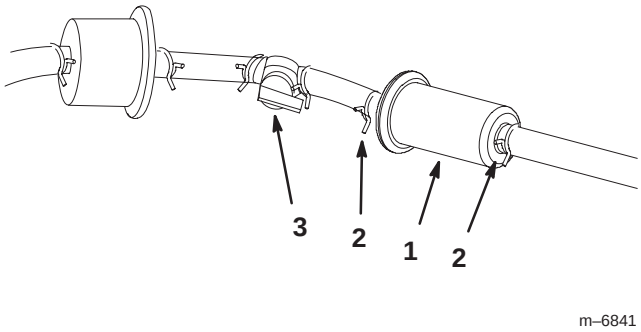

Figure 46

1. Filter
2. Hose clamp
3. Fuel shut-off valve

Draining The Fuel Tank

Danger

In certain conditions, gasoline is extremely flammable and highly explosive. A fire or explosion from gasoline can burn you and others and can damage property.

- **Drain gasoline from the fuel tank when the engine is cold. Do this outdoors in an open area. Wipe up any gasoline that spills.**
- **Never smoke when draining gasoline, and stay away from an open flame or where a spark may ignite the gasoline fumes.**

1. Park the machine on a level surface, to ensure the fuel tank drains completely. Then disengage the power take off (PTO), set the parking brake, and turn the ignition key to off. Remove the key.
2. Close the fuel shut–off valve (Fig. 47).
3. Loosen the hose clamp at the fuel filter and slide it up the fuel line away from the fuel filter (Fig. 47).
4. Pull the fuel line off fuel filter (Fig. 47). Open fuel shut-off valve and allow gasoline to drain into a gas can or drain pan.

Note: Now is the best time to install a new fuel filter because the fuel tank is empty.

5. Install the fuel line onto the fuel filter. Slide the hose clamp close to the fuel filter to secure the fuel line (Fig. 47).

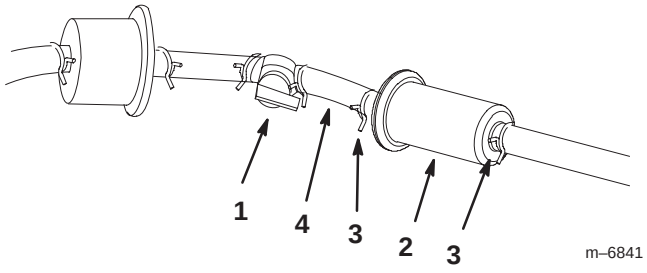

Figure 47

1. Fuel shut-off valve
2. Fuel filter
3. Hose clamp
4. Fuel line

Servicing the Spark Arrester

Inspect the spark arrester every 50 hours for damage, such as holes in the screen, and for buildup on the screen. If it is damaged, replace it with a new spark arrester. If it is dirty, remove it and clean the screen with a wire brush and/or soak it in solvent.

Greasing and Lubrication

Lubricate the machine when shown on the **Check Service Reference Aid** decal (Fig. 48). Grease more frequently when operating conditions are extremely dusty or sandy.

Grease Type: General-purpose grease

How to Grease

1. Disengage the power take off (PTO) and stop the engine. Move the levers to the neutral locked position and apply the parking brake. Remove the key.
2. Clean the grease fittings with a rag. Make sure to scrape any paint off of the front of the fitting(s).
3. Connect a grease gun to the fitting. Pump grease into the fittings until grease begins to ooze out of the bearings.
4. Wipe up any excess grease.

Where to Add Grease

Lubricate the grease fittings as shown on the **Check Service Reference Aid** decal (Fig. 48).

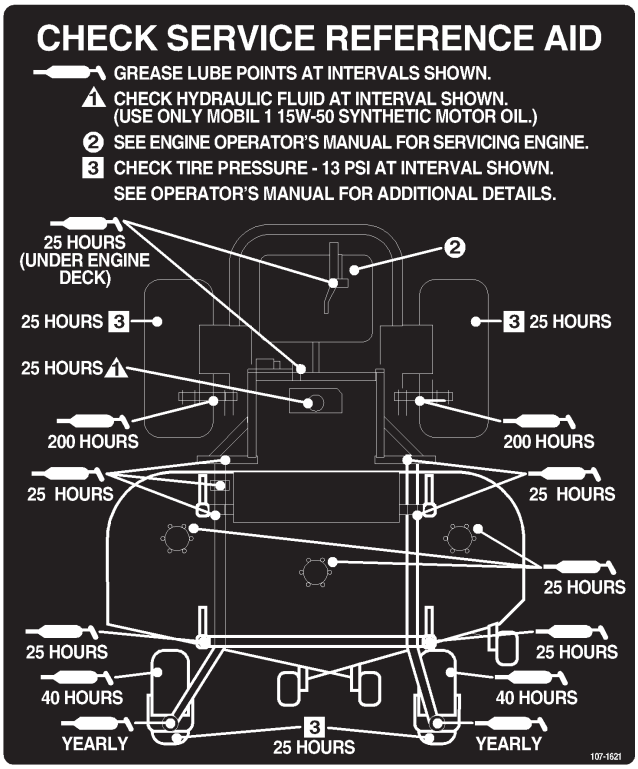

Figure 48

Greasing the Front Caster Pivots

Lubricate the front caster pivots once a year.

1. Remove the dust cap and adjust the caster pivots. Keep dust cap off until greasing is done. Refer to Adjusting the Caster Pivot Bearing, page 45.
2. Remove the hex plug. Thread a grease zerk into hole.
3. Pump grease into zerk until it oozes out around top bearing.
4. Remove grease zerk in hole. Reinstall hex plug and cap.

Greasing the Spindles

The cutting unit must be lubricated weekly or every 25 hours. Grease with No. 2 general purpose lithium base or molybdenum base grease.

Important Make sure cutting unit spindles are full of grease weekly.

1. Disengage the PTO, move the motion control levers to the neutral locked position and set the parking brake.
2. Stop the engine, remove the key, and wait for all moving parts to stop before leaving the operating position.
3. Remove the belt covers.
4. Grease the three spindle bearings under the pulleys until grease comes out the lower seals (Fig. 49).
5. Grease the fittings on the push arms (Fig. 49).

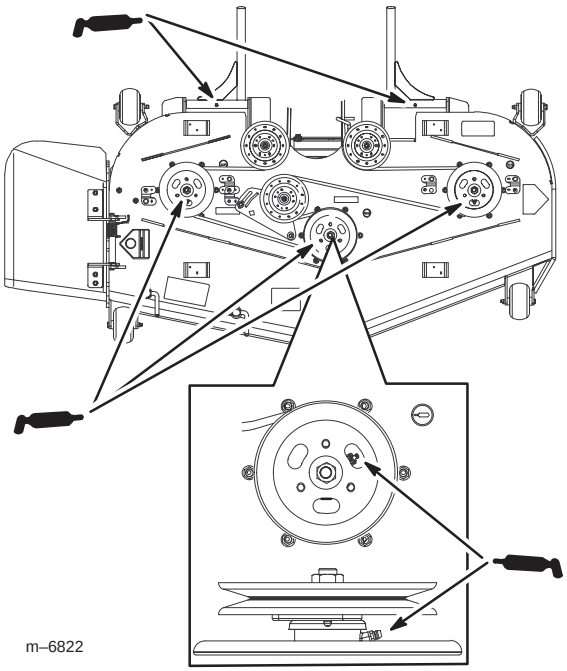

Figure 49

Where to Add Light Oil or Spray Lubrication

Lubricate the machine in the following areas with spray type lubricant or light oil. Lubricate every 160 hours.

- Seat switch actuator
- Brake handle pivot
- Brake rod bushings
- Motion control bronze bushings

Checking the Tire Pressure

Maintain the air pressure in the front and rear tires as specified. Uneven tire pressure can cause uneven cut. Check the pressure at the valve stem after every 50 operating hours or monthly, whichever occurs first (Fig. 50). Check the tires when they are cold to get the most accurate pressure reading.

Pressure: 13 psi (90 kPa) drive wheels and caster wheels

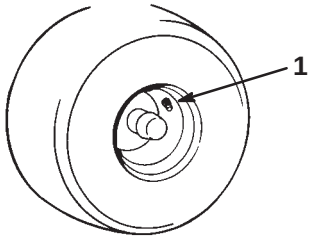

m–1872

Figure 50

1. Valve stem

Servicing the Hydraulic System

Checking the Hydraulic Fluid

Check the hydraulic fluid level:

- Before the engine is first started.
- After the first 8 operating hours.
- After every 25 operating hours.

Fluid Type: Mobil 1 15W-50 synthetic motor oil or equivalent synthetic oil.

Important Use oil specified or equivalent. Other fluids could cause system damage.

Hydraulic System Oil Capacity: 67 oz. (2.0 l)

Note: There are two ways of checking the hydraulic oil. One is when the oil is warm and one is when the oil is cold. The baffle inside the tank has two levels depending if the oil is warm or cold.

1. Position machine on a level surface and set the parking brake.

2. Clean area around filler neck of hydraulic tank (Fig. 51).

3. Remove the cap from the filler neck. Look inside to check if there is fluid in the reservoir (Fig. 51).

4. If there is no fluid, add fluid to the reservoir until it reaches the **cold** level of the baffle.

5. Run the machine at low idle for 15 minutes to allow any air to purge out of the system and warm the fluid. Refer to Starting and Stopping the Engine on page 20.

6. Check the fluid level while the fluid is warm. The fluid should be between cold and hot.

7. If required, add fluid to the hydraulic tank.

Note: The fluid level should be to the top of the **hot** level of the baffle, when the fluid is hot (Fig. 51).

8. Install cap on filler neck.

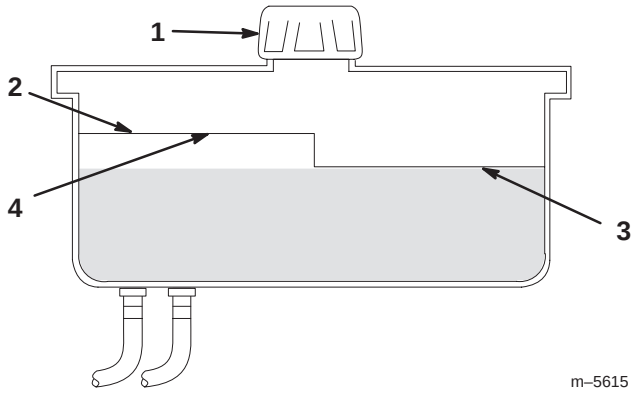

m–5615

Figure 51

1. Cap
2. Baffle
3. Cold fluid level—full
4. Hot fluid level—full

Warning

Hydraulic fluid escaping under pressure can penetrate skin and cause injury.

- **If hydraulic fluid is injected into the skin it must be surgically removed within a few hours by a doctor familiar with this type of injury. Gangrene may result if this is not done.**
- **Keep body and hands away from pin hole leaks or nozzles that eject high pressure hydraulic fluid.**
- **Use cardboard or paper to find hydraulic leaks.**
- **Safely relieve all pressure in the hydraulic system before performing any work on the hydraulic system.**
- **Make sure all hydraulic fluid hoses and lines are in good condition and all hydraulic connections and fittings are tight before applying pressure to hydraulic system.**

Replacing the Hydraulic Filter

Change the hydraulic filter:

- After the first 8 operating hours.
- After every 200 operating hours.

Use summer filter above 32°F (0°C)

Use winter filter below 32°F (0°C)

1. Disengage the PTO, move the motion control levers to the neutral locked position and set the parking brake.
2. Stop the engine, remove the key, and wait for all moving parts to stop before leaving the operating position.

Important Do not substitute automotive oil filter or severe hydraulic system damage may result.

3. Place drain pan under filter, remove the old filter and wipe the filter adapter gasket surface clean (Fig. 53).

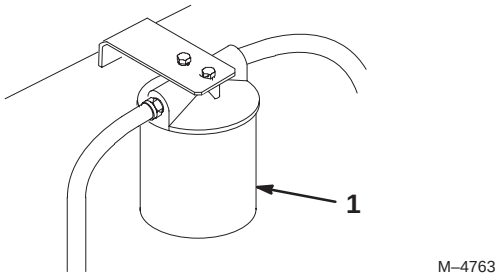

Figure 52

1. Hydraulic filter

4. Apply a thin coat hydro fluid to the rubber gasket on the replacement filter (Fig. 53).
5. Install the replacement hydraulic filter onto the filter adapter. Do not tighten.
6. Fill the hydraulic tank with hydraulic fluid until the fluid overflows the filter and then turn the oil filter clockwise until the rubber gasket contacts the filter adapter, then tighten the filter an additional 1/2 turn (Fig. 53).
7. Clean up any spilled fluid.
8. Add fluid to the cold level of the baffle in the hydraulic tank.
9. Start the engine and let it run for about two minutes to purge air from the system. Stop the engine and check for leaks. If one or both wheels will not drive, refer Bleeding Hydraulic System, page 42.
10. Recheck the fluid level while the fluid is warm. The fluid should be between cold and hot.
11. If required, add fluid to the hydraulic tank. **Do not overfill.**

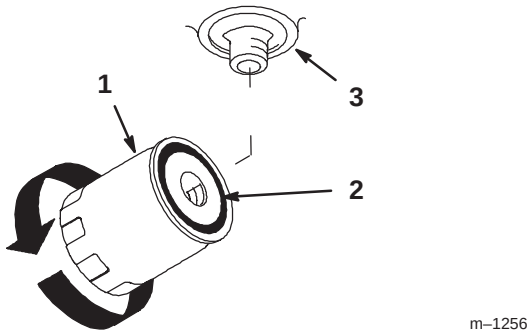

Figure 53

1. Hydraulic filter
2. Gasket
3. Adapter

Bleeding the Hydraulic System

The traction system is self bleeding, however, it may be necessary to bleed the system if fluid is changed or after work is performed on the system.

1. Raise rear of the machine so wheels are off the ground and support with jack stands.
2. Start the engine and run at low idle speed. Engage the lever and traction on one side and spin the wheel by hand.
3. When the wheel begins to spin on its own, keep it engaged until wheel drives smoothly. (minimum 2 minutes)
4. Check hydraulic fluid level and add fluid as required to maintain proper level.
5. Repeat this procedure on the opposite wheel.

Checking the Hydraulic Lines

After every 100 operating hours, check hydraulic lines and hoses for leaks, loose fittings, kinked lines, loose mounting supports, wear, weather and chemical deterioration. Make necessary repairs before operating.

Note: Keep areas around hydraulic system clean from grass and debris build up.

Warning

Hydraulic fluid escaping under pressure can penetrate skin and cause injury.

- **If hydraulic fluid is injected into the skin it must be surgically removed within a few hours by a doctor familiar with this type of injury. Gangrene may result if this is not done.**
- **Keep body and hands away from pin hole leaks or nozzles that eject high pressure hydraulic fluid.**
- **Use cardboard or paper to find hydraulic leaks.**
- **Safely relieve all pressure in the hydraulic system before performing any work on the hydraulic system.**
- **Make sure all hydraulic fluid hoses and lines are in good condition and all hydraulic connections and fittings are tight before applying pressure to hydraulic system.**

Adjusting the Handle Neutral

If motion control levers do not align, or move easily into the console notch, adjustment is required. Adjust each lever, spring and rod separately.

Note: Motion control levers must be installed correctly. See Installing the Motion Control Levers in the Set Up instructions.

1. Disengage the PTO, move the motion control levers to the neutral locked position and set the parking brake.

2. Stop the engine, remove the key, and wait for all moving parts to stop before leaving the operating position.

3. Unlatch the seat and tilt the seat up.

4. Begin with either the left or right motion control lever.

5. Move lever to the neutral position but **not locked** (Fig. 55).

6. Pull lever back until the clevis pin (on arm below pivot shaft) contacts the end of the slot (just beginning to put pressure on the spring) (Fig. 55).

7. Check where the control lever is relative to notch in console (Fig. 54). It should be centered allowing lever to pivot outward to the neutral lock position.

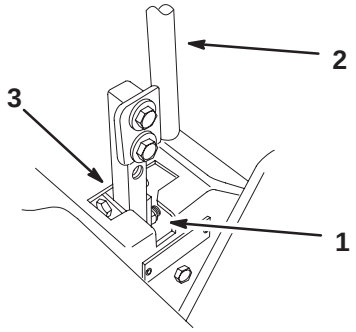

Figure 54

1. Neutral locked position
2. Control lever
3. Neutral potion

8. If adjustment is needed, loosen the nut and jam nut against the yoke (Fig. 55).

9. Apply slight rearward pressure on the motion control lever, turn the head of the adjustment bolt in the appropriate direction until the control lever is centered in neutral lock position (Fig. 54).

Note: Keeping rearward pressure on the lever will keep the pin at the end of the slot and allow the adjustment bolt to move the lever to the appropriate position.

10. Tighten the nut and jam nut (Fig. 55).

11. Repeat on the opposite side of the machine.

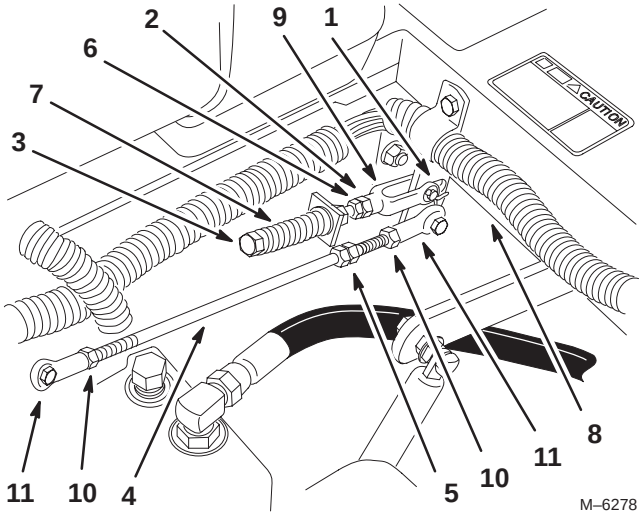

Figure 55

1. Clevis pin in slot
2. Nut against yoke
3. Adjustment bolt
4. Pump rod
5. Double nuts
6. Jam Nut
7. Spring
8. Pivot shaft
9. Yoke
10. Locknut
11. Ball joint

Setting the Hydraulic Pump Neutral

Note: Adjust handle neutral first. That has to be correct before the following adjustment can be made.

Danger

Mechanical or hydraulic jacks may fail to support machine and cause a serious injury.

- **Use jack stand when supporting machine.**
- **Do not use hydraulic jacks.**

Warning

Engine must be running so motion control adjustment can be performed. Contact with moving parts or hot surfaces may cause personal injury.

Keep hands, feet, face, clothing and other body parts away from rotating parts, muffler and other hot surfaces.

This adjustment must be made with drive wheels turning.

1. Raise the frame and block up the machine so drive wheels can rotate freely.
2. Disconnect the electrical connector from the seat safety switch. **Temporarily** install a jumper wire across terminals in the wiring harness connector.
3. Unlatch the seat, slide seat forward, disconnect the seat rod and tilt the seat fully forward.

Setting the Right–hand Hydraulic Pump Neutral

1. Start the engine, open throttle 1/2 way and release parking brake. Refer to Starting and Stopping the Engine, page 20.

Note: Motion control lever must be in neutral while making any adjustments.

2. Adjust pump rod length by rotating the knob, in the appropriate direction, until the wheel is still or slightly creeping in reverse (Fig. 56).
3. Move motion control lever forward and reverse, then back to neutral. Wheel must stop turning or slightly creep in reverse.
4. Open throttle to fast. Make sure wheel remains stopped or slightly creeps in reverse, adjust if necessary.

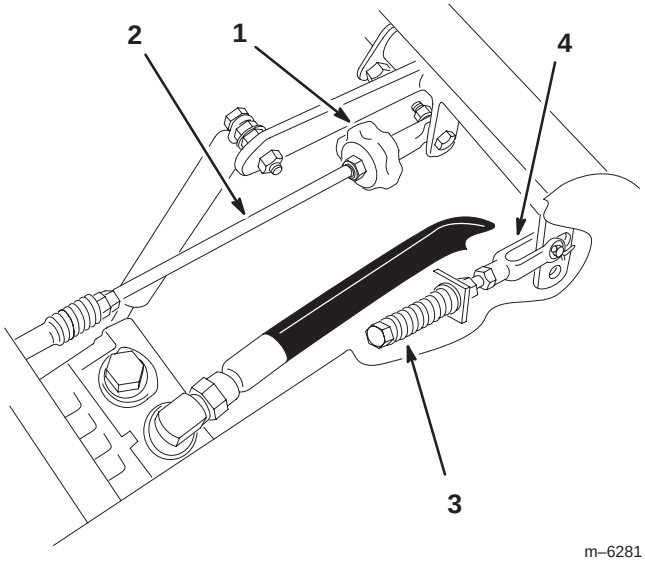

Figure 56

1. Tracking knob
2. Pump rod
3. Adjustment bolt
4. Yoke

Setting the Left–hand Hydraulic Pump Neutral

1. Loosen the locknuts at the ball joints on pump control rod (Fig. 55).
2. Start the engine, open throttle 1/2 way and release parking brake. Refer to Starting and Stopping the Engine, page 20.

Note: Motion control lever must be in neutral while making any adjustments.

Note: The front nut on the pump rod has left–hand threads.

3. Adjust pump rod length by rotating double nuts on rod, in the appropriate direction, until wheel is still or slightly creeps in reverse (Fig. 55).
4. Move motion control lever forward and reverse, then back to neutral. Wheel must stop turning or slightly creep in reverse.
5. Open throttle to fast. Make sure wheel remains stopped or slightly creeps in reverse, re-adjust if necessary.
6. Tighten the locknuts at the ball joints (Fig. 55).

Warning

Electrical system will not perform proper safety shut off with jumper wire installed.

- **Remove jumper wire from wire harness connector and plug connector into seat switch when adjustment is completed.**
- **Never operate this unit with the jumper installed and the seat switch bypassed.**

7. After both pump neutrals are set, shut off the machine.

8. Remove jumper wire from wire harness connector and plug the connector into the seat switch.

9. Install the seat rod and lower the seat into position.

10. Remove the jack stands.

Adjusting the Tracking

The right hand pump has a knob for adjusting the tracking.

Important Adjust the handle neutral and hydraulic pump neutral before adjusting the tracking. Refer to Adjusting the Handle Neutral on page 43 and Adjusting the Hydraulic Pump Neutral on page 44.

1. Push both control levers forward the same distance.

2. Check if the machine pulls to one side. If it does, stop the machine and set the parking brake.

3. Unlatch the seat and tilt the seat forward to access the tracking knob.

Note: Determine the left and right sides of the machine from the normal operating position.

4. To make the machine go right, turn the knob towards the rightside of the machine. Refer to figure 57.

5. To make the machine go left, turn the knob towards the leftside of the machine. Refer to figure 57.

6. Repeat adjustment until the tracking is correct.

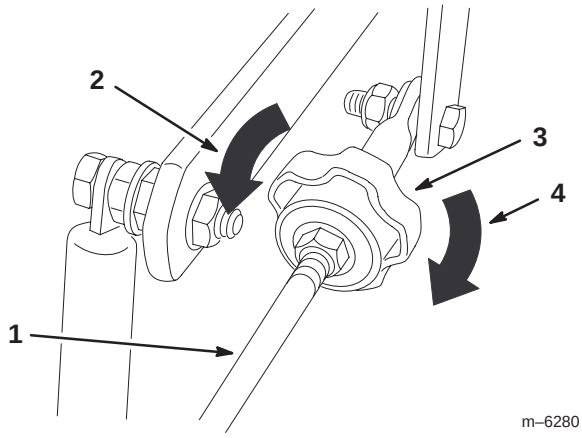

Figure 57

1. Pump rod
2. Turn this way to track left
3. Tracking knob
4. Turn this way to track right

Adjusting the Caster Pivot Bearing

Check after every 500 operating hours or at storage, whichever comes first.

1. Disengage the PTO, move the motion control levers to the neutral locked position and set the parking brake.

2. Stop the engine, remove the key, and wait for all moving parts to stop before leaving the operating position.

3. Remove the dust cap from the caster and tighten the locknut (Fig. 58).

4. Tighten until the spring washers are flat and then back off 1/4 turn to properly set the preload on the bearings (Fig. 58).

Important Make sure that the spring washers are installed correctly as shown in Figure 58.

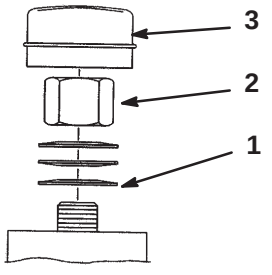

Figure 58

1. Spring washers
2. Locknut
3. Dust cap

Checking the Wheel Hub Slotted Nut

Check after every 500 operating hours.

The slotted nut needs to be torqued to 125 ft-lb (170 N·m).

1. Disengage the PTO, move the motion control levers to the neutral locked position and set the parking brake.
2. Stop the engine, remove the key, and wait for all moving parts to stop before leaving the operating position.
3. Remove the cotter pin.
4. Torque the slotted nut to 125 ft-lb (170 N·m) (Fig. 59).
5. Check the distance from the bottom of the slot in the nut to the inside edge of the hole. Two threads or less should be showing (Fig. 59).
6. If more than two threads are showing, remove the nut and install the washer between the hub and nut (Fig. 59).
7. Torque the slotted nut to 125 ft.-lb. (170 N·m) (Fig. 59).
8. Tighten the nut until the next set of slots line up with the hole in the shaft (Fig. 59).
9. Install the cotter pin.

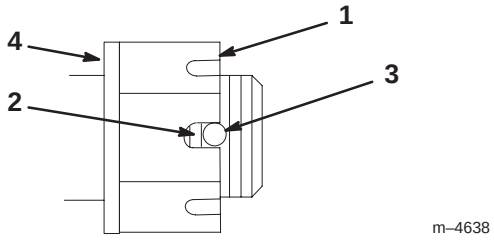

Figure 59

1. Slotted nut
2. Two threads or less showing
3. Hole in threaded rod
4. Washer (if needed)

Leveling the Mower at Three Positions

Important There are only three measuring positions needed to level the mower.

Setting Up the Machine

1. Position mower on a flat surface.
2. Disengage the PTO, move the motion control levers to the neutral locked position and set the parking brake.
3. Stop the engine, remove the key, and wait for all moving parts to stop before leaving the operating position.
4. Stop the engine, remove the key, and wait for all moving parts to stop before leaving the operating position.
5. Check tire pressure of all four tires. If needed, adjust to 13 psi (90 kPa)
6. Lower the mower to the 3 inch (76 mm) height–of–cut position.
7. Inspect the four chains. The chains need to have tension.

- If one rear chain is loose, lower (loosen) the front support arm on the same side. Refer to Adjusting the Front–to–Rear Mower Pitch on page 47.
- If one front chain is loose, raise (tighten) the front support arm for that chain. Refer to Adjusting the Front–to–Rear Mower Pitch on page 47.

Leveling the Mower Side–to–Side

1. Position the **right** blade front-to-rear (Fig. 60).
2. Measure the right blade at the **B** location (Fig. 60), from a level surface to the cutting edge of the blade tips (Fig. 61).
3. Record this measurement. This measurement needs to be 3–1/8 to 3–1/4 inches.
4. Position the **left** blade front-to-rear (Fig. 60).
5. Measure the left blade at the **C** location (Fig. 60), from a level surface to the cutting edge of the blade tips (Fig. 61).
6. Record this measurement. This measurement needs to be 3–1/8 to 3–1/4 inches.

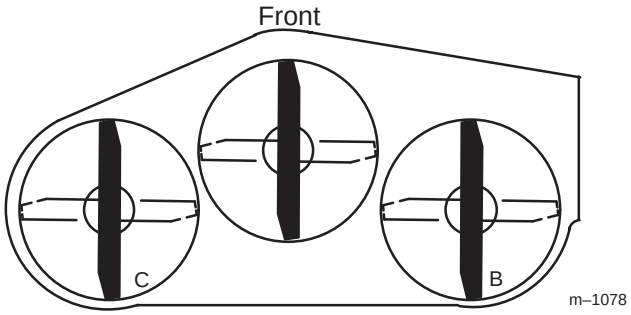

Figure 60

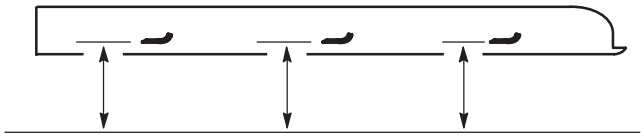

MEASURE FROM CUTTING EDGE TO A LEVEL SURFACE

m–2539

Figure 61

7. If the measurements at positions **B** or **C** are not correct, loosen the bolt attaching the rear chain to the rear support arm (Fig.).

8. Loosen the jam nut under the rear support arm and adjust the adjustment bolt to get a measurement of 3–1/8 to 3–1/4 inches.

Note: It is recommended that both sides of the mower are adjusted the same distance.

9. Tighten the jam nut under the rear support arm and tighten the bolt securing the chain to the rear support arm.

10. Adjust the opposite side if needed.

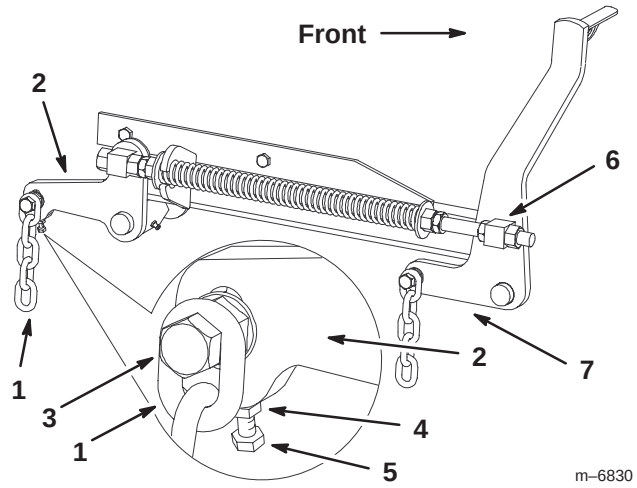

Figure 62

1. Rear chain
2. Rear support arm
3. Bolt
4. Jam Nut
5. Adjustment bolt
6. Front swivel
7. Front support arm

Adjusting the Front–to–Rear Mower Pitch

1. Position the **right** blade front-to-rear (Fig. 63).

2. Measure the right blade at the **A** location (Fig. 63), from a level surface to the cutting edge of the blade tip (Fig. 64).

3. Record this measurement.

4. Measure the right blade at the **B** location (Fig. 63), from a level surface to the cutting edge of the blade tip (Fig. 64).

5. Record this measurement.

6. The mower blade should be **a 1/4 to 3/8 inch (6 to 10 mm) lower at position *A* than at position *B*** (Fig. 63)**.** If it is not correct, proceed to the following steps.

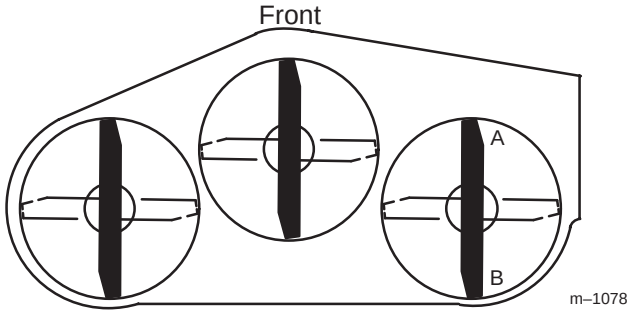

Figure 63

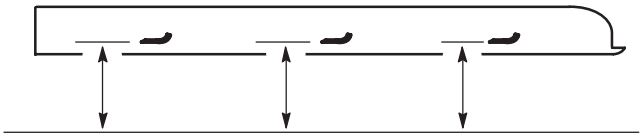

MEASURE FROM CUTTING EDGE TO A LEVEL SURFACE

m–2539

Figure 64

Note: Both of the front swivels need to be adjusted the same amount to maintain equal chain tension.

7. Loosen the front swivel jam nuts, at the front of the right and left swivels, approximately a 1/2 inch (13 mm) (Fig. 65).
8. Adjust the lift nuts on both the left and the right side of the machine to achieve **1/4 to 3/8 inch (6 to 10 mm) lower in front at *A* than in the rear at *B*** (Fig. 65).
9. Tighten both swivel jam nuts against the front swivel to lock the height.
10. Check to make sure there is equal tension on the chains and adjust again if needed.

Adjusting the Compression Spring

1. Raise the mower lift lever to the transport position (Fig. 16).
2. Check the distance between the two large washers, it needs to be 10–1/2 inches (26.7 cm) (Fig. 65).
3. Adjust this distance, by loosening the spring jam nut and turning the nut in front of each spring (Fig. 65). Turning the nut clockwise will shorten the spring; counter–clockwise will lengthen the spring.
4. Lock the nut into position by tightening the spring jam nut (Fig. 65).

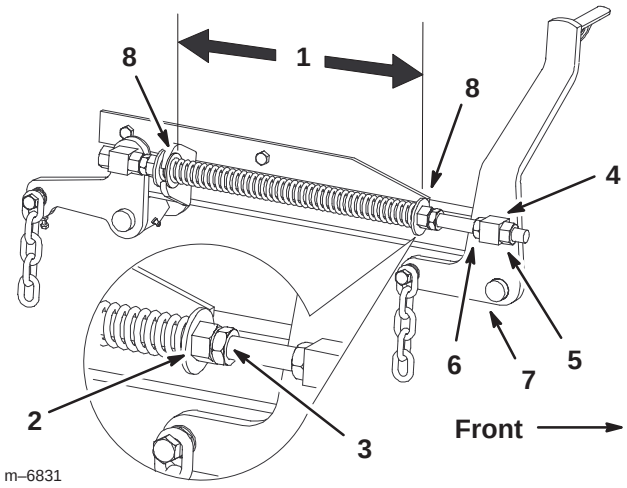

Figure 65

1. 10–1/2 inch (26.7 cm) between the large washers
2. Front nut
3. Spring jam nut
4. Front swivel
5. Swivel jam nut
6. Lift nut
7. Front support arm
8. Large washer

Cleaning Under the Deck

Remove grass buildup under the deck daily.

1. Disengage the PTO, move the motion control levers to the neutral locked position and set the parking brake.
2. Stop the engine, remove the key, and wait for all moving parts to stop before leaving the operating position.
3. Raise the deck to the transport position.
4. Raise the front of the machine by using the Z Stand; refer to Using the Z Stand, page 29.

Warning

Unit could fall onto someone and cause serious injury or death.

- **Use extreme caution when operating unit on Z Stand.**
- **Use only for cleaning deck and removing blades.**
- **Do not keep unit on Z Stand for extended periods of time.**
- **Always shut engine off and set parking brake before performing any maintenance to deck.**

Inspecting the Belts

Inspect all belts every 100 hours.

Check belts for cracks, frayed edges, burn marks, or any other damage. Replace damaged belts.

Replacing the Mower Belt

Squealing when the belt is rotating, blades slipping when cutting grass, frayed belt edges, burn marks and cracks are signs of a worn mower belt. Replace the mower belt if any of these conditions are evident.

1. Disengage the PTO, move the motion control levers to the neutral locked position and set the parking brake.
2. Stop the engine, remove the key, and wait for all moving parts to stop before leaving the operating position.
3. Remove the belt covers (Fig. 67).
4. Loosen the nut securing the idler plate and move the idler plate to relieve the belt tension on the idler pulley, then remove the worn mower belt (Fig. 69).
5. Install the new mower belt around the mower spindle pulleys, mower idler pulley, into the belt guides, into rear idler arm assembly, and the clutch (Fig. 66).

Important Check the amount of twist in the belt between the pulleys. Make sure it is only what is specified in Figure 66.

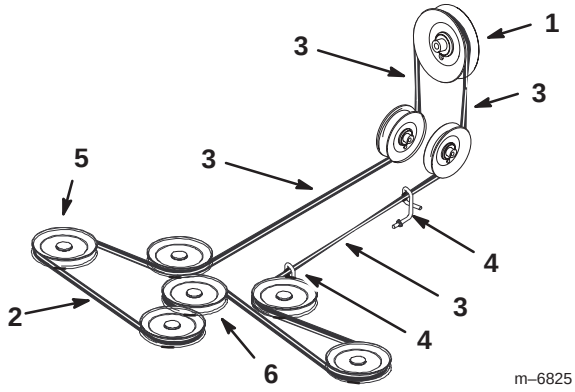

Figure 66

1. Clutch
2. Mower belt
3. 1/4 turn belt twist
4. Belt guide
5. Mower spindle pulley
6. Mower idler pulley

6. Adjust the belt tension, refer to Adjusting the Mower Belt Tension; page 49.
7. Install the belt covers and close the latches (Fig. 67).

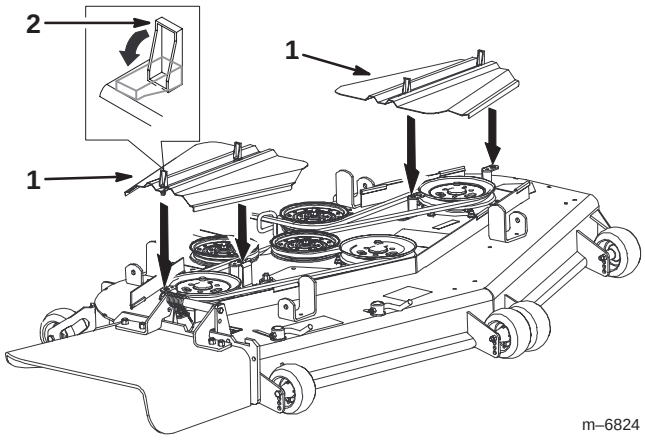

Figure 67

1. Belt cover
2. Latch

Adjusting the Mower Belt Tension

1. Disengage the PTO, move the motion control levers to the neutral locked position and set the parking brake.
2. Stop the engine, remove the key, and wait for all moving parts to stop before leaving the operating position.
3. Raise the mower to the transport position.

Important Check the amount of twist in the belt between the pulleys. Make sure it is only what is specified in Figure 66.

Important Check and make sure the belt is installed into both the front and rear belt guides (Fig 68).

4. Check the belt tension. The spring loaded idler center bolt needs to be near the top alignment hole in left support plate (Fig 68).

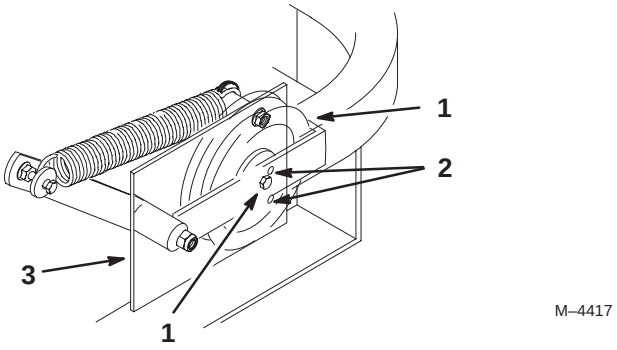

Figure 68

1. Center bolt
2. Alignment hole
3. Left support plate
4. Spring loaded idler

5. If adjustment is required, loosen the mower idler plate and adjust it (Fig. 69).

6. Insert a ratchet or breaker bar into the square hole in the mower idler plate to adjust the tension (Fig. 69).

7. To increase belt tension, rotate the mower idler plate until resistance is felt and rotation stops. Do not go past when it stops (Fig. 69).

8. Tighten the idler plate bolts (Fig. 69).

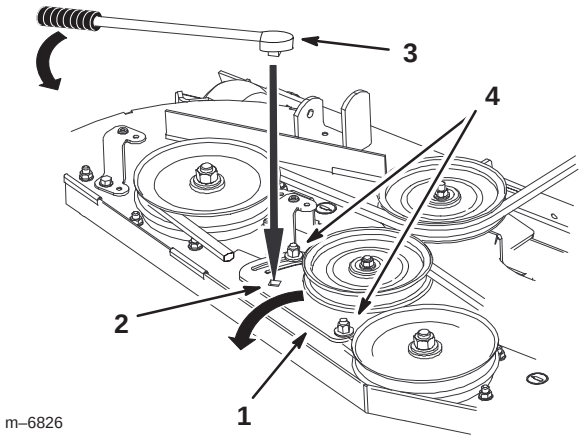

Figure 69

1. Mower idler plate
2. Square hole
3. Ratchet or breaker bar
4. Idler plate bolt

9. Check the distance from the rubber stop and the arm of the spring loaded idler pulley when the idler plate is tightened. It needs to be 0 to 1/4 inch (0 to 6 mm) from the rubber stop (Fig. 70).

10. Adjust the belt tension and the idler plate, if necessary, and tighten all hardware securely (Fig. 69).

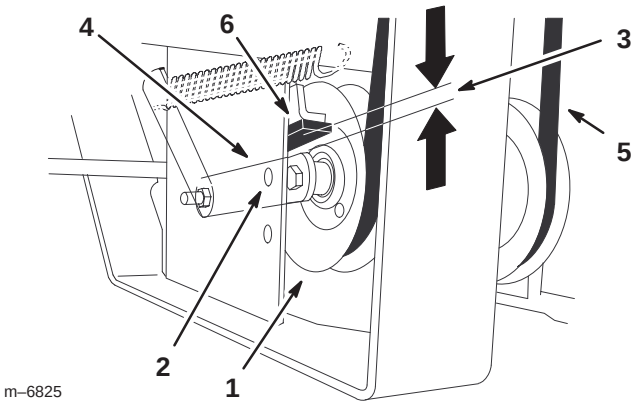

Figure 70

1. Spring loaded idler pulley
2. Top alignment hole
3. 0 to 1/4 inch gap (0 to 6 mm)
4. Idler pulley arm
5. Belt
6. Rubber bumper

11. If the mower idler plate contacts the end of the adjustment slot and more belt tension is required, a small change to the right side fixed idler can create more belt tension adjustment (Fig. 71).

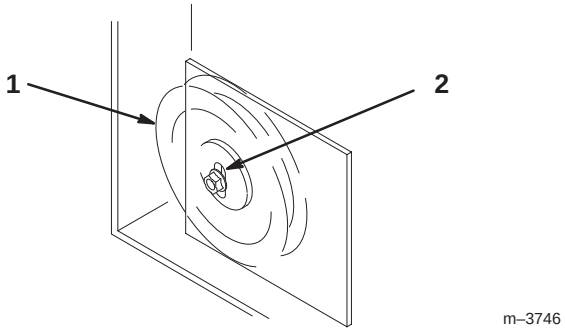

Figure 71

1. Fixed Idler
2. Adjustment slot

Replacing the Pump Drive Belt

Check pump drive belt for wear after every 50 hours of operation.

1. Pull the spring loaded idler down and remove the traction belt from the engine and hydro pump pulleys (Fig. 72). Remove the belt between the pulleys.

2. Install the new belt around the engine and hydro pump pulleys (Fig. 72).

3. Pull the spring loaded idler down and align it below the traction belt. Release the pressure on the spring loaded idler (Fig. 72).

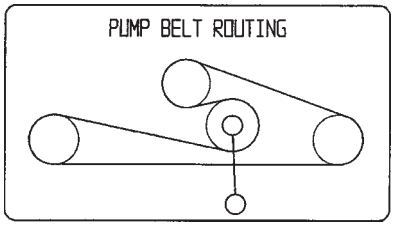

Figure 72

Adjusting the Parking Brake

Check the parking brake for proper adjustment.

1. Disengage the brake lever (lever down).
2. Measure the length of the spring. The measurement should be 2-3/4 inch (70 mm) between the washers (Fig. 73).
3. If an adjustment is necessary, loosen the jam nut below the spring and tighten the nut directly below the yoke (Fig. 73). Turn the nut until the correct measurement is obtained. Tighten the two nuts together and repeat on the opposite side of the unit.
4. Turn the nuts clockwise to shorten the spring length and counterclockwise to lengthen the spring.
5. Engage the parking brake, lever up.
6. Measure the distance between the trunnion roller and the collar on the brake rod. The measurement should be 3/16–1/4 inch (5–7 mm) (Fig. 73).
7. If an adjustment is necessary, loosen the jam nut directly below the yoke. Turn the bottom rod until the correct measurement is obtained (Fig. 73). Tighten the jam nut at the yoke.

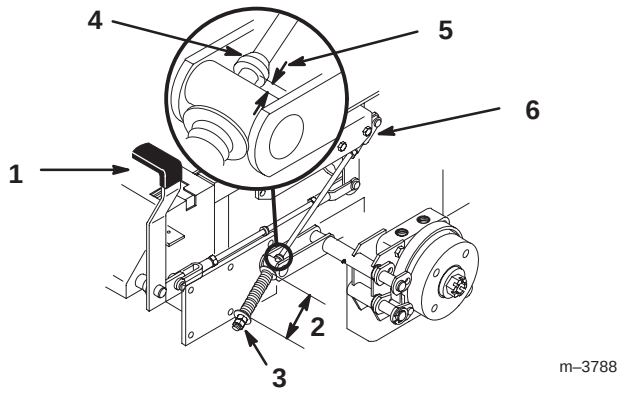

Figure 73

1. Brake lever
2. Spring, 2-3/4 inch (70 mm)
3. Adjusting nuts
4. Collar on brake rod
5. 3/16–1/4 inch (5–7 mm)
6. Jam nut and yoke

Servicing the Fuses

The electrical system is protected by fuses. It requires no maintenance, however, if a fuse blows, check the component/circuit for a malfunction or short.

Fuse: Main –20 amp, blade-type
Alternator –30 amp, blade-type
Fan–30 amp, blade-type

1. To gain access to the main fuse, unlatch the seat and tilt the seat forward. To gain access to the fan and alternator fuses, raise the seat and tilt the engine cover forward.
2. To replace a fuse, pull out on the fuse to remove it (Fig. 74).

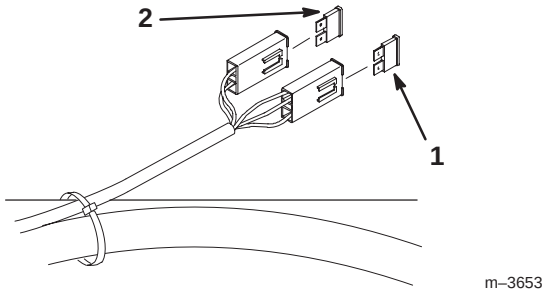

Figure 74

1. Fan—30 amp.
2. Main—20 amp.

Servicing the Battery

Warning

Battery posts, terminals, and related accessories contain lead and lead compounds, chemicals known to the State of California to cause cancer and reproductive harm. ***Wash hands after handling.***

Checking Electrolyte Level

1. With the engine off, open the hood to locate the battery.
2. Look at the side of the battery. The electrolyte must be up to the **upper** line (Fig. 75). Do not allow the electrolyte to get below the **lower** line (Fig. 75).
3. If the electrolyte is low, add the required amount of distilled water; refer to Adding Water to the Battery, page 53.

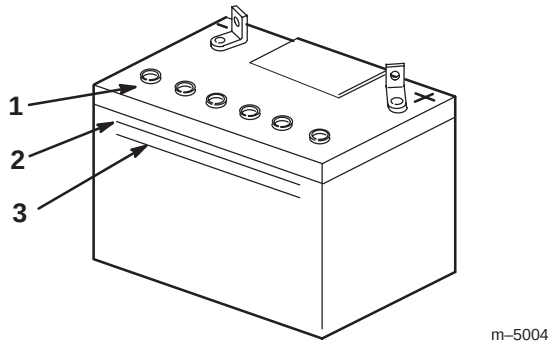

Figure 75

1. Filler caps
2. **Upper** line
3. **Lower** line

Danger

Battery electrolyte contains sulfuric acid which is a deadly poison and causes severe burns.

- **Do not drink electrolyte and avoid contact with skin, eyes or clothing. Wear safety glasses to shield your eyes and robber gloves to protect your hands.**
- **Fill the battery where clean water is always available for flushing the skin.**
- **Follow all instructions and comply with all safety messages on the electrolyte container.**

Installing the Battery

1. Position battery in tray with terminal posts toward the engine (Fig. 76).
2. First, install the positive (red) battery cable to positive (+) battery terminal.
3. Then install negative battery cable and ground wire to the negative (–) battery terminal.
4. Secure cables with 2 bolts (1/4 x 3/4 inch), 2 washers (1/4 inch), and 2 locknuts (1/4 inch) (Fig. 76).
5. Slide the red terminal boot onto the positive (red) battery post.
6. Secure battery with J-bolts, hold down clamp and 2 washers (1/4 inch), and 2 wing nuts (1/4 inch) (Fig. 76).

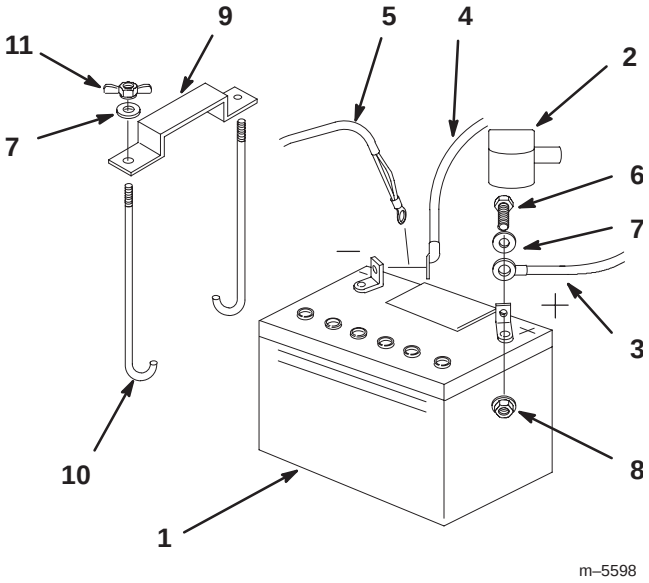

Figure 76

1. Battery
2. Terminal boot
3. Positive battery cable
4. Negative battery cable
5. Ground wire
6. Bolt, 1/4 x 3/4 inch
7. Washer, 1/4 inch
8. Locknut, 1/4 inch
9. Battery clamp
10. J-bolts
11. Wing nut, 1/4 inch

Removing the Battery

Warning

Battery terminals or metal tools could short against metal machine components causing sparks. Sparks can cause the battery gasses to explode, resulting in personal injury.

- **When removing or installing the battery, do not allow the battery terminals to touch any metal parts of the machine.**
- **Do not allow metal tools to short between the battery terminals and metal parts of the machine.**

Warning

Incorrect battery cable routing could damage the machine and cables causing sparks. Sparks can cause the battery gasses to explode, resulting in personal injury.

- **Always *Disconnect* the negative (black) battery cable before disconnecting the positive (red) cable.**
- **Always *Reconnect* the positive (red) battery cable before reconnecting the negative (black) cable.**

1. Disengage the power take off (PTO), set the parking brake, and turn the ignition key to off. Remove the key.
2. Unlatch the seat and tilt the seat up.
3. First disconnect the negative battery cable and ground wire from the negative (–) battery terminal (Fig. 76).
4. Slide the red terminal boot off the positive (red) battery terminal. Then remove positive (red) battery cable (Fig. 76).
5. Remove both wing nuts (1/4 inch) securing the battery clamp (Fig. 76).
6. Remove the battery.

Adding Water to the Battery

Note: Never fill the battery with distilled water while the battery installed in the machine. Electrolyte could be spilled on other parts and cause corrosion.

The best time to add distilled water to the battery is just before you operate the machine. This lets the water mix thoroughly with the electrolyte solution.

1. Remove the battery from the machine.
2. Clean the top of the battery with a paper towel.
3. Remove the vent caps from the battery (Fig. 75).
4. Slowly pour distilled water into each battery cell until the level is up to the **upper** line (Fig. 75) on the battery case.

Important Do not overfill the battery because electrolyte (sulfuric acid) can cause severe corrosion and damage to the chassis.

5. Wait five to ten minutes after filling the battery cells. Add distilled water, if necessary, until the electrolyte level is up to the **upper** line (Fig. 75) on the battery case.
6. Reinstall battery vent caps.

Charging the Battery

Warning

Charging the battery produces gasses that can explode.

Never smoke near the battery and keep sparks and flames away from battery.

Important Always keep the battery fully charged (1.265 specific gravity). This is especially important to prevent battery damage when the temperature is below 32°F (0°C).

1. Remove the battery from the chassis; refer to Removing the Battery, page 53.
2. Check the electrolyte level; refer to Checking Electrolyte Level, page 52.
3. Make sure the filler caps are installed in battery. Charge battery for 10 to 15 minutes at 25 to 30 amps or 30 minutes at 4–6 amps.
4. When the battery is fully charged, unplug the charger from the electrical outlet, then disconnect the charger leads from the battery posts (Fig. 77).

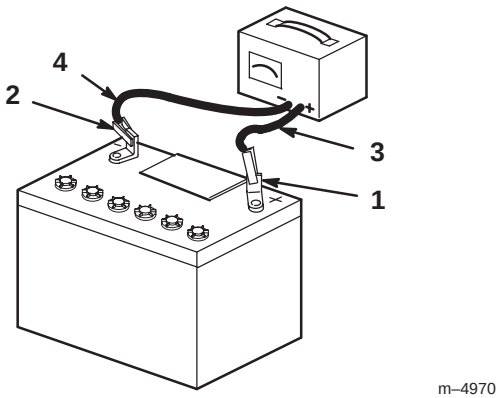

Figure 77

1. Positive Battery Post
2. Negative Battery Post
3. Red (+) Charger Lead
4. Black (–) Charger Lead

5. Install the battery in the machine and connect the battery cables; refer to Installing the Battery on page 52.

Note: Do not run the machine with the battery disconnected, electrical damage may occur.

Replacing the Grass Deflector

Warning

An uncovered discharge opening could allow the lawn mower to throw objects in the operator's or bystander's direction and result in serious injury. Also, contact with the blade could occur.

- **Never operate the lawn mower unless you install a cover plate, a mulch plate, or a grass chute and catcher.**
- **Make sure the grass deflector is in the down position.**

1. Remove the locknut, bolt, spring and spacer holding the deflector to the pivot brackets (Fig. 78). Remove damaged or worn grass deflector.
2. Place spacer and spring onto grass deflector. Place the **L** end of spring behind deck edge.

Note: Make sure the **L** end of spring is installed behind deck edge before installing the bolt as shown in figure 78.

3. Install bolt and nut. Place **J** hook end of spring around grass deflector (Fig. 78).

Important The grass deflector must be able to lower down into position. Lift the deflector up to test that it lowers into the full down position.

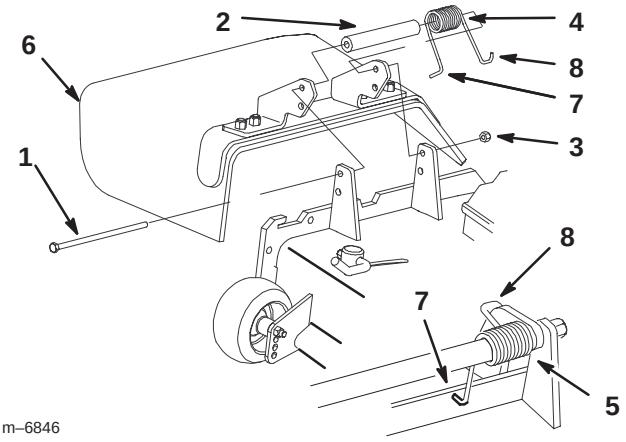

Figure 78

1. Bolt
2. Spacer
3. Locknut
4. Spring
5. Spring installed
6. Grass Deflector
7. **L** end of spring, place behind deck edge before installing bolt
8. **J** hook end of spring

Waste Disposal

Engine oil, hydraulic oil, and engine coolant are pollutants to the environment. Dispose of these according to your state and local regulations.

Mercury Tilt Switch

The tilt switch on this unit is located under the seat. Unlatch the seat and tilt the seat up to gain access.

The tilt switch on this unit contains mercury, a hazardous material. Mercury that is outside a sealed container vaporizes at room temperature. The vapors are harmful. Mercury can be absorbed through the skin. Do not attempt to open or repair this switch.

A very small amount of mercury is contained in a hermetically sealed body. The steel switch is then potted in a hard epoxy in a plastic case. It is unlikely that the mercury will ever escape from the enclosure. These high performance and reliable inexpensive switches are recyclable.

Mercury is an important and beneficial compound but requires special care in handling and disposal. When used and managed properly, mercury is not a threat to people or the environment. This information is presented to users so that they are aware that these switches contain mercury and will apply sound disposal practices when these devices reach their normal end of life or are damaged.

Mercury Tilt Switch Disposal

Several states have passed laws concerning the disposal of devices containing mercury. In all the remaining states it is advisable to follow similar procedures. The laws state that these sealed devices contain mercury and should not be placed in the garbage until the mercury is removed and reused, recycled, or otherwise managed to ensure that it does not become part of solid waste or waters. Management and disposal practices must be within relevant federal, state, or local laws.

Return the switch to your Toro dealer if it is faulty and is being replaced or if the unit containing the switch is no longer operating and is being scrapped. If the switch is damaged or broken open, use extreme caution in handling. Call your local waste management authority or Toro Customer Service for instructions.

Caution

The mercury contained in the tilt switch is poisonous and exposure to mercury can cause severe illness.

- **Never attempt to open or repair the tilt switch.**
- **Avoid contact with the mercury.**

Wiring Diagram

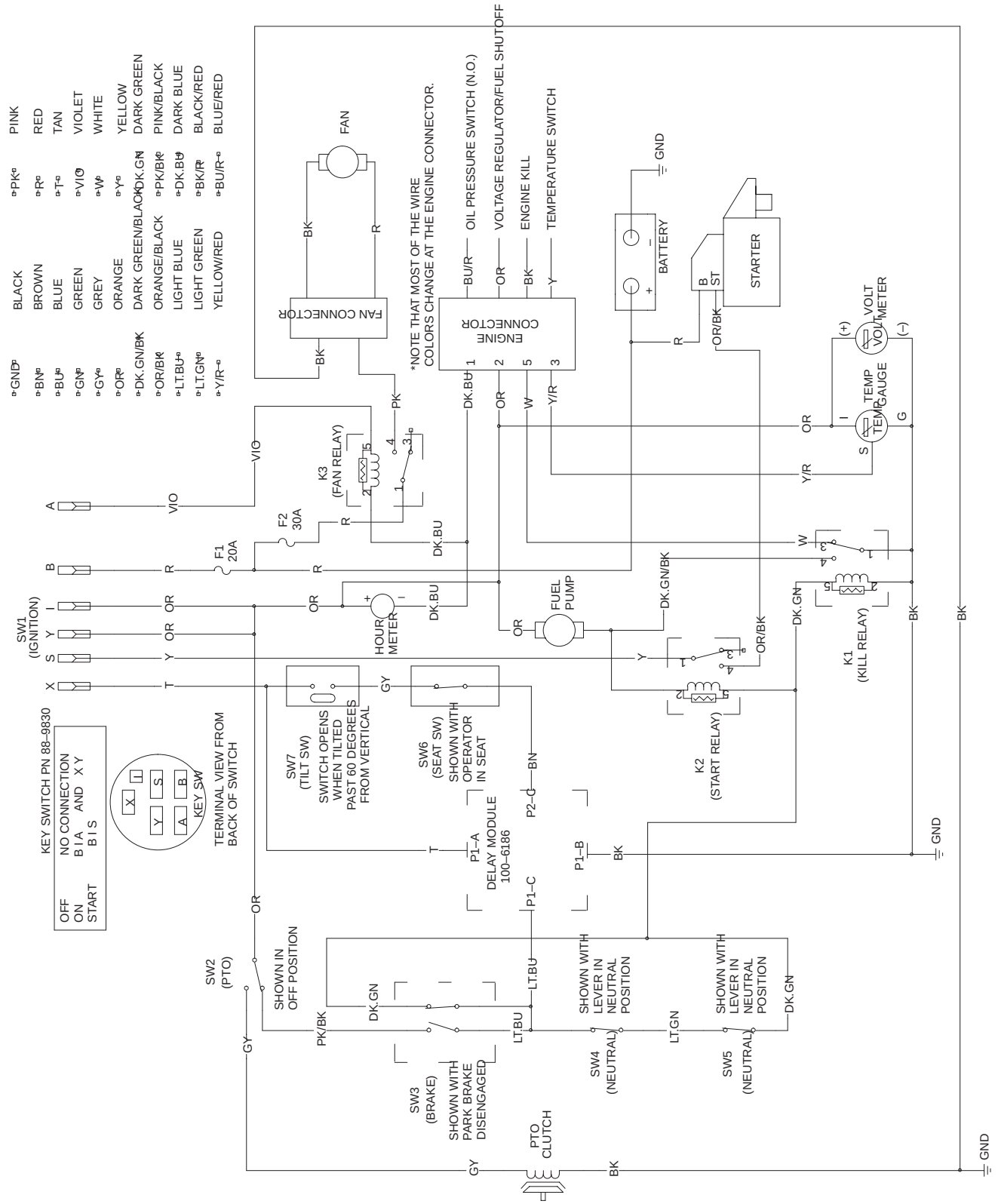

Cleaning and Storage

1. Disengage the power take off (PTO), set the parking brake, and turn the ignition key to Off. Remove the key.
2. Remove grass clippings, dirt, and grime from the external parts of the entire machine, especially the engine and hydraulic system. Clean dirt and chaff from the outside of the engine cylinder head fins and blower housing.

Important You can wash the machine with mild detergent and water. Do not pressure wash the machine. Avoid excessive use of water, especially near the control panel, engine, hydraulic pumps, and motors.

3. Service the air cleaner; refer to Servicing the Air Cleaner, page 34.
4. Grease and oil the machine; refer to Greasing and Lubrication, page 39.
5. Change the crankcase oil; refer to Servicing the Engine Oil, page 35.
6. Change the hydraulic filter; refer to Servicing the Hydraulic System, page 41.
7. Check the tire pressure; refer to Checking the Tire Pressure, page 41.
8. Charge the battery; refer to Servicing the Battery, page 52.
9. Scrape any heavy buildup of grass and dirt from the underside of the mower, then wash the mower with a garden hose.

Note: Run the machine with the PTO engaged and the engine at high idle for 2 to 5 minutes after washing.

10. Check the condition of the blades; refer to Servicing the Cutting Blades, page 32.
11. Prepare the machine for storage when non-use occurs over 30 days. Prepare the machine for storage as follows:

A. Add a petroleum based stabilizer/conditioner to fuel in the tank. Follow mixing instructions from the stabilizer manufacturer. **Do not use an alcohol based stabilizer (ethanol or methanol).**

Note: A fuel stabilizer/conditioner is most effective when mixed with fresh gasoline and used at all times.

B. Run the engine to distribute conditioned fuel through the fuel system (5 minutes).

C. Stop the engine, allow it to cool, and drain the fuel tank; refer to Draining the Fuel Tank, page 39.

D. Restart the engine and run it until it stops.

E. Choke or prime the engine. Start and run the engine until it will not start. Operate the primer, if equipped on the machine, several times to ensure that no fuel remains in the primer system.

F. Dispose of fuel properly. Recycle as per local codes.

Important Do not store stabilizer/conditioned gasoline over 90 days.

12. Remove the spark plug(s) and check its condition; refer to Servicing the Spark Plug, page 37. With the spark plug(s) removed from the engine, pour two tablespoons of engine oil into the spark plug hole. Now use the starter to crank the engine and distribute the oil inside the cylinder. Install the spark plug(s). Do not install the wire on the spark plug(s).
13. Check and tighten all bolts, nuts, and screws. Repair or replace any part that is damaged.
14. Paint all scratched or bare metal surfaces. Paint is available from your Authorized Service Dealer.
15. Store the machine in a clean, dry garage or storage area. Remove the key from the ignition switch and keep it out of reach of children or other unauthorized users. Cover the machine to protect it and keep it clean.

Troubleshooting

Problem	Possible Causes	Corrective Action
Starter does not crank	1. Blade control (PTO) is engaged. 2. Parking brake is not on. 3. Operator is not seated. 4. Battery is dead. 5. Electrical connections are corroded or loose. 6. Fuse is blown. 7. Relay or switch is defective.	1. Move blade control (PTO) to disengaged. 2. Set parking brake. 3. Sit on the seat. 4. Charge the battery. 5. Check electrical connections for good contact. 6. Replace fuse. 7. Contact Authorized Service Dealer.
Engine will not start, starts hard, or fails to keep running.	1. Fuel tank is empty. 2. Choke is not on. 3. Air cleaner is dirty. 4. Spark plug wires are loose or disconnected. 5. Spark plugs are pitted, fouled, or gap is incorrect. 6. Dirt in fuel filter. 7. Dirt, water, or stale fuel is in fuel system.	1. Fill fuel tank with gasoline. 2. Move choke lever to on. 3. Clean or replace air cleaner element. 4. Install wires on spark plug. 5. Install new, correctly gapped spark plugs. 6. Replace fuel filter. 7. Contact Authorized Service Dealer.
Engine loses power.	1. Engine load is excessive. 2. Air cleaner is dirty. 3. Oil level in crankcase is low. 4. Cooling fins and air passages under engine blower housing are plugged. 5. Spark plugs are pitted, fouled, or gap is incorrect. 6. Dirt in fuel filter. 7. Dirt, water, or stale fuel is in fuel system.	1. Reduce ground speed. 2. Clean air cleaner element. 3. Add oil to crankcase. 4. Remove obstruction from cooling fins and air passages. 5. Install new, correctly gapped spark plugs. 6. Replace fuel filter. 7. Contact Authorized Service Dealer.
Engine overheats.	1. More coolant is needed. 2. (3) air intake screens are dirty. 3. Restricted air flow into the engine. 4. Radiator fins are dirty.	1. Check and add coolant. 2. Clean with every use. 3. Inspect and clean the radiator screen with every use. 4. Clean the radiator fins.

Problem	Possible Causes	Corrective Action
	5. The crankcase oil level is incorrect.	5. Fill or drain to the full mark.
	6. The fuel mixture is lean.	6. Contact your Authorized Service Dealer.
	7. Excessive loading.	7. Reduce load; use lower ground speed.
Machine does not drive.	1. Traction belt is worn, loose or broken.	1. Contact Authorized Service Dealer.
	2. Traction belt is off pulley.	2. Contact Authorized Service Dealer.
	3. Hydro fluid level low.	3. Add hydro fluid to reservoir.
Abnormal vibration.	1. Cutting blade(s) is/are bent or unbalanced.	1. Install new cutting blade(s).
	2. Blade mounting bolt is loose.	2. Tighten blade mounting bolt.
	3. Engine mounting bolts are loose.	3. Tighten engine mounting bolts.
	4. Loose engine pulley, idler pulley, or blade pulley.	4. Tighten the appropriate pulley.
	5. Engine pulley is damaged.	5. Contact Authorized Service Dealer.
	6. Blade spindle bent.	6. Contact Authorized Service Dealer.
Uneven cutting height.	1. Blade(s) not sharp.	1. Sharpen blade(s).
	2. Cutting blade(s) is/are bent.	2. Install new cutting blade(s).
	3. Mower is not level.	3. Level mower from side-to-side and front-to-rear.
	4. Anti–scalp roller not set correctly.	4. Adjust gage wheel height.
	5. Underside of mower is dirty.	5. Clean the underside of the mower.
	6. Tire pressure is incorrect.	6. Adjust tire pressure.
	7. Blade spindle bent.	7. Contact Authorized Service Dealer.
Blades do not rotate.	1. Mower belt is off the pulley.	1. Install the mower belt and check the adjusting plate, idler arm and spring, and belt guides for correct position
	2. Mower belt is worn, loose or broken.	2. Install a new mower belt.
	3. Electric clutch does not engage.	3. Contact Authorized Service Dealer.
	4. Electric clutch is worn.	4. Contact Authorized Service Dealer.

LCE

The Toro Total Coverage Guarantee

A Limited Warranty

Conditions and Products Covered

The Toro Company and its affiliate, Toro Warranty Company, pursuant to an agreement between them, jointly promise to repair the listed Toro Products if defective in materials or workmanship. The following time periods apply from the date of purchase:

Products	Warranty Period
• All Products	1 year
• All Spindles	2 years parts and labor; third year, parts only
• Engines/Hydraulic Systems* on the following: Outfront and Mid-Mount Z's ProLine Mid-Size Mowers Groundsmaster® Riding Mowers Backpack Blowers	2 years
• Deck Shells (36″–72″) on the following: ProLine Mid-Size Mowers Mid-Mount Z's	2 years
• Electric Clutch on 200 Series Mid-Mount Z's	2 years

This warranty includes the cost of parts and labor, but you must pay transportation costs.

This warranty applies to:

- Outfront and Mid-Mount Z's
- ProLine Mid-Size Mowers
- Groundsmaster Riding Mowers
- Turf Maintenance Equipment
- Debris Management Equipment

* Some engines used on Toro LCE Products are warranted by the engine manufacturer.

Instructions for Obtaining Warranty Service

If you think that your Toro Product contains a defect in materials or workmanship, follow this procedure:

1. Contact any Toro Authorized or Master Service Dealer to arrange service at their dealership. To locate a dealer convenient to you, access our website at www.Toro.com. U.S. Customers may also call 800-348-2424.
2. Bring the product and your proof of purchase (sales receipt) to the Service Dealer.

If for any reason you are dissatisfied with the Service Dealer's analysis or with the assistance provided, contact us at:

LCB Customer Service Department
Toro Warranty Company
8111 Lyndale Avenue South
Bloomington, MN 55420-1196
888-577-7466 (U.S. customers)
877-484-9255 (Canada customers)

Owner Responsibilities

You must maintain your Toro Product by following the maintenance procedures described in the operator's manual. Such routine maintenance, whether performed by a dealer or by you, is at your expense.

Items and Conditions Not Covered

There is no other express warranty except for special emission system coverage on some products. This express warranty does not cover the following:

- Cost of regular maintenance service or parts, such as filters, fuel, lubricants, tune-up parts, blade sharpening, brake and clutch adjustments.
- Any product or part which has been altered or misused or required replacement or repair due to normal wear, accidents, or lack of proper maintenance.
- Repairs necessary due to improper fuel, contaminants in the fuel system, or failure to properly prepare the fuel system prior to any period of non-use over three months.
- Pickup and delivery charges.

All repairs covered by this warranty must be performed by an Authorized Toro Service Dealer using Toro approved replacement parts.

General Conditions

Repair by an Authorized Toro Service Dealer is your sole remedy under this warranty.

Neither The Toro Company nor Toro Warranty Company is liable for indirect, incidental or consequential damages in connection with the use of the Toro Products covered by this warranty, including any cost or expense of providing substitute equipment or service during reasonable periods of malfunction or non-use pending completion of repairs under this warranty.

Some states do not allow exclusions of incidental or consequential damages, or limitations on how long an implied warranty lasts, so the above exclusions and limitations may not apply to you.

All implied warranties of merchantability (that the product is fit for ordinary use) and fitness for use (that the product is fit for a particular purpose) are limited to the duration of the express warranty.

This warranty gives you specific legal rights, and you may also have other rights which vary from state to state.

Countries Other than the United States or Canada

Customers who have purchased Toro products exported from the United States or Canada should contact their Toro Distributor (Dealer) to obtain guarantee policies for your country, province, or state. If for any reason you are dissatisfied with your Distributor's service or have difficulty obtaining guarantee information, contact the Toro importer. If all other remedies fail, you may contact us at Toro Warranty Company.

Part No. 374-0037 Rev. C