Form No. 3329-446 Rev A

CCR Powerlite® 325
Snowthrower
Model No. 38183—Serial No. 240000001 and Up

Operator's Manual

Introduction

Read this manual carefully to learn how to operate and maintain your product properly and to avoid injury and product damage. You are responsible for operating the product properly and safely.

You may contact Toro directly at www.Toro.com for product and accessory information, help finding a dealer, or to register your product.

Whenever you need service, genuine Toro parts, or additional information, contact an Authorized Service Dealer or Toro Customer Service and have the model and serial numbers of your product ready. The illustration below identifies the location of the model and serial numbers on the product. Write the numbers in the space provided below:

Model #:

Serial #:

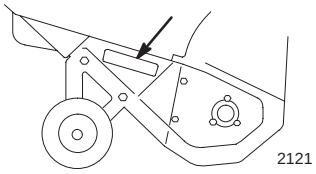

This manual uses 2 words to highlight information. **Important:** calls attention to special mechanical information and **Note:** emphasizes general information worthy of special attention.

Safety

Read and understand the contents of this manual before the engine is ever started.

⚠ **This is the safety alert symbol. It is used to alert you to potential personal injury hazards. Obey all safety messages that follow this symbol to avoid possible injury or death.**

Improperly using or maintaining this snowthrower could result in injury or death. To reduce this potential, comply with the following safety instructions.

The following instructions have been adapted from the ANSI/OPEI standard B71.3–1995 and the ISO 8437:1989 standard.

Training

- Read the operator's manual carefully. Be thoroughly familiar with the controls and the proper use of the equipment. Know how to stop the unit and disengage the controls quickly.
- Never allow children to operate the snowthrower. Never allow adults to operate the snowthrower without proper instruction.
- Keep the area of operation clear of all persons (particularly small children) and pets.
- Exercise caution to avoid slipping or falling.

Preparation

- Thoroughly inspect the area where you will use the snowthrower. Remove all doormats, sleds, boards, wires, and other foreign objects.
- Release the control bar to disengage the rotor blades before starting the engine.
- Do not operate the snowthrower without wearing adequate winter garments. Wear footwear that will improve your footing on slippery surfaces.
- Handle fuel with care; it is highly flammable.
  - Use an approved fuel container.
  - Never add fuel to a running or hot engine.
  - Fill the fuel tank outdoors with extreme care. Never fill the fuel tank indoors.
  - Replace the fuel tank cap securely and wipe up any spilled fuel.
- Use only the power cord supplied with the snowthrower and a receptacle appropriate for use with the power cord for electric-start motors.
- Never attempt to make any adjustments while the engine is running, except where specifically recommended by Toro.
- Let the engine and the snowthrower adjust to the outdoor temperature before starting to clear snow.
- Operating any powered machine can result in foreign objects being thrown into the eyes. Always wear safety glasses or eye shields while operating, adjusting, or repairing the snowthrower.

© 2003—The Toro Company
8111 Lyndale Ave., Bloomington, MN 55420, USA

Printed in the USA
All Rights Reserved

Original Instructions (GB)
Register your product at www.Toro.com

Operation

- Do not put hands or feet near or under rotating parts. Keep clear of the discharge opening at all times.
- Exercise extreme caution when crossing gravel drives, walks, or roads. Stay alert for hidden hazards or traffic.
- Do not attempt to clear snow from a crushed-rock or gravel surface. This product is intended for use only on paved surfaces.
- After striking a foreign object, stop the engine, remove the ignition key, thoroughly inspect the snowthrower for any damage, and repair the damage before operating the snowthrower.
- If the unit should start to vibrate abnormally, stop the engine and check immediately for the cause. Vibration is generally a warning of trouble.
- Stop the engine whenever you leave the operating position, before unclogging the discharge chute, and when making any repairs, adjustments, or inspections.
- When cleaning, repairing, or inspecting, make certain that the rotor blades and all moving parts have stopped.
- Do not run the engine indoors, except when starting it and for moving the snowthrower in or out of the building. Open the outside doors; exhaust fumes are dangerous.
- Do not clear snow across the face of slopes. Exercise extreme caution when changing direction on slopes. Do not attempt to clear steep slopes.
- Never operate the snowthrower without proper guards, plates, or other safety protective devices in place.
- Never operate the snowthrower near glass enclosures, automobiles, window wells, and drop-offs without properly adjusting the snow discharge angle. Keep children and pets away.
- Do not overload the machine capacity by attempting to clear snow at too fast a rate.
- Look behind and use care when backing up with the snowthrower.
- Never direct the discharge at bystanders or allow anyone in front of the unit.
- Never operate the snowthrower without good visibility or light. Always be sure of your footing, and keep a firm hold on the handle. Walk; never run.

Maintenance and Storage

- Check all fasteners at frequent intervals for proper tightness to be sure that the equipment is in safe working condition.
- Never store the machine with fuel in the fuel tank inside a building where ignition sources are present, such as hot water and space heaters and clothes dryers. Allow the engine to cool before storing in any enclosure.
- Always refer to this operator's manual for important details if the snowthrower is to be stored for an extended period.
- Maintain or replace safety and instruction labels when necessary.

Toro Snowthrower Safety

The following list contains safety information specific to Toro products or other safety information that you must know.

- **Rotating rotor blades can injure fingers or hands.** Stay behind the handles and away from the discharge opening while operating the snowthrower. **Keep your face, hands, feet, and any other part of your body or clothing away from moving or rotating parts.**
- Before adjusting, cleaning, repairing, and inspecting the snowthrower, and before unclogging the discharge chute, **stop the engine, remove the key, and wait for all moving parts to stop**.
- Use a stick, **not your hands**, to remove obstructions from the discharge chute.
- **Before** leaving the operating position, stop the engine, remove the key, and wait for all moving parts to stop.
- Do not wear loose-fitting clothing that could get caught in moving parts.
- If a shield, safety device, or decal is damaged, illegible, or lost, repair or replace it before beginning operation. Also, tighten any loose fasteners.
- **Do not** smoke while handling gasoline.
- **Do not** use the snowthrower on a roof.
- Do not touch the engine while it is running or soon after it has stopped because the engine may be hot enough to cause a burn.
- Perform only those maintenance instructions described in this manual. Before performing any maintenance, service, or adjustment, stop the engine, remove the key, and disconnect the wire from the spark plug. If major repairs are ever needed, contact your Authorized Service Dealer.

- Do not change the governor settings on the engine.
- When storing the snowthrower for more than 30 days, drain the fuel from the fuel tank to prevent a potential hazard. Store fuel in an approved fuel container. Remove the key from the ignition switch before storing the snowthrower.
- Purchase only genuine Toro replacement parts and accessories.

Sound Pressure

This unit has a maximum sound pressure level at the operator's ear of 90 dBA, based on measurements of identical machines per Directive 98/37/EC.

Sound Power

This unit has a guaranteed sound power level of 107 dBA, based on measurements of identical machines per Directive 2000/14/EC.

Vibration

This unit does not exceed a hand/arm vibration level of 11.4 m/s^2, based on measurements of identical machines per Directive 98/37/EC.

Safety/Instruction Decals

Important: Safety and instruction decals are located near areas of potential danger. Replace damaged decals.



94-2560

1. Cutting/dismembermenthazard, impeller—stay away from moving parts; remove the key and read the instructions before servicing or performing maintenance.

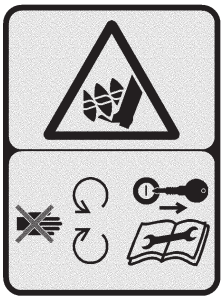

94-2562

1. Cutting/dismemberment hazard, auger—stay away from moving parts; remove the key and read the instructions before servicing or performing maintenance.

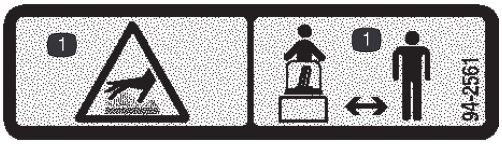

94-2561

1. Hot surface/burn hazard—keep bystanders a safe distance from the machine.

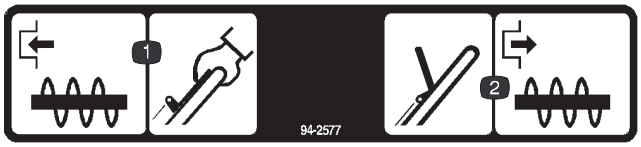

94-2577

1. To engage the auger, hold the control bar against the handle.
2. To disengage the auger, release the control bar.

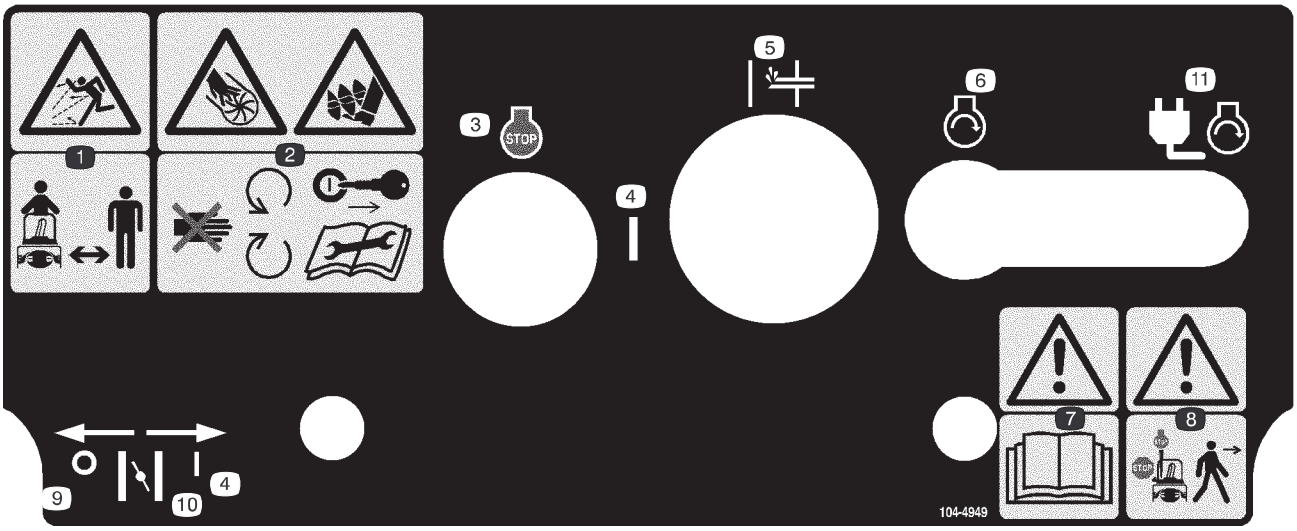

104-4949

1. Thrown object hazard—keep bystanders a safe distance from the snowthrower.
2. Cutting/dismemberment hazard, impeller and auger—stay away from moving parts; remove the key and read the instructions before servicing or performing maintenance.
3. Engine—stop
4. On
5. Primer
6. Engine—start
7. Warning—read the *Operator's Manual.*
8. Warning—stop the engine before leaving the machine.
9. Off
10. Choke
11. Electric start

Product Overview

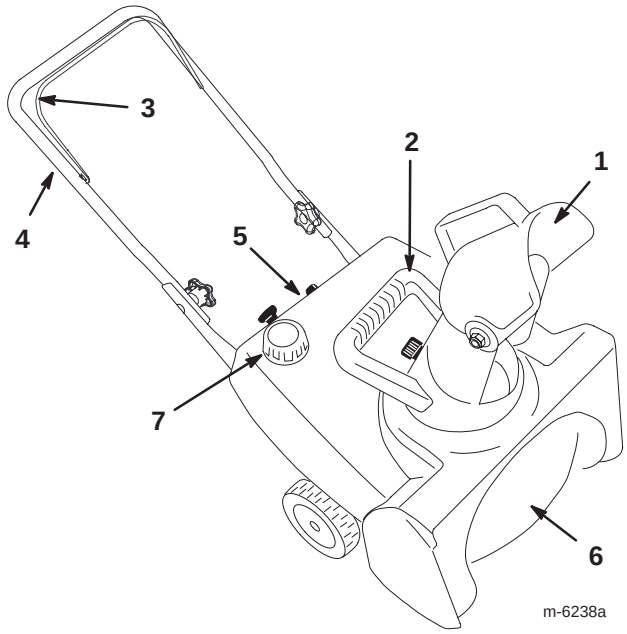

1. Discharge chute
2. Chute handle
3. Control bar
4. Handle
5. Control panel
6. Rotor blade
7. Fuel tank cap

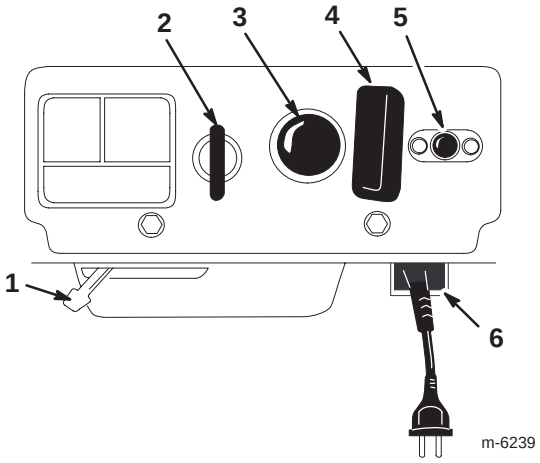

1. Choke lever
2. Key switch
3. Primer
4. Recoil starter
5. Electric-start button
6. Power cord connection

Setup

Installing the Handle

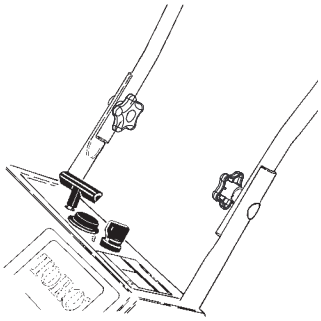

1. Position the ends of the upper handle on the inside of the lower handle and align the holes.

2. Insert the oval-head bolts into the aligned holes, with the bolt heads on the outside of the handle.

3. Install the curved washers and the handle knobs on the oval-head bolts and **tighten the knobs securely.**

Installing the Discharge Chute

1. Position the holes in the sides of the discharge chute (A) over the bolts ends (B) on the sides of the chute handle.

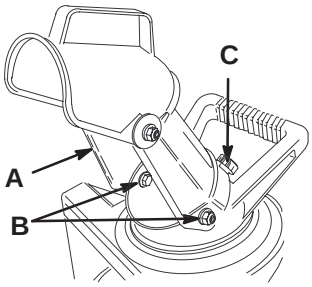

2. Secure the sides of the discharge chute with 2 washers and 2 locknuts.

3. Rotate the discharge chute to the upright position.

4. Install the washer and locknut (C) **tightly** onto the bolt end at the rear of the discharge chute.

Installing the Control Cable

Important: Ensure that the control cable is in the groove of the cable pulley (A) located on the lower left side of the snowthrower.

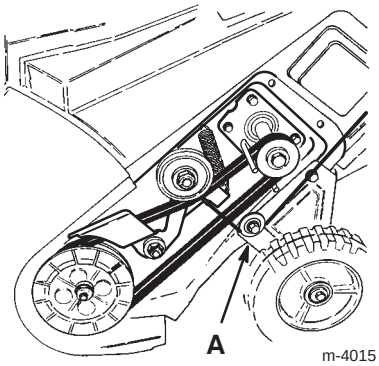

1. Route the control cable through the loop on the left side of the snowthrower housing.

2. Hook the spring (A) into the round hole at the end of the cable adjuster (B).

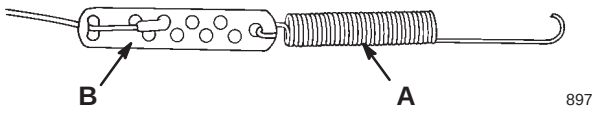

3. Secure the end of the cable to the cable adjuster.

4. Slide the spring cover (A) over the spring and the cable adjuster and push the spring end through the hole at the end of the spring cover.

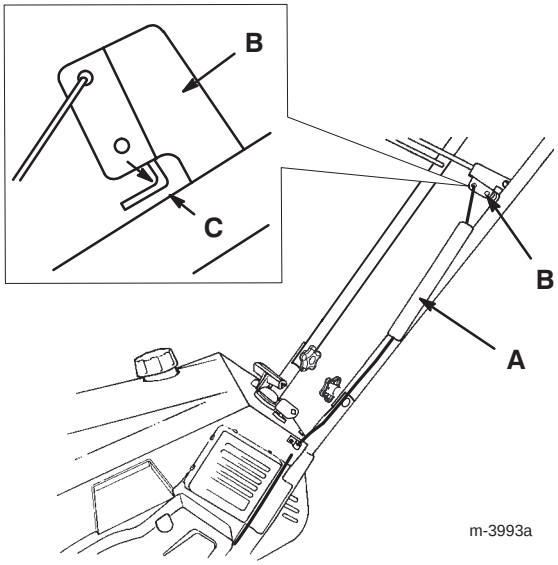

5. Hook the spring into the top hole of the control bar bracket (B above).

6. Move the control bar back toward the handle to remove the slack in the cable, and ensure that the gap between the control bar and the handle (Refer to C in the inset above) is 1/16 to 1/8-inch (2 to 3 mm).

7. To adjust this gap, refer to Adjusting the Control Cable on page 10.

Important: The control cable must contain slack when you disengage the control bar.

Before Starting

Gasoline is extremely flammable and explosive. A fire or explosion from gasoline can burn you and others.

- **To prevent a static charge from igniting the gasoline, place the container and/or snowthrower on the ground before filling, not in a vehicle or on an object.**
- **Fill the tank outdoors when the engine is cold. Wipe up spills.**
- **Do not handle gasoline when smoking or around an open flame or sparks.**
- **Store gasoline in an approved fuel container, out of the reach of children.**

Mixing Gasoline and Oil

This snowthrower uses a 50:1 gasoline-to-oil mixture. Use **Toro 50:1 2-Cycle Oil (Fuel Stabilizer Added)** or an equivalent high-grade, NMMA TCW-certified two-cycle oil.

Important: To prevent engine damage, **do not** use automotive oil (such as SAE 30 or 10W30) or fuel mixed at the wrong gasoline-to-oil ratio.

1. Pour a half US gallon (1.9 liters) of fresh, unleaded gasoline into an approved fuel container.

2. Add two-cycle oil to the gasoline according to the chart below:

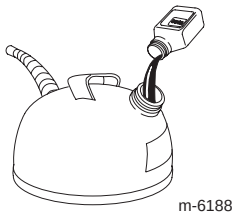

50:1 Gasoline-to-Oil Ratio Mixing Chart	
Gasoline	Oil
1 US gallon (3.8 liters)	2.6 ounces (80 ml)
2 US gallons (7.6 liters)	5.2 ounces (160 ml)

3. Install the cap on the fuel container.

4. Shake the container to mix the gasoline and oil thoroughly.

5. Slowly remove the cap and add the remaining amount of gasoline.

Note: Do not mix gasoline and oil in the fuel tank. Oil at room temperature mixes easier and more thoroughly than cold oil. Oil below 32°F (0°C) requires additional mixing.

Filling the Fuel Tank

Fill the fuel tank with a fresh gasoline-and-oil mixture mixed at the proper ratio.

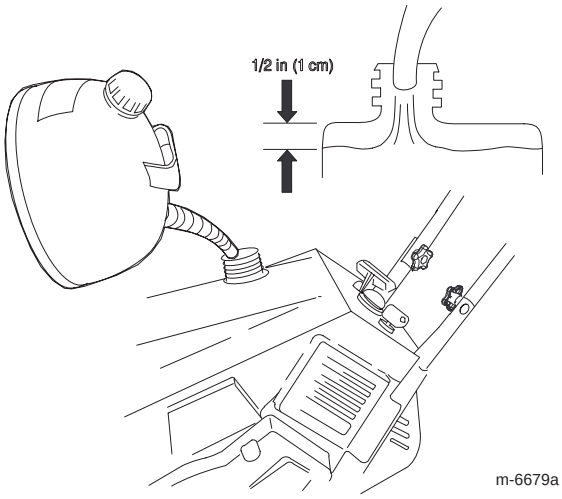

Operation

Note: Determine the left and right sides of the machine from the normal operating position.

Starting the Engine

1. Turn the ignition key clockwise to the **On** position.

2. Move the choke lever to the right.

3. Firmly push in the primer 2 times with your thumb, holding the primer in for a second before releasing it each time.

4. Start the engine by using either the electric start button or the recoil starter.

Using the recoil starter: Hold the snowthrower handle with one hand and pull the recoil starter vigorously with the other hand.

Using the electric starter:

A. Connect the power cord to the snowthrower and to a standard household power outlet and push the starter button.

Important: Run the electric starter no more than 10 times at intervals of 5 seconds on, then 5 seconds off. **Running the electric starter extensively can overheat and damage it.** If the engine does not start after this series of attempts, wait at least 40 minutes to allow the starter to cool before attempting to start it again. If the engine does not start after the second series of attempts, take the snowthrower to an Authorized Service Dealer for service.

B. When the engine starts, disconnect the power cord from the snowthrower and the outlet.

5. With the engine running, move the choke lever to the left slowly.

If you leave the snowthrower plugged into a power outlet, someone can inadvertently start the snowthrower and injure people or damage property.

Unplug the power cord whenever you are not starting the snowthrower.

Stopping the Engine

To stop the engine, turn the key counterclockwise to the **Off** position.

Starting the Rotor Blades

To start the rotor blades, hold the control bar against the handle.

Stopping the Rotor Blades

To stop the rotor blades, release the control bar.

Adjusting the Discharge Chute

To adjust the discharge chute, move the chute handle (A) and the chute deflector handle (B) as shown.

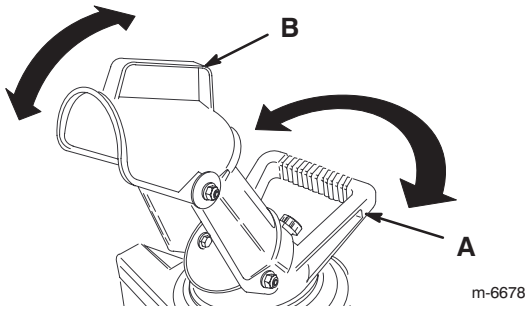

Throwing Snow

The rotor blades can throw stones, toys, and other foreign objects and cause serious personal injury to the operator or to bystanders.

- **Keep the area to be cleared free of all objects that the rotor blades could pick up and throw.**
- **Keep all children and pets away from the area of operation.**

Operating Tips

- Remove the snow as soon as possible after it falls.
- To self-propel, raise the handle and tilt the snowthrower **slightly** forward, lifting the wheels off the ground. The more you tilt the handle forward, the faster the snowthrower self-propels.
- If the snowthrower does not propel itself forward on slippery surfaces or in heavy snow, push forward on the handle, but allow the snowthrower to work at its own pace.
- Overlap each swath to ensure complete snow removal.
- Discharge the snow downwind whenever possible.
- In snowy and cold conditions, some controls and moving parts may freeze. **Do not use excessive force when trying to operate frozen controls.** If you have difficulty operating any control or part, start the engine and let it run for a few minutes.

Preventing Freeze-up after Use

- Let the engine run for a few minutes to prevent moving parts from freezing. Stop the engine, wait for all moving parts to stop, and remove ice and snow from the snowthrower.
- With the engine off, pull the recoil starter handle several times and push the electric start button once (if applicable) to prevent the recoil and electric starters from freezing up.

Maintenance

Note: Determine the left and right sides of the machine from the normal operating position.

Recommended Maintenance Schedule

Maintenance Service Interval	Maintenance Procedure
Initially	• Check for loose fasteners and tighten them if necessary. • Check the control cable and adjust it if necessary.[1]
Annually	• Check the control cable and adjust it if necessary. • Have an Authorized Service Dealer replace the rotor blades and the scraper if necessary. • Have an Authorized Service Dealer inspect the drive belt and replace it if necessary. • Store the snowthrower properly. • Check for loose fasteners and tighten them if necessary.
100 Hours	• Have an Authorized Service Dealer inspect the spark plug and replace it if necessary.

[1]Check the control cable after the first operating hour and adjust it if necessary.

Important: Refer to your engine operator's manual for additional maintenance procedures.

Adjusting the Control Cable

1. Stop the engine and wait for all moving parts to stop.

2. Move the control bar toward the handle to remove the slack in the control cable.

3. Ensure that there is a 1/16 to 1/8-inch (2 to 3 mm) gap between the control bar (A) and the handle (B). If you must adjust the control cable, go to step 4.

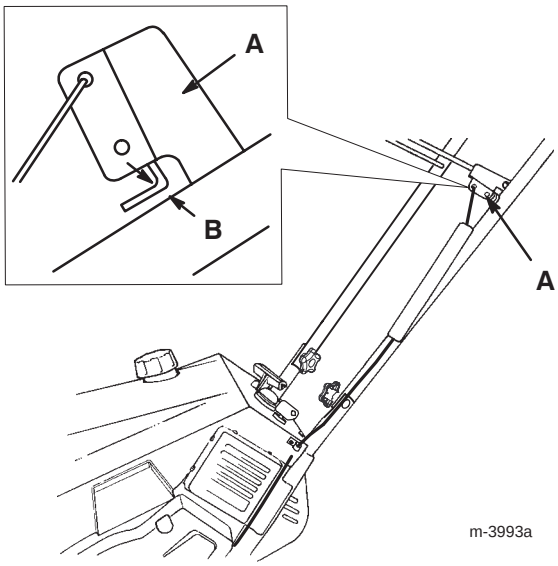

Important: The control cable must contain slack when you disengage the control bar.

4. Unhook the spring end from the top hole in the control bar bracket.

5. Slide the spring cover off the spring and the cable adjuster.

6. Unhook the Z-fitting (A) from the cable adjuster (B) and insert-it into the appropriate hole to obtain a 1/6 to 1/8 in. (2 to 3 mm) gap between the control bar bracket and the handle.

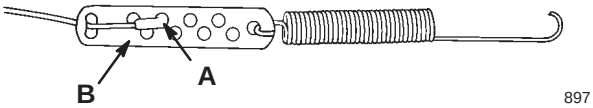

7. Install the spring cover over the cable aduster and spring.

8. Hook the spring into the top hole of the control bar bracket.

9. Check the gap and adjust it again if necessary.

Inspecting the Rotor Blades

Before each season, inspect the rotor blades for wear. When a rotor blade edge has worn down to the wear indicator hole (A), have an Authorized Service Dealer replace both rotor blades and the scraper.

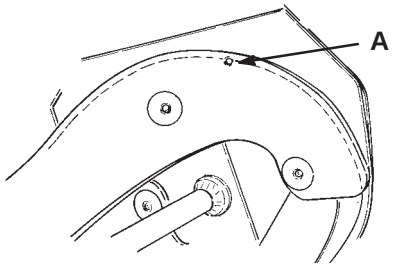

Inspecting the Scraper

Before each season, inspect the scraper for wear. If the thickness from the top of the wear indicator groove to the bottom of the scraper (A) is less than 1/16 inch (1.6 mm) or there is no longer a wear indicator groove, replace the scraper.

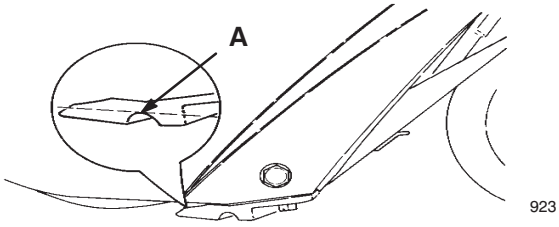

Storage

Important: Store the snowthrower in its operating position and on its wheels. Storing the snowthrower on its front housing may cause hard starting.

Storing the Snowthrower

Gasoline fumes are highly flammable, explosive, and dangerous if inhaled. If you store the product in an area with an open flame, the gasoline fumes may ignite and cause an explosion.

Do not store the snowthrower in a house (living area), basement, or any other area where ignition sources may be present, such as hot water and space heaters, clothes dryers, furnaces, and other like appliances.

1. Add a fuel stabilizer/conditioner to the fuel in the fuel tank as directed.

Note: If you use **Toro 50:1 2-Cycle Oil (Fuel Stabilizer Added)**, you do not need to add a fuel stabilizer/conditioner.

2. Run the engine for 5 minutes to distribute the conditioned fuel through the fuel system.

3. Stop the engine and allow it to cool.

4. Use a hand pump to pump the fuel from the fuel tank into an approved fuel container, or run the engine until it stops.

5. Start the engine and run it until it stops.

6. Choke or prime the engine, start it a third time, and run the engine until it will not start.

7. Slowly pull the recoil starter until you feel resistance due to compression pressure, then stop.

8. Release the starter tension gradually by allowing the rope to go back slowly to prevent the engine from reversing due to compression pressure.

9. Dispose of unused fuel properly. Recycle it according to local codes, or use it in your automobile.

Note: Do not store stabilized fuel for more than 90 days.

10. Tighten all loose screws, bolts, and locknuts. Repair or replace any damaged parts.

11. Clean the snowthrower thoroughly.

12. Cover the snowthrower and store it in a clean, dry place out of the reach of children. Allow the engine to cool before storing it in any enclosure.

Folding the Handle

1. Remove the locknut from the rear of the discharge chute.

2. Fold the discharge chute down and install the locknut tightly onto the bolt at the rear of the discharge chute handle.

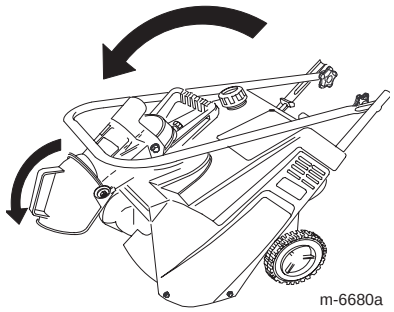

3. Loosen the knobs on the handle and fold the handle down over the snowthrower.

Note: You can carry the folded snowthrower by its discharge chute handle.


TORO®