Form No. 3470-669 Rev B

TORO®

Count on it.

# Parts Catalog

# 46cm

## Lawn Mower

**Model No. 20949—Serial No. 324000000 and Up**

Register at www.Toro.com.
Original Instructions (EN)

CE

*3470-669* B

# Ordering Replacement Parts

To order replacement parts, please supply the part number, the quantity, and the description of each part desired.

**Understanding Reference Numbers**

Each identified part in an illustration has a reference number. The reference number for a part also appears in the parts list, along with other information about the part.

This catalog uses two special reference number formats, one to indicate parts in a service assembly and another to indicate the quantity of a given part in an illustration.

**Service Assembly Reference Numbers**

Parts in service assemblies have reference numbers in the form a:b. The a represents the reference number of the entire service assembly and the b represents a sequential number unique to each part within the service assembly.

For example, a wheel assembly might be identified by reference number 6, the tire by 6:1, the valve by 6:2, and the wheel by 6:3. When you order the assembly identified by reference number 6, you receive all parts identified by reference numbers 6:1,6:2, and 6:3. However, you may also order any part individually. Reference numbers of this type appear in illustration and in parts lists.

**Reference Numbers Indicating Quantity**

In an illustration, if a reference number indicates more than one part, the reference number has the form nX y. The n represents the quantity of the part, the X is the multiplication symbol, and the y represents the reference number.

For example, in an illustration, the reference number 2X 37 means that two of the parts identified by reference number 37 are indicated.

# Contents

Deck and Bag Assembly . . . . . 4
Engine and Blade Assembly . . . . . 6
Suspension and Wheel Assembly . . . . . 8
Handle Assembly . . . . . 10
Shroud, Flywheel and Fuel Assembly . . . . . 12
Crankcase Assembly . . . . . 14
Carburetor, Muffler, Air Cleaner and Valve Cover Assembly . . . . . 16

**© 2025—The Toro® Company**
**8111 Lyndale Avenue South**
**Bloomington, MN 55420**



**Contact us at www.Toro.com.**
**Printed in the USA.**
**All Rights Reserved**

# Deck and Bag Assembly

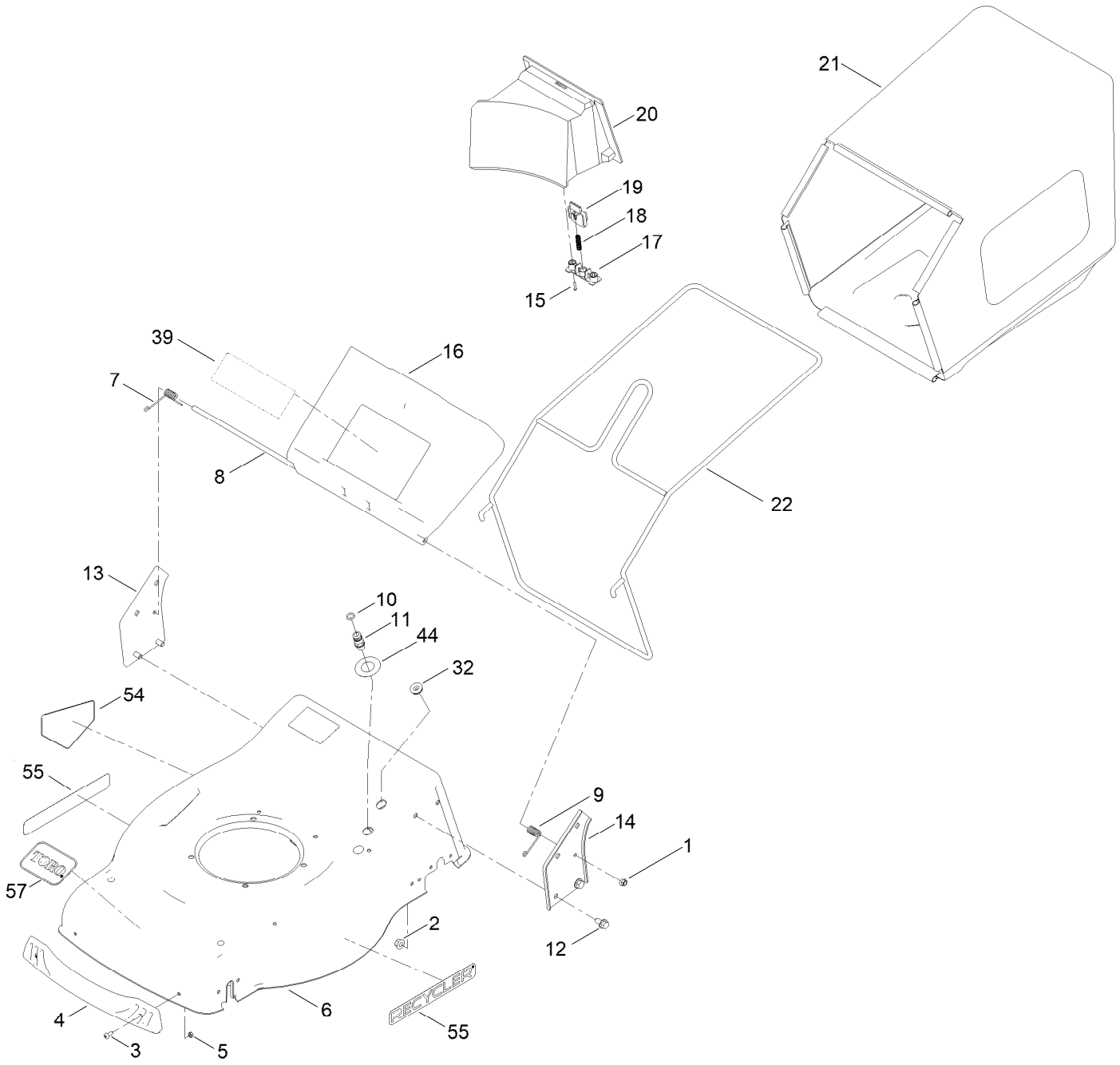

# Deck and Bag Assembly (continued)

| Ref. | Part Number | Qty. | Description |
|---|---|---|---|
| 1 | 134-0117 | 2 | Nut-Lock, Flange |
| 2 | 134-0118 | 4 | Nut-Lock, Flange |
| 3 | 134-0119 | 2 | Screw-Tooth |
| 4 | 134-0120 | 1 | Bumper-Front |
| 5 | 134-0121 | 2 | Nut-Lock |
| 6 | 134-0122 | 1 | Deck |
| 7 | 134-0123 | 1 | Spring-Twist, RH |
| 8 | 134-0124 | 1 | Rod-Spring, Rear Deflector |
| 9 | 134-0125 | 1 | Spring-Twist, LH |
| 10 | 134-0126 | 1 | O-Ring |
| 11 | 134-0127 | 1 | Port-Wash |
| 12 | 134-0128 | 4 | Bolt-HH, Flange |
| 13 | 134-0129 | 1 | Bracket-Handle, RH |
| 14 | 134-0130 | 1 | Bracket-Handle, LH |
| 15 | 134-0131 | 2 | Screw-Self Driving |
| 16 | 134-0132 | 1 | Deflector-Rear |
| 17 | 134-0133 | 1 | Pressing Board-Lock Button, Mulch |
| 18 | 134-0134 | 1 | Spring-Button, Mulch |
| 19 | 134-0135 | 1 | Lock-Button, Mulch |
| 20 | 134-0136 | 1 | Plug-Mulch |
| 21 | 162-0756 | 1 | Grass Bag Toro |
| 22 | 134-0138 | 1 | Frame-Bag, Grass |
| 32 | 134-0148 | 1 | Sheath-Cable, Protective |
| 39 | 134-0084 | 1 | Decal-Safety |
| 44 | 134-3615 | 1 | Decal-Port, Washout |
| 54 | 111-9826 | 1 | Decal-Danger |
| 55 | 140-4184 | 2 | Decal |
| 57 | 140-4183 | 1 | Decal |

# Engine and Blade Assembly

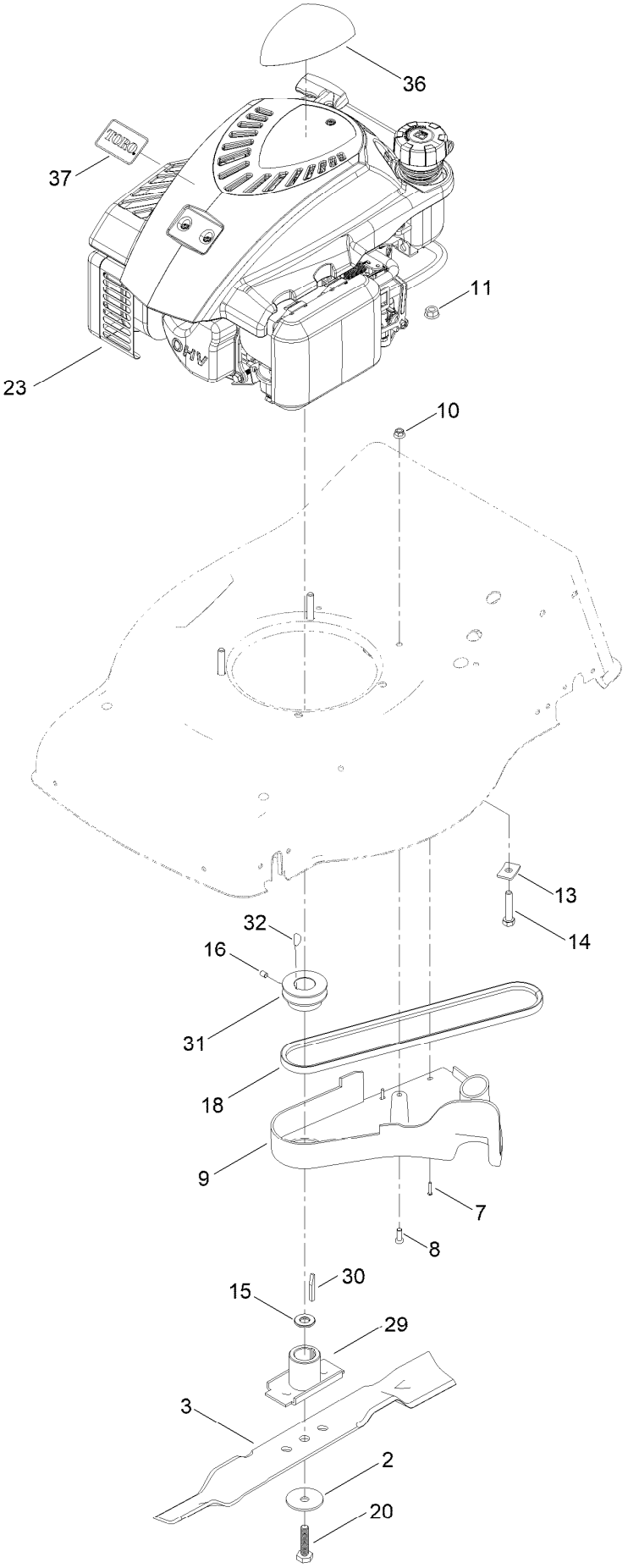

# Engine and Blade Assembly (continued)

| Ref. | Part Number | Qty. | Description |
|---|---|---|---|
| 2 | 134-2016 | 1 | Washer-Dished |
| 3 | 162-1117 | 1 | Blade - 46CM |
| 7 | 134-0155 | 2 | Screw-Self Driving |
| 8 | 134-0156 | 1 | Screw-Tooth |
| 9 | 134-0157 | 1 | Cover-Pulley, Belt |
| 10 | 134-0117 | 1 | Nut-Lock, Flange |
| 11 | 134-0118 | 3 | Nut-Lock, Flange |
| 13 | 134-0158 | 3 | Washer-Square |
| 14 | 134-2011 | 3 | Bolt-Blade |
| 15 | 134-0160 | 1 | Sheath-Blade |
| 16 | 134-0161 | 1 | Screw-Grub |
| 18 | 134-0163 | 1 | Belt-Triangle |
| 20 | 134-0164 | 1 | Bolt-Blade |
| 23 | 147-7103 | 1 | Engine-1P65Fc, Recoil |
| 29 | 134-0171 | 1 | Support-Blade |
| 30 | 134-0172 | 1 | Key-Flat |
| 31 | 134-0173 | 1 | Pulley-Drive |
| 32 | 134-0174 | 1 | Key-Woodruff |
| 36 | 162-0738 | 1 | Decal - Engine |
| 37 | 121-2396 | 1 | Decal |

# Suspension and Wheel Assembly

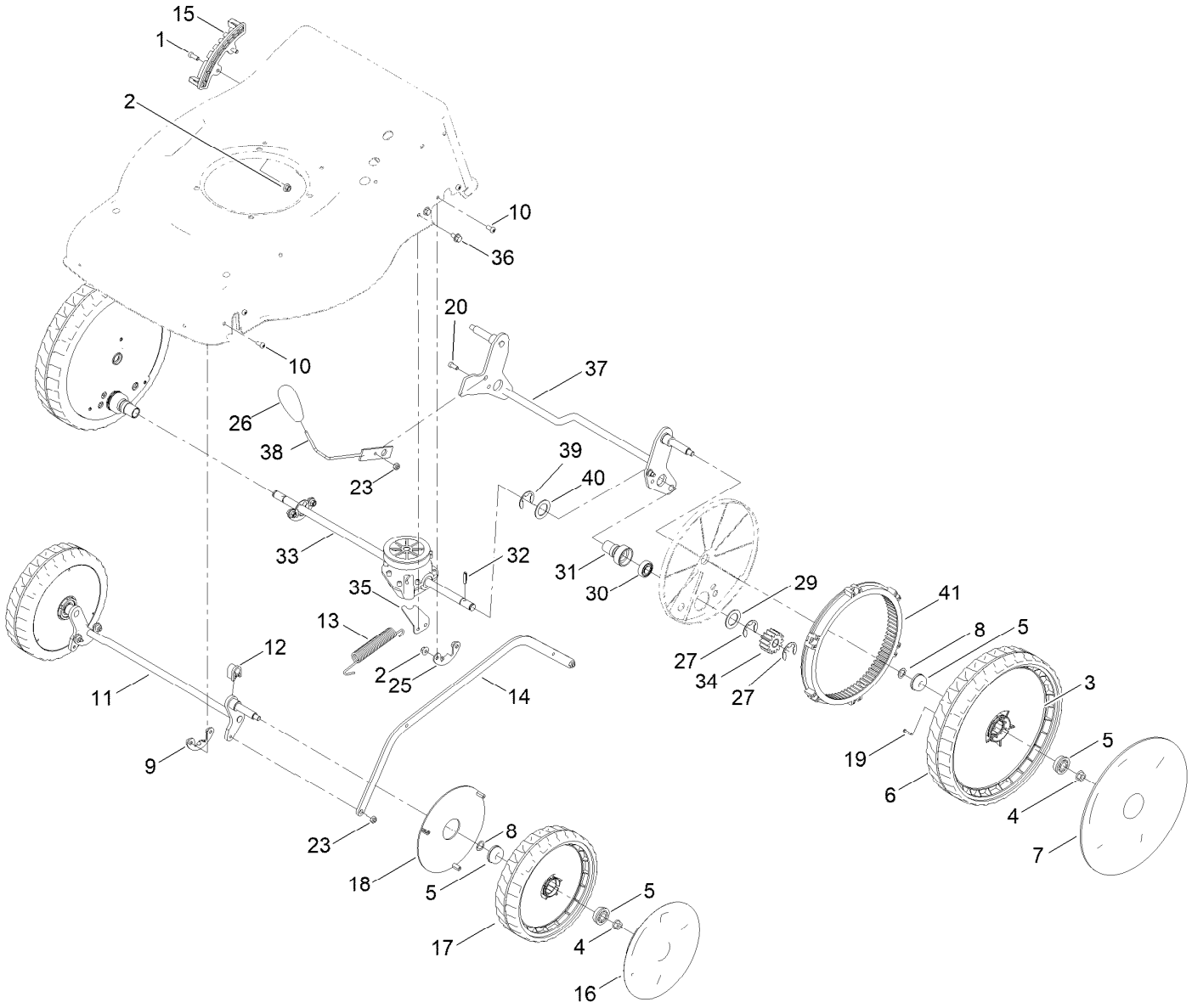

# Suspension and Wheel Assembly (continued)

| Ref. | Part Number | Qty. | Description |
|---|---|---|---|
| 1 | 134-0156 | 2 | Screw-Tooth |
| 2 | 134-0117 | 6 | Nut-Lock, Flange |
| 3 | 162-0755 | 2 | Cap-Hub 7" |
| 4 | 134-0118 | 4 | Nut-Lock, Flange |
| 5 | 134-0176 | 8 | Bearing |
| 6 | 134-8650 | 2 | Wheel ASM |
| 7 | 134-0178 | 2 | Cover-Wheel, Dustproof |
| 8 | 134-0179 | 4 | Washer-Wave |
| 9 | 134-0180 | 2 | Clamp-Axle, Fixed |
| 10 | 134-0181 | 8 | Screw-Tooth |
| 11 | 134-0182 | 1 | Front Wheel Axis ASM |
| 12 | 134-0183 | 2 | Ring-Fixed |
| 13 | 134-0184 | 1 | Spring-Tension |
| 14 | 134-0185 | 1 | Bracket-Connecting, HOC |
| 15 | 134-0186 | 1 | Board-Adjuster, HOC |
| 16 | 162-0754 | 2 | Cap-Hub 8" |
| 17 | 134-0188 | 2 | Wheel ASM (8) |
| 18 | 134-0212 | 2 | Cover-Wheel, Dustproof |
| 19 | 134-0131 | 6 | Screw-Self Driving |
| 20 | 134-0189 | 1 | Screw-Pan, Cross |
| 23 | 134-0190 | 3 | Nut-Lock |
| 25 | 134-0191 | 2 | Ring-Fixed |
| 26 | 134-0192 | 1 | Handle-Lever, HOC |
| 27 | 134-0197 | 4 | Washer-Spring |
| 28 | 134-0198 | 1 | Gear Output ASM-RH ● |
| 29 | 134-0199 | 2 | Washer-Flat |
| 30 | 134-0200 | 2 | Bearing |
| 31 | 134-0201 | 2 | Sheath-Bearing |
| 32 | 134-0202 | 2 | Pin-Cynlindrical |
| 33 | 134-0203 | 1 | Gearbox |
| 34 | 134-0204 | 1 | Gear Output ASM-LH |
| 35 | 134-0205 | 1 | Bracket-Location |
| 36 | 134-0206 | 2 | Bolt-HH, Flange |
| 37 | 134-0207 | 1 | Rear Axle Shaft ASM |
| 38 | 134-0208 | 1 | Handle ASM |
| 39 | 134-0209 | 2 | Washer-Spring |
| 40 | 134-0210 | 1 | Washer |
| 41 | 134-0211 | 2 | Gear Ring |

● Not illustrated

# Handle Assembly

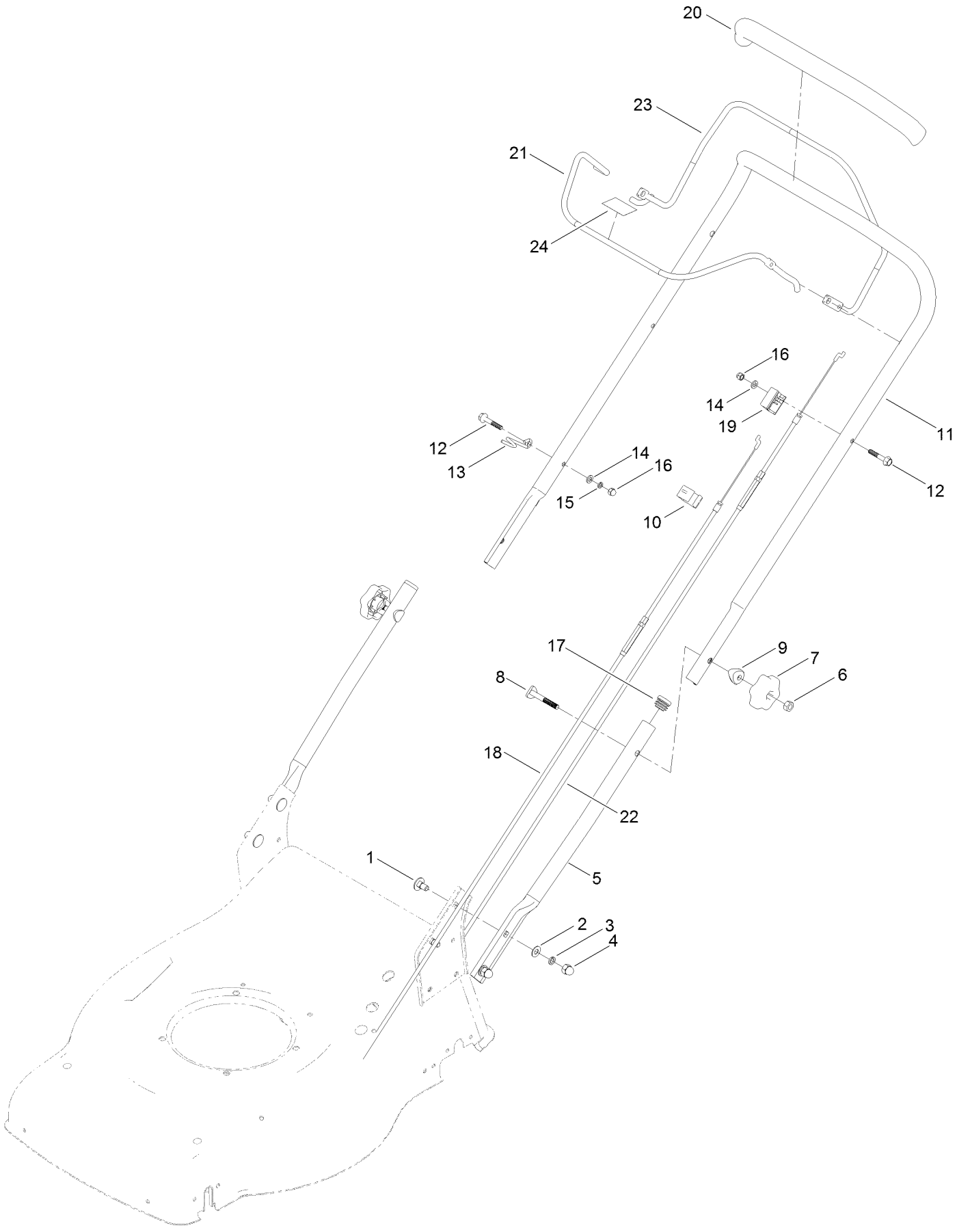

# Handle Assembly (continued)

| Ref. | Part Number | Qty. | Description |
|---|---|---|---|
| 1 | 134-0219 | 4 | Bolt |
| 2 | 09475 | 4 | Washer |
| 3 | 03469 | 4 | Washer-Spring |
| 4 | 134-0222 | 4 | Nut-Lid |
| 5 | 134-0223 | 2 | Handlebar-Lower |
| 6 | 134-0224 | 2 | Nut-Hex |
| 7 | 134-0225 | 2 | Knob-Rotary |
| 8 | 134-0226 | 2 | Bolt-Flat Head |
| 9 | 134-0227 | 2 | Washer-Curve |
| 10 | 134-0228 | 1 | Cable Clamp |
| 11 | 134-0229 | 1 | Handlebar-Upper |
| 12 | 134-0230 | 2 | Bolt-HH, Flange |
| 13 | 134-0231 | 1 | Hook-Cable |
| 14 | 09472 | 2 | Washer-Plain |
| 15 | 09474 | 1 | Washer-Spring |
| 16 | 134-0234 | 2 | Nut-Lid |
| 17 | 134-0235 | 2 | Plug-Tube |
| 18 | 134-0236 | 1 | Cable-Brake, Engine |
| 19 | 134-0237 | 1 | Cable-Block, Fixed |
| 20 | 134-0238 | 1 | Grip-Handle |
| 21 | 134-0239 | 1 | Lever-Engine |
| 22 | 134-0240 | 1 | Cable-Clutch |
| 23 | 134-0241 | 1 | Lever-Clutch, Gearbox |
| 24 | H295159 | 1 | Decal-Stop |

# Shroud, Flywheel and Fuel Assembly

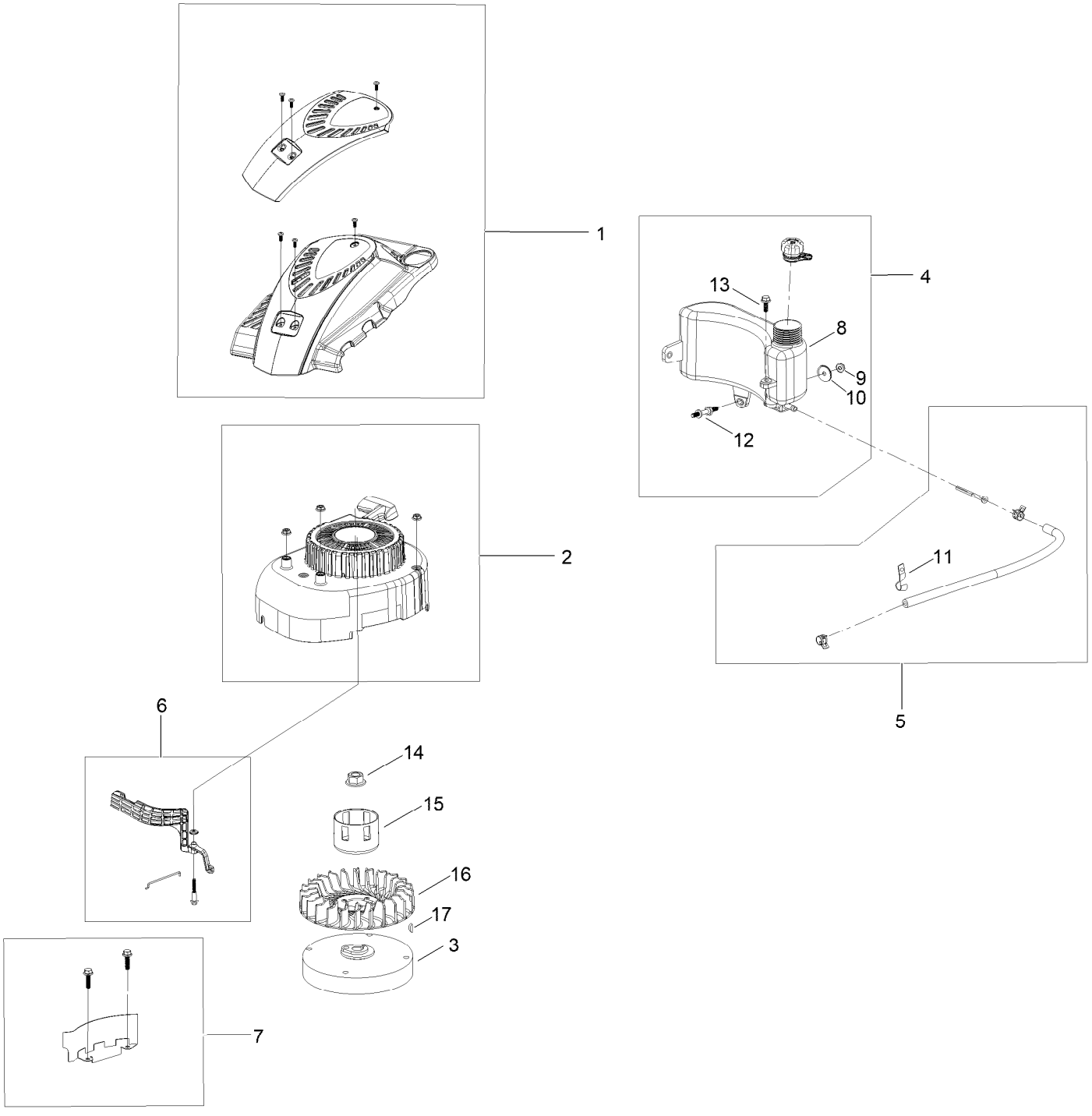

# Shroud, Flywheel and Fuel Assembly (continued)

| Ref. | Part Number | Qty. | Description |
|---|---|---|---|
| 1 | 119-1990 | 1 | Shroud ASM |
| 2 | 121-4160 | 1 | Recoil And Blower Shroud Kit |
| 3 | 147-7106 | 1 | Flywheel |
| 4 | 144-1019 | 1 | Cap-Fuel |
| 5 | 121-4167 | 1 | Fuel Line Kit |
| 6 | 121-4168 | 1 | Air Vane Kit |
| 7 | 119-1994 | 1 | Flywheel Shield Kit |
| 8 | 121-4164 | 1 | Tank-Fuel |
| 9 | 121-0010 | 1 | Nut-Flange |
| 10 | 121-0203 | 1 | Washer-Flat |
| 11 | 121-0017 | 1 | Clip-Harness, Wire |
| 12 | 121-0016 | 1 | Bolt-Stud |
| 13 | 121-0007 | 1 | Bolt-Flange |
| 14 | 121-0047 | 1 | Nut-Flange |
| 15 | 121-0035 | 1 | Cup-Starter |
| 16 | 120-4480 | 1 | Fan |
| 17 | 120-4320 | 1 | Key-Woodruff |

# Crankcase Assembly

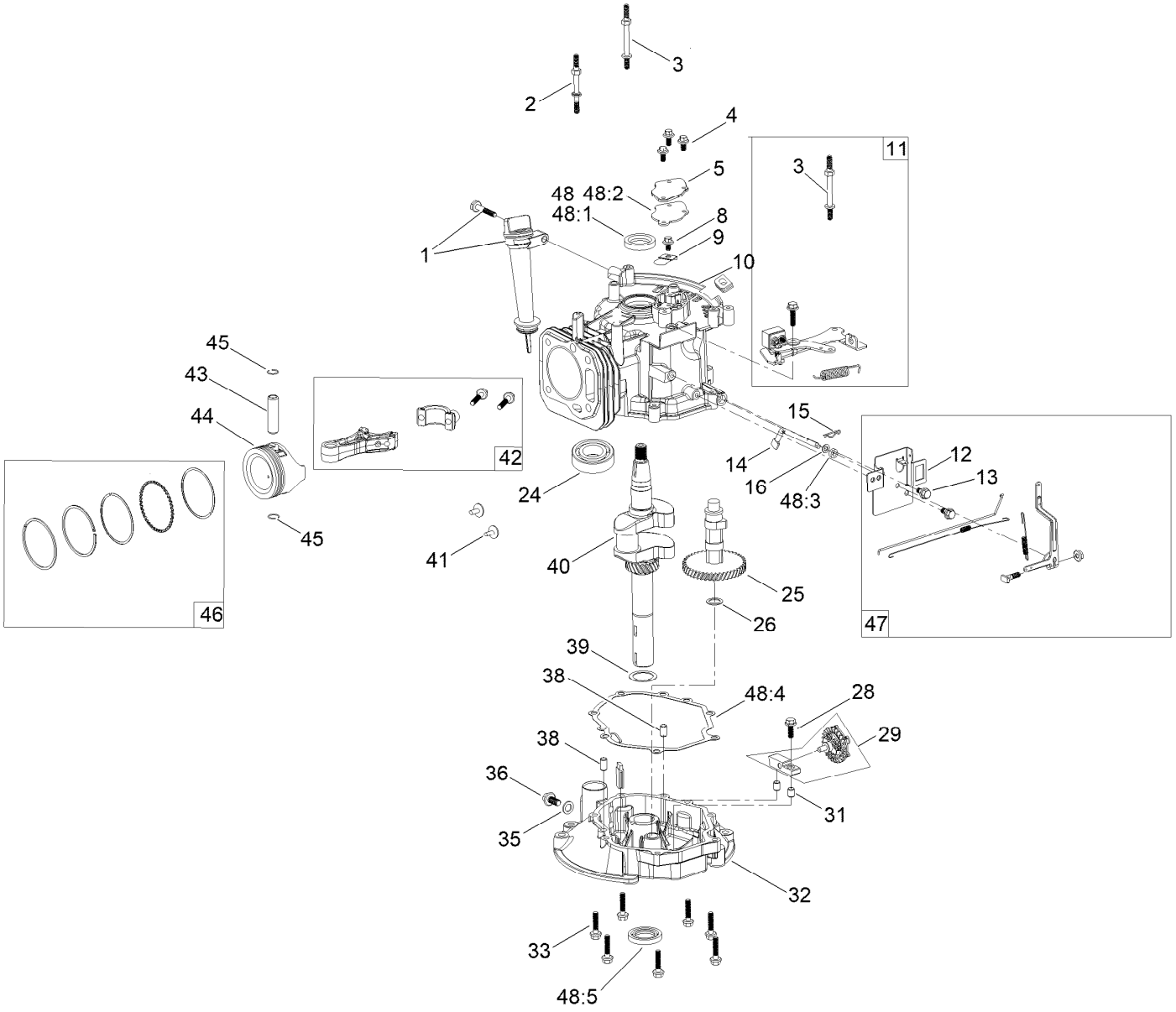

# Crankcase Assembly (continued)

| Ref. | Part Number | Qty. | Description |
|---|---|---|---|
| 1 | 121-4279 | 1 | Dipstick And Fill Tube Kit |
| 2 | 121-0058 | 1 | Bolt-Stud |
| 3 | 121-0059 | 2 | Bolt-Stud |
| 4 | 121-0044 | 3 | Screw-HHF |
| 5 | 121-0032 | 1 | Cover-Pump, Oil |
| 8 | 121-0041 | 1 | Bolt-Flange |
| 9 | 120-4263 | 1 | Valve-Reed |
| 10 | 121-0371 | 1 | Crankcase |
| 11 | 119-1991 | 1 | Brake ASM Recoil Kit |
| 12 | 121-0026 | 1 | Control ASM |
| 13 | 120-4216 | 2 | Screw-HHF |
| 14 | 136-7865 | 1 | Arm-Governor |
| 15 | 120-4256 | 1 | Pin-Hair |
| 16 | 136-7866 | 1 | Washer-Flat |
| 24 | 121-0056 | 1 | Bearing-Ball |
| 25 | 121-4174 | 1 | Camshaft ASM |
| 26 | 121-0051 | 1 | Washer-Flat |
| 28 | 121-0007 | 1 | Bolt-Flange |
| 29 | 136-7903 | 1 | Governor Gear ASM |
| 31 | 121-0055 | 2 | Pin-Dowel |
| 32 | 121-0031 | 1 | Cover-Crankcase |
| 33 | 121-0040 | 7 | Bolt-Flange |
| 35 | 121-0048 | 1 | Washer-Plain |
| 36 | 121-0030 | 1 | Screw-HHF |
| 38 | 121-0054 | 2 | Pin-Dowel |
| 39 | 136-7863 | 1 | Washer-Flat |
| 40 | 147-7105 | 1 | Crankshaft ASM |
| 41 | 120-4477 | 2 | Tappet-Valve |
| 42 | 120-4469 | 1 | Connecting Rod ASM |
| 43 | 120-4467 | 1 | Pin-Piston |
| 44 | 121-4173 | 1 | Piston |
| 45 | 121-0052 | 2 | Clip-Pin, Wrist |
| 46 | 121-4171 | 1 | Piston Ring Set |
| 47 | 119-1968 | 1 | Governor Arm Kit |
| 48 | 127-9144 | 1 | Seal And Gasket Kit |
| 48:1 | 121-0019 | 1 | Seal-Oil |
| 48:2 | 121-0020 | 1 | Gasket-Breather |
| 48:3 | 121-0021 | 1 | Seal-Oil |
| 48:4 | 120-4459 | 1 | Gasket-Cover, Case |
| 48:5 | 121-0022 | 1 | Seal-Oil |

# Carburetor, Muffler, Air Cleaner and Valve Cover Assembly

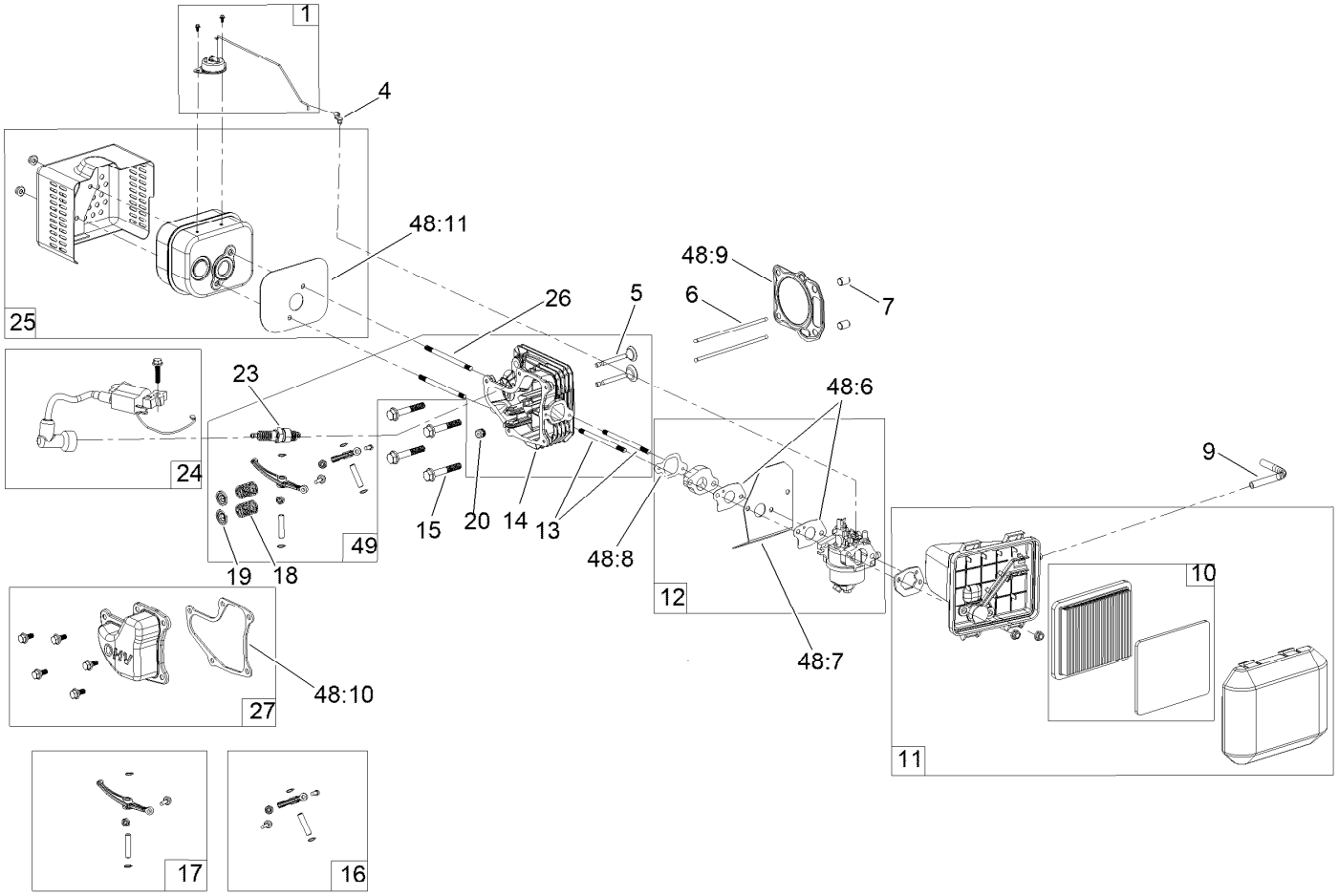

# Carburetor, Muffler, Air Cleaner and Valve Cover Assembly (continued)

| Ref. | Part Number | Qty. | Description |
|---|---|---|---|
| 1 | 121-4175 | 1 | Thermal Control Kit |
| 4 | 120-4451 | 1 | Lock-Throttle |
| 5 | 121-4192 | 1 | Valve Set |
| 6 | 121-4193 | 2 | Rod-Push |
| 7 | 121-0053 | 2 | Pin-Dowel |
| 9 | 119-1902 | 1 | Tube-Breather |
| 10 | 119-1909 | 1 | Air Filter And Prefilter Kit |
| 11 | 121-4177 | 1 | Air Cleaner ASM Kit |
| 12 | 136-7907 | 1 | Carb Replacement Kit |
| 13 | 121-0367 | 2 | Stud-Intake |
| 14 | 121-4194 | 1 | Head-Cylinder |
| 15 | 121-0043 | 4 | Bolt-Flange |
| 16 | 136-7869 | 1 | Intake Rocker Arm ASM |
| 17 | 136-7868 | 1 | Exhaust Rocker Arm ASM |
| 18 | 120-4473 | 2 | Spring-Valve |
| 19 | 120-4474 | 2 | Retainer-Valve, Spring |
| 20 | 121-4202 | 1 | Seal-Stem, Valve |
| 23 | 121-4199 | 1 | Spark Plug |
| 24 | 136-7912 | 1 | Ignition ASM |
| 25 | 121-4277 | 1 | Muffler And Shield Kit |
| 26 | 121-0045 | 2 | Stud-Exhaust |
| 27 | 121-4188 | 1 | Valve Cover Kit |
| 48 | 127-9144 | 1 | Seal And Gasket Kit ● |
| 48:6 | 121-4184 | 2 | Gasket-Carburetor |
| 48:7 | 120-4446 | 1 | Insulator-Carburetor |
| 48:8 | 121-4183 | 1 | Gasket-Intake |
| 48:9 | 121-4197 | 1 | Gasket-Head |
| 48:10 | 121-4190 | 1 | Gasket-Valve Cover |
| 48:11 | 121-0034 | 1 | Gasket-Exhaust |
| 49 | 136-7915 | 1 | Complete Head ASM ● |
| 50 | 127-9146 | 1 | Internal Carb Kit With Gaskets ● |
| 99 | 121-4242 | 1 | High Altitude Kit ● |

● Not illustrated

## Notes:

## Notes:




**Count on it.**