Form No. 3350–346

Greensmaster® 3250-D

Traction Unit

Model No. 04383—230000601 and Up

Operator's Manual

English (EN, GB)

Warning

CALIFORNIA

Proposition 65 Warning

Diesel engine exhaust and some of its constituents are known to the State of California to cause cancer, birth defects, and other reproductive harm.

Important The engine in this product is not equipped with a spark arrester muffler. It is a violation of California Public Resource Code Section 4442 to use or operate this engine on any forest-covered, brush-covered, or grass-covered land as defined in CPRC 4126. Other states or federal areas may have similar laws.

This spark ignition system complies with Canadian ICES-002.

Ce système d'allumage par étincelle de véhicule est conforme à la norme NMB-002 du Canada.

Contents

	Page
Introduction	3
Safety	3
Safe Operating Practices	3
Toro Riding Mower Safety	5
Sound Pressure Level	7
Sound Power Level	7
Vibration Level	7
Safety and Instruction Decals	7
Specifications	10
General Specifications	10
Optional Equipment	10
Setup	10
Loose Parts	10
Installing the Front Wheels	11
Installing the Rear Wheel	11
Mounting the Seat	12
Charging the Battery	12
Installing the Steering Wheel	13
Installing Breather Extension and Reservoir Cap	13
Mounting the Front Rollers	13
Adjusting Carrier Frame Rollers	14
Installing the Cutting Units	14
Adjusting the Transport Height	16
Before Operating	17
Checking the Engine Oil	17
Filling the Fuel Tank	17
Checking the Cooling System	18
Servicing the Hydraulic System Fluid	18
Draining Water from Fuel Filter/Water Separator	20
Checking the Tire Pressure	20
Checking the Reel-to-Bedknife Contact	20
Checking the Torque of the Wheel Nuts	20
Operation	20
Think Safety First	20
Controls	20
Break-In Period	22
Starting and Stopping the Machine	23
Bleeding the Fuel System	23
Testing the Safety Interlock System	23
Preparing the Machine for Mowing	24
Training Period	24
Before Mowing	24
Mowing Procedures	25
Transport Operation	25
Inspection and Clean-Up After Mowing	26
Towing the Traction Unit	26
Maintenance	26
Recommended Maintenance Schedule	26
Daily Maintenance Checklist	28
Lubrication	29
Air Cleaner	30
Cleaning the Radiator Screen	30
Engine Oil	31
Fuel Filter/Water Separator	31
Adjusting the Throttle Control	31
Adjusting the Idle Speed	31
Hydraulic Oil	32
Checking the Hydraulic Lines and Hoses	32
Adjusting the Brakes	32
Adjusting the Transmission for Neutral	33
Adjusting the Transport Speed	33
Adjusting the Mowing Speed	34
Adjusting the Cutting Unit Lift/Drop	34
Adjusting the Belt	35
Servicing the Battery	35
Storing the Battery	36
Fuses	36
Electrical Schematic	37
Hydraulic Schematic	38
The Toro General Commercial Products Warranty	40

© 2003 by The Toro Company

8111 Lyndale Avenue South
Bloomington, MN 55420-1196

All Rights Reserved
Printed in the USA

Introduction

Read this manual carefully to learn how to operate and maintain your product properly. The information in this manual can help you and others avoid injury and product damage. Although Toro designs and produces safe products, you are responsible for operating the product properly and safely.

Whenever you need service, genuine Toro parts, or additional information, contact an Authorized Service Dealer or Toro Customer Service and have the model and serial numbers of your product ready. Figure 1 illustrates the location of the model and serial numbers on the product.

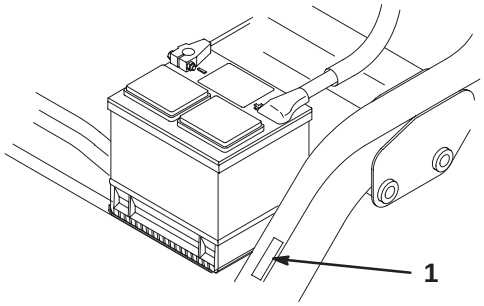

Figure 1

1. Location of the model and serial numbers

Write the product model and serial numbers in the space below:

Model No. _____

Serial No. _____

This manual identifies potential hazards and has special safety messages that help you and others avoid personal injury and even death. ***Danger***, ***Warning***, and ***Caution*** are signal words used to identify the level of hazard. However, regardless of the hazard, be extremely careful.

Danger signals an extreme hazard that *will* cause serious injury or death if you do not follow the recommended precautions.

Warning signals a hazard that *may* cause serious injury or death if you do not follow the recommended precautions.

Caution signals a hazard that may cause minor or moderate injury if you do not follow the recommended precautions.

This manual uses two other words to highlight information. **Important** calls attention to special mechanical information and **Note:** emphasizes general information worthy of special attention.

Safety

This machine meets or exceeds CEN standard EN 836:1997, ISO standard 5395:1990, and ANSI B71.4-1999 specifications in effect at the time of production when 40 lb. of ballast is added to the rear wheel.

Improper use or maintenance by the operator or owner can result in injury. To reduce the potential for injury, comply with these safety instructions and always pay attention to the safety alert ⚠ symbol, which means CAUTION, WARNING, or DANGER—"personal safety instruction." Failure to comply with the instruction may result in personal injury or death.

Safe Operating Practices

The following instructions are from the CEN standard EN 836:1997, ISO standard 5395:1990, and ANSI B71.4-1999.

Training

- Read the Operator's Manual and other training material carefully. Be familiar with the controls, safety signs, and the proper use of the equipment.
- Never allow children or people unfamiliar with these instructions to use or service the mower. Local regulations may restrict the age of the operator.
- Never mow while people, especially children, or pets are nearby.
- Keep in mind that the operator or user is responsible for accidents or hazards occurring to other people or their property.
- Do not carry passengers.
- All drivers and mechanics should seek and obtain professional and practical instruction. The owner is responsible for training the users. Such instruction should emphasize:
  - the need for care and concentration when working with ride-on machines;
  - control of a ride-on machine sliding on a slope will not be regained by the application of the brake. The main reasons for loss of control are:
    - insufficient wheel grip;
    - being driven too fast;
    - inadequate braking;
    - the type of machine is unsuitable for its task;
    - lack of awareness of the effect of ground conditions, especially slopes;
    - incorrect hitching and load distribution.

- The owner/user can prevent and is responsible for accidents or injuries occurring to himself or herself, other people, or property.

Preparation

- While mowing, always wear substantial footwear, long trousers, hard hat, safety glasses, and ear protection. Long hair, loose clothing, or jewelry may get tangled in moving parts. Do not operate the equipment when barefoot or wearing open sandals.
- Thoroughly inspect the area where the equipment is to be used and remove all objects which may be thrown by the machine.
- **Warning**—Fuel is highly flammable. Take the following precautions:
  - Store fuel in containers specifically designed for this purpose.
  - Refuel outdoors only and do not smoke while refuelling.
  - Add fuel before starting the engine. Never remove the cap of the fuel tank or add fuel while the engine is running or when the engine is hot.
  - If fuel is spilled, do not attempt to start the engine but move the machine away from the area of spillage and avoid creating any source of ignition until fuel vapors have dissipated.
  - Replace all fuel tanks and container caps securely.
- Replace faulty silencers.
- Evaluate the terrain to determine what accessories and attachments are needed to properly and safely perform the job. Only use accessories and attachments approved by the manufacturer.
- Check that operator's presence controls, safety switches and shields are attached and functioning properly. Do not operate unless they are functioning properly.

Operation

- Do not operate the engine in a confined space where dangerous carbon monoxide fumes can collect.
- Mow only in daylight or in good artificial light.
- Before attempting to start the engine, disengage all blade attachment clutches, shift into neutral, and engage the parking brake.
- Remember there is no such thing as a safe slope. Travel on grass slopes requires particular care. To guard against overturning:
  - do not stop or start suddenly when going up or downhill;
  - machine speeds should be kept low on slopes and during tight turns;
  - stay alert for humps and hollows and other hidden hazards;
  - never mow across the face of the slope, unless the mower is designed for this purpose.
- Stay alert for holes in the terrain and other hidden hazards.
- Watch out for traffic when crossing or near roadways.
- Stop the blades rotating before crossing surfaces other than grass.
- When using any attachments, never direct discharge of material toward bystanders nor allow anyone near the machine while in operation.
- Never operate the machine with damaged guards, shields, or without safety protective devices in place. Be sure all interlocks are attached, adjusted properly, and functioning properly.
- Do not change the engine governor settings or overspeed the engine. Operating the engine at excessive speed may increase the hazard of personal injury.
- Before leaving the operator's position:
  - stop on level ground;
  - disengage the power take-off and lower the attachments;
  - change into neutral and set the parking brake;
  - stop the engine and remove the key.
- Disengage drive to attachments when transporting or not in use.
- Stop the engine and disengage drive to attachment
  - before refuelling;
  - before removing the grass catcher/catchers;
  - before making height adjustment unless adjustment can be made from the operator's position.
  - before clearing blockages;
  - before checking, cleaning or working on the mower;
  - after striking a foreign object or if an abnormal vibration occurs. Inspect the mower for damage and make repairs before restarting and operating the equipment.
- Reduce the throttle setting before stopping engine and, if the engine is provided with a shut-off valve, turn the fuel off at the conclusion of mowing.
- Keep hands and feet away from the cutting units.

- Look behind and down before backing up to be sure of a clear path.
- Slow down and use caution when making turns and crossing roads and sidewalks. Stop reels if not mowing.
- Do not operate the mower under the influence of alcohol or drugs
- Use care when loading or unloading the machine into a trailer or truck
- Use care when approaching blind corners, shrubs, trees, or other objects that may obscure vision.

Maintenance and Storage

- Keep all nuts, bolts and screws tight to be sure the equipment is in safe working condition.
- Never store the equipment with fuel in the tank inside a building where fumes may reach an open flame or spark.
- Allow the engine to cool before storing in any enclosure.
- To reduce the fire hazard, keep the engine, silencer, battery compartment and fuel storage area free of grass, leaves, or excessive grease.
- Check the grass catcher frequently for wear or deterioration.
- Keep all parts in good working condition and all hardware and hydraulic fittings tightened. Replace all worn or damaged parts and decals.
- If the fuel tank has to be drained, do this outdoors.
- Be careful during adjustment of the machine to prevent entrapment of the fingers between moving blades and fixed parts of the machine.
- On multi-reel machines, take care as rotating one reel can cause other reels to rotate.
- Disengage drives, lower the cutting units, set parking brake, stop engine and remove key and disconnect spark plug wire. Wait for all movement to stop before adjusting, cleaning or repairing.
- Clean grass and debris from cutting units, drives, mufflers, and engine to help prevent fires. Clean up oil or fuel spillage.
- Use jack stands to support components when required.
- Carefully release pressure from components with stored energy.
- Disconnect battery and remove spark plug wire before making any repairs. Disconnect the negative terminal first and the positive last. Reconnect positive first and negative last.
- Use care when checking the reels. Wear gloves and use caution when servicing them.
- Keep hands and feet away from moving parts. If possible, do not make adjustments with the engine running.
- Charge batteries in an open well ventilated area, away from spark and flames. Unplug charger before connecting or disconnecting from battery. Wear protective clothing and use insulated tools.

Toro Riding Mower Safety

The following list contains safety information specific to Toro products or other safety information that you must know that is not included in the CEN, ISO, or ANSI standard.

This product is capable of amputating hands and feet and throwing objects. Always follow all safety instructions to avoid serious injury or death.

Use of this product for purposes other than its intended use could prove dangerous to user and bystanders.

- Know how to stop the engine quickly.
- Do not operate the machine while wearing tennis shoes or sneakers.
- Wearing safety shoes and long pants is advisable and required by some local ordinances and insurance regulations.
- The operator must be skilled and trained in how to drive on hillsides. Failure to use caution on slopes or hills may cause loss of control and cause the vehicle to top or roll, possibly resulting in personal injury or death.
- Handle gasoline carefully. Wipe up any spills.
- Check the safety interlock switches daily for proper operation. If a switch should fail, replace the switch before operating the machine. After every two years, replace all four interlock switches in the safety system, **regardless** if they are working properly or not.
- Before starting the engine, sit on the seat, depress the lift pedal, and release it to ensure that the cutting units are disengaged. Verify that the traction system is in neutral and the parking brake is set.
- Using the machine demands attention. To prevent loss of control:
  - Do not drive close to sand traps, ditches, creeks, or other hazards.
  - Reduce speed when making sharp turns. Avoid sudden stops and starts.
  - When near or crossing roads, always yield the right-of-way.

– Apply the service brakes when going downhill to keep forward speed slow and to maintain control of the machine.

- The grass baskets must be in place during operation of the reels or thatchers for maximum safety. Shut the engine off before emptying the baskets.
- Raise the cutting units when driving from one work area to another.
- Do not touch the engine, muffler, or exhaust pipe while the engine is running or soon after it has stopped because these areas could be hot enough to cause burns.
- Stay clear of the rotating screen at the side of the engine to prevent direct contact with your body or clothing.
- If the engine stalls or loses headway and cannot make it to the top of a slope, do not turn the machine around. Always back slowly, straight down the slope.
- When a person or pet appears unexpectedly in or near the mowing area, **stop mowing.** Careless operation, combined with terrain angles, ricochets, or improperly positioned guards can lead to thrown object injuries. Do not resume mowing until the area is cleared.
- Before getting off of the seat, move the functional control lever to neutral (N), raise the cutting units and wait for the reels to stop spinning. Set the parking brake. Stop the engine and remove the key from the ignition switch.
- Whenever the machine is left unattended, make sure that the cutting units are fully raised and the reels are not spinning, the key is removed from the ignition switch, and the parking brake is set.

Maintenance and Storage

- Make sure all hydraulic line connectors are tight and all hydraulic hoses and lines are in good condition before applying pressure to the system.
- Keep your body and hands away from pin hole leaks or nozzles that eject hydraulic fluid under high pressure. Use paper or cardboard, not your hands, to search for leaks. Hydraulic fluid escaping under pressure can have sufficient force to penetrate the skin and cause serious injury.
- Before disconnecting or performing any work on the hydraulic system, all pressure in the system must be relieved by stopping the engine and lowering the cutting units and attachments to the ground.
- Check all fuel lines for tightness and wear on a regular basis. Tighten or repair them as needed.
- If the engine must be running to perform a maintenance adjustment, keep hands, feet, clothing, and any parts of the body away from the cutting units, attachments, and any moving parts, especially the screen at the side of the engine. Keep everyone away.
- The engine must be shut off before checking the oil or adding oil to the crankcase.
- To ensure safety and accuracy, have an Authorized Toro Distributor check the maximum engine speed with a tachometer. Maximum governed engine speed should be 2900 RPM.
- If major repairs are ever needed or if assistance is desired, contact an Authorized Toro Distributor.
- Use only Toro-approved attachments and replacement parts. The warranty may be voided if used with unapproved attachments.

Sound Pressure Level

This unit has an equivalent continuous A-weighted sound pressure at the operator ear of: 84 dBA, based on measurements of identical machines per Directive 98/37/EC and amendments.

Sound Power Level

This unit has a guaranteed sound power level of: 105 dBA, based on measurements of identical machines per Directive 200/14/EC and amendments.

Vibration Level

Hand-Arm

This unit does not exceed a vibration level of 2.5 m/s^2 at the hands based on measurements of identical machines per ISO 5349 procedures.

Whole Body

This unit does not exceed a vibration level of 0.5 m/s^2 at the posterior based on measurements of identical machines per ISO 2631 procedures.

Safety and Instruction Decals

Safety decals and instructions are easily visible to the operator and are located near any area of potential danger. Replace any decal that is damaged or lost.

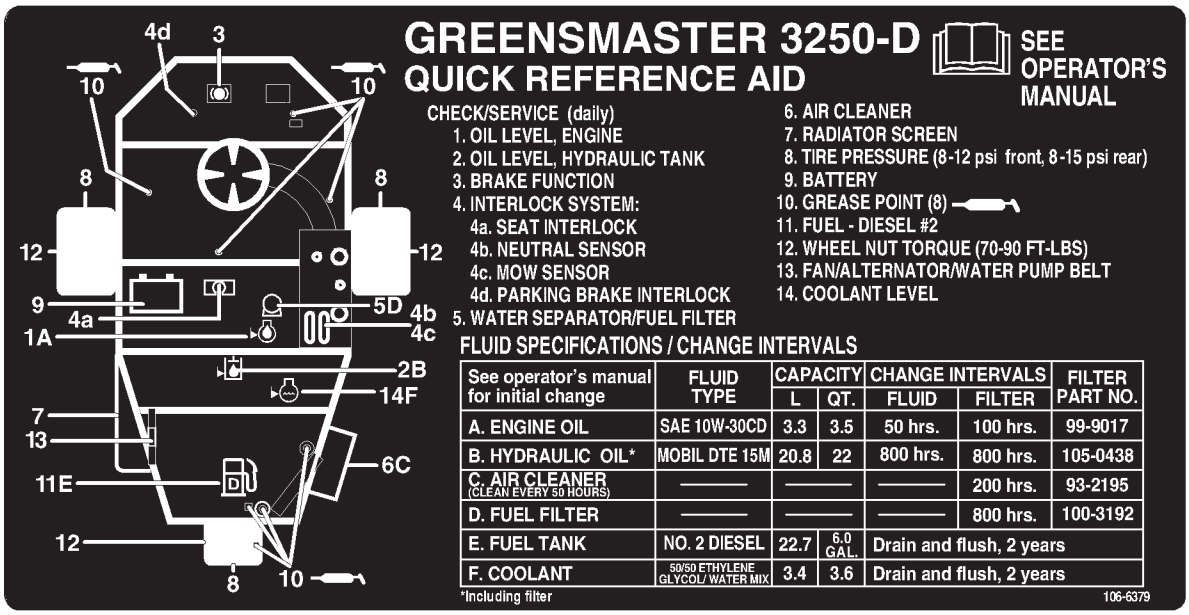

106-6379

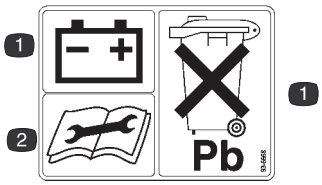

93-6668

1. The battery contains lead. Do not dispose of in the garbage.
2. Read the operator's manual before performing any maintenance.

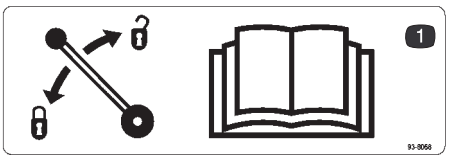

93-8068

1. Read the operator's manual for instructions on how to lock and unlock the steering arm.

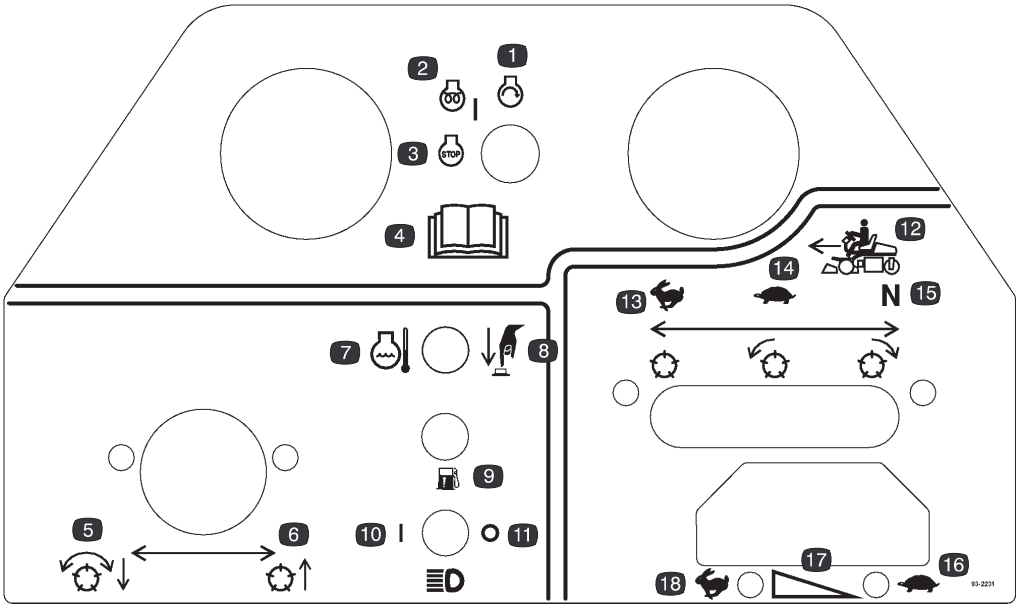

100-3183

1. Engine start
2. Engine preheat/on
3. Engine stop
4. Read the operator's manual.
5. Lowers the reels and engages them
6. Raises the reels
7. Engine coolant temperature
8. High temperature override
9. Water in the fuel indicator light
10. Headlights on
11. Headlights off
12. Functional control lever
13. Use for transport.
14. Use for mowing.
15. Neutral—use for backlapping reels.
16. Throttle—slow
17. Throttle—variable speed
18. Throttle—fast

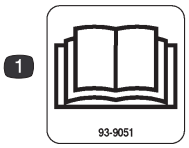

93-9051

1. Read the operator's manual.

104-7728

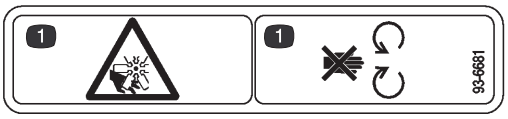

93-6681

1. Cutting/dismemberment hazard—stay away from moving parts.

104-7729 (for CE)

1. Danger—read the operator's manual before performing any maintenance.
2. Cutting hazard to hands or feet—wait until all machine components have stopped before touching them.

93-8069

1. Hot surface hazard—stay away.

93-6686

1. Hydraulic oil
2. Read the *Operator's Manual.*

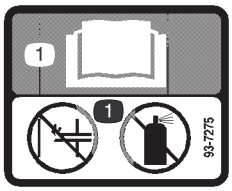

93-7275

1. Read the operator's manual—do not use starting fluid to start the engine.

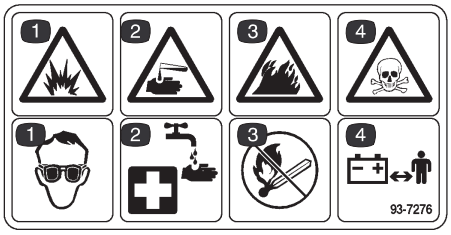

93-7276

1. Explosion hazard—wear eye protection.
2. Caustic liquid hazard—flush skin with water.
3. Fire hazard—sparks, flame, and smoking prohibited.
4. Poison—keep children away from the battery.

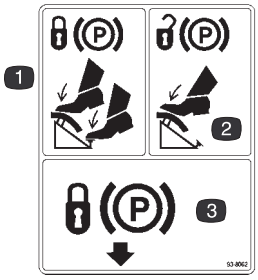

93-8062

1. To lock the parking brake, press the brake pedal and parking brake.
2. To unlock the parking brake, press the brake pedal.
3. Locks the parking brake

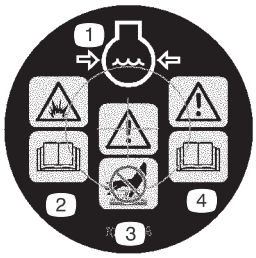

106-5976

1. Engine coolant under pressure
2. Explosion hazard—read the *Operator's Manual.*
3. Warning—do not touch the hot surface.
4. Warning—read the *Operator's Manual.*

104-2053

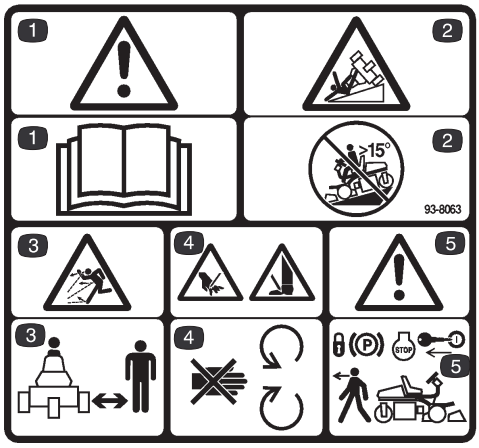

93-8063 (for CE)

1. Danger—read and understand the operator's manual.
2. Tipping hazard—do not travel down slopes greater than 15 degrees.
3. Thrown object hazard—keep bystanders away.
4. Cutting hazard to hands or feet—stay away from rotating blades and moving parts.
5. Danger—set the parking brake, stop the engine, and remove the key before leaving the operator's position.

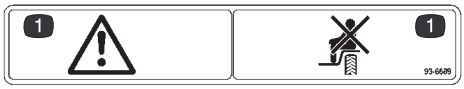

93-6689

1. Danger—do not sit on the plastic shroud.

104-2052

Specifications

General Specifications

Width of cut	59 in. (150 cm)
Wheel tread	50.5 in. (128 cm)
Wheel base	48.6 in. (123 cm)
Overall length (w/baskets)	93.9 in. (238 cm)
Overall width	68 in. (173 cm)
Overall height	50.5 in. (128 cm)
Weight w/reels (8 Blade 4 Bolt)	1338 lb. (608 kg)

Optional Equipment

8 Blade, 4 Bolt Cutting Unit	Model No. 04470
11 Blade, 4 Bolt Cutting Unit	Model No. 04471
8 Blade, SPA Cutting Unit	Model No. 04472
11 Blade, SPA Cutting Unit	Model No. 04473
Thatching Reels	Model No. 04493
Spiker	Model No. 04494
Tri-Roller	Model No. 04495
Turf Guardian Leak Detector	Model No. 04497
Backlap/Reel Speed Kit	Model No. 04498
Three Wheel Drive Kit	Model No. 04553
ROPS	Model No. 04552
Light Kit	Model No. 04551
Arm Rests	Model No. 30707
Spark Arrester	Part No. 94-8157
Hose Adapter Kit	Part No. 100-6430
Tie Down Kit	Part No. 94-6379
Oil Cooler Kit	Part No. 104-7701
Traction Tire	Part No. 99-4506

Setup

Loose Parts

Note: Use the chart below to verify all parts have been shipped.

Description	Qty.	Use
Wheel nuts	8	Mounting the front wheels
Wheels	2	
Wheel hub	1	Mounting the rear wheel
Wheel nuts	4	
Wheel	1	
Wheel bolt	1	
Locknut	1	
Spacers	2	
Seat	1	Mounting the seat to the seat base
Nut, 5/16 in.	4	
Steering wheel	1	Mounting the steering wheel
Cap	1	
Screw	1	
Pull link	2	Mounting the front rollers

Description	Qty.	Use
Gauge bar Screw, #10 x 5/8 in. Nut, #10	1 1 1	Setting the height-of-cut
Breather extension	1	Mount to the hydraulic reservoir.
Grass Basket	3	Mount to the pull frame.
Ignition key	2	
Service decal	11	Affix appropriate language decal over English service decal (100-3150).
Operator's manual (traction unit) Operator's manual (engine)	2 1	Read before operating the machine.
Operator video	1	Watch before operating the machine.
Parts Catalog Certificate of compliance Pre-delivery sheet Noise certificate	1 1 1 1	
Registration card (traction unit) Registration card (cutting unit)	1 1	Fill out and return to Toro.

Note: Mounting fasteners for the Greensmaster 3250-D cutting units are included with the cutting units.

Installing the Front Wheels

Mount the front wheels and torque the mounting nuts to 70–90 ft.-lb.

Installing the Rear Wheel

1. Mount the wheel hub to the rear wheel rim with 4 mounting nuts (Fig. 2). Torque the nuts to 70–90 ft.-lb.
2. Remove the wheel bolt and locknut from the wheel mounting holes in the rear castor fork (Fig. 2).
3. Install the rear wheel into the castor fork. Insert the wheel bolt into one of the castor fork mounting holes, install a spacer (supplied in loose parts), and slide the bolt through the wheel.
4. Install another spacer onto the bolt and route the bolt through the remaining castor fork mounting hole.
5. Position the bend of the wheel bolt head under the bottom edge of the adapter plate (Fig. 2). Install and tighten the locknut to secure the wheel to the castor fork. Do not overtighten the locknut as the wheel must rotate freely.
6. Wipe the grease fitting clean on the wheel assembly. Pump grease into the wheel hub until grease is seen exiting at both hub bearings. Wipe up excess grease.

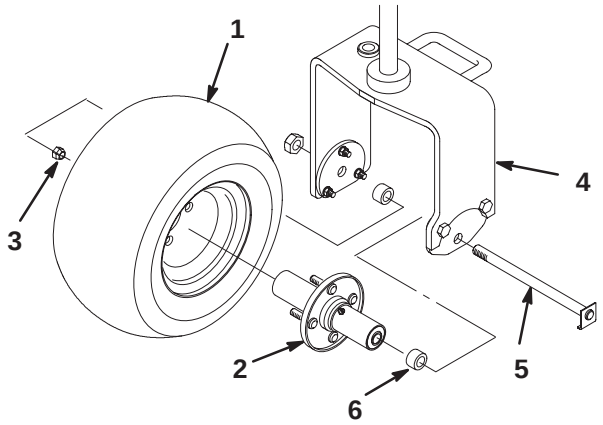

Figure 2

1. Rear wheel
2. Hub
3. Nut
4. Rear castor fork
5. Wheel bolt
6. Spacer (2)

Mounting the Seat

Note: Mount the seat slides in the front set of mounting holes to gain an additional 3 in. (7.6 cm) in the forward adjustment, or in the rear mounting holes for an additional 3 in. (7.6 cm) in the rearward adjustment.

1. Remove the locknuts securing the seat slides to the plywood shipping base. Discard the locknuts.
2. Connect the wire harness to the seat switch.
3. Secure the seat slides to the seat support with 4 locknuts (5/16 in.) supplied in the loose parts (Fig. 3).

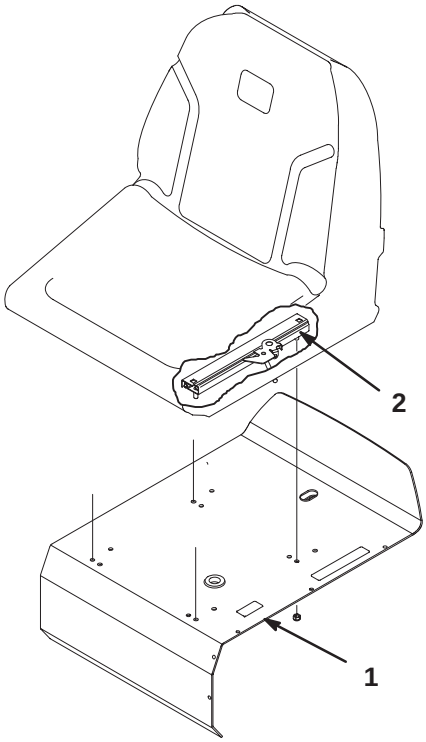

Figure 3

1. Seat support
2. Seat slide

Charging the Battery

Warning

Charging the battery produces gasses that can explode.

Never smoke near the battery and keep sparks and flames away from battery.

Warning

CALIFORNIA

Proposition 65 Warning

Battery posts, terminals, and related accessories contain lead and lead compounds, chemicals known to the State of California to cause cancer and reproductive harm. ***Wash hands after handling.***

1. Remove the battery from the machine.
2. The battery may need to be charged. Connect a 3 to 4 amp battery charger to the battery posts. Charge the battery at a rate of 3 to 4 amperes for 4 to 8 hours.

Warning

Battery terminals or metal tools could short against metal tractor components causing sparks. Sparks can cause the battery gasses to explode, resulting in personal injury.

- **When removing or installing the battery, do not allow the battery terminals to touch any metal parts of the tractor.**
- **Do not allow metal tools to short between the battery terminals and metal parts of the tractor.**

3. When the battery is charged, disconnect the charger from the electrical outlet and battery posts.
4. First, install the positive cable (red) to the positive (+) terminal and then the negative cable (black) to the negative (–) terminal of the battery and secure them with the bolts and nuts (Fig. 4). Slide the rubber boot over the positive terminal to prevent a possible short from occurring.

Warning

Incorrect battery cable routing could damage the tractor and cables causing sparks. Sparks can cause the battery gasses to explode, resulting in personal injury.

- **Always *disconnect* the negative (black) battery cable before disconnecting the positive (red) cable.**
- **Always *connect* the positive (red) battery cable before connecting the negative (black) cable.**

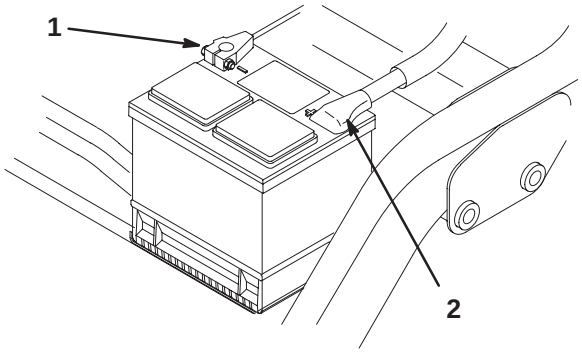

Figure 4

1. Negative (–)
2. Positive (+)

Installing the Steering Wheel

1. Slide the steering wheel onto the steering shaft.

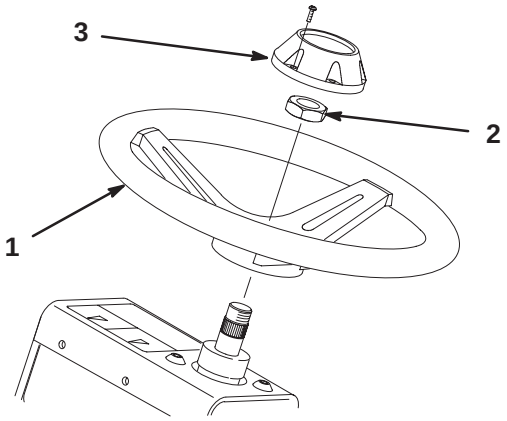

Figure 5

1. Steering wheel
2. Jam nut
3. Cap

2. Secure the steering wheel to the shaft with the jam nut (Fig. 5) and tighten it to 20–26 ft.-lb.

3. Install the cap to the steering wheel with the screw (Fig. 5).

Installing the Breather Extension and Reservoir Cap

1. Remove the breather cap from the hydraulic reservoir (Fig. 6).

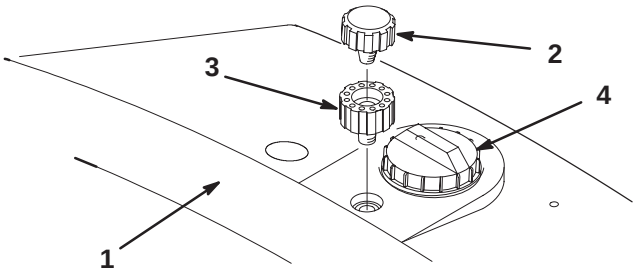

Figure 6

1. Hydraulic reservoir
2. Breather cap
3. Breather extension
4. Reservoir cap

2. Thread the breather extension into the reservoir (Fig. 6).

3. Thread the breather cap into the breather extension (Fig. 6).

4. Remove and discard the shipping cap from the hydraulic reservoir. Install the cap secured to the machine.

Mounting the Front Rollers

1. Mount an anti-scalp roller and a pull link assembly to the outer end of each front carrier frame with a roller shaft, spacer, washer, and screw (Fig. 7). Make sure the nylon bushing is in the pull link.

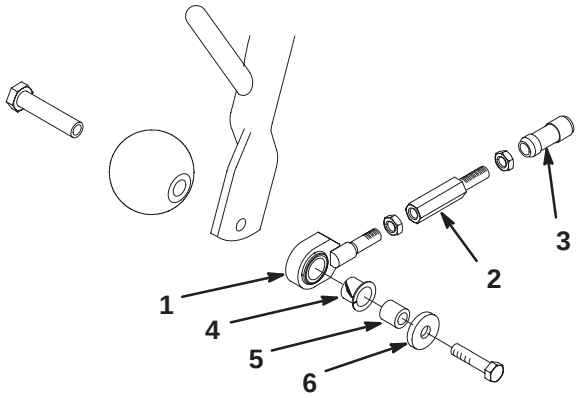

Figure 7

1. Pull link assembly
2. Pull link extension
3. Ball joint receiver
4. Nylon bushing
5. Spacer
6. Washer

2. Make sure all tires are inflated to 8–12 psi.

Adjusting Carrier Frame Rollers

1. Position the traction unit on a level surface and lower the cutting unit carrier frames to the floor.
2. Verify that there is 1/2 in. (13 mm) clearance between the carrier frame rollers and the floor.
3. If an adjustment is required, loosen the jam nut on the carrier frame stop screw (Fig. 8) and rotate the screw up or down to raise or lower the carrier frame. Tighten the jam nut after adjustment is attained.

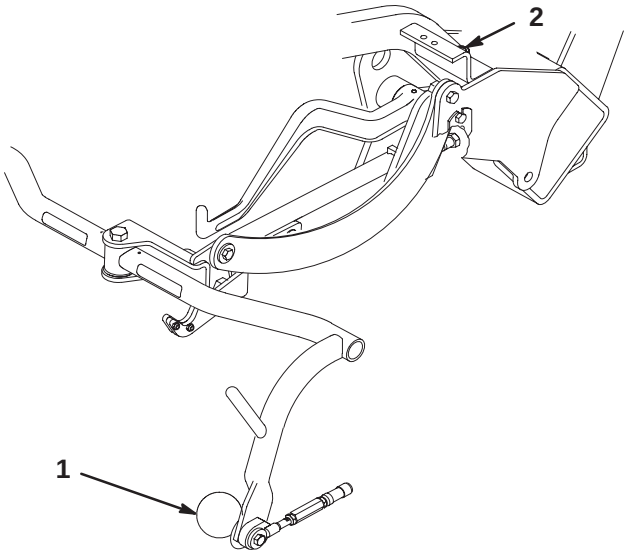

Figure 8

Right Front Shown

1. Carrier frame roller
2. Carrier frame stop screw

Note: If you are operating the machine in hot climates, where ambient temperatures range from 70 °F (20 °C) to 120 °F (49 °C), or using it for heavy-duty use (mowing other than greens, such as fairways or verticutting), install of a Hydraulic Oil Cooler Kit, Part No. 104–7701, to the traction unit.

Installing the Cutting Units

For Cutting Unit Models 04470, 04471, 04472, and 04473

Note: When sharpening, setting the height-of-cut, or performing other maintenance procedures on the cutting units, store the cutting unit reel motors in the support tubes on the front of the frame to prevent damage to the hoses.

Important Do not raise the suspension to the transport position when the reel motors are in the holders in the traction unit frame. Damage to the motors or hoses could result.

1. Remove the cutting units from the cartons. Assemble and adjust them per the Operator's Manual for the cutting units. Use the Height Gauge bar from the Loose Parts Kit to adjust the height of cut.
2. All cutting units are shipped with the counter weight mounted to the left end and the drive coupler mounted in the right end of the cutting unit. To mount the cutting unit in the right front position, proceed as follows:

   A. Remove the 2 capscrews securing the counter weight to the left end of the cutting unit. Remove the counter weight (Fig. 9, inset).

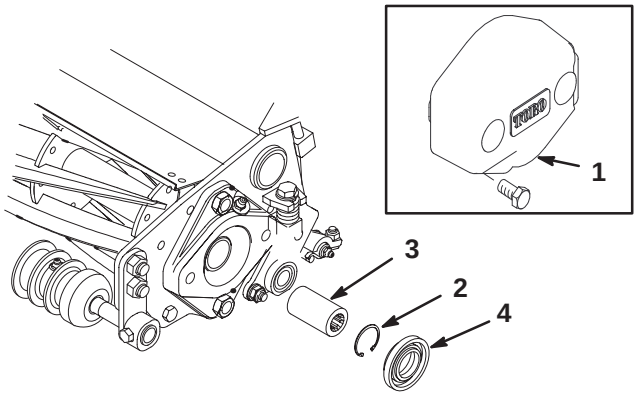

Figure 9

1. Counter weight
2. Snap ring
3. Drive coupler
4. Plastic spacer

   B. Remove the plastic spacer at both ends of the cutting unit (Fig. 9).

   C. Remove the snap ring securing the drive coupler in the right bearing housing. Remove the drive coupler.

   D. Apply grease to the inside diameter of the drive coupler. Install the drive coupler to the left end of the cutting unit with a snap ring (Fig. 9).

   E. Install the plastic spacer (tapered end toward the bearing) at both ends of the cutting unit.

   F. Install the counter weight to the right end of the cutting unit with the screws previously removed.

3. If you are installing Greensmaster 3200 cutting units with serial numbers ranging from 50001 through 99999, proceed as follows:

   A. Remove and discard the front shield assembly (Fig. 10). Also, remove and discard the shield mounting studs and fasteners secured to each cutting unit side plate.

   B. Remove the single-point pull arm from the front roller and discard.

C. Bend the grass shield side deflectors outward until they are flush with the cutting unit side plates (Fig. 10).

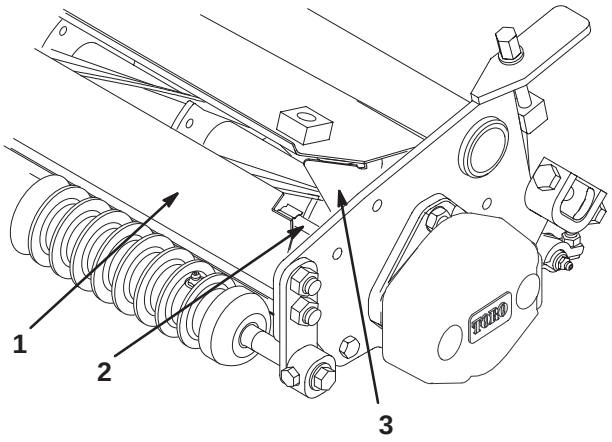

Figure 10

1. Front shield assembly
2. Front shield mounting studs
3. Grass shield side deflectors

4. Thread a ball stud into each end of the cutting unit front roller (Fig. 11).

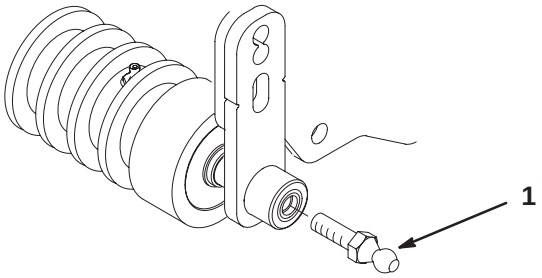

Figure 11

1. Ball stud

5. Slide the cutting unit under the pull frame while hooking the lift roller onto the lift arm. To facilitate installation of the rear cutting unit, the pull frame can be rotated and latched into a service position:

A. Lower the suspension system completely (cylinders extended).

B. Lift the carrier frame by hand until the anti-scalp rollers clear the brake linkage.

C. Lift up on the slotted link and rotate the pull frame into the wire hook (Fig. 12).

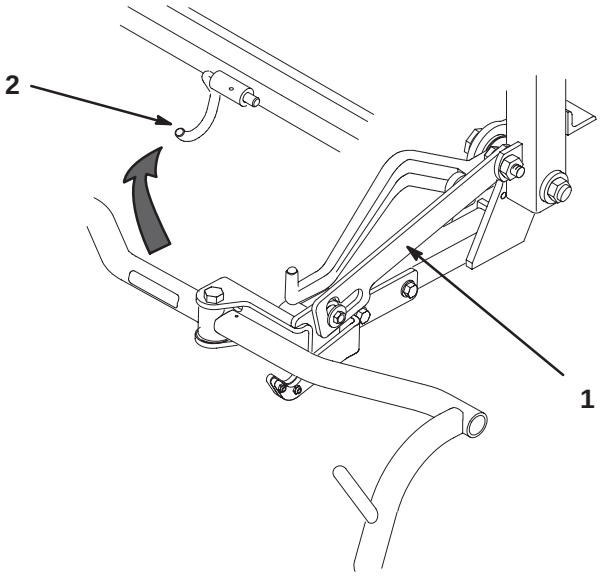

Figure 12

1. Slotted link
2. Wire hook

D. With the cutting unit in position, release the wire hook and rotate the pull frame to the operating position. The slotted link locks automatically.

E. Attach the motor and pull links.

Important Do not operate the lift system when the center cutting unit is in the service position. Damage could result to the pull frame and clevis assembly.

Note: When installing cutting units with groomers, and the groomer carton label does not read “with extension brackets,” Groomer Extension Kit, Part No. 99-4255, is required.

6. Slide the sleeve back on each ball joint receiver and hook the receiver onto the cutting unit ball stud (Fig. 13).

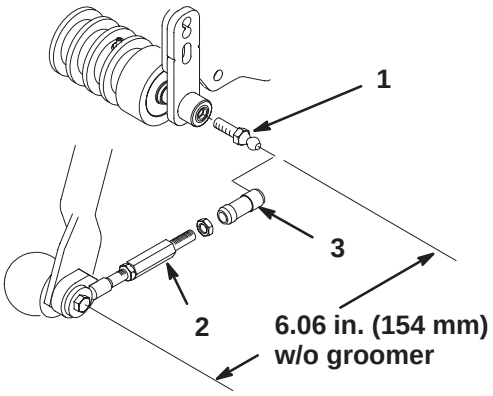

Figure 13

1. Ball stud
2. Pull arm extension
3. Ball joint receiver

Note: The pull link assemblies are preset at the factory. If they ever need to be disassembled, reassemble them to the dimensions shown in Figure 13.

7. Mount the basket onto the carrier frame.

8. Adjust the pull links until there is 1/4 to 3/8 in. (6 to 9 mm) clearance between the lip of the basket and the reel blades. Make sure the basket lips are equidistant from the reel blades all the way across the reel blades.

9. Assemble the mounting screws for the reel drive motor to each cutting unit. Leave approximately 1/2 in. (13 mm) of the threads exposed on each mounting screw (Fig. 14).

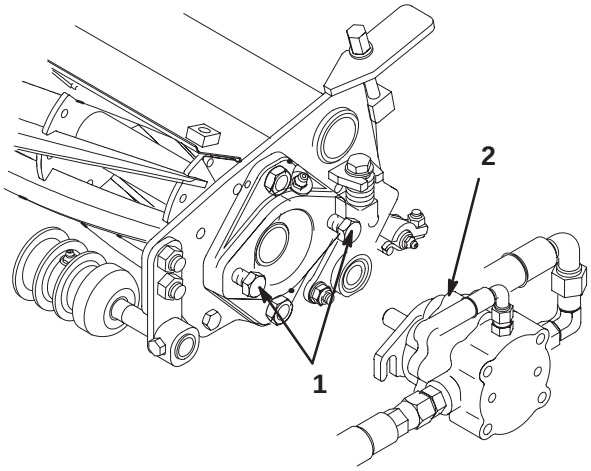

Figure 14

1. Screws
2. Drive motor

10. Remove the protective covers from the cutting units and the reel drive motor shafts.

Note: Retain the protective covers for the cutting units. Install them whenever the reel drive motors are removed to protect the cutting unit bearings from contamination.

11. Coat the spline shaft of the motor with clean grease and install the motor by rotating the motor clockwise so the motor flanges clear the studs. Rotate the motor counterclockwise until the flanges are encircling the studs and tighten the mounting capscrews (Fig. 14).

12. Using a hand pump grease gun, fill the cavity at the end of the cutting unit with #2 general purpose grease.

Adjusting the Transport Height

Check the transport height (Fig. 15) and adjust, if required, as follows:

1. Position the tractor on a level surface.

2. Verify that the distance from the top of the carrier frame adjusting screw (Fig. 15) and the back of the carrier frame is 7/8 in. (22 mm).

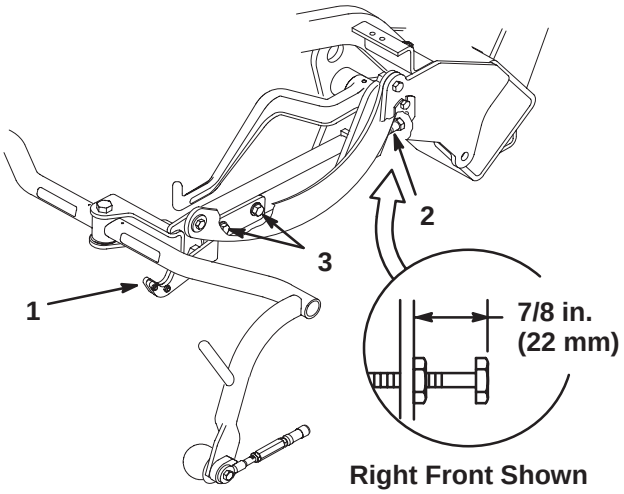

Figure 15

1. Transport plate
2. Adjusting screw
3. Transport plate mounting screw

3. Loosen the transport plate mounting screws (Fig. 15).

4. Raise the cutting units to the transport position.

Important Do not raise the suspension to the transport position when the reel motors are in the holders in the traction unit frame. Damage to the motors or hoses could result.

5. Ensure each carrier frame is at the same height from the ground. If they are, proceed to step 7.

6. If the carrier frames are not at the same height, loosen the jam nut on the carrier frame adjusting screw (Fig. 15). Rotate the screw outward to raise and inward to lower. Tighten the jam nut after the proper height is obtained.

7. Rotate the transport plate until it locks the pull frame. Tighten the screws.

Before Operating

Checking the Engine Oil

The engine uses any high-quality detergent oil having the American Petroleum Institute (API) service classification of CD, CE, CF or CF-4 or CG-4 or higher. The recommended viscosity (weight) is SAE 10W30.

The engine is shipped with 3.5 quarts (w/ filter) (3.3 l) of oil in the crankcase; however, the level of oil must be checked before and after the engine is first started.

1. Position the machine on a level surface.
2. Remove the dipstick and wipe it with a clean rag (Fig. 17). Push the dipstick into the tube and make sure it is seated fully. Remove the dipstick from the tube and check the level of oil. If the oil level is low, remove the filler cap from the valve cover and **slowly** add enough oil to raise the level to the Full mark on the dipstick. Add the oil slowly and check the level often during this process. **Do not overfill.**

Important Make sure that the dipstick is removed while filling the engine with oil.When adding engine oil or filling oil, there must be clearance between the oil fill device and the oil fill hole in the valve cover as shown in figure 16. This clearance is necessary to permit venting when filling, which prevents oil from overrunning into breather.

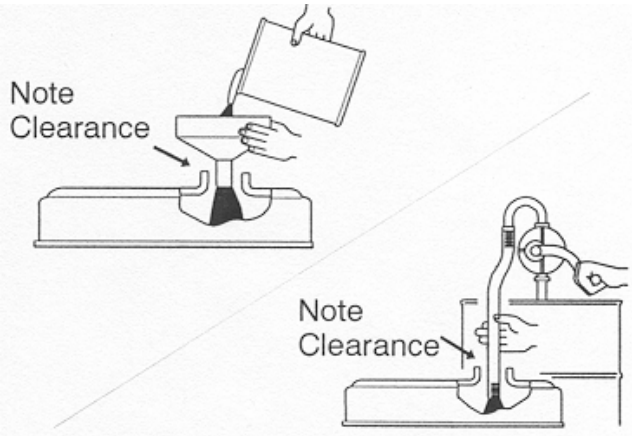

Figure 16

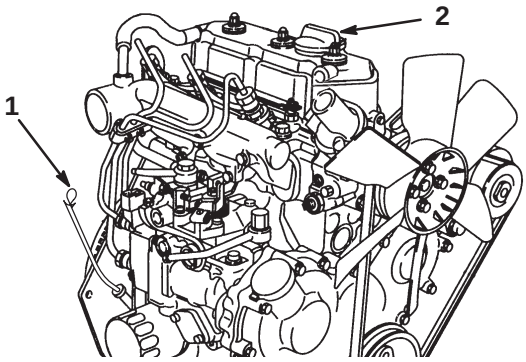

Figure 17

1. Dipstick
2. Filler cap

3. Replace the dipstick.
4. Start and run the engine at idle for 30 seconds, then shut the engine off. Wait 30 seconds, then repeat steps 2–3.

Important Check the level of oil every 8 operating hours or daily. Change the oil and filter initially after the first 50 hours of operation, thereafter change the oil every 50 hours and the filter every 100 hours. However, change the oil more frequently when the engine is operated in extremely dusty or dirty conditions.

5. Install the filler cap and dipstick firmly in place.

Filling the Fuel Tank

The engine runs on No. 2 diesel fuel.

The fuel tank capacity is approximately 6 gallons (22.7 l).

1. Clean the area around the fuel tank cap (Fig. 18).

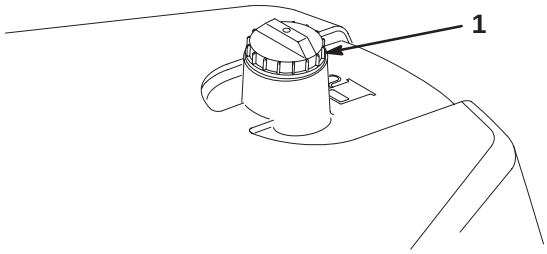

Figure 18

1. Fuel tank cap

2. Remove the fuel tank cap.

Danger

Under certain conditions, diesel fuel and fuel vapors are highly flammable and explosive. A fire or explosion from fuel can burn you and others and can cause property damage.

- **Use a funnel and fill the fuel tank outdoors, in an open area, when the engine is off and is cold. Wipe up any fuel that spills.**
- **Do not fill the fuel tank completely full. Add fuel to the fuel tank until the level is 1/4 to 1/2 in. (6 to 13 mm) below the bottom of the filler neck. This empty space in the tank allows the fuel to expand.**
- **Never smoke when handling fuel, and stay away from an open flame or where fuel fumes may be ignited by a spark.**
- **Store fuel in a clean, sealed, safety-approved container.**

3. Fill the tank until the level is 1/4 to 1/2 in. (6 to 13 mm) below the bottom of the filler neck. **Do not overfill.** Install the cap.

4. Wipe up any fuel that may have spilled.

Checking the Cooling System

The capacity of the cooling system is approximately 3.6 qts. (3.4 L).

Clean debris off of the radiator screen and radiator daily (Fig. 19) or hourly if conditions are extremely dusty and dirty; refer to Cleaning the Radiator and Screen, page 30.

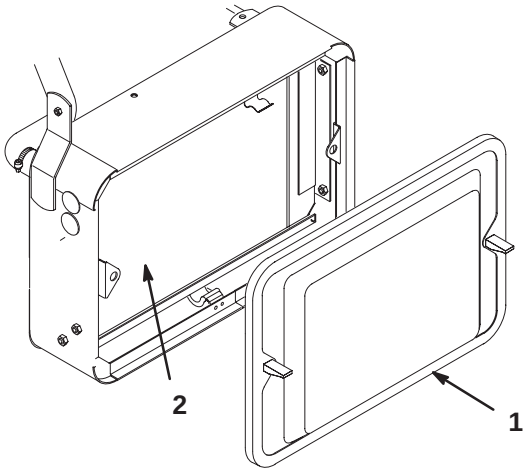

Figure 19

1. Radiator screen
2. Radiator

The cooling system is filled with a 50/50 solution of water and permanent ethylene glycol antifreeze. Check the level of the coolant at the beginning of each day before starting the engine.

Caution

If the engine has been running, the pressurized, hot coolant can escape and cause burns.

- **Do not open the radiator cap when the engine is running.**
- **Use a rag when opening the radiator cap, and open the cap slowly to allow steam to escape.**

1. Park the machine on a level surface.

2. Check the coolant level (Fig. 20). It should be between the lines on the reserve tank when the engine is cold.

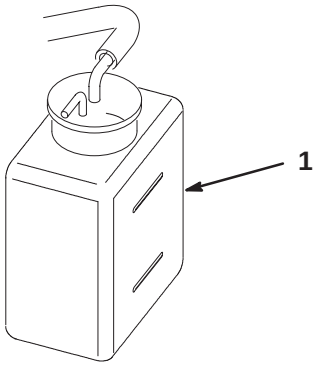

Figure 20

1. Reserve tank

3. If the coolant is low, remove the reserve tank cap and add a 50/50 mixture of water and permanent ethylene glycol antifreeze. **Do not overfill.**

4. Install the reserve tank cap.

Servicing the Hydraulic System Fluid

Recommended Hydraulic Fluid

The machine's reservoir is filled at the factory with approximately 5.5 gallons (20.8 liters) of high quality hydraulic fluid. **Check the level of hydraulic fluid before the engine is first started and daily thereafter.** The appropriate hydraulic oils are listed below.

The following list is not assumed to be all-inclusive. Hydraulic fluids produced by other manufacturers may be used if they can cross reference to find an equivalent to the products listed. Toro will not assume responsibility for

damage caused by improper substitutions, so use only products from reputable manufacturers who will stand behind their recommendation.

Multigrade Hydraulic Fluid—ISO VG 46 Normal Climate 32°F (0°C) to 110°F (43°C)

Mobil	DTE 15M
Amoco	Rykon Premium ISO 46
Chevron	Rykon Premium Oil ISO 46
Conoco	Hydroclear AW MV46
Exxon	Univis N46
Pennzoil	AWX MV46
Shell	Tellus T 46
Texaco	Rando HDZ 46

Important The ISO VG 46 Multigrade fluid has been found to offer optimal performance in a wide range of temperature conditions. For operation in consistently high ambient temperatures, 65°F (18°C) to 120°F (49°C), ISO VG 68 hydraulic fluid may offer improved performance.

High Operating Temperature Fluid—ISO VG 68

Mobil	DTE 26
Amoco	Rykon AW No. 68
Chevron	Hydraulic Oil AW ISO 68
Conoco	Hydroclear AW MV46 68
Exxon	Nuto H 68
Pennzoil	AW Hydraulic Oil 68
Shell	Tellus 68
Texaco	Rando HD 68

Biodegradable Hydraulic Fluid—Mobil 224H

Important Mobil EAL 224H is the only biodegradable oil tested and approved by Toro. Contamination by mineral–based hydraulic fluids will change the biodegradability and toxicity of this oil. When changing from standard fluid to the biodegradable type, be certain to follow the approved flushing procedure published by Mobil. Contact your Toro Distributor for details. The oil is available in 5 gallon (19 l) containers from your Toro Distributor, order part no. 100–7674.

Note: Use of this fluid requires installation of an Oil Cooler Kit, Part No. 104–7701, to the traction unit. This biodegradable fluid will break down quickly if the temperature exceeds 180°F (82°C).

Premium Biodegradable Hydraulic Fluid—Mobil EAL EnviroSyn 46H

Important Mobil EAL EnviroSyn 46H is the only synthetic biodegradable fluid approved by Toro. This fluid is compatible with the elastomers used in Toro hydraulic systems and is suitable for a wide–range of temperature conditions. This fluid is compatible with conventional mineral oils, but for maximum biodegradability and performance the hydraulic system should be thoroughly flushed of conventional fluid. The oil is available in 5 gallon (19 l) containers or 55 gallon drums from your Mobil Distributor.

Note: Many hydraulic fluids are almost colorless, making it difficult to spot leaks. A red dye additive for the hydraulic system oil is available in 2/3 oz. (20 ml) bottles. One bottle is sufficient for 4–6 gal. (15–22 l) of hydraulic oil. Order Part No. 44-2500 from your Authorized Toro Distributor. **This red dye is not recommended for use with biodegradable fluids. Use food coloring.**

Important Regardless of hydraulic fluid type used, any traction unit used for mowing fairways, verticutting or used during ambient temperatures 65°F (18°C) to 120°F (49°C) should have Oil Cooler Kit, Part No. 104–7701, installed.

Filling the Hydraulic Tank

1. Position the machine on a level surface. Make sure the machine has cooled down so the fluid is cold.
2. Remove the cap from the reservoir and check the level of fluid. The fluid should be up to the bottom of the screen in the filler neck (Fig. 21).
3. If the fluid level is low, slowly fill the reservoir with the appropriate hydraulic fluid until the level reaches the bottom of the screen. **Do not overfill.**

Important To prevent system contamination, clean the top of the hydraulic fluid containers before puncturing. Ensure the pour spout and funnel are clean.

4. Install the reservoir cap. Wipe up any fluid that may have spilled.

Important Check level of hydraulic fluid before engine is first started and daily thereafter.

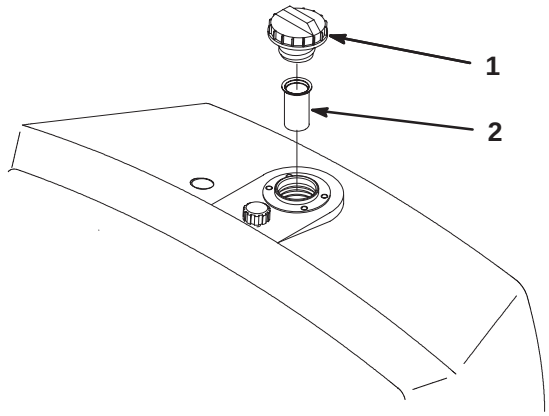

Figure 21

1. Hydraulic reservoir cap
2. Screen

Draining Water from the Fuel Filter/Water Separator

Any water accumulation should be drained from the fuel filter/water separator before each use or when the warning light glows.

1. Position the machine on a level surface and stop the engine.
2. Place a drain pan under the fuel filter.
3. Open the drain plug on the fuel filter/water separator approximately one turn and drain any accumulated water. If necessary, operate the priming pump to drain the water (Fig. 22). Tighten the plug after draining.
4. Start the engine and make sure the warning light goes out. Check for leaks.

Note: Because the accumulated water will be mixed with diesel fuel, drain the fuel filter into a suitable container and dispose of it properly.

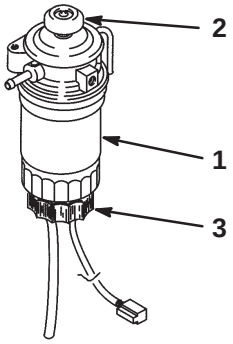

Figure 22

1. Fuel filter
2. Priming pump
3. Drain plug

Checking the Tire Pressure

The tires are over-inflated for shipping. Therefore, release some of the air to reduce the pressure. The correct air pressure is:

- Front tires: 8–12 psi
- Rear tire: 8–15 psi

Checking the Reel-to-Bedknife Contact

Each day before operating the machine, check the reel-to-bedknife contact, regardless if the quality of cut had previously been acceptable. There must be light contact across the full length of the reel and bedknife; refer to Adjusting the Reel to Bedknife in the Cutting Unit Operator's Manual).

Checking the Torque of the Wheel Nuts

Torque the wheel nuts to 70–90 ft.-lb. after 1–4 hours of operation and again after 10 hours of operation. Torque them every 200 hours thereafter.

Warning

Failure to maintain proper torque of the wheel nuts could result in personal injury.

Torque the wheel nuts to 70–90 ft.-lb. after 1–4 hours of operation and again after 10 hours of operation. Torque every 200 hours thereafter.

Operation

Think Safety First

Please carefully read all the safety instructions on pages 3 thru 7. Knowing this information could help you and others avoid injury.

The use of protective equipment, such as, but not limited to, for eyes, ears, feet, and head is recommended.

Caution

This machine produces sound levels in excess of 85dBA at the operators ear and can cause hearing loss through extended periods of exposure.

Wear hearing protection when operating this machine.

Controls

Traction Pedal

The traction pedal (Fig. 23) has three functions: to make the machine move forward, to move it backward, and to stop the machine. Depress the top of the pedal to move forward and the bottom of the pedal to move backward or to assist in stopping when moving forward. Also, allow the pedal to move to the neutral position to stop the machine. For operator comfort, do not rest the heel of your foot on reverse when operating forward (Fig. 24).

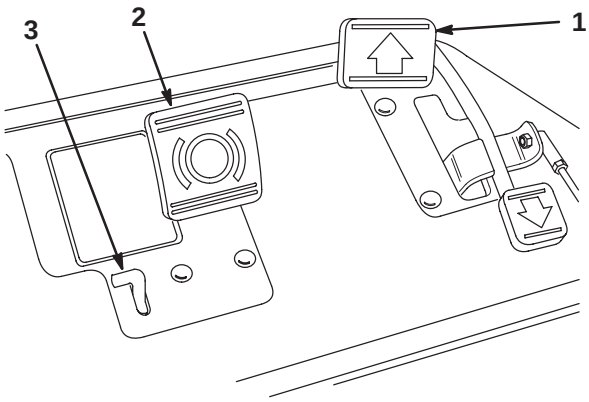

Figure 23

1. Traction pedal
2. Brake pedal
3. Parking brake lever

Figure 24

Brake Pedal

The Brake Pedal (Fig. 23) actuates an automotive drum-type mechanical brake located at each traction wheel.

Parking Brake Lever

Depressing the brake pedal to actuate the brake assembly, then depressing the small lever indicated (Fig. 23) will keep the brakes actuated for parking. Disengage the parking brake by depressing the brake pedal. Lock the parking brake any time you leave the machine.

Throttle Control

The throttle control (Fig. 25) gives the operator the ability to control the speed of the engine. Moving the throttle control toward the Fast position increases the engine RPM; moving the throttle control toward Slow will decrease the engine RPM. Ground speeds are as follows:

- 2 to 5 MPH (3.2 to 8 km/h) forward mowing speed
- 8.8 MPH (14.1 km/h) maximum transport speed
- 2.5 MPH (4.0 km/h) reverse speed

Functional Control Lever

The functional control lever (Fig. 25) provides two traction selections plus a Neutral position. It is permissible to shift from mow to transport or transport to mow (not to neutral) while the machine is in motion. No damage will result.

- Rear Position—neutral and backlapping
- Middle Position—used for mowing operation
- Front Position—used for transport operation

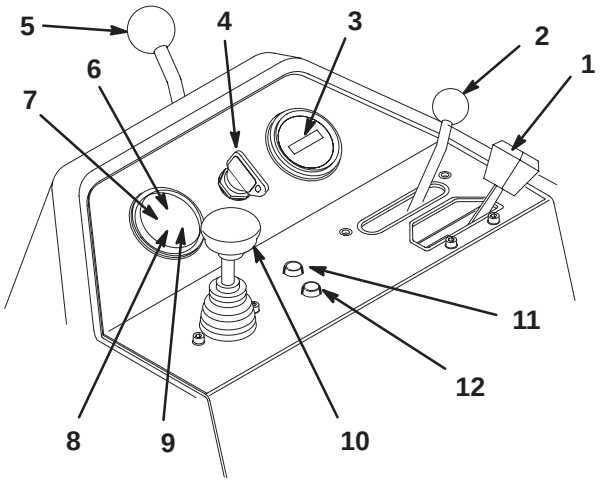

Figure 25

1. Throttle control
2. Functional control lever
3. Hour meter
4. Ignition switch
5. Steering arm locking lever
6. Water temperature light
7. Engine oil pressure light
8. Battery warning light
9. Glow plug light
10. Raise/Lower Mow Control
11. High temperature override button
12. Water in fuel indicator light

Hour Meter

The hour meter (Fig. 25) indicates the total hours of machine operation. The hour meter starts to function whenever the key switch is rotated to On.

Ignition Switch

Insert the key into the switch (Fig. 25) and rotate it clockwise as far as possible to the Start position to start the engine. Release the key as soon as the engine starts; the key will move to the On position. Rotate the key counterclockwise to the Off position to stop the engine.

Steering Arm Locking Lever

Rotate the lever (Fig. 25) rearward to loosen the adjustment, raise or lower the steering arm for operator comfort, then, rotate the lever forward to tighten the adjustment.

Water Temperature Light

The light (Fig. 25) glows and the engine automatically shuts down when the engine coolant temperature gets too high.

Water in the Fuel Indicator Light

The light (Fig. 25) glows when water is detected in the fuel.

Important Water must be drained from the fuel filter/water separator to avoid serious engine damage; refer to Draining Water from Fuel Filter/Water Separator, page 20.

High Temperature Override Button

If the engine kills due to an overheating condition, press the override button (Fig. 25) in and hold it until the machine can be moved to a safe location and allowed to cool down.

Note: When using the override button, it must be held down continuously to operate. Do not use it for extended periods of time.

Glow Plug Indicator Light

When the glow plug indicator light (Fig. 25) is lit, it indicates the glow plugs are on.

Battery Warning Light

The light (Fig. 25) glows if the battery charge is low.

Oil Pressure Light

The light (Fig. 25) glows if the engine oil pressure drops below a safe level.

Raise/Lower Mow Control

Moving the control (Fig. 25) forward during operation lowers the cutting units and starts the reels. Pull back on the control to stop the reels and raise the cutting units. During operation the reels can be stopped by pulling back on the control momentarily and releasing it. Restart the reels by moving the control forward.

Seat Adjusting Lever

The seat adjusting lever on the left side of the seat (Fig. 26) allows a 7 in. (cm) fore and aft adjustment.

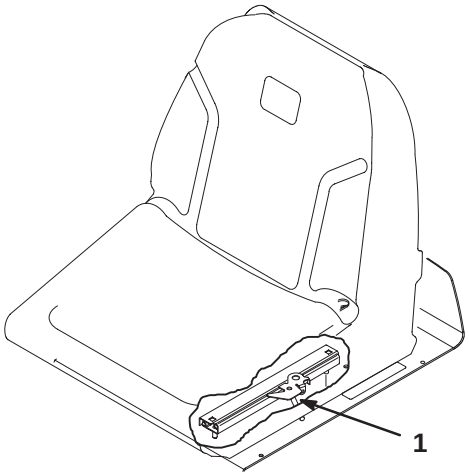

Figure 26

1. Seat adjusting handle

Fuel Shut-Off Valves

Close the fuel shut-off valve (Fig. 27), under fuel tank, when storing the machine.

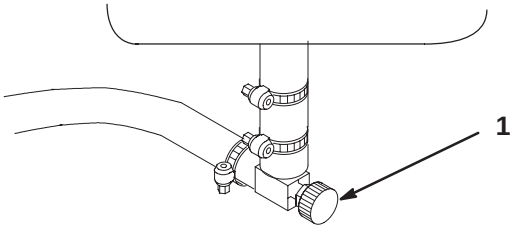

Figure 27

1. Fuel shut-off (under fuel tank)

Break-In Period

Only 8 hours of mowing operation is required for the machine break-in period.

Since the first hours of operation are critical to future dependability of the machine, monitor its functions and performance closely so that minor difficulties, which could lead to major problems, are noted and can be corrected. Inspect the machine frequently during break-in for signs of oil leakage, loose fasteners, or any other malfunction.

To ensure optimum performance of the brake system, burnish (break-in) the brakes before using the machine. To burnish the brakes, firmly apply the brakes and drive the machine at mowing speed until the brakes are hot, as

indicated by their smell. An adjustment to the brakes may be required after break-in; refer to Adjusting the Brakes, page 32.

Starting and Stopping the Machine

Starting

Important The fuel system may have to be bled if any of the following situations have occurred:

- Initial start up of a new engine
- The engine has ceased running due to lack of fuel.
- Maintenance has been performed upon fuel system components; ie. filter replaced, etc.

Refer to Bleeding the Fuel System, page 23.

Important Do not use ether or other types of starting fluid.

1. Be sure the parking brake is set, the raise/lower mow control is disengaged, and the functional control is in the neutral position.
2. Remove your foot from the traction pedal and make sure the pedal is in the neutral position.
3. Move the throttle lever to full throttle position.
4. Insert the key into the switch and rotate it to On. Hold it in the On position until the glow plug indicator light goes off (approximately 6 seconds).
5. Immediately turn the ignition key to the Start position. Release the key when the engine starts and allow it to move to the On position. Move the throttle control to Slow.

Important To prevent overheating of the starter motor, do not engage the starter longer than 10 seconds. After 10 seconds of continuous cranking, wait 60 seconds before engaging the starter motor again.

6. When the engine is started for the first time, or after an overhaul of the engine, operate the machine in forward and reverse for one to two minutes. Turn the steering wheel to the left and right to check the steering response. Then shut the engine off (see Stopping in Starting and Stopping the Engine, page 23) and wait for all moving parts to stop. Check for oil leaks, loose parts and any other noticeable malfunctions.

Stopping

1. Move the throttle control to Slow, disengage the raise/lower mow control, and move the functional control to neutral.
2. Rotate the starter key to Off to shut the engine off. Remove the key from the switch to prevent accidental starting.
3. Close the fuel shut-off valves before storing the machine.

Bleeding the Fuel System

1. Position the machine on a level surface. Make sure the fuel tank is at least half full.
2. Press the primer button on top of the fuel filter until resistance is felt (Fig. 28).

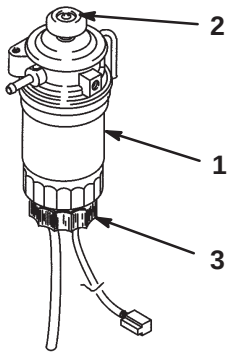

Figure 28

1. Fuel filter
2. Priming pump
3. Drain plug

3. Start the engine and continue to operate the primer button until the engine runs smooth.

Testing the Safety Interlock System

Caution

If safety interlock switches are disconnected or damaged the machine could operate unexpectedly causing personal injury.

- **Do not tamper with the interlock switches.**
- **Check the operation of the interlock switches daily and replace any damaged switches before operating the machine.**
- **Replace switches every two years regardless of whether they are operating properly or not.**

The purpose of the safety interlock system is to prevent operation of the machine where there is possible injury to the operator or the machine.

The safety interlock system prevents the engine from starting unless:

- The traction pedal is in neutral.
- The functional control lever is in neutral.

The safety interlock system prevents the machine from moving unless:

- The parking brake is off.
- The operator is seated.
- The functional control lever is in Mow or Transport.

The safety interlock system prevents the reels from operating unless the functional control lever is in the Mow position.

Perform the following system checks daily to be sure the interlock system is operating correctly:

1. Sit on the seat, move the traction pedal to Neutral, move the functional control lever to Neutral, and engage the parking brake. Try to depress the traction pedal. The pedal should not depress, which means that the interlock system is operating correctly. Correct the problem if it is not operating properly.
2. Sit on the seat, move the traction pedal to Neutral, move the functional control lever to Neutral, and engage the parking brake. Move the functional control lever to mow or transport and try to start the engine. The engine should not crank, which means that the interlock system is operating correctly. Correct the problem if it is not operating properly.
3. Sit on the seat, move the traction pedal to Neutral, move the functional control lever to Neutral, and engage the parking brake. Start the engine and move the functional control lever to mow or transport. The engine should kill, which means that the interlock system is operating correctly. Correct the problem if it is not operating properly.
4. Sit on the seat, move the traction pedal to Neutral, move the functional control lever to Neutral, and engage the parking brake. Start the engine. Release the parking brake, move the functional control lever to mow, and rise from the seat. The engine should kill, which means that the interlock system is operating correctly. Correct the problem if it is not operating properly.
5. Sit on the seat, move the traction pedal to Neutral, move the functional control lever to Neutral, and engage the parking brake. Start the engine. Move the raise/lower mow control forward to lower the cutting units. The cutting units should lower but not start rotating. If they do, the interlock system is not operating correctly. Correct the problem.

Preparing the Machine for Mowing

To assist in aligning the machine for successive cutting passes, it is suggested that the following be done to the No. 2 and No. 3 cutting unit baskets:

1. Measure in approximately 5 in. (12.7 cm) from the outer edge of each basket (Fig. 29).
2. Either place a strip of white tape or paint a line onto each basket paralleling the outer edge of each basket (Fig. 29).

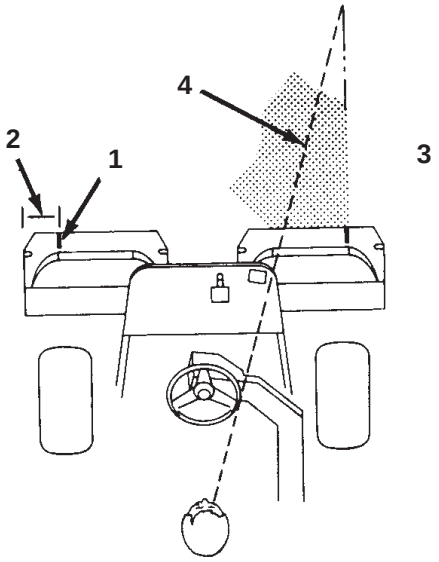

Figure 29

1. Alignment strip
2. Approximately 5 in. (12.7 cm)
3. Cut grass on right
4. Keep focal spot 6–10 ft. (1.8–3 m) ahead of the machine

Training Period

Before mowing greens with the machine, find a clear area and practice starting and stopping, raising and lowering the cutting units, turning, etc. This training period will be beneficial to the operator in gaining confidence in the performance of the machine.

Before Mowing

Inspect the green for debris, remove the flag from the cup, and determine the direction best to mow. Base the direction to mow on the previous mowing direction. Always mow in

an alternate pattern from the previous mowing, so that the grass blades will be less apt to lay down and therefore be difficult to trap between the reel blades and bedknife.

Mowing Procedures

1. Approach the green with the functional control lever in the Mow position and the throttle at full speed. Start on one edge of the green so the ribbon procedure of cutting may be used. This holds compaction to a minimum and leaves a neat, attractive pattern on the greens.

2. Actuate the raise/lower mow lever as the front edge of the grass baskets cross the outer edge of the green. This procedure drops the cutting units to the turf and starts the reels.

Important Familiarize yourself with the fact that the No. 1 cutting unit reel is delayed when lowering and raising, therefore, you should practice to try to gain the required timing necessary to minimize the cleanup mowing operation.

3. Overlap a minimal amount with the previous cut on return passes. To assist in maintaining a straight line across the green and to keep the machine an equal distance from the edge of the previous cut, establish an imaginary sight line approximately 6 to 10 ft. (1.8 to 3 m) ahead of the machine to the edge of the uncut portion of the green (Fig. 30). Some find it useful to include the outer edge of the steering wheel as part of the sight line; i.e. keep the steering wheel edge aligned with a point that is always kept the same distance away from the front of the machine.

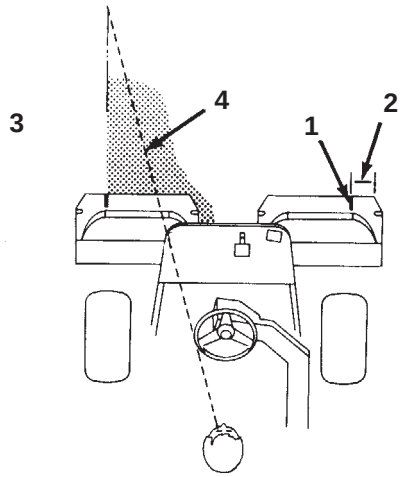

Figure 30

1. Alignment strip
2. Approximately 5 inches
3. Cut grass on right
4. Keep focal spot 6–10 ft. (1.8–3 m) ahead of machine

4. As the front of the baskets cross the edge of the green, pull back on the raise/lower mow lever. This will stop the reels and lift the cutting units. Timing of this procedure is important, so the mowers do not cut into the fringe area. However, as much of the green as possible should be cut to minimize the amount of grass left to mow around the outer periphery.

5. Cut down on operating time and ease lineup for the next pass by momentarily turning the machine in the opposite direction, then turning in the direction of the uncut portion; i.e., if intending to turn right, first swing slightly left, then right. This will assist in getting the machine more quickly aligned for the next pass. Follow the same procedure for turning in the opposite direction. It is a good practice to try to make as short a turn as possible. However, turn in a wider arc during warmer weather to minimize the possibility of bruising the turf.

Important The machine should never be stopped on a green with the cutting unit reels operating as damage to the turf may result. Stopping on a wet green with the machine may leave marks or indentations from the wheels.

6. Finish cutting the green by mowing the outer periphery. Be sure to change the direction of cutting from the previous mowing. Always keep weather and turf conditions in mind and be sure to change the direction of mowing from the previous cutting. Replace the flag.

Note: At the end of the periphery cut, momentarily pull back on the raise/lower mow lever to shut the reels off without raising them. Continue moving forward until the reel stops rotating, then, drive off the green and raise the reels (This will help prevent dribbling grass onto the green while raising the reels).

7. Empty the grass baskets of all clippings before transporting to the next green. Heavy wet clippings place an undue strain on the baskets and will add unnecessary weight to the machine, thereby increasing the load on the engine, hydraulic system, brakes, etc.

Transport Operation

Make sure the cutting units are in the full up position. Move the functional control lever to the transport position. Use the brakes to slow the machine while going down steep hills to avoid loss of control. Always approach rough areas at a reduced speed and cross severe undulations carefully. Familiarize yourself with the width of the machine. Do not attempt to pass between objects that are close together so that costly damage and down time can be prevented.

Inspection and Clean-Up After Mowing

At the completion of the mowing operation, thoroughly wash the machine with a garden hose without a nozzle so excessive water pressure will not cause contamination and damage to seals and bearings. **Never wash a warm engine or electrical connections with water.**

After cleaning, it is recommended the machine be inspected for possible hydraulic fluid leaks and damage or wear to hydraulic and mechanical components. The cutting units should be checked for sharpness. Also, lubricate the mow and lift pedal and brake shaft assembly with SAE 30 oil or spray lubricant to deter corrosion and help keep the machine performing satisfactorily during the next mowing operation.

Towing the Traction Unit

In case of an emergency, the machine can be towed for a short distance (less than 1/4 mile [0.4 km]). However, we do not recommend this as a standard procedure.

Important Do not tow the machine faster than 2–3 MPH (3–5 km/h) because the drive system may be damaged. If the machine must be moved a considerable distance, transport it on a truck or trailer.

1. Locate the bypass valve on the pump and rotate it so that the slot is vertical (Fig. 31).

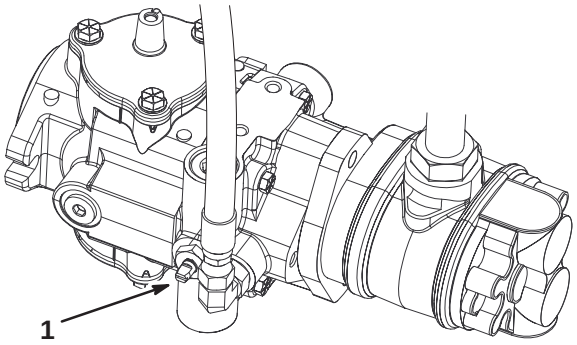

Figure 31

1. Bypass valve—slot shown in closed (horizontal) position

2. Before starting the engine, close the bypass valve by rotating it so that the slot is horizontal (Fig. 31). Do not start the engine when the valve is open.

Maintenance

Note: Determine the left and right sides of the machine from the normal operating position.

Recommended Maintenance Schedule

Maintenance Service Interval	Maintenance Procedure
After first 8 hours	• Change the engine oil. • Check the fan/alternator belt tension. • Replace the engine oil filter.
After first 50 hours	• Replace the hydraulic oil filter. • check the engine RPM (at idle and full throttle)
Every 50 hours	• Check the battery electrolyte level. • Check the battery cable connections. • Service the air filter. • Lubricate all grease fittings. • Change the engine oil. • Check the fan/alternator belt tension.
Every 100 hours	• Replace the engine oil filter.
Every 200 hours	• Replace the air filter element. • Torque the wheel lug nuts.

Maintenance Service Interval	Maintenance Procedure
Every 800 hours	• Replace the hydraulic oil. • Replace the hydraulic oil filter. • Check the engine RPM (idle and full throttle) • Replace the fuel filter/water separator canister.
Every 2000 hours or 2 years	• Replace moving hoses. • Replace safety switches. • Drain/flush the fuel tank. • Drain/flush the hydraulic tank. • Drain/flush the cooling system.

Important Refer to your engine operator's manual for additional maintenance procedures.

Caution

If you leave the key in the ignition switch, someone could accidently start the engine and seriously injure you or other bystanders.

Remove the key from the ignition and disconnect the wire from the spark plug before you do any maintenance. Set the wire aside so that it does not accidentally contact the spark plug.

Daily Maintenance Checklist

Duplicate this page for routine use.

Maintenance Check Item	For the week of:						
	Mon.	Tues.	Wed.	Thurs.	Fri.	Sat.	Sun.
Check the safety interlock operation.							
Check the instrument operation.							
Check the brake operation.							
Check the fuel filter/water separator.							
Check the fuel level.							
Check the engine oil level.							
Clean the screen and radiator.							
Inspect the air filter.							
Check for unusual engine noises.							
Check the hydraulic hoses for damage.							
Check for fluid leaks.							
Check the tire pressure.							
Check the reel-to-bedknife adjustment.							
Check the height-of-cut adjustment.							
Lubricate all grease fittings.[1]							
Lubricate the traction and brake linkage.							
Touch up damaged paint.							

[1]Immediately after **every** washing, regardless of the interval listed

Notation for Areas of Concern

Inspection performed by:		
Item	**Date**	**Information**
1		
2		
3		
4		
5		
6		
7		
8		
9		
10		
11		
12		
13		

Lubrication

The traction unit has grease fittings that must be lubricated regularly with No. 2 General Purpose Lithium Base Grease. If the machine is operated under normal conditions, lubricate all bearings and bushings after every 50 hours of operation. Lubricate fittings immediately **after every** washing, regardless of the interval listed.

The following traction unit bearings and bushings must be lubricated:

- Rear wheel hub (1)
- Castor bearing (1)
- Steering cylinder (2) (Fig. 32)
- Lift arms (3) (Fig. 33)
- Traction pedal pivot (1) (Fig. 34)

1. Wipe the grease fitting clean so foreign matter cannot be forced into the bearing or bushing.
2. Pump grease into the bearing or bushing.
3. Wipe up excess grease.
4. Apply grease to the reel motor spline shaft and onto the lift arm when the cutting unit is removed for service.
5. Apply a few drops of SAE 30 engine oil or spray lubricant (WD 40) daily to all pivot points after cleaning.

Note: Refer to the Cutting Unit Operator's Manual for cutting unit lubrication requirements.

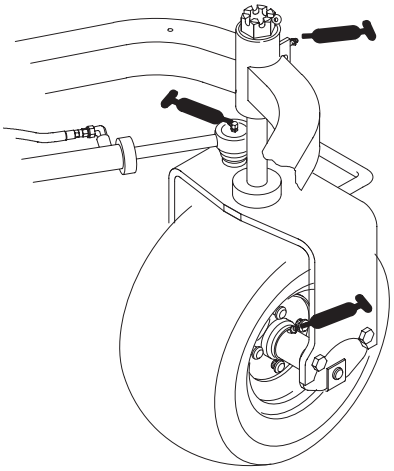

Figure 32

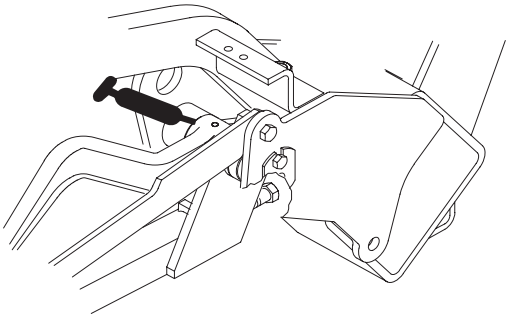

Figure 33

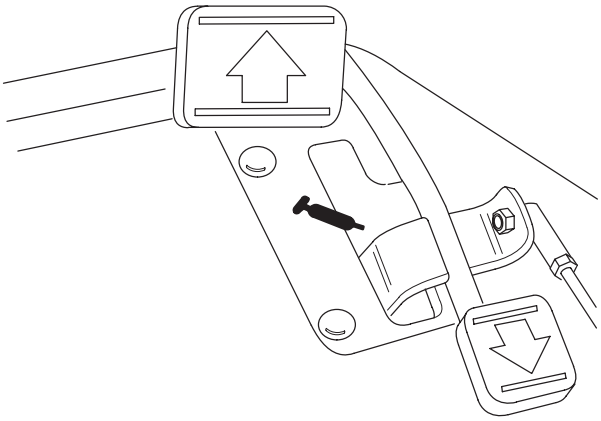

Figure 34

Air Cleaner

Service Interval/Specification

Check the air cleaner body for damage which could possibly cause an air leak. Replace a damaged air cleaner body.

Service the air cleaner filter every 200 hours.

Note: Service the air cleaner more frequently if operating conditions are extremely dusty or sandy.

Removing the Filter Element

1. Release the latches securing the air cleaner cover to the air cleaner body (Fig. 35). Separate the cover from the body. Clean the inside of the air cleaner cover.

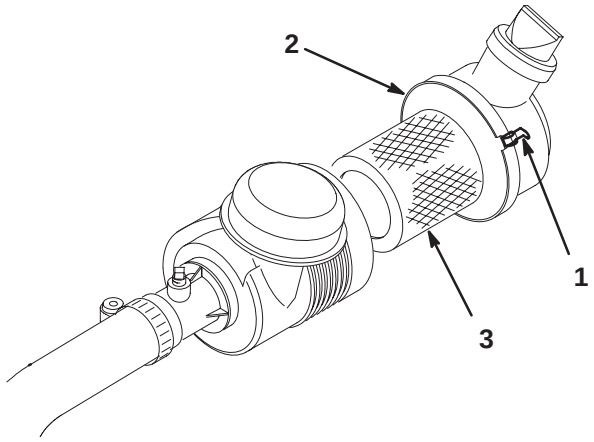

Figure 35

1. Air cleaner latches
2. Dust cap
3. Filter

2. Gently slide the filter out of the air cleaner body to reduce the amount of dust dislodged. Avoid knocking the filter against the air cleaner body.
3. Inspect the filter and discard it if it is damaged. Do not wash or reuse a damaged filter.

Cleaning the Filter Element

1. Washing method:
   A. Prepare a solution of filter cleaner and water and soak the filter element about 15 minutes; refer to the directions on the filter cleaner carton for complete information.
   B. After soaking the filter for 15 minutes, rinse it with clear water. The maximum water pressure must not exceed 40 psi to prevent damage to the filter element. Rinse the filter from clean side to dirty to side.
2. Compressed air method:
   A. Blow the compressed air from inside to the outside of the dry filter element. Keep the air hose nozzle at least 2 in. (6 cm) from the filter and move the nozzle up and down while rotating the filter element.

   Important To prevent damage to the filter element, do not exceed 100 psi air pressure.

   B. Inspect for holes and tears by looking through the filter toward a bright light.

Installing the Filter Element

1. Inspect the new filter for shipping damage. Check the sealing end of the filter.

Important Do not install a damaged filter.

2. Insert the new filter properly into the air cleaner body. Make sure the filter is sealed properly by applying pressure to the outer rim of the filter when installing. Do not press on the flexible center of filter.
3. Reinstall the cover and secure the latches (Fig. 35).

Cleaning the Radiator Screen

To prevent the system from overheating, the radiator screen and radiator must be kept clean. Check and clean the screen and radiator daily or, if necessary, hourly. Clean these components more frequently in dusty, dirty conditions.

1. Remove the radiator screen (Fig. 36).
2. Working from the fan side of the radiator, blow out the radiator with compressed air.

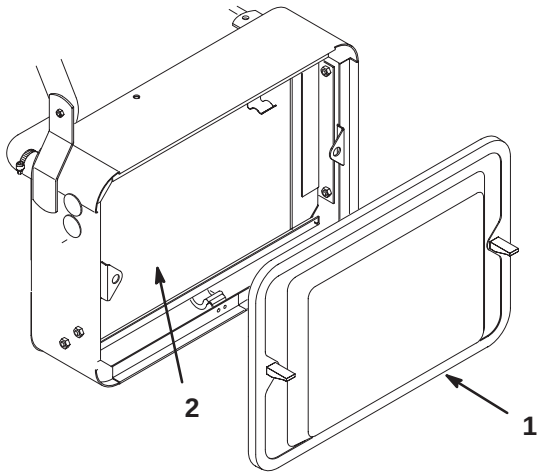

Figure 36

1. Radiator screen
2. Radiator

3. Clean the screen and reinstall it.

Engine Oil

Service Interval/Specification

Change the oil:

- After the first 8 operating hours
- After every 50 operating hours

Note: Change the oil more frequently when operating conditions are extremely dusty or sandy.

Changing Oil and Filter

1. Remove the drain plug and let the oil flow into the drain pan. When the oil stops, install the drain plug.
2. Remove the oil filter. Apply a light coat of clean oil to the new filter gasket.
3. Screw the filter on by hand until the gasket contacts the filter adapter, then tighten 1/2 to 3/4 turn further. **Do not overtighten.**
4. Add oil to the crankcase; refer to Checking the Engine Oil, page 17.
5. Dispose of the oil properly.

Fuel Filter/Water Separator

Service Interval/Specification

Replace the filter element after every 800 operating hours.

Servicing the Filter

1. Clean the area where the filter canister mounts (Fig. 37).
2. Disconnect the sensor wire and remove the drain plug.
3. Remove the filter canister and clean the mounting surface.

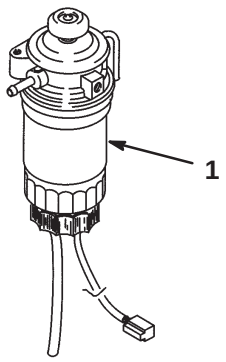

Figure 37

1. Fuel filter with separator

4. Lubricate the gasket on the filter canister with clean oil.
5. Install the filter canister by hand until the gasket contacts the mounting surface, then rotate the canister an additional 1/3 turn.
6. Install the drain plug with a new o-ring. Connect the sensor wire.
7. Push the primer button until resistance is felt.
8. Start the engine and check for leaks.

Adjusting the Throttle Control

Proper throttle operation is dependent upon proper adjustment of the throttle control. Ensure the throttle control is operating properly.

1. Move the remote throttle control lever to the Slow position (Fig. 38).

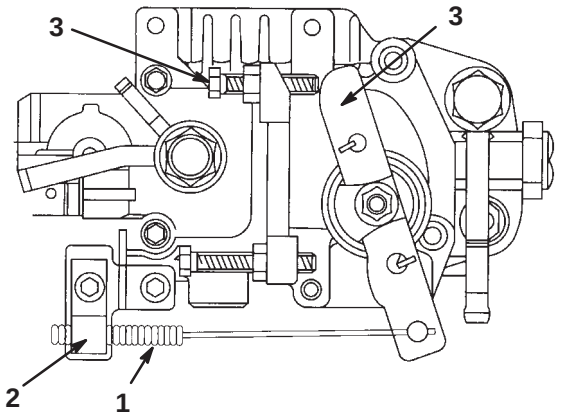

Figure 38

1. Throttle cable
2. Cable clamp
3. Speed control lever
4. Idle speed screw

2. Loosen the cable clamp screw securing the cable to the engine (Fig. 38).
3. Move the cable until the speed control lever contacts the idle speed screw (Fig. 38).
4. Tighten the cable clamp screw and check the engine RPM setting.

Adjusting the Idle Speed

1. Move the remote throttle control lever to the Slow position (Fig. 38).
2. Loosen the locknut on the idle speed screw (Fig. 38).
3. Adjust the idle speed screw to obtain 1500 RPM.
4. Tighten the locknut.

Hydraulic Oil

Service Interval/Specification

Change the hydraulic oil after every 800 operating hours.

If the oil becomes contaminated, contact your local Toro distributor because the system must be flushed. Contaminated oil looks milky or black when compared to clean oil.

Change the filter:

- After the first 50 operating hours
- After every 800 operating hours

Changing the Hydraulic Oil and Filter

1. Clean the area around the filter mounting area (Fig. 39). Place a drain pan under the filter and remove the filter.

Note: If the oil is not going to be drained, disconnect and plug the hydraulic line going to the filter.

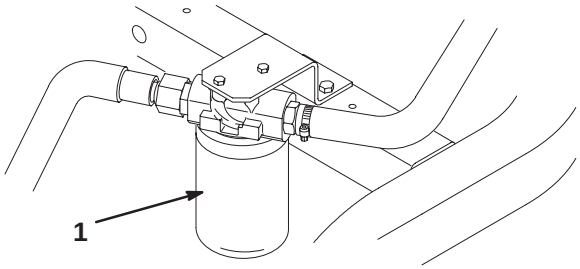

Figure 39

1. Hydraulic filter

2. Fill the replacement filter with the appropriate hydraulic fluid, lubricate the sealing gasket, and hand turn it until the gasket contacts the filter head. Then tighten 3/4 turn further. The filter should now be sealed.
3. Fill the hydraulic reservoir with approximately 5.5 gallons of hydraulic oil; refer to Servicing Hydraulic System Fluid, page 18.
4. Start the machine and run it at idle for 3 to 5 minutes to circulate the fluid and remove any air trapped in the system. Stop the machine and recheck the fluid level.
5. Dispose of the oil properly.

Checking the Hydraulic Lines and Hoses

Inspect the hydraulic lines and hoses daily for leaks, kinked lines, loose mounting supports, wear, loose fittings, weather deterioration and chemical deterioration. Make all necessary repairs before operating.

Warning

Hydraulic fluid escaping under pressure can penetrate skin and cause injury.

- **Make sure all hydraulic fluid hoses and lines are in good condition and all hydraulic connections and fittings are tight before applying pressure to the hydraulic system.**
- **Keep your body and hands away from pin hole leaks or nozzles that eject high pressure hydraulic fluid.**
- **Use cardboard or paper to find hydraulic leaks.**
- **Safely relieve all pressure in the hydraulic system before performing any work on the hydraulic system.**
- **Get immediate medical help if fluid is injected into skin.**

Adjusting the Brakes

A brake adjustment rod is located on each side of the machine so the brakes can be equally adjusted. Adjust the brakes as follows:

1. Drive the machine and depress the brake pedal; both wheels should lock equally.

Caution

Testing the brakes in a confined area where others are present could cause injury.

Always check the brakes in a wide, open-spaced, flat area which is free of other persons and obstructions before and after adjustment.

2. Loosen the jam nut and adjust the clevis accordingly (Fig. 40).

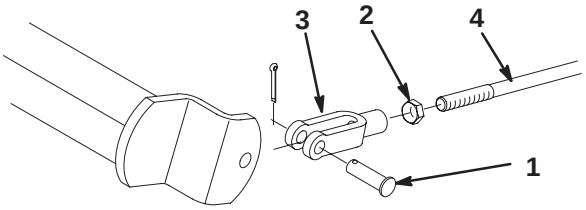

Figure 40

1. Clevis pin and cotter pin
2. Jam nut
3. Clevis
4. Brake shaft

3. Assemble the clevis to the brake shaft (Fig. 40).
4. Check the amount of free travel of the brake pedal when the adjustment is completed. There should be 1/2 to 1 in. (13 to 25 mm) travel before the brake shoes make contact with the brake drums. Readjust, if necessary, to achieve this setting.
5. Drive the machine and depress the brake pedal; both brakes should lock equally. Adjust if necessary.
6. It is recommended that the brakes be burnished annually; refer to Break-In Period, page 22.

Adjusting the Transmission for Neutral

If the machine creeps when the traction control pedal is in the neutral position, the neutral return mechanism must be adjusted.

1. Block up under the frame so that one of the front wheels is off of the floor.

Note: If machine is equipped with a 3 wheel drive kit, also raise and block rear wheel.

2. Start the engine, move the throttle to Slow, and check the front wheel that is off of the floor; it must not be rotating.
3. If the wheel is rotating, stop the engine and proceed as follows:
   A. Loosen both jam nuts securing the traction control cable to the bulkhead on the hydrostat (Fig. 41). Make sure the jam nuts are loosened equally and sufficiently to allow adjustment.
   B. Loosen the nut securing the eccentric to the top of the hydrostat (Fig. 41).
   C. Move the functional control lever to Neutral and the throttle to Slow. Start the engine.
   D. Rotate the eccentric until creep does not occur in either direction. When the wheel stops rotating, tighten the nut locking the eccentric and the adjustment (Fig. 41). Verify the adjustment with the throttle in the Slow and Fast position.
   E. From each side of the bulkhead, tighten the locknuts **evenly**, securing the traction cable to the bulkhead (Fig. 41). Do not twist the cable.

Note: If cable tension exists when the functional control lever is in neutral, the machine may creep when the lever is moved to the Mow or Transport position.

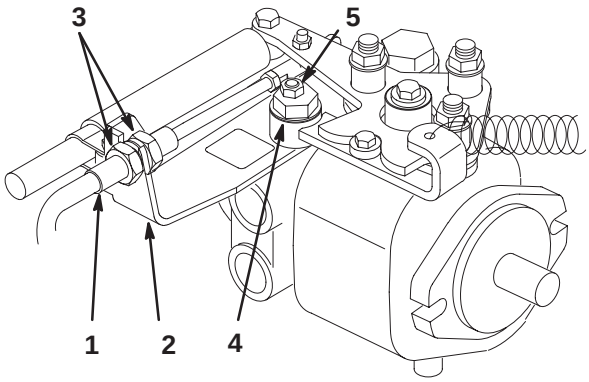

Figure 41

1. Traction cable
2. Bulkhead
3. Jam nuts
4. Eccentric
5. Locknut

Adjusting the Transport Speed

The traction pedal is adjusted for maximum transport speed at the factory, but an adjustment may be required if the pedal reaches full stroke before it contacts the pedal stop, or if a decrease in transport speed is desired.

1. Press down on the traction pedal. If the pedal contacts the stop (Fig. 42) before tension is felt on the cable, an adjustment is required:
   A. Loosen flangehead locknuts securing the pedal stop to the floor plate (Fig. 42).
   B. Adjust the pedal stop so it contacts the pedal rod and tighten the nuts.

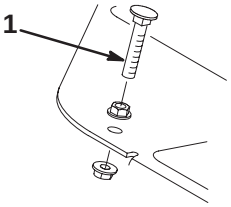

Figure 42

1. Pedal stop

Adjusting the Mowing Speed

The machine is adjusted at the factory, but speed may be varied if desired.

1. Loosen the jam nut on the trunion capscrew (Fig. 43).
2. Loosen the nut securing the lock and mow brackets on the pedal pivot.

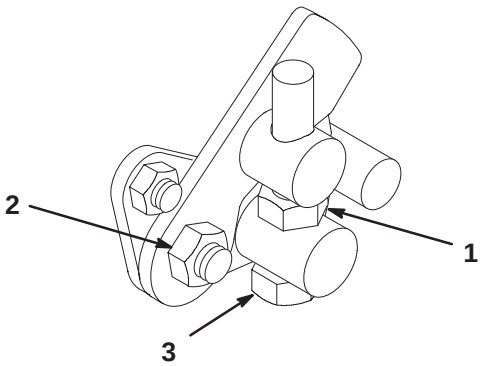

Figure 43

1. Jam nut
2. Nut
3. Trunion capscrew

3. Rotate the trunion capscrew clockwise to reduce the mowing speed and counterclockwise to increase the mowing speed.
4. Tighten the jam nut on the trunion capscrew and the nut on the pedal pivot to lock the adjustment (Fig. 43). Check the adjustment and adjust as required.

Adjusting the Cutting Unit Lift/Drop

The cutting unit lift/drop circuit is equipped with a flow control valve (Fig. 44). This valve is preset at the factory at approximately 3 turns open, but an adjustment may be required to compensate for differences in hydraulic oil temperatures, mowing speeds, etc. If an adjustment is required, proceed as follows:

Note: Allow the hydraulic oil to reach full operating temperature before adjusting the flow control valve.

1. Raise the seat and locate the flow control valve (Fig. 44) mounted to the hydraulic cylinder for the center pull frame.

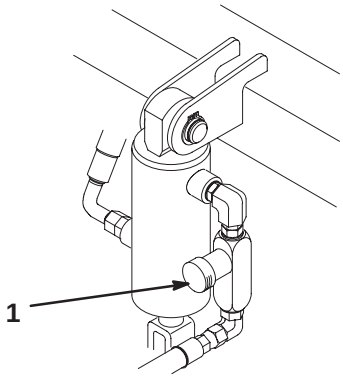

Figure 44

1. Flow control valve

2. Loosen the set screw on the adjusting knob on the flow control.
3. Rotate the knob 1/4 turn counterclockwise if the center cutting unit is dropping too late or 1/4 turn clockwise if the center cutting unit is dropping too early.
4. After the desired setting has been achieved, tighten the set screw.

Adjusting the Belt

Make sure the belt is properly tensioned to ensure proper operation of the machine and prevent unnecessary wear. On new belts, check the tension after 8 operating hours.

The engine belt (Fig. 45) should be tensioned so it deflects 3/16 in. (5 mm) with a 2–3 lb. (1 kg) load applied midway between the crankshaft and the alternator pulley.

1. Loosen the bolts securing the alternator to the engine and adjusting strap.

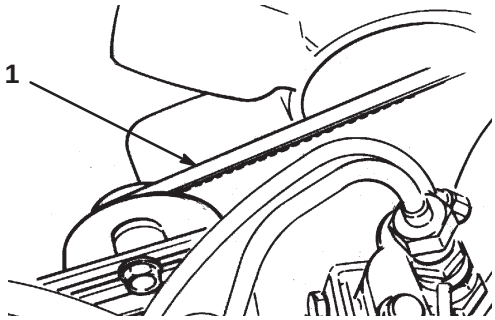

Figure 45

1. Engine belt

2. Adjust the belt to the proper tension and tighten the bolts.

Servicing the Battery

Warning

CALIFORNIA

Proposition 65 Warning

Battery posts, terminals, and related accessories contain lead and lead compounds, chemicals known to the State of California to cause cancer and reproductive harm. *Wash hands after handling.*

Voltage: 12 v, 530 Cold Cranking Amps

The battery electrolyte level must be properly maintained and the top of the battery kept clean. lf the machine is stored in a location where temperatures are extremely high, the battery will run down more rapidly than if the machine is stored in a location where temperatures are cool.

Check the electrolyte level every 25 operating hours or, if the machine is in storage, every 30 days.

Maintain the cell level with distilled or demineralized water. Do not fill the cells above the bottom of the split ring inside each cell. Install the filler caps with the vents pointing to the rear (toward the fuel tank).

Danger

Battery electrolyte contains sulfuric acid which is a deadly poison and causes severe burns.

- **Do not drink electrolyte and avoid contact with skin, eyes or clothing. Wear safety glasses to shield your eyes and rubber gloves to protect your hands.**
- **Fill the battery where clean water is always available for flushing the skin.**

Keep the top of the battery clean by washing it periodically with a brush dipped in ammonia or bicarbonate of soda solution. Flush the top surface with water after cleaning it. Do not remove the fill caps while cleaning the battery.

The battery cables must be tight on the terminals to provide good electrical contact.

If corrosion occurs at the terminals, disconnect the cables, negative (–) cable first, and scrape the clamps and terminals separately. Reconnect the cables, positive (+) cable first, and coat the terminals with petroleum jelly.

Warning

Battery terminals or metal tools could short against metal tractor components causing sparks. Sparks can cause the battery gasses to explode, resulting in personal injury.

- **When removing or installing the battery, do not allow the battery terminals to touch any metal parts of the tractor.**
- **Do not allow metal tools to short between the battery terminals and metal parts of the tractor.**

Warning

Incorrect battery cable routing could damage the tractor and cables causing sparks. Sparks can cause the battery gasses to explode, resulting in personal injury.

- **Always *disconnect* the negative (black) battery cable before disconnecting the positive (red) cable.**
- **Always *connect* the positive (red) battery cable before connecting the negative (black) cable.**

Storing the Battery

If the machine will be stored more than 30 days, remove the battery and charge it fully. Either store it on the shelf on the machine. Leave the cables disconnected if it is stored on the machine. Store the battery in a cool atmosphere to avoid quick deterioration of the charge in the battery. To prevent the battery from freezing, make sure it is fully charged. The specific gravity of a fully charged battery is 1.265–1.299.

Fuses

The fuses in the machine's electrical system are located under the seat (Fig. 46).

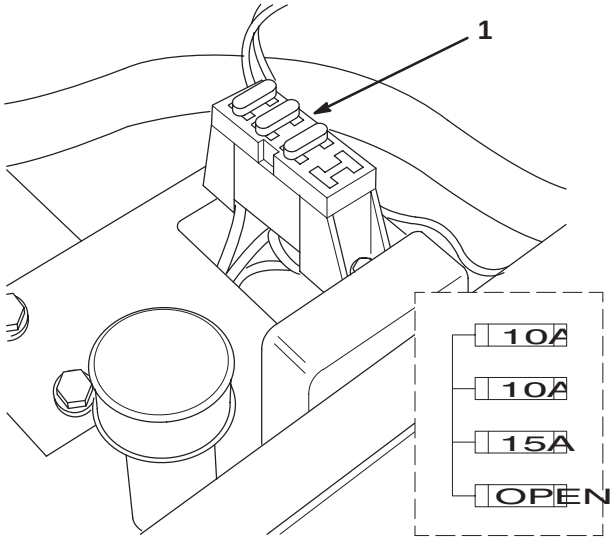

Figure 46

1. Fuses

Electrical Schematic

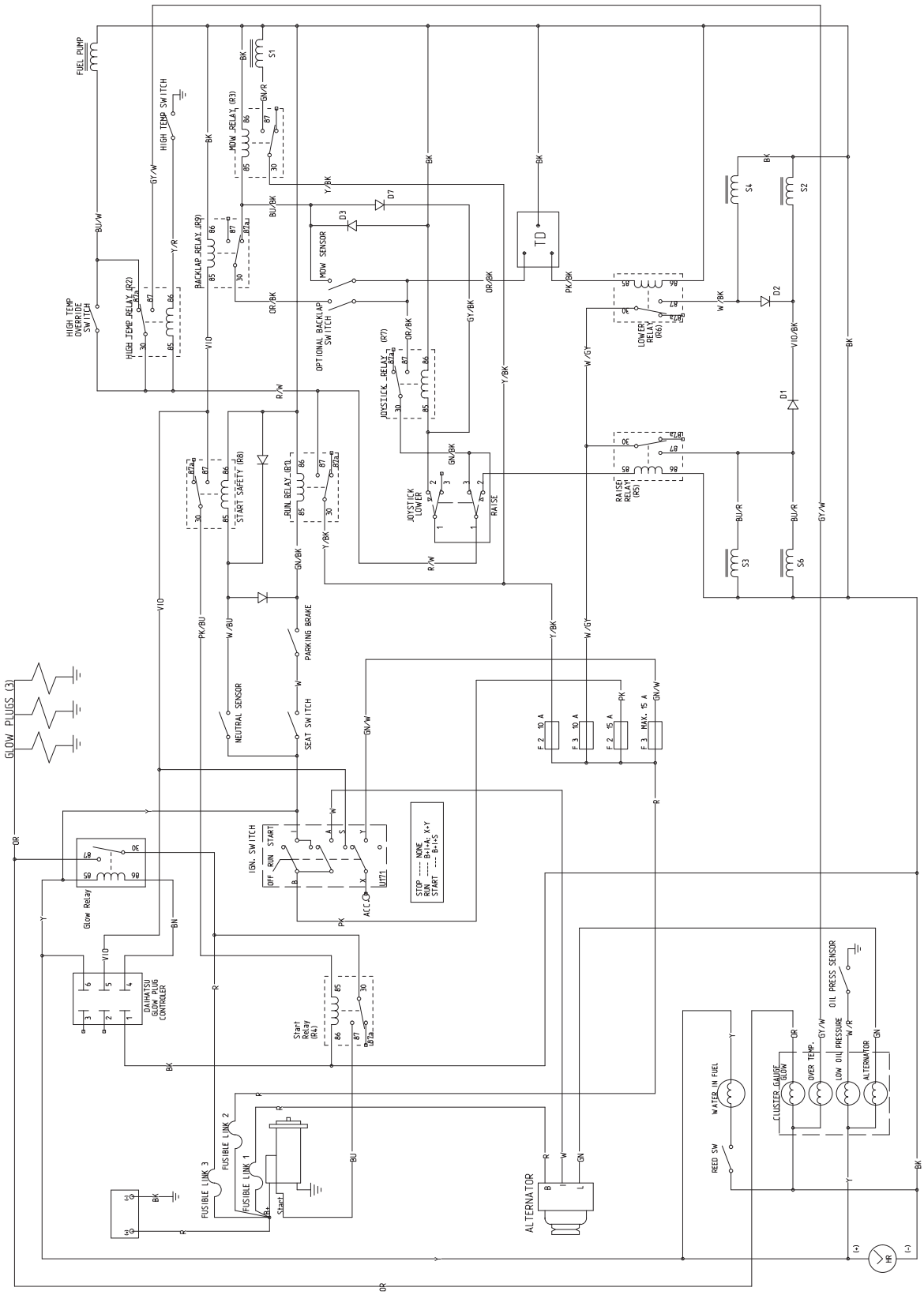

Hydraulic Schematic

DISPLACEMENT, FLOW RATE, AND PRESSURE CHART					
COMPONENT	DISPLACEMENT		PRESSURE	FLOW RATE	
	in^3/rev	cm^3/rev	lbs/in^2 BARS	GPM	LPM
P1	.58	9.5	- -	6.9	26.1
P2	.31	5.1	- -	3.7	13.9
P3	1.24	20.3	- -	14.8	55.8
M1	.73	12.0	- -	-	-
M2	.73	12.0	- -	-	-
M3	.73	12.0	- -	-	-
M4	10.3	168.8	- -	-	-
M5	10.3	168.8	- -	-	-
V1	4.88	80	- -	-	-
R1	-	-	2400 166	-	-
R2	-	-	400 21	-	-
R4	-	-	100 7	-	-
R5	-	-	1150 79	-	-

✱✱✱ ✱FLOW RATE CALCULATED AT 2800 RPM AND 98% EFFICIENCY

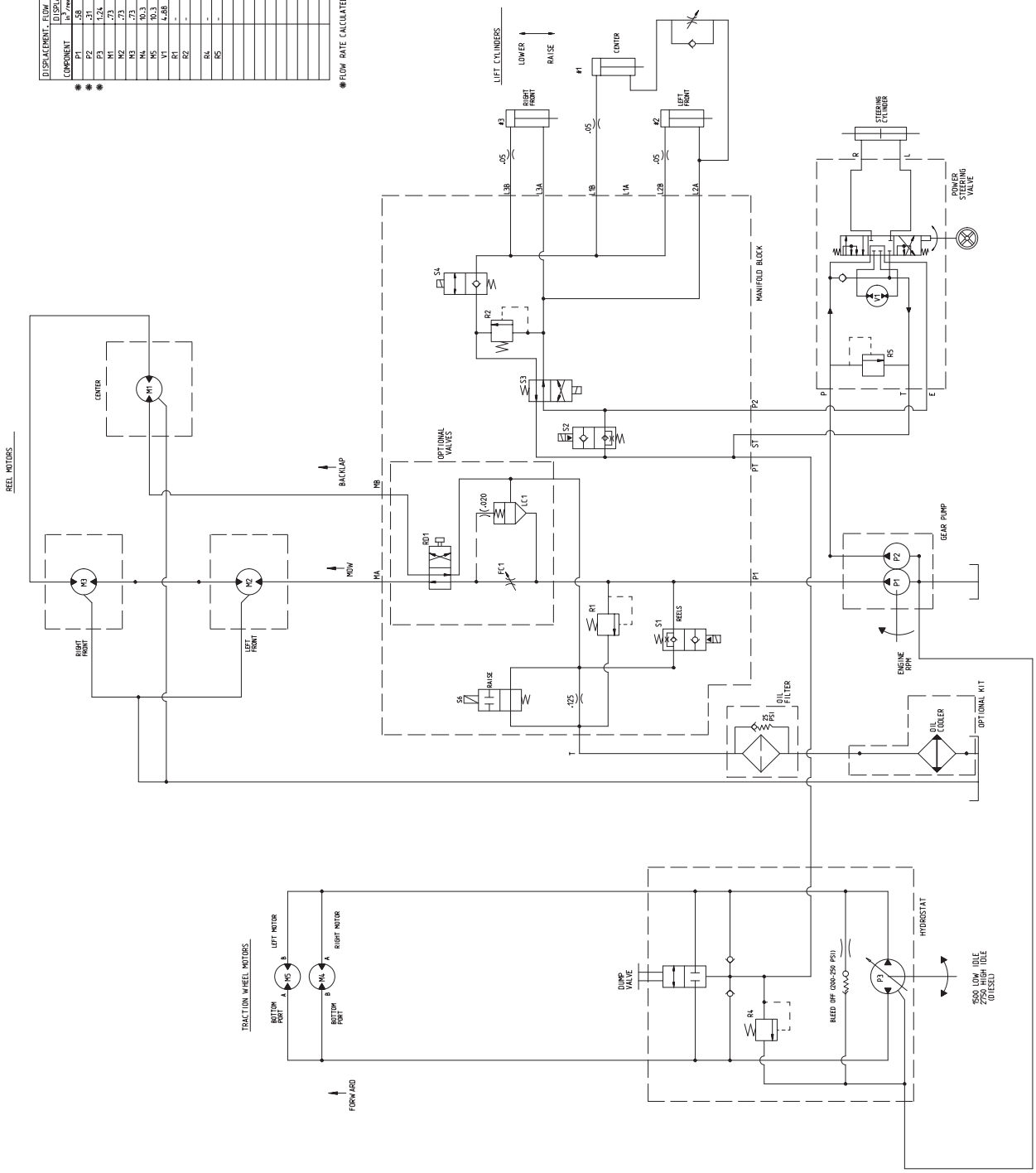

The Toro General Commercial Products Warranty

A Two-Year Limited Warranty

Conditions and Products Covered

The Toro Company and its affiliate, Toro Warranty Company, pursuant to an agreement between them, jointly warrant your Toro Commercial Product ("Product") to be free from defects in materials or workmanship for two years or 1500 operational hours*, whichever occurs first. Where a warrantable condition exists, we will repair the Product at no cost to you including diagnosis, labor, parts, and transportation. This warranty begins on the date the Product is delivered to the original retail purchaser.

* Product equipped with hour meter

Instructions for Obtaining Warranty Service

You are responsible for notifying the Commercial Products Distributor or Authorized Commercial Products Dealer from whom you purchased the Product as soon as you believe a warrantable condition exists.

If you need help locating a Commercial Products Distributor or Authorized Dealer, or if you have questions regarding your warranty rights or responsibilities, you may contact us at:

Toro Commercial Products Service Department
Toro Warranty Company
8111 Lyndale Avenue South
Bloomington, MN 55420-1196
952-888-8801 or 800-982-2740
E-mail: commercial.service@toro.com

Owner Responsibilities

As the Product owner, you are responsible for required maintenance and adjustments stated in your operator's manual. Failure to perform required maintenance and adjustments can be grounds for disallowing a warranty claim.

Items and Conditions Not Covered

Not all product failures or malfunctions that occur during the warranty period are defects in materials or workmanship. This express warranty does not cover the following:

- Product failures which result from the use of non-Toro replacement parts, or from installation and use of add-on, modified, or unapproved accessories
- Product failures which result from failure to perform required maintenance and/or adjustments
- Product failures which result from operating the Product in an abusive, negligent or reckless manner
- Parts subject to consumption through use unless found to be defective. Examples of parts which are consumed, or used up, during normal Product operation include, but are not limited to, blades, reels, bedknives, tines, spark plugs, castor wheels, tires, filters, belts, etc.
- Failures caused by outside influence. Items considered to be outside influence include, but are not limited to, weather, storage practices, contamination, use of unapproved coolants, lubricants, additives, or chemicals, etc.
- Normal "wear and tear" items. Normal "wear and tear" includes, but is not limited to, damage to seats due to wear or abrasion, worn painted surfaces, scratched decals or windows, etc.

Parts

Parts scheduled for replacement as required maintenance are warranted for the period of time up to the scheduled replacement time for that part.

Parts replaced under this warranty become the property of Toro. Toro will make the final decision whether to repair any existing part or assembly or replace it. Toro may use factory remanufactured parts rather than new parts for some warranty repairs.

General Conditions

Repair by an Authorized Toro Distributor or Dealer is your sole remedy under this warranty.

Neither The Toro Company nor Toro Warranty Company is liable for indirect, incidental or consequential damages in connection with the use of the Toro Products covered by this warranty, including any cost or expense of providing substitute equipment or service during reasonable periods of malfunction or non-use pending completion of repairs under this warranty. Except for the Emissions warranty referenced below, if applicable, there is no other express warranty. All implied warranties of merchantability and fitness for use are limited to the duration of this express warranty.

Some states do not allow exclusions of incidental or consequential damages, or limitations on how long an implied warranty lasts, so the above exclusions and limitations may not apply to you.

This warranty gives you specific legal rights, and you may also have other rights which vary from state to state.

Note regarding engine warranty: The Emissions Control System on your Product may be covered by a separate warranty meeting requirements established by the U.S. Environmental Protection Agency (EPA) and/or the California Air Resources Board (CARB). The hour limitations set forth above do not apply to the Emissions Control System Warranty. Refer to the Engine Emission Control Warranty Statement printed in your operator's manual or contained in the engine manufacturer's documentation for details.

Countries Other than the United States or Canada

Customers who have purchased Toro products exported from the United States or Canada should contact their Toro Distributor (Dealer) to obtain guarantee policies for your country, province, or state. If for any reason you are dissatisfied with your Distributor's service or have difficulty obtaining guarantee information, contact the Toro importer. If all other remedies fail, you may contact us at Toro Warranty Company.

Part No. 374-0031 Rev. a