FORM NO. 3312-371

TORO®

MODEL NO. 30940 — 4000001 & UP

PARTS CATALOG

POWER BLOWER

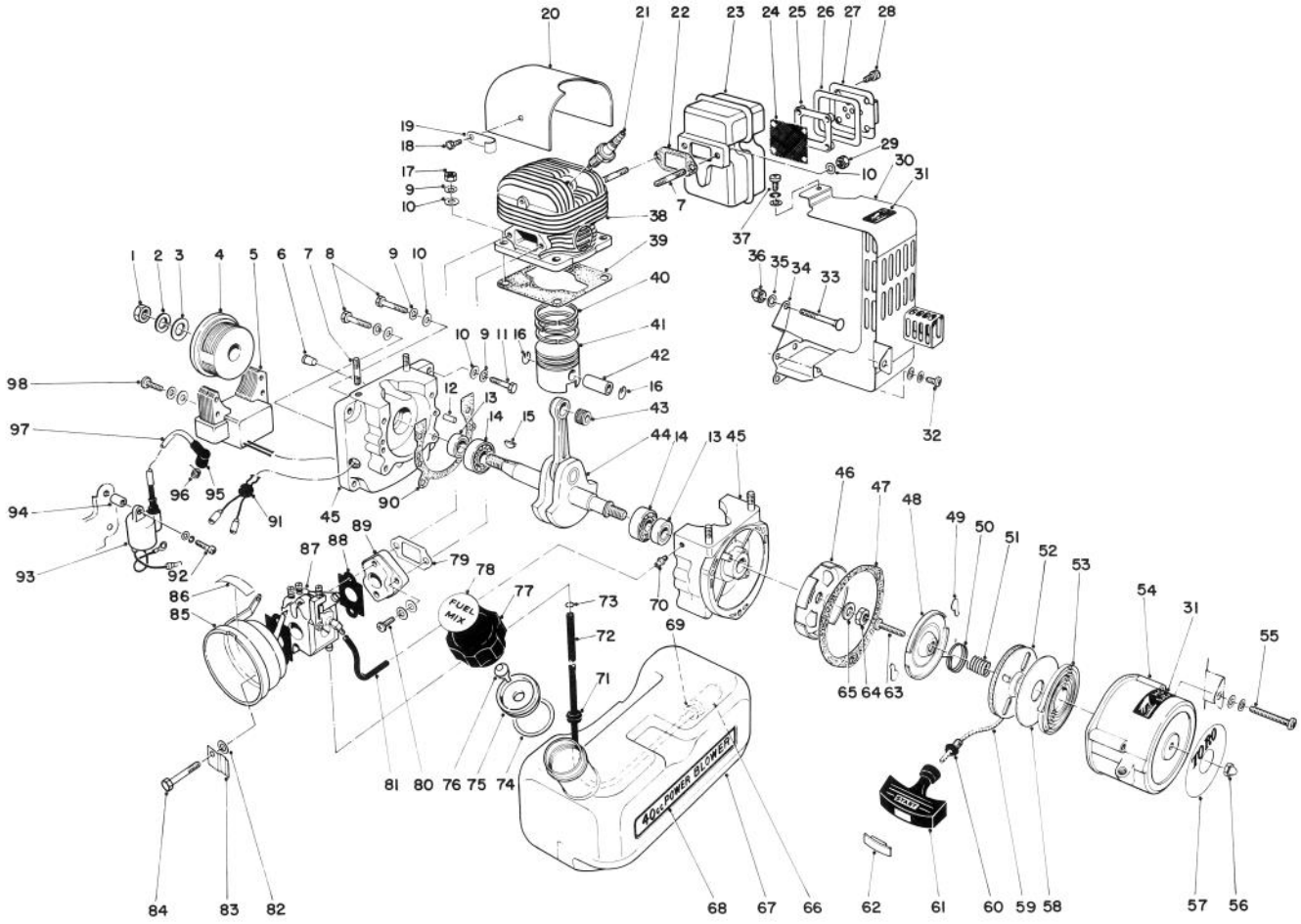

ENGINE ASSEMBLY

Ref. No.	Part No.	Description	No. Used
1	41-6120	Nut	1
2	41-6110	Spring Washer	1
3	41-6140	Washer	1
4	46-4440	Rotor	1
5	46-4450	C.D.I. Module	1
6	46-4400	Plug	1
7	47-6460	Stud Bolt	6
8	41-0370	Bolt	4
9	41-5500	Spring Washer	12
10	47-6480	Washer	14
11	41-4850	Bolt	4
12	41-0320	Knock Pin	2
13	41-0300	Oil Seal	2
14	41-5680	Ball Bearing	2
15	41-6160	Woodruff Key	1

Ref. No.	Part No.	Description	No. Used
16	41-0140	Circlip, Piston Pin	2
17	41-5360	Nut	4
18	41-4840	Bolt	2
19	41-2550	Clamp	1
20	41-0600	Cylinder Cover	1
21	41-2500	Spark Plug	1
22	46-5910	Gasket Muffler	1
23	46-5890	Muffler Assembly (Incl. Ref. #22-30, 35 & 7)	1
24	46-5900	Screen	1
25	47-6430	Seat Screen	1
26	47-6440	Packing Holder	1
27	47-6420	Holder Screen	1
28	47-6450	Screw	4
29	47-6470	Locknut	2

© The Toro Company — 1983

PRICE $1.00

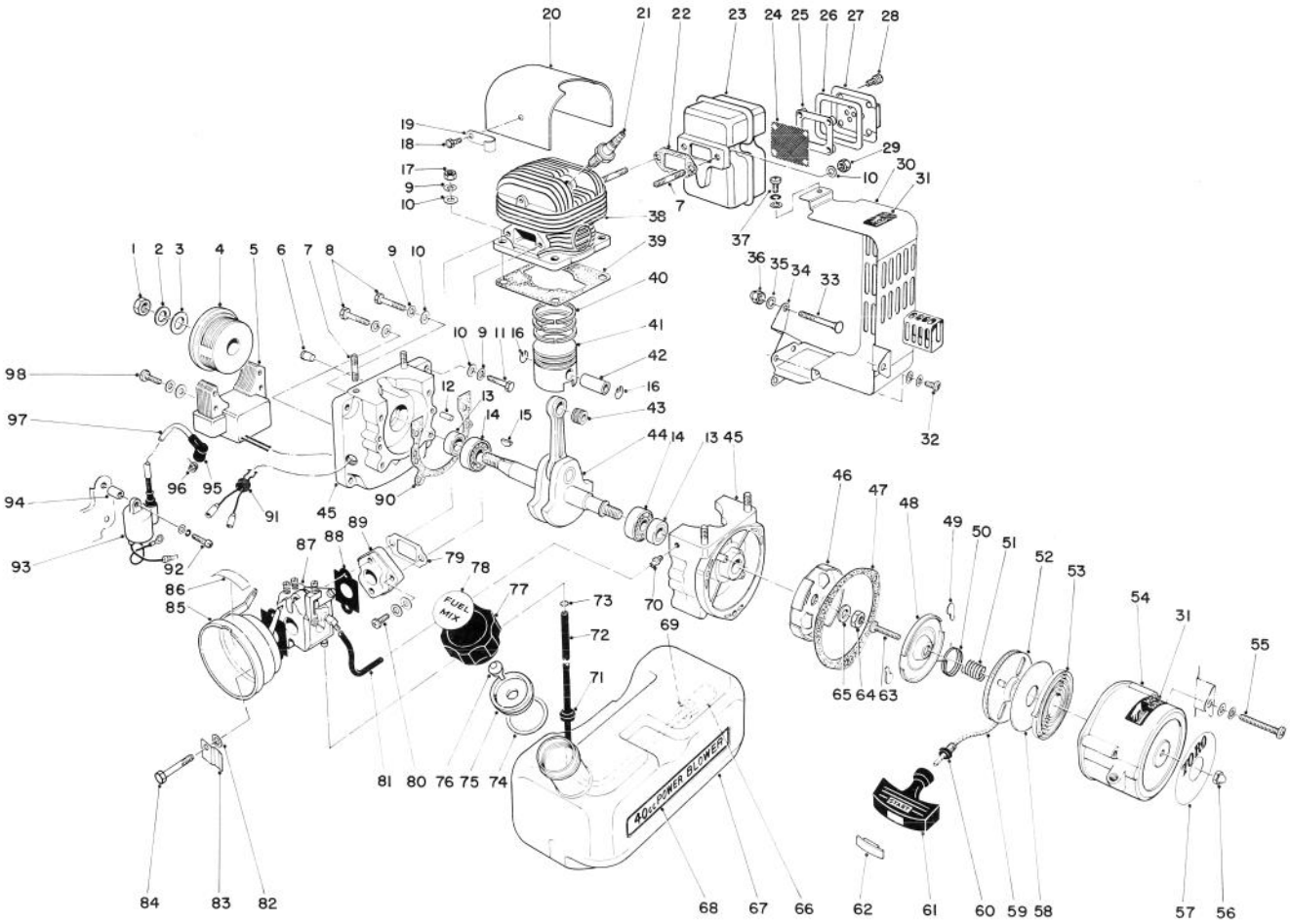

ENGINE ASSEMBLY (Continued)

Ref. No.	Part No.	Description	No. Used
30	46-4420	Muffler Cover	1
31	42-6210	Decal – Hot Surface	2
32	41-5210	Screw	2
33	41-3920	Bolt – Blowing Elbow	2
34	46-5920	Bracket – Muffler Cover	1
35	47-6370	Washer	2
36	41-3930	Capnut	2
37	43-9360	Screw	1
38	41-0460	Cylinder	1
39	41-0470	Packing Cylinder Base	1
40	41-0060	Piston Ring	3
41	41-0020	Piston	1
42	41-0110	Piston Pin	1
43	41-0080	Needle Bearing	1
44	41-0170	Crankshaft Assembly	1
45	41-0220	Crankcase Set	1
46	41-2880	Pawl Catcher	1
47	41-0430	Packing Starter Case	1
48	41-2890	Friction Plate	1
49	41-2970	Ratchet	2
50	41-3140	Ratchet Spring	1
51	41-3130	Spring	1
52	41-2930	Recoil Drum	1

Ref. No.	Part No.	Description	No. Used
53	41-2990	Rewind Spring	1
54	41-3120	Starter Case	1
55	41-5270	Screw	3
56	41-3180	Cap Nut	1
57	44-7470	Decal – Toro	1
58	41-3160	Side Plate, Starter	1
59	41-3030	Starter Rope	1
60	46-3870	Rope Guide	1
61	41-3070	Starter Handle	1
62	41-3210	Cap, Starter Handle	1
63	41-3170	Screw	1
64	41-6180	Nut	1
65	41-2750	Washer	1
66	46-4280	Fuel Strainer	1
67	41-1550	Fuel Tank	1
68	41-5800	Decal – 40cc	1
69	41-5490	Washer	1
70	41-1360	Connector	1
71	41-1890	Grommet	1
72	41-1800	Fuel Pipe	1
73	46-3950	Clip Fuel Pipe	1
74	46-4520	Gasket, Fuel Tank	1
75	46-4510	Holder, Check Valve	1

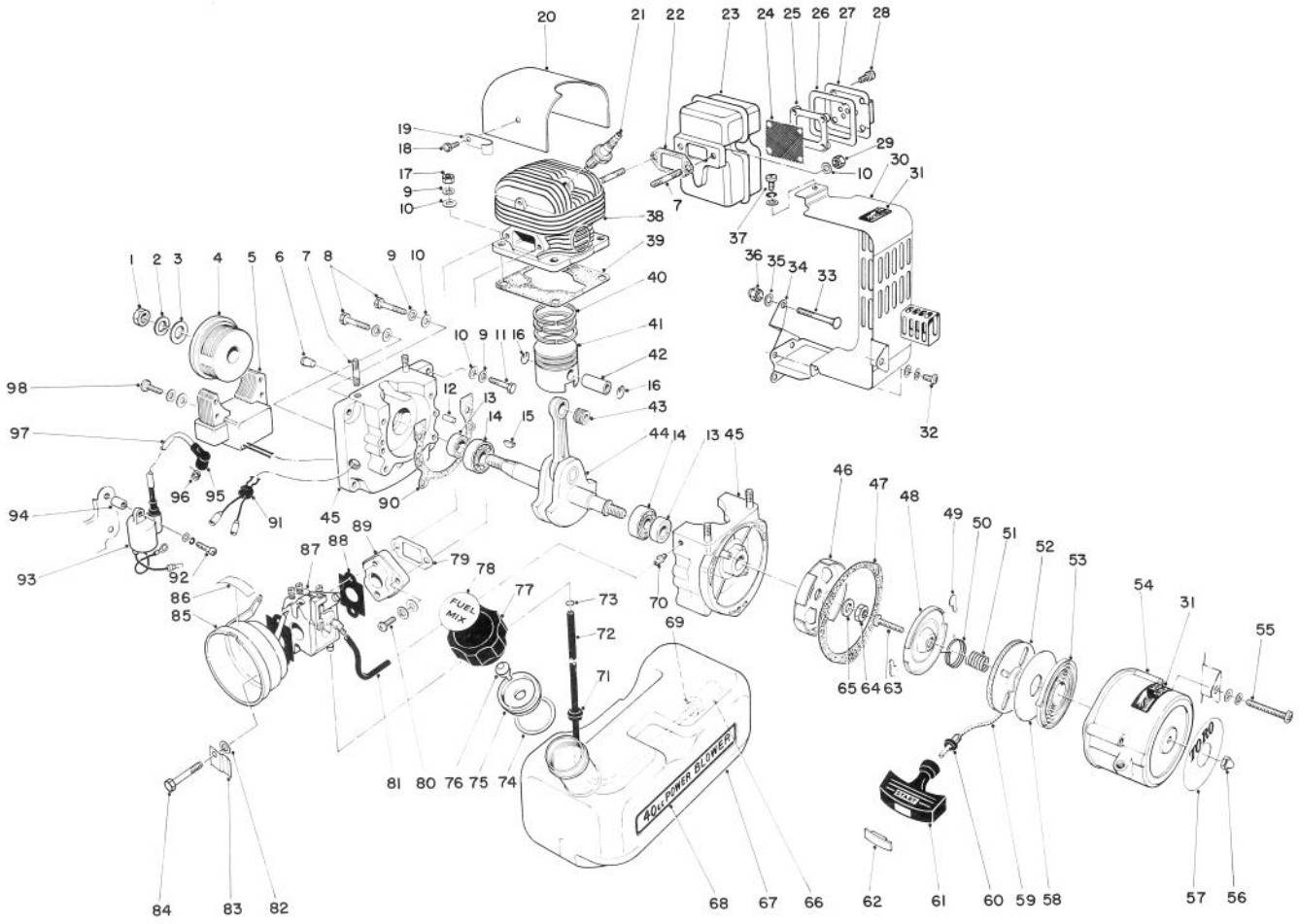

ENGINE ASSEMBLY (Continued)

Ref. No.	Part No.	Description	No. Used
76	41-1680	Check Valve	1
77	46-4290	Cap, Fuel Tank	1
78	41-4730	Decal, Fuel Mix	1
79	46-4480	Gasket	1
80	41-5300	Screw	2
81	41-1370	Pipe	1
82†		Washer	1
83	11-3139	Choke Clip/Washer (Incl. Ref. #82)	1
84	41-1310	Bolt	2
85	46-4490	Cleaner Case	1
86	41-4760	Decal, Caution	1
87	41-0660	Carburetor Assembly	1

Ref. No.	Part No.	Description	No. Used
88	41-1250	Gasket	2
89	41-1170	Insulator	1
90	41-0340	Packing, Crankcase	1
91	46-4460	Grommet	1
92	41-5180	Screw	2
93	46-4630	Ignition Coil	1
94	46-4540	Spacer	2
95	41-2520	Cap, Spark Plug	1
96	41-2510	Coil Spring, Spark Plug Cap	1
97	41-2280	Sleeve	1
98	41-5240	Screw	2
*	41-2820	Recoil Starter Assembly	1
*	46-4500	Cap Assembly Fuel Tank	1

*Not Illustrated

†Available in Kit 11-3139. See Ref. #83.

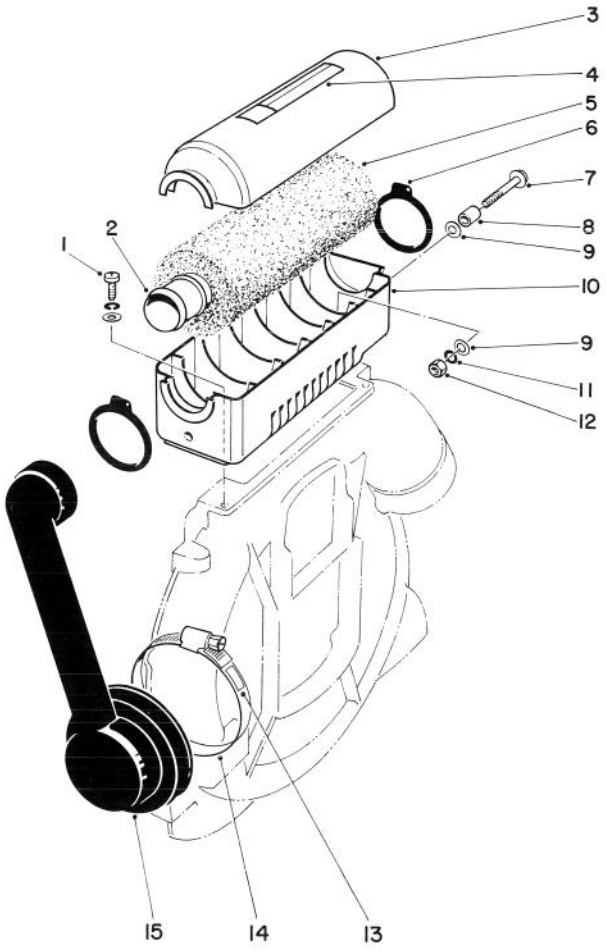

HEAVY DUTY AIR FILTER ASSEMBLY

Ref. No.	Part No.	Description	No. Used
1	41-5280	Screw	3
2	47-6330	Holder – Air Filter	1
3	47-6300	Case – Upper	1
4	44-7450	Decal – Warning	1
5	47-6320	Air Filter	1
6	47-6310	Clamp	2
7	47-6360	Bolt	2
8	47-6400	Spacer	1

Ref. No.	Part No.	Description	No. Used
9	47-6370	Washer	4
10	47-6350	Case – Lower	1
11	47-6380	Spring Washer	2
12	47-6390	Nut	2
13	49-2980	Decal – Choke	1
14	47-6410	Clamp	1
15	47-6340	Adapter – Intake	1

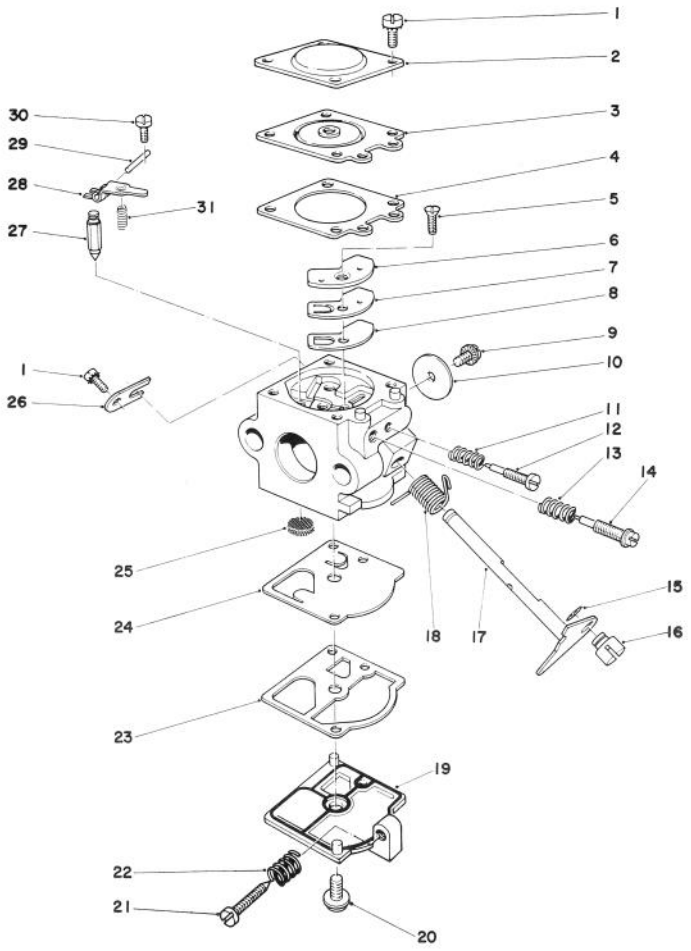

CARBURETOR ASSEMBLY

Ref. No.	Part No.	Description	No. Used
1	41-1070	Screw	5
2	41-1060	Cover, Metering Diaphragm	1
3	41-1050	Diaphragm, Metering	1
4	41-1040	Gasket, Metering Diaphragm	1
5	41-1110	Screw, Circuit Plate	1
6	41-1100	Plate, Circuit	1
7	41-1090	Diaphragm, Circuit Plate	1
8	41-1080	Gasket, Circuit Plate	1
9	41-0730	Screw, Throttle Valve	1
10	41-0740	Valve, Throttle	1
11	41-0860	Spring, Idle Needle	1
12	41-0800	Needle, Idle	1
13	41-0820	Spring, High Speed Needle	1
14	41-0830	Needle, High Speed	1
15	41-0950	Clip	1
16	41-1120	Swivel	1
17	41-0770	Shaft Assembly, Throttle	1

Ref. No.	Part No.	Description	No. Used
18	41-0720	Spring, Throttle Return	1
19	41-0890	Cover, Fuel Pump	1
20	41-0700	Screw, Pump Cover	1
21	41-0990	Screw, Idle Adjustment	1
22	41-0970	Spring, Idle Screw	1
23	41-0920	Gasket, Fuel Pump	1
24	41-0710	Diaphragm, Fuel Pump	1
25	41-0930	Screen, Inlet	1
26	41-0940	Clip, Throttle Shaft	1
27	41-1010	Valve, Inlet Needle	1
28	41-0880	Lever, Metering	1
29	41-1020	Pin, Metering Lever	1
30	41-1030	Screw, Metering Lever Pin	1
31	41-0870	Spring, Metering Lever	1
*	41-0660	Carburetor Assembly (Incl. Ref. #1-31)	1

*Not Illustrated

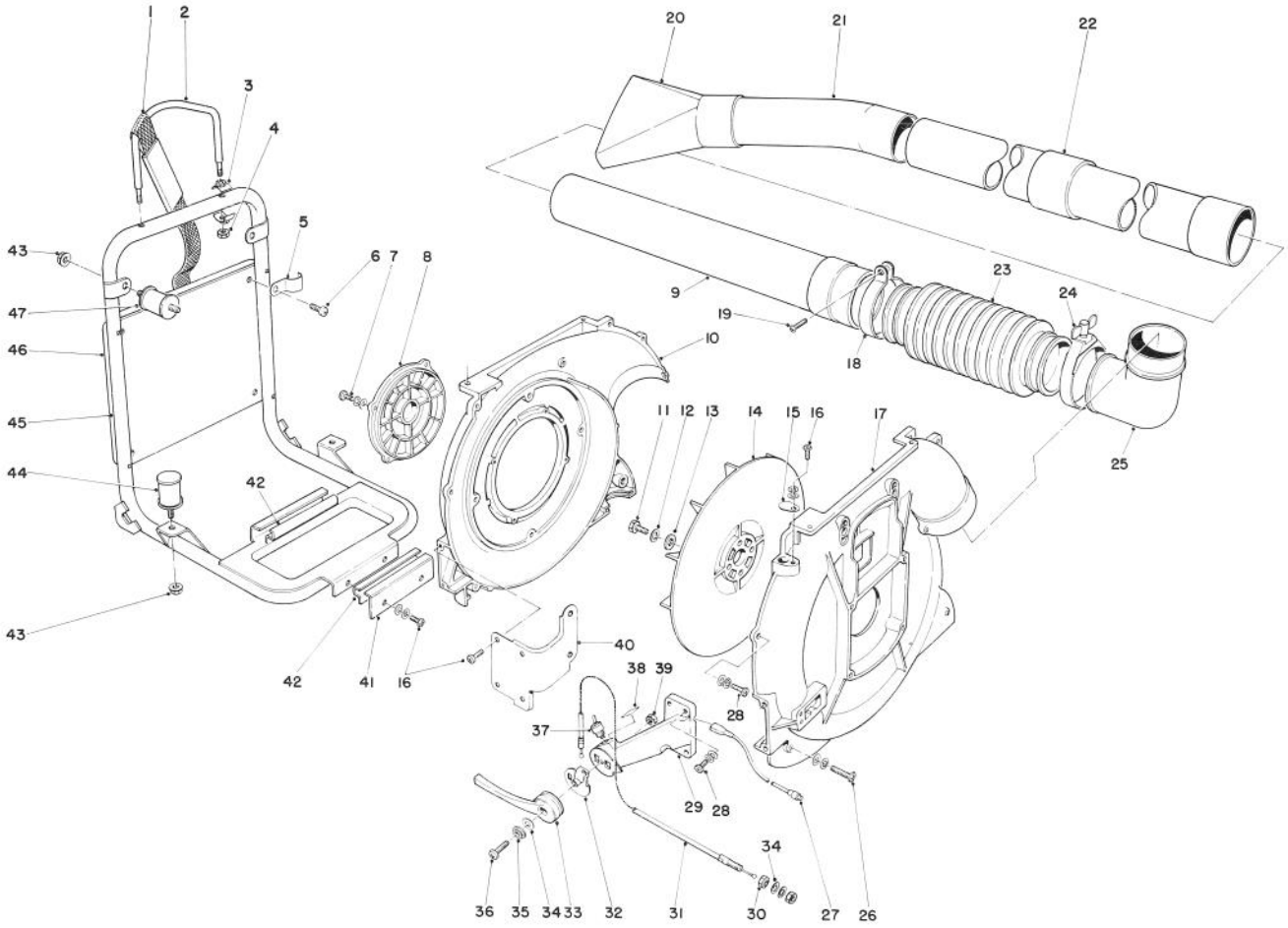

BACK PACK AND BLOWER HOUSING ASSEMBLY

Ref. No.	Part No.	Description	No. Used
1	40-2610	Shoulder Strap	2
2	41-3990	Arm	1
3	41-4000	Adapter	4
4	41-4010	Locknut	2
5	41-3960	Bracket Cushion	4
6	3290-144	Screw Hex Hd.	4
7	41-5280	Screw	4
8	46-4590	Grid, Fan Case	1
9	41-3940	Straight Pipe w/Swivel	1
10	46-4570	Fan Case, Operator Side	1
11	41-4800	Bolt	4
12	47-6380	Spring Washer	4
13	47-6370	Washer	4
14	41-3680	Fan	1
15	41-3760	Plug	1
16	41-5190	Screw	7
17	41-3700	Fan Case, Recoil Starter Side	1
18	41-3890	Clamp	1
19	41-5110	Screw	1
20	41-3870	Fan Head Nozzle	1
21	41-3860	Curved Pipe	1

Ref. No.	Part No.	Description	No. Used
22	41-3840	Straight Pipe	2
23	41-3820	Flexible Pipe	1
24	41-3910	Clamp	1
25	41-3800	Elbow	1
26	41-5240	Screw	2
27	46-4620	Lead Switch	1
28	41-5230	Screw	8
29	41-3510	Bracket Throttle Lever	1
30	41-5380	Nut	2
31	41-3260	Throttle Cable	1
32	41-3520	Bracket	1
33	46-4610	Throttle Lever	1
34	41-5460	Washer	3
35	41-3550	Washer	1
36	41-5300	Screw	1
37	41-2640	Switch	1
38	41-4750	Decal – Stop	1
39	41-5360	Nut	1
40	46-4550	Bracket	1
41	41-1710	Bracket – Fuel Tank	1
42	41-1740	Cushion – Fuel Tank	2
43	46-4600	Nut	4

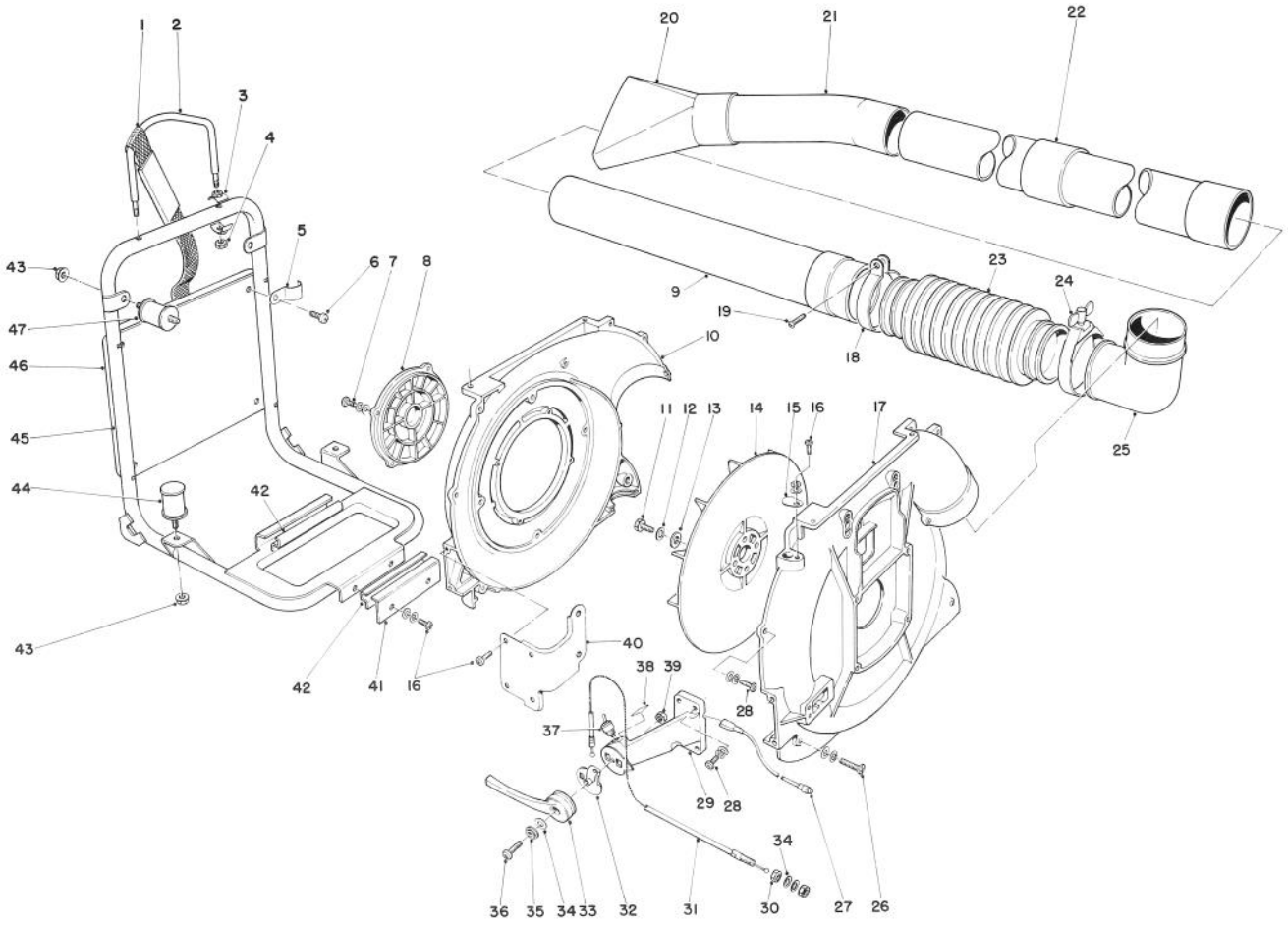

BACK PACK AND BLOWER HOUSING ASSEMBLY (Continued)

Ref. No.	Part No.	Description	No. Used
44	41-3790	Cushion	2
45	41-3950	Frame, Back Pack	1
46	40-5170	Back Pack Pad	1

Ref. No.	Part No.	Description	No. Used
47	41-3780	Cushion	2
*	44-7400	Ear Plug Kit	1

*Not Illustrated

MAINTENANCE RECORD

Litho in U.S.A.