Form No. 3471-219 Rev B

TORO®

Count on it.

Parts Catalog

Reelmaster® 5510-D

Traction Unit

Model No. 03954—Serial No. 418300000 and Up

Register at www.Toro.com.
Original Instructions (EN)

CE

3471-219 B

Ordering Replacement Parts

To order replacement parts, please supply the part number, the quantity, and the description of each part desired.

Understanding Reference Numbers

Each identified part in an illustration has a reference number. The reference number for a part also appears in the parts list, along with other information about the part.

This catalog uses two special reference number formats, one to indicate parts in a service assembly and another to indicate the quantity of a given part in an illustration.

Service Assembly Reference Numbers

Parts in service assemblies have reference numbers in the form a:b. The a represents the reference number of the entire service assembly and the b represents a sequential number unique to each part within the service assembly.

For example, a wheel assembly might be identified by reference number 6, the tire by 6:1, the valve by 6:2, and the wheel by 6:3. When you order the assembly identified by reference number 6, you receive all parts identified by reference numbers 6:1,6:2, and 6:3. However, you may also order any part individually. Reference numbers of this type appear in illustration and in parts lists.

Reference Numbers Indicating Quantity

In an illustration, if a reference number indicates more than one part, the reference number has the form nX y. The n represents the quantity of the part, the X is the multiplication symbol, and the y represents the reference number.

For example, in an illustration, the reference number 2X 37 means that two of the parts identified by reference number 37 are indicated.

Contents

Frame Assembly 5
Platform and Shroud Assembly 6
Pedal Assembly 7
Steering Assembly 8
Steering Tilt Column Assembly No. 106-3622 9
Steering Valve Assembly No. 106-3621 10
Control Panel Assembly 11
Joystick Bracket Assembly No. 120-5280 13
Front Axle Assembly 14
Rear Axle Assembly 15
Tie Rod Assembly No. 139-6029 16
Hub and Spindle Assembly No. 117-8961 17
No. 1, 4 and 5 Lift Arm Assembly 18
No. 2 and 3 Lift Arm Assembly 20
Seat and Control Arm Wiring Harness Assembly 21
Main Wiring Harness Assembly 22
Wire Harness Assembly No. 122-2912 23
Battery Mounting Assembly 24
Gear Pump Assembly 25
Gear Pump Assembly No. 107-4547 26
Seat Base Assembly 27
Hood Assembly 28
Radiator Assembly 29
Hydraulic Tank Assembly 30
Fuel System Assembly 31
Seat and Roll-Over Protection System Assembly 32
Seat Assembly No. 139-2700 33
Mechanical Seat Suspension Assembly No. 145-5295 34
Traction Pump Mounting Assembly 35
Hydraulic Pump Assembly No. 144-2060 36
Traction Hydraulic Assembly 38
Hydraulic Motor Assembly No. 139-6038 39
Hydraulic Motor Assembly No. 139-6039 40
Hydraulic Brake Assembly 41
Brake Release Manifold Assembly No. 139-6046 42
No. 1, 4 and 5 Reel Drive Hydraulic Assembly 43
Hydraulic Motor Assembly No. 120-6272 45
Manifold Assembly No. 121-5628 46
No. 2 and 3 Reel Drive Hydraulic Assembly 47
No. 1, 4 and 5 Lift Arm Hydraulic Assembly 49
Hydraulic Cylinder Assembly No. 138-6999 50
Hydraulic Cylinder Assembly No. 163-3534 51
Hydraulic Manifold Block Assembly No. 105-7577 52
Rear Lift Hydraulic Assembly 53
Steering Hydraulic Assembly 54
Hydraulic Cylinder Assembly No. 110-9035 56
Engine, Air Cleaner and Drive Shaft Assembly 57
Driveshaft Assembly No. 145-2508 59
Air Cleaner Assembly No. 106-5277 60
Cylinder Block Assembly 62
Gear Housing Assembly 64
Flywheel Housing and Oil Sump Assembly 66
Cylinder Head and Cover Assembly 68
Suction Manifold Assembly 70

© 2025—The Toro® Company

8111 Lyndale Avenue South
Bloomington, MN 55420

Contact us at www.Toro.com.
Printed in the USA.
All Rights Reserved

Contents (continued)

Exhaust Manifold Assembly 72
Diesel Particulate Filter Assembly 74
Camshaft and Driving Gear Assembly 76
Crankshaft and Piston Assembly 78
Lubrication and Oil System Assembly 80
Cooling System Assembly 82
Fuel System Assembly 84
Fuel Injection Valve Assembly 86
Fuel Line Assembly 88
Starting Motor Assembly 90
Generator Assembly 92
Electric Parts Assembly 94
Gasket Set 96
Attachments and Accessories 98

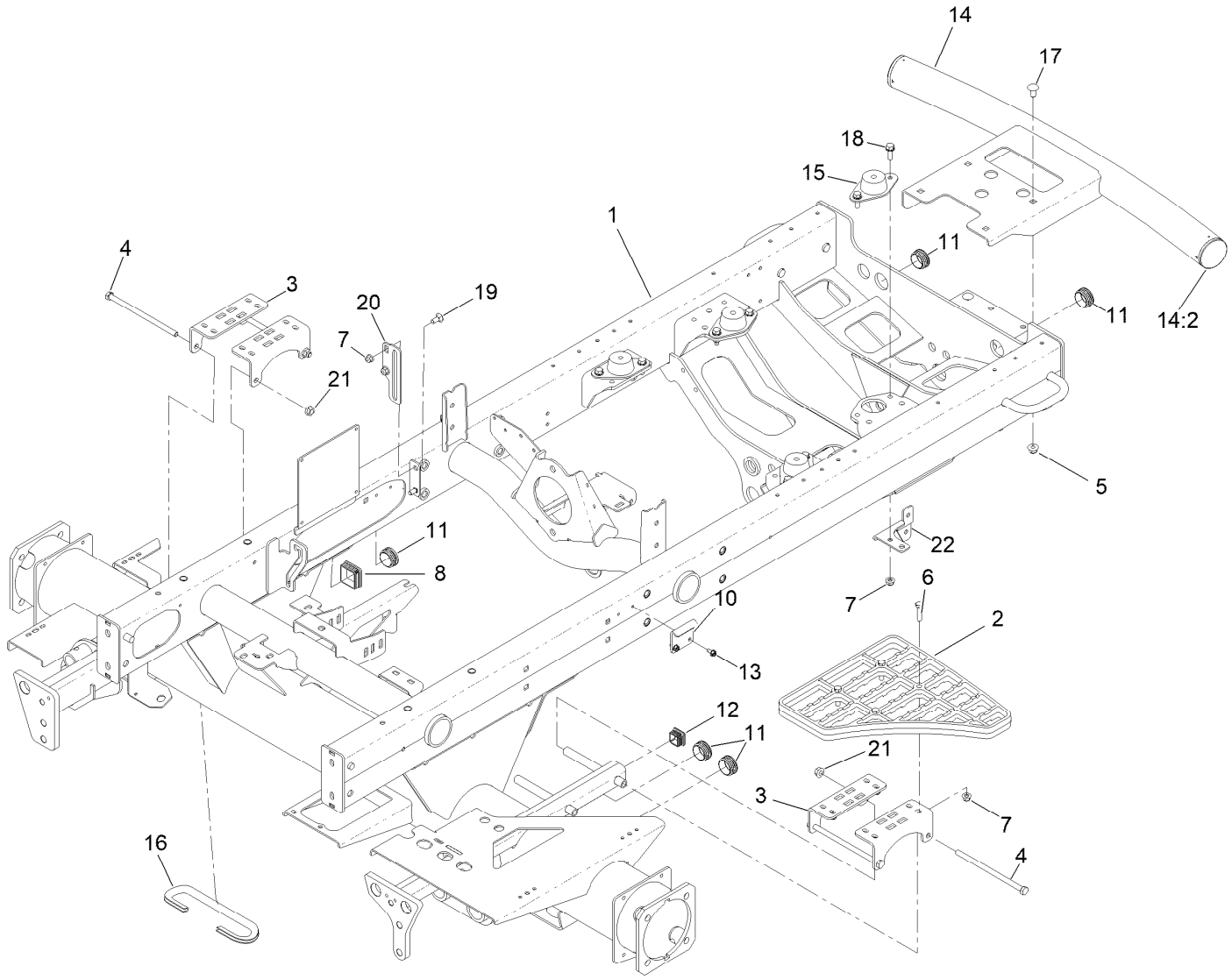

Frame Assembly

Ref.	Part Number	Qty.	Description
1	145-2469	1	Frame ASM
2	110-9041	1	Step-Aluminum
3	127-2697-01	4	Bracket-Step
4	323-36	4	Screw-HH
5	104-8301	4	Nut-HF, NI
6	322-17	4	Screw-HH
7	104-8300	14	Nut-HF, NI
8	95-9495	1	Cap
10	110-8972	1	Hook-Latch
11	110-9012	3	Caplug
12	110-9013	1	Caplug

Ref.	Part Number	Qty.	Description
13	32104-17	2	Screw-HWH
14	147-3550	1	Bumper ASM
14:2	2410-42	2	Cap-End
15	120-6274	4	Mount-Engine
16	145-2520	1	Trim-Brake Hose
17	3231-21	4	Screw-CARR
18	3234-29	8	Screw-HHF
19	3230-1	2	Bolt-CARR
20	108-7584-01	1	Plate-Guide, Rod
21	32128-21	4	Nut-HF Lock
22	133-2985	1	Brkt-Tube Clamp

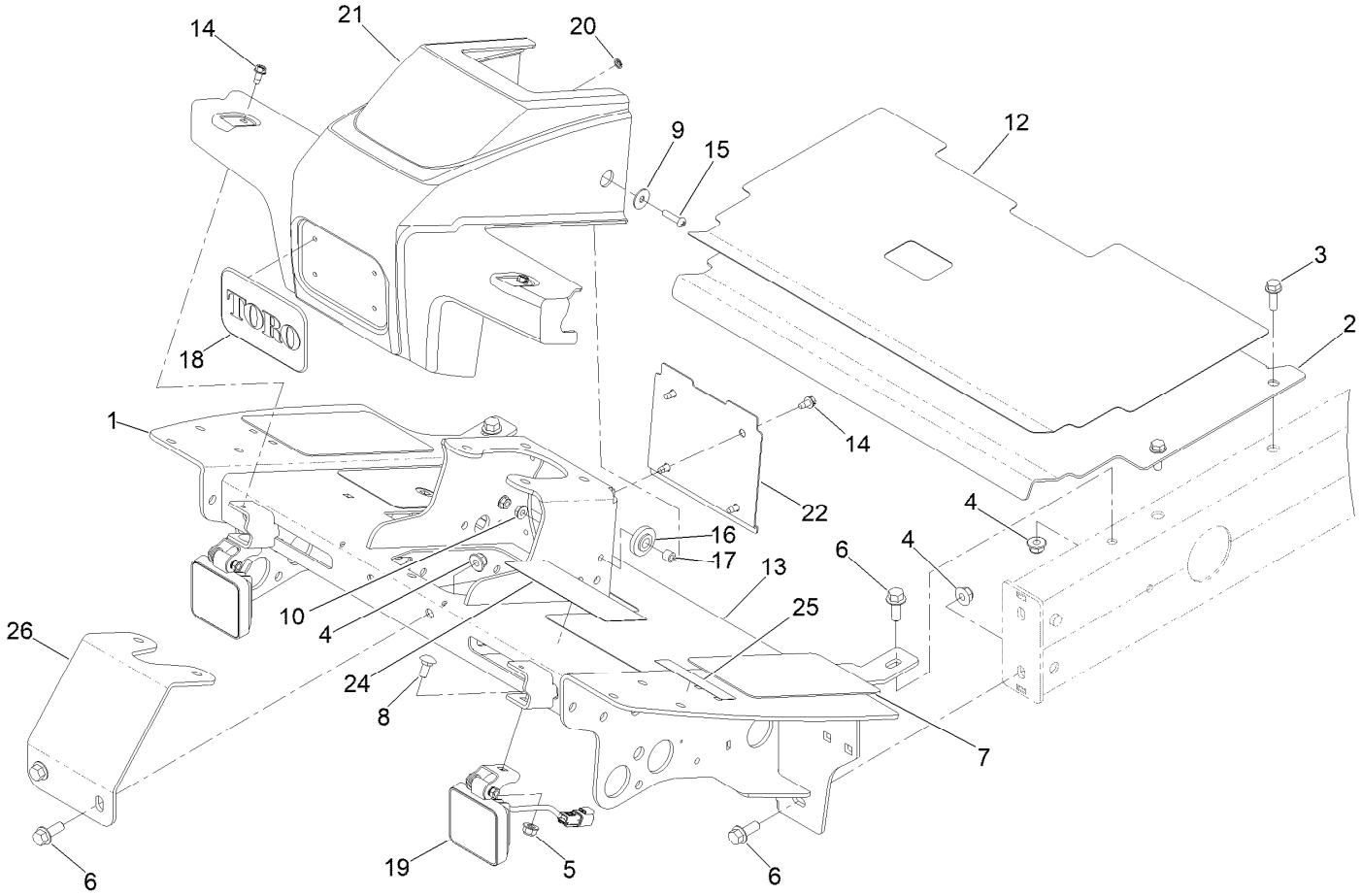

Platform and Shroud Assembly

Ref.	Part Number	Qty.	Description
1	145-2490-01	1	Platform ASM
2	115-8064-01	1	Plate-Floor
3	3234-17	4	Screw-HHF
4	104-8301	6	Nut-HF, NI
5	104-8300	2	Nut-HF, NI
6	3234-11	6	Screw-HHF
7	125-2910	2	Tread-Floor, Side
8	3230-1	2	Bolt-CARR
9	87-6630	2	Washer-Plain
10	32128-33	2	Nut-HF
12	125-2911	1	Tread-Panel, Service
13	145-2510	1	Tread-Floor Board
14	32104-17	6	Screw-HWH

Ref.	Part Number	Qty.	Description
15	106-9518	2	Screw-PRH
16	240-11	2	Bushing-Flange
17	66-8010	2	Spacer
18	93-6028	1	Plate-Logo
19	145-2598	2	Light-Work, LED
20	138-6996	4	Nut-Push
21	110-0944	1	Shroud-Platform
22	110-0947-03	1	Plate-Cover
24	133-2930	1	Decal-Danger
24	133-2931	1	Decal-Danger (CE)
25	133-8062	1	Decal-Spark Arrestor
26	110-8876-0P	1	Brace-Column

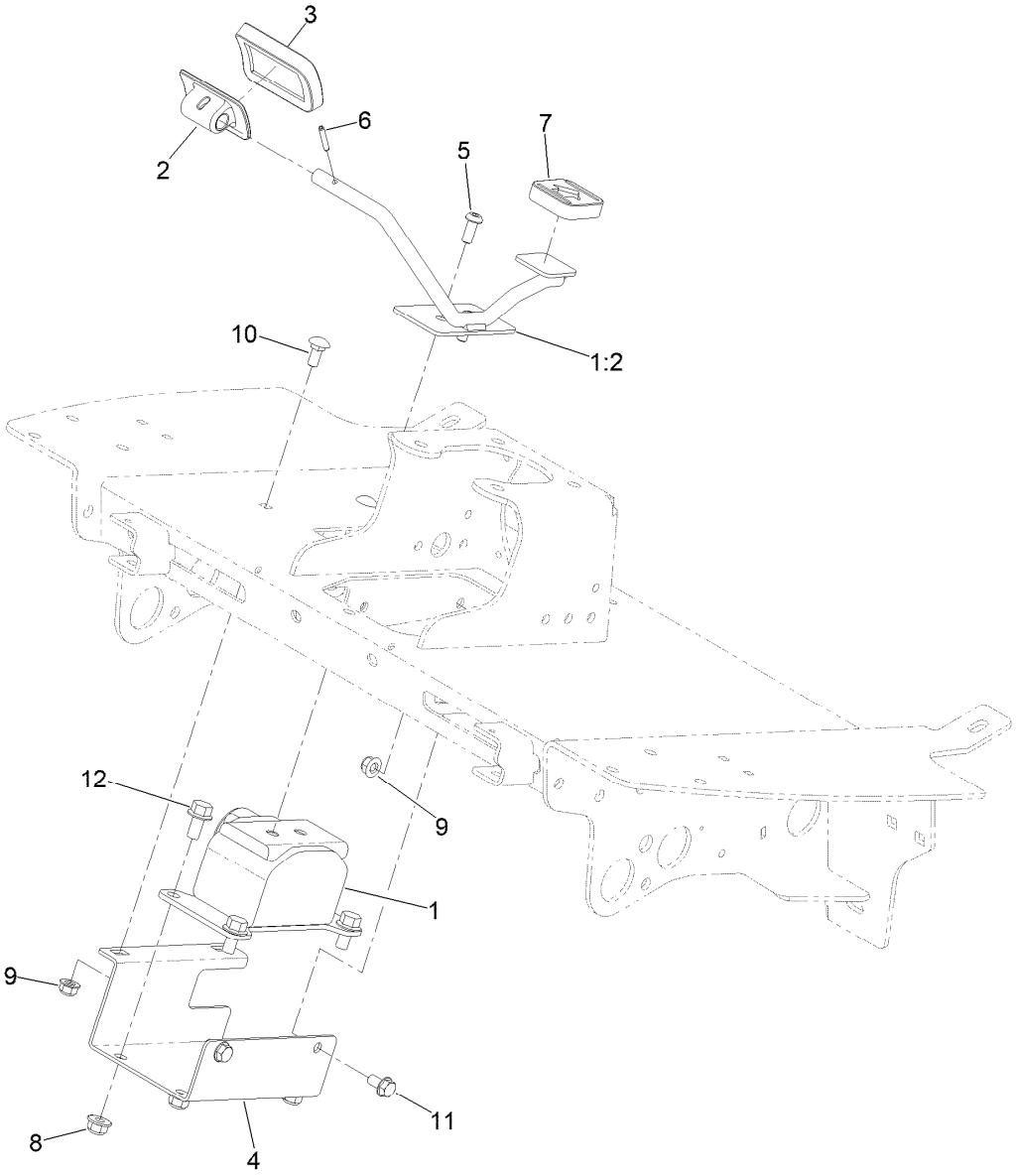

Pedal Assembly

Ref.	*Part Number*	*Qty.*	*Description*
1	145-2545	1	E-Pedal ASM
1:2	145-2521	1	Pedal ASM
2	117-9507	1	Pedal-Accelerator
3	74-9100	1	Pad-Pedal, Forward
4	145-2489-0P	1	Bracket-Pedal, Mount
5	3274-96	2	Screw-HSBH
6	32121-45	1	Pin-Spring
7	74-9110	1	Pad-Pedal, Reverse
8	104-8301	4	Nut-HF, NI
9	104-8300	4	Nut-HF, NI
10	3230-1	2	Bolt-CARR
11	3234-7	2	Screw-HHF
12	3234-1	4	Screw-HHF

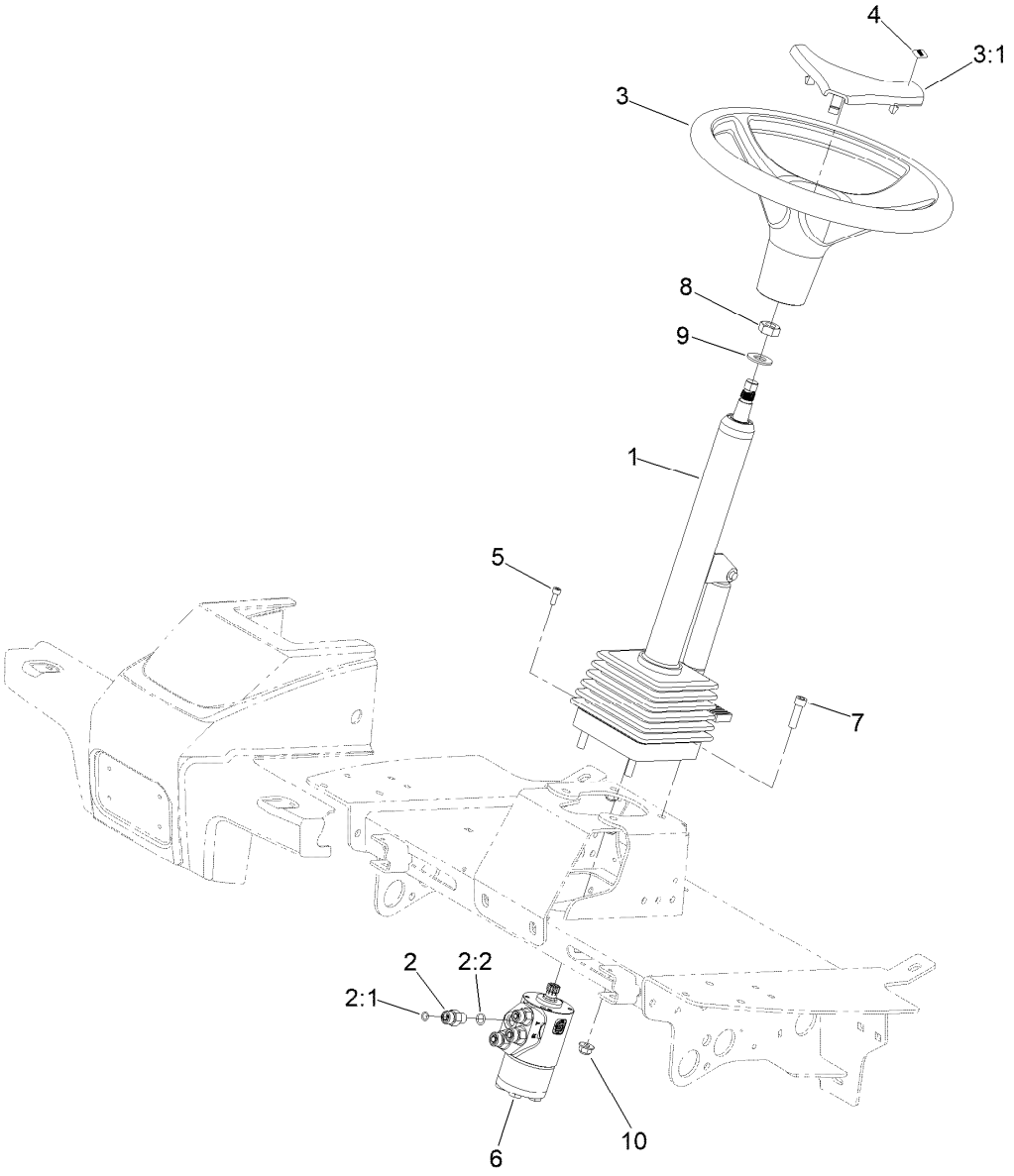

Steering Assembly

Ref.	*Part Number*	*Qty.*	*Description*
1	106-3622	1	Steering Tilt Column ASM
2	340-2	4	Fitting-Straight
2:1	237-22	1	O-Ring
2:2	237-42	1	O-Ring
3	98-1471	1	Wheel-Steering
3:1	98-1468	1	Cover-Wheel, Steering
4	98-1459	1	Decal
5	105-2409	4	Screw-HSH
6	106-3621	1	Steering Valve ASM
7	3274-1	4	Screw-HSH
8	3296-33	1	Nut-Lock, NI
9	3256-27	1	Washer-Flat
10	104-8301	4	Nut-HF, NI

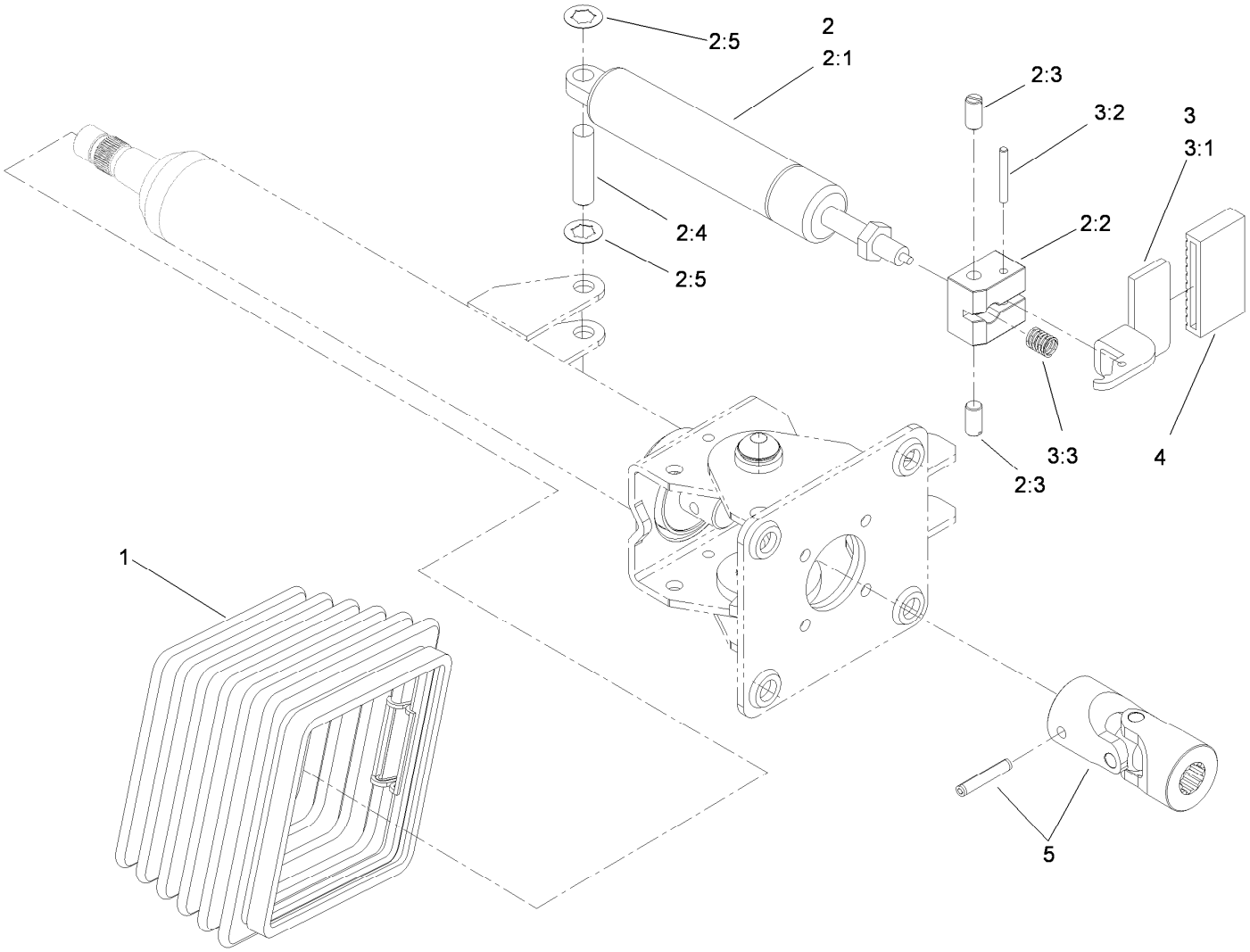

Steering Tilt Column Assembly No. 106-3622

Ref.	*Part Number*	*Qty.*	*Description*
1	110-6462	1	Bellows-Rubber
2	110-6463	1	Cylinder Service Kit
2:1		1	Cylinder-Gas ●
2:2		1	Block-Pedal ●
2:3		2	Bolt ●
2:4		1	Pin ●
2:5		2	Washer-Lock ●
3	110-6464	1	Pedal Service Kit
3:1		1	Pedal ●
3:2		1	Pin ●
3:3		1	Spring ●
4	110-6465	1	Cover-Pedal
5	120-6256	1	Universal Joint Kit

● Not serviced separately

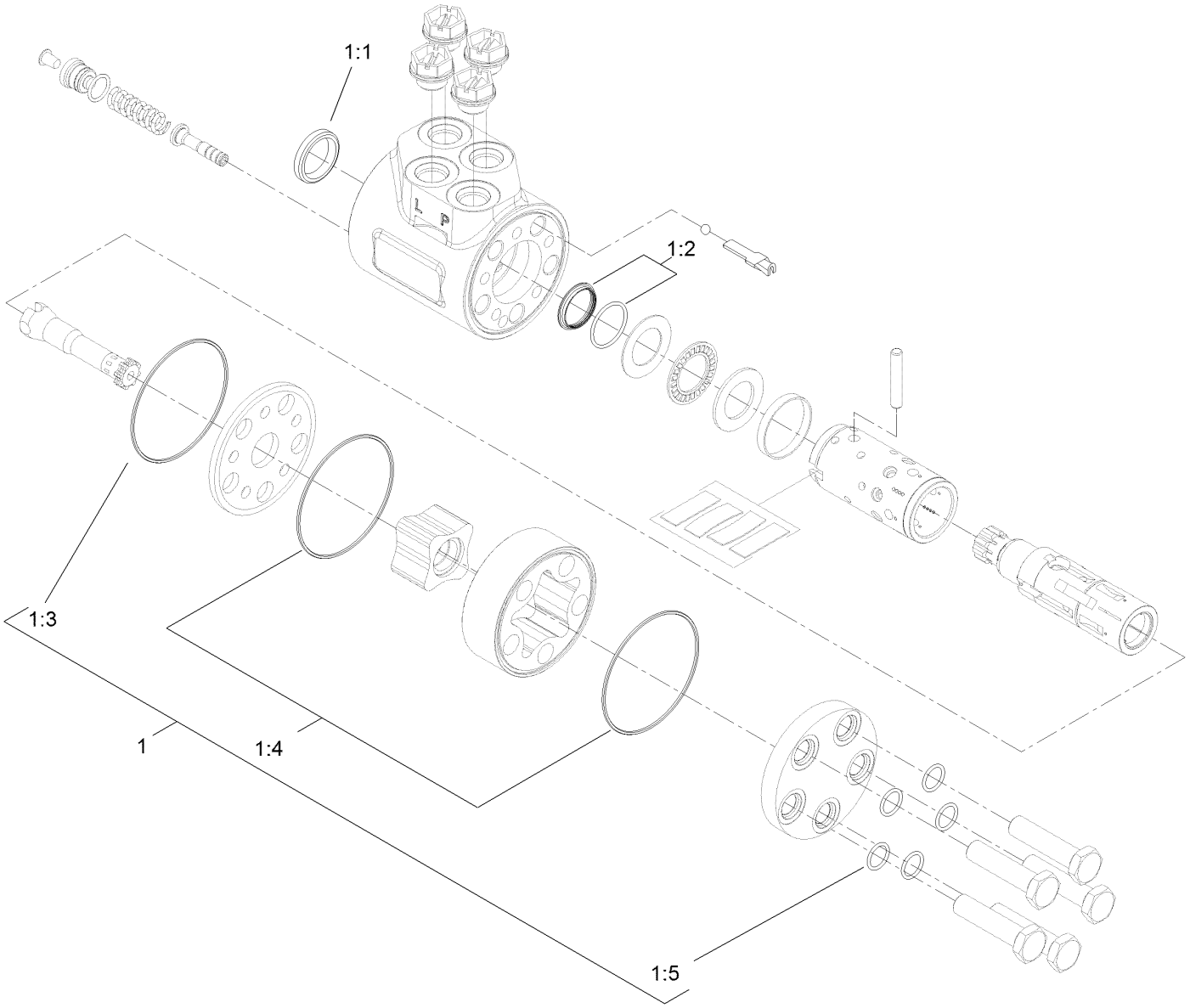

Steering Valve Assembly No. 106-3621

Ref.	*Part Number*	*Qty.*	*Description*
1	106-6716	1	Seal Kit
1:1		1	Ring-Seal, Dust ●
1:2		1	Seal-Shaft ●
1:3		1	O-Ring ●
1:4		2	O-Ring ●
1:5		5	O-Ring ●

● Not serviced separately

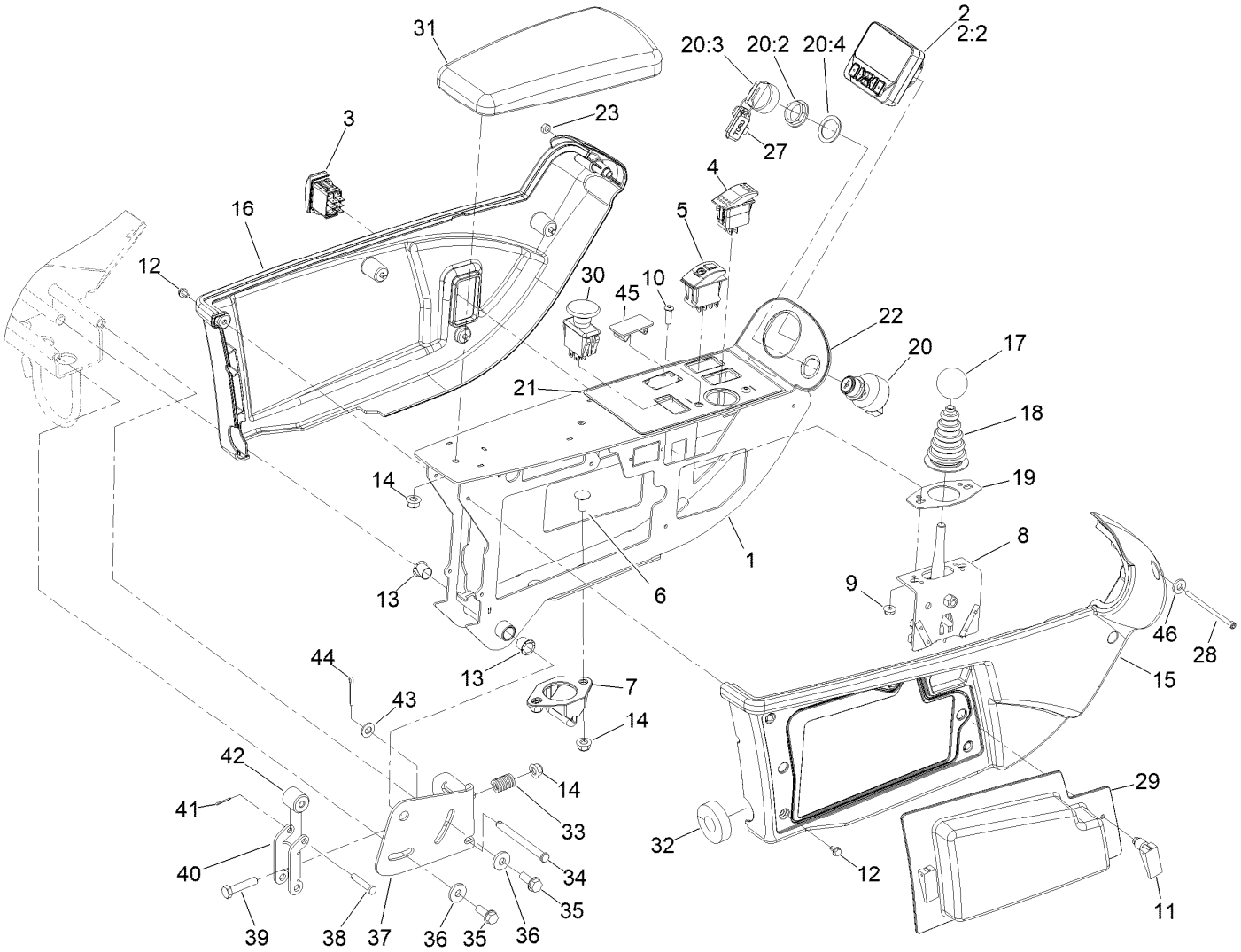

Control Panel Assembly

Ref.	Part Number	Qty.	Description
1	145-2474-03	1	Frame ASM, Control Arm [black]
2	161-1700	1	Display-LCD
2:2	161-1723	1	Nut-Display
3	95-8999	1	Switch-Rocker, On-None-On
4	114-3329	1	Switch-Rocker
5	111-2254	1	Switch-Rocker, On-None-On
6	3230-23	2	Bolt-CARR
7	125-1938	1	Latch
8	120-5280	1	Bracket-Joystick
9	104-7201	2	Nut-HF, NI
10	3274-69	2	Screw-HSBH
11	74-5950	2	Latch-Swell
12	104-2065	10	Screw-HWH
13	256-257	2	Bushing-Nyliner
14	104-8300	5	Nut-HF, NI
15	108-7605	1	Cover-RH
16	108-7604	1	Cover-LH
17	233-42	1	Knob

Ref.	Part Number	Qty.	Description
18	93-5961	1	Boot-Lever
19	112-9181	1	Plate-Boot
20	106-5269	1	Ignition Switch ASM
20:2	108-8660	1	Nut-Mounting
20:3	106-5270	1	Ignition Key Set
20:4	108-8659	1	Washer-Backup
21	145-2483	1	Decal-Control Panel
22	120-4158	1	Decal-Console, Upper
23	3296-2	1	Nut-Lock, NI
27	99-8970	1	Key-Latch, Hood
28	161-8374	1	Screw-HSH
29	114-0446	1	Panel-Access
30	93-9999	1	Switch-PTO
31	108-7602	1	Rest-Arm
32	145-2594	1	Seal-Foam
33	110-5331	1	Spring-Compression
34	283-88	1	Pin-Clevis
35	32144-41	2	Screw-Taptite
36	4-2390	2	Washer-Flat
37	110-5313-03	1	Bracket-Retainer
38	283-73	1	Pin-Clevis

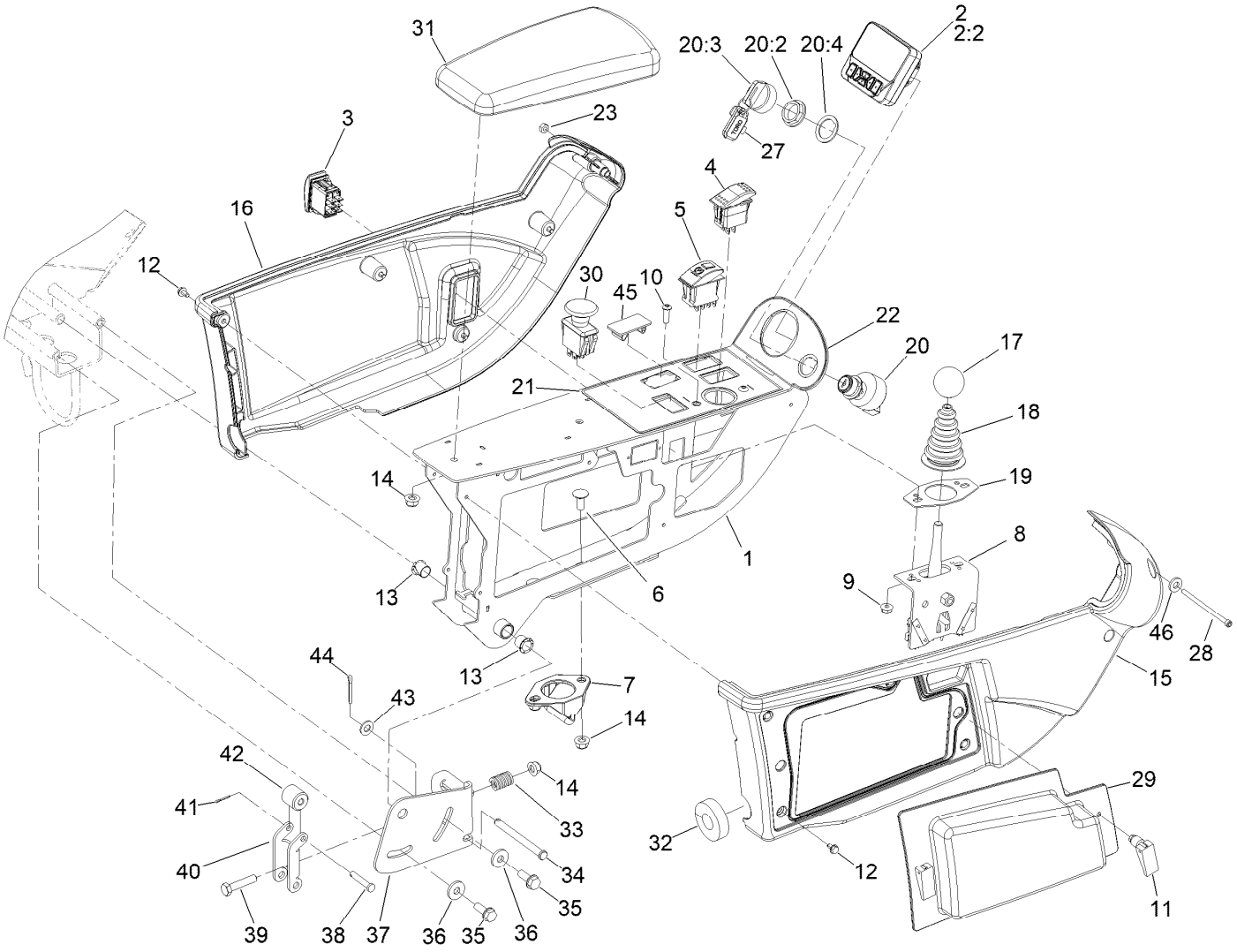

Control Panel Assembly (continued)

Ref.	Part Number	Qty.	Description
39	322-7	1	Screw-HH
40	110-5314	1	Latch
41	3272-1	1	Pin-Cotter
42	110-8856	1	Spacer
43	3256-23	1	Washer-Plain
44	3272-11	1	Pin-Cotter
45	99-7420	1	Plug-Hole
46	3256-51	1	Washer-Flat

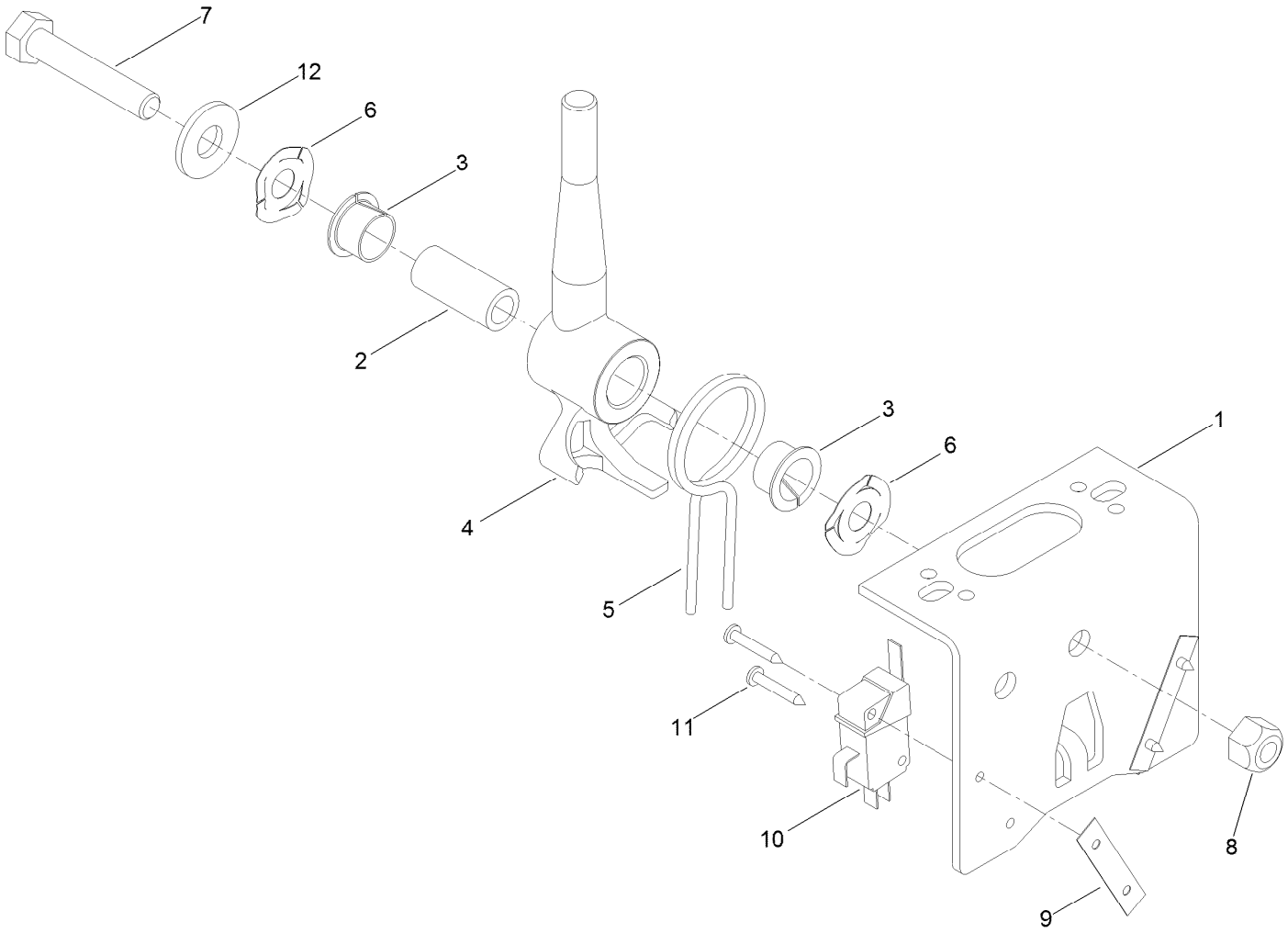

Joystick Bracket Assembly No. 120-5280

Ref.	*Part Number*	*Qty.*	*Description*
1	115-5357-03	1	Bracket-Joystick
2	106-4192	1	Spacer
3	93-5547	2	Bushing-Nylon
4	119-3540	1	Hub-Pivot, Joystick
5	105-8289	1	Spring-Torsion
6	106-4193	2	Washer-Finger, Spring
7	322-9	1	Screw-HH
8	3296-29	1	Nut-Lock, NI
9	3290-354	2	Nut-Speed
10	108-6496	2	Switch (W/Boot)
11	95-3003	4	Screw-PPHTF
12	3256-3	1	Washer-Flat

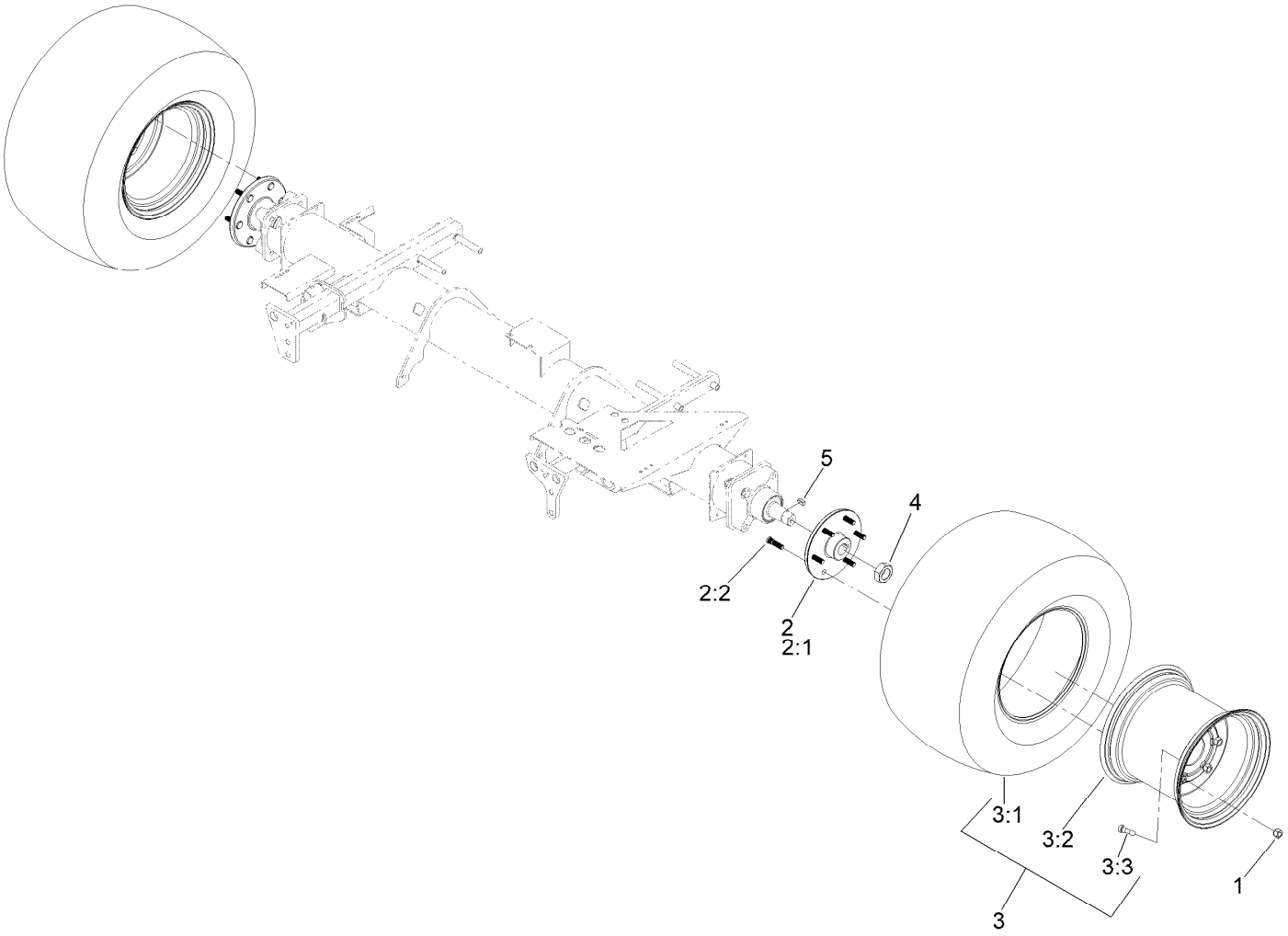

Front Axle Assembly

Ref.	*Part Number*	*Qty.*	*Description*
1	139-2564	12	Nut-Lug
2	144-2058	2	Hub ASM (1.50)
2:1	136-7971	1	Hub-Wheel
2:2	114-3918	6	Stud-Wheel
3	139-6048	2	Tire ASM
3:1	133-2724	1	Tire
3:2	139-6049	1	Wheel
3:3	232-27	1	Stem-Valve
4	117-3290	2	Nut-Hex
5	117-5198	2	Key-Square

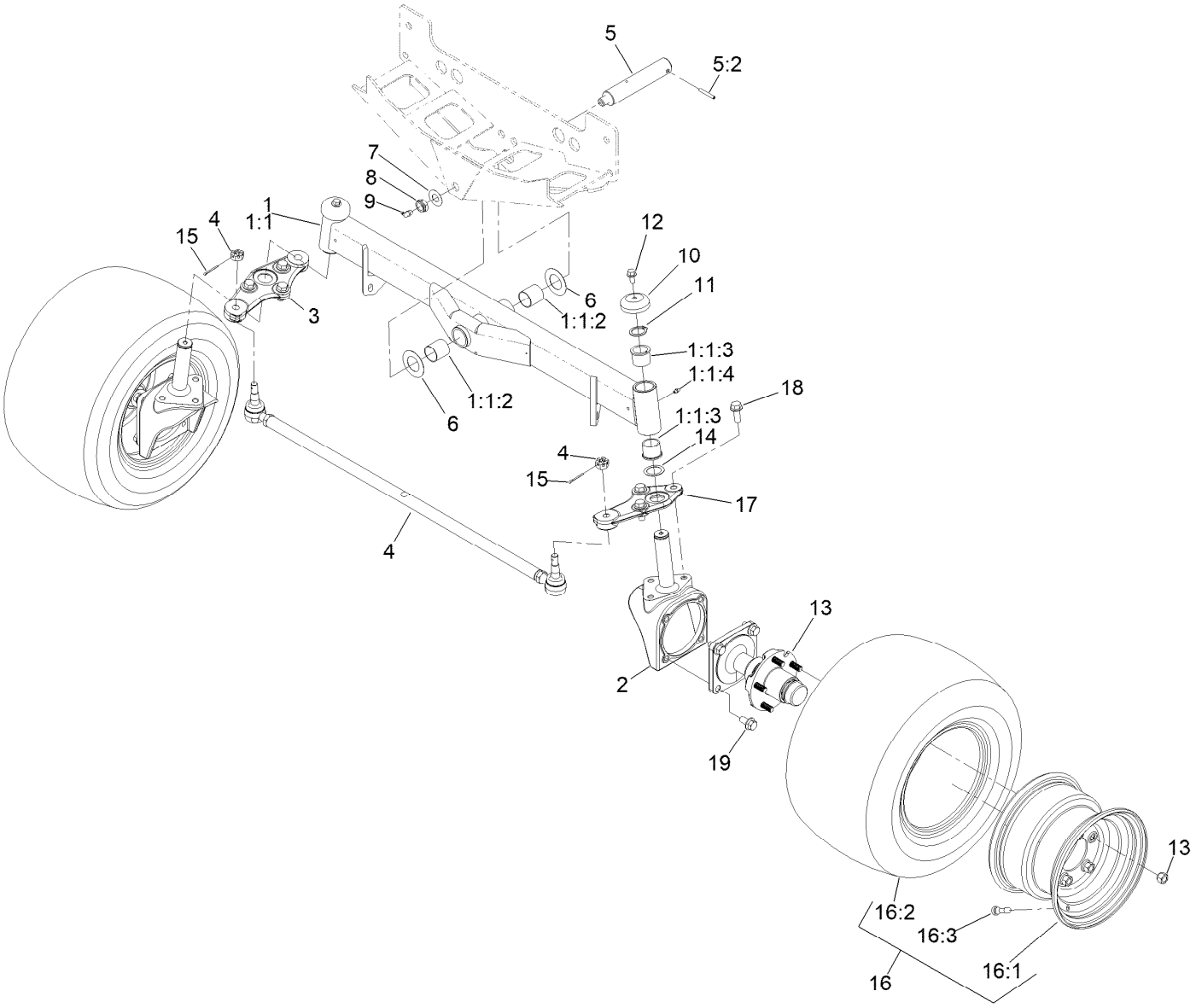

Rear Axle Assembly

Ref.	Part Number	Qty.	Description
1	107-4546-03	1	Axle ASM
1:1		1	Axle ●
1:1:2	99-6964	2	Bushing-Axle
1:1:3	104-0015	4	Bushing-Flange
1:1:4	302-5	2	Fitting-Grease
2	107-4517-03	2	Housing-Motor
3	140-3142	1	Link-Drag, RH
4	139-6029	1	Tie Rod ASM
5	140-6101	1	Pin ASM-Axle Pivot
5:2	32121-32	1	Pin-Roll
6	99-8432	2	Washer-Thrust
7	71-4540	1	Washer-Thrust
8	3296-15	1	Nut-Lock, NI
9	302-33	1	Fitting-Grease

Ref.	Part Number	Qty.	Description
10	69-8890	2	Cap-Spindle
11	32151-77	2	Ring-Retaining, External
12	3234-1	2	Screw-HHF
13	117-8961	2	Hub And Spindle ASM
14	76-2980	2	Washer-Thrust
15	3272-12	2	Pin-Cotter
16	117-0281	2	Rim And Tire ASM
16:1	117-0280	1	Rim
16:2	117-5125	1	Tire
16:3	232-27	1	Stem-Valve
17	140-3144	1	Link-Drag, LH
18	3234-38	6	Screw-HHF
19	3234-6	8	Screw-HHF

● Not serviced separately

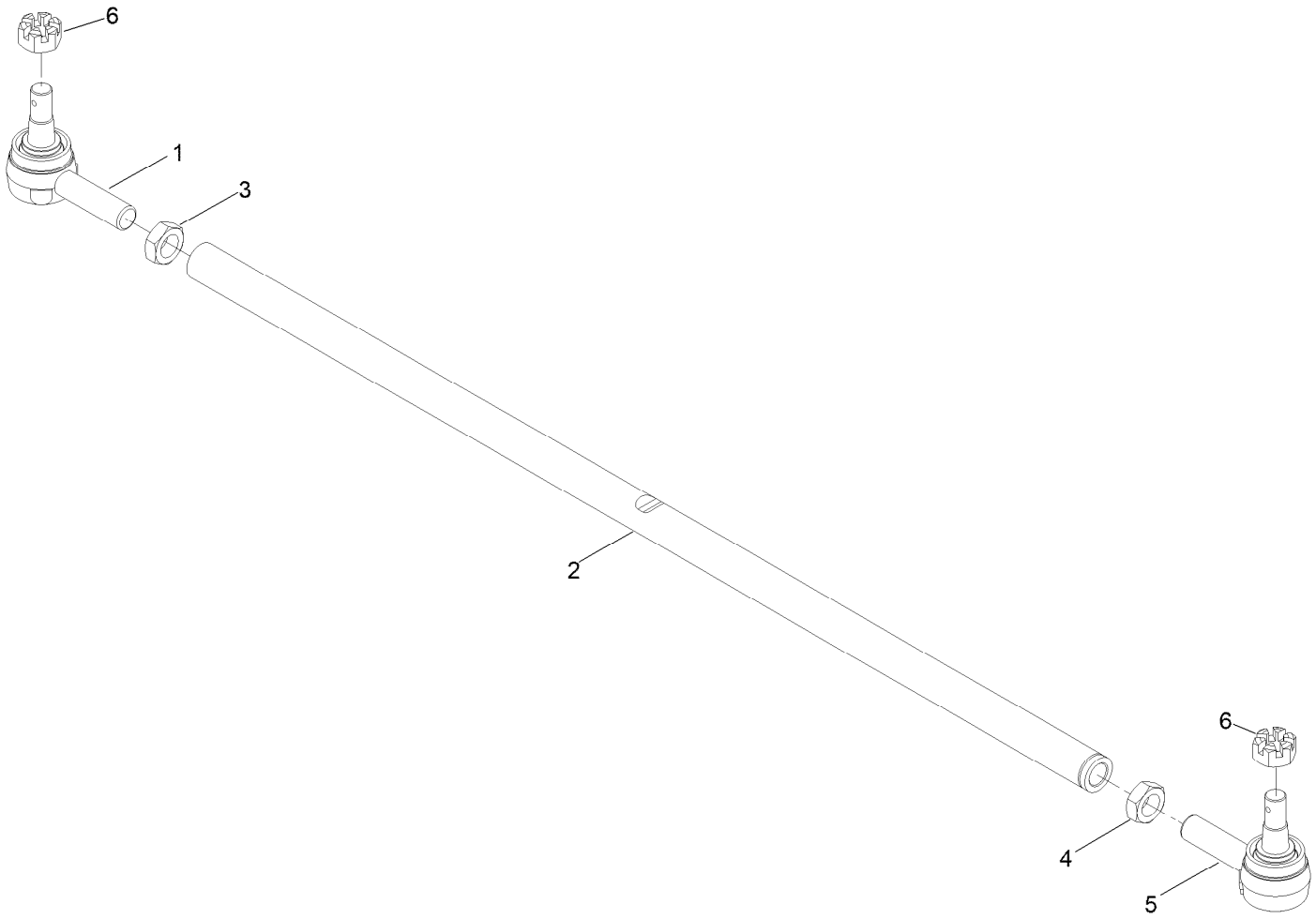

Tie Rod Assembly No. 139-6029

Ref.	*Part Number*	*Qty.*	*Description*
1	144-3901	1	Tie Rod End
2	139-6030	1	Rod-Tie
3	84-5300	1	Nut-Jam
4	110-5337	1	Nut-Jam
5	144-3902	1	Tie Rod End
6	140-6135	2	Nut-Hex, Slotted

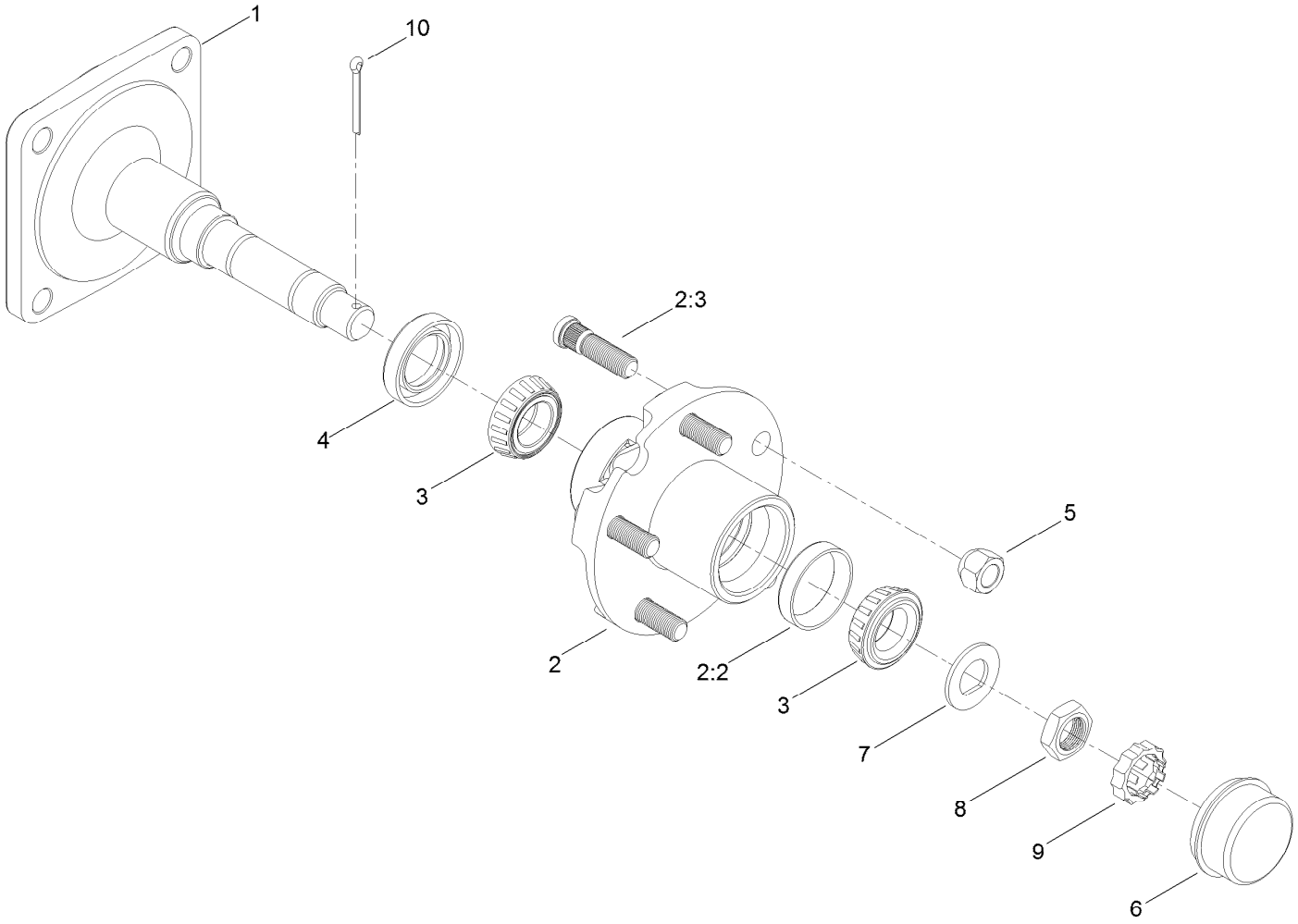

Hub and Spindle Assembly No. 117-8961

Ref.	*Part Number*	*Qty.*	*Description*
1	117-8958	1	Spindle
2	117-8963	1	Hub ASM
2:2	254-72	2	Bearing-Cup, Tapered
2:3	114-3918	5	Stud-Wheel
3	254-94	2	Bearing-Cone, Tapered
4	112-1690	1	Seal-Oil
5	139-2564	5	Nut-Lug
6	241-119	1	Cap-Dust
7	117-8259	1	Washer-Spindle
8	117-8260	1	Nut
9	93-0307	1	Nut-Lock, Retainer
10	3272-18	1	Pin-Cotter

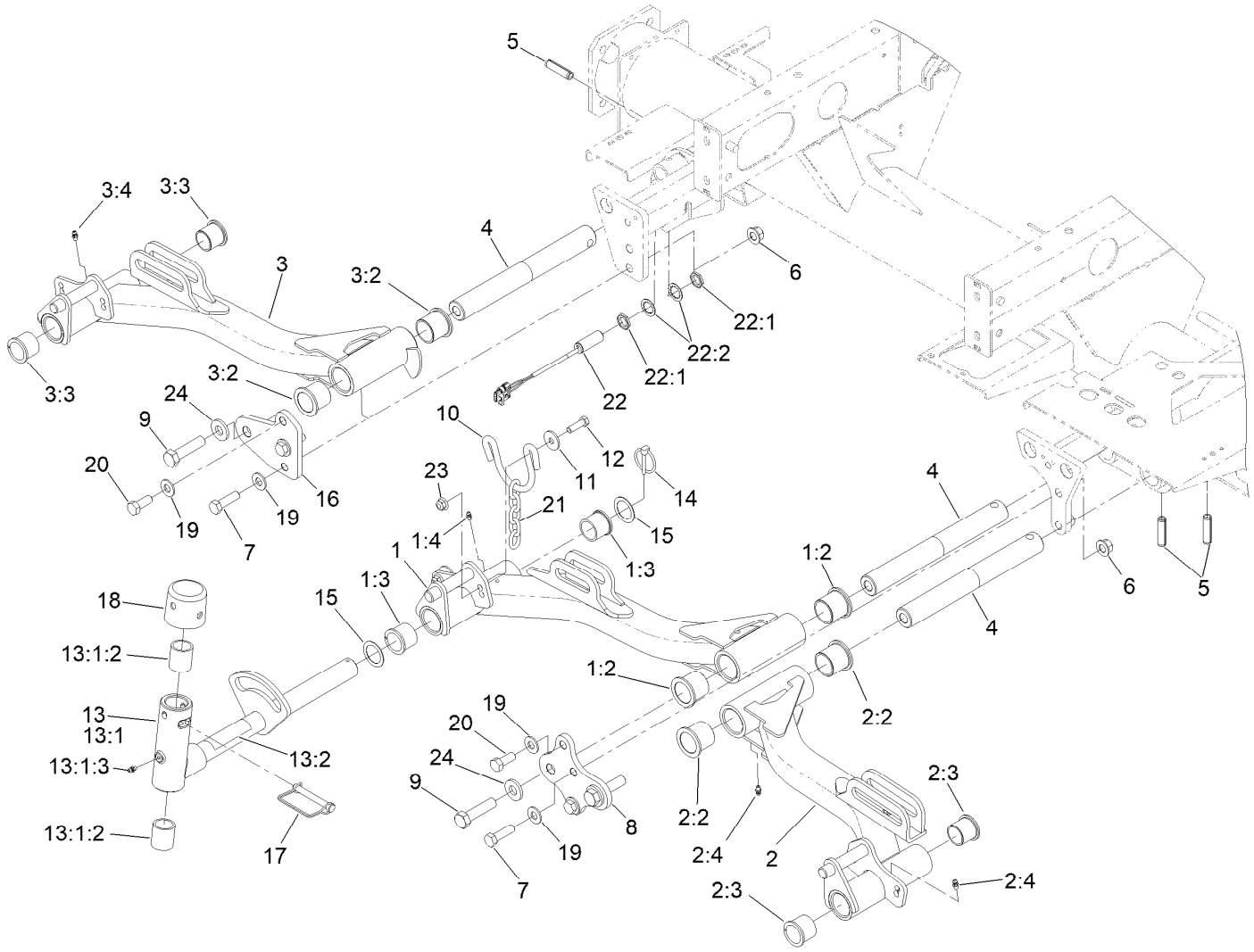

No. 1, 4 and 5 Lift Arm Assembly

Ref.	Part Number	Qty.	Description
1	133-2911	1	Lift Arm ASM #1
1:2	69-6470	2	Bushing-Caster
1:3	104-0015	2	Bushing-Flange
1:4	302-5	2	Fitting-Grease
2	133-2914	1	Lift Arm ASM #4
2:2	69-6470	2	Bushing-Caster
2:3	104-0015	2	Bushing-Flange
2:4	302-5	2	Fitting-Grease
3	133-2915	1	Lift Arm ASM #5
3:2	69-6470	2	Bushing-Caster
3:3	104-0015	2	Bushing-Flange
3:4	302-5	2	Fitting-Grease
4	117-0208	3	Shaft-Pivot, Liftarm
5	32121-122	3	Pin-Roll
6	99-5107	4	Nut-Lock
7	325-7	4	Screw-HH
8	117-5154-01	1	Plate-Bridge 1 And 4
9	327-7	3	Screw-HH

Ref.	Part Number	Qty.	Description
10	110-0922	3	Hoop-Chain
11	63-8410	6	Washer
12	323-7	6	Screw-HH
13	138-1248	3	Pivot Yoke ASM
13:1		1	Yoke-Pivot ●
13:1:2	121-3187	2	Bushing
13:1:3	302-5	1	Fitting-Grease
13:2	110-9642	1	Decal-Warning
14	92-1298	3	Pin-Lynch
15	76-2980	6	Washer-Thrust
16	117-5153-01	1	Plate-Bridge 5
17	107-7400	3	Pin-Lynch
18	107-4027	3	Cap
19	87-7270	6	Washer-Thrust
20	325-5	2	Screw-HH
21	84-2451	3	Chain-Straight, 5 Link
22	115-5300	1	Proximity Switch ASM
22:1	117-3207	2	Nut-Hex

● Not serviced separately

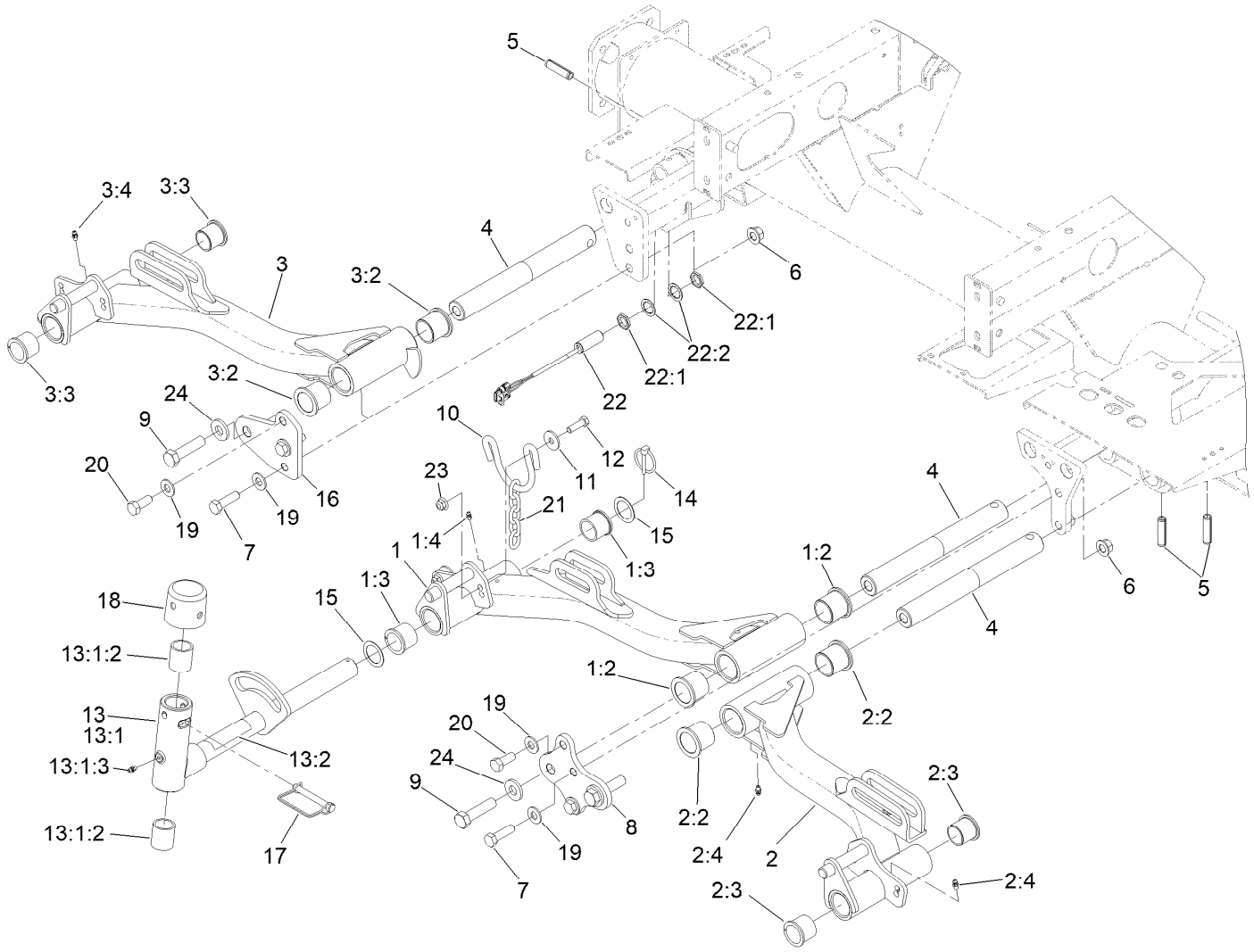

No. 1, 4 and 5 Lift Arm Assembly (continued)

Ref.	Part Number	Qty.	Description
22:2	117-3208	2	Washer-Lock, Internal Tooth
23	104-8301	6	Nut-HF, NI
24	99-7667	3	Washer-Flat

● Not serviced separately

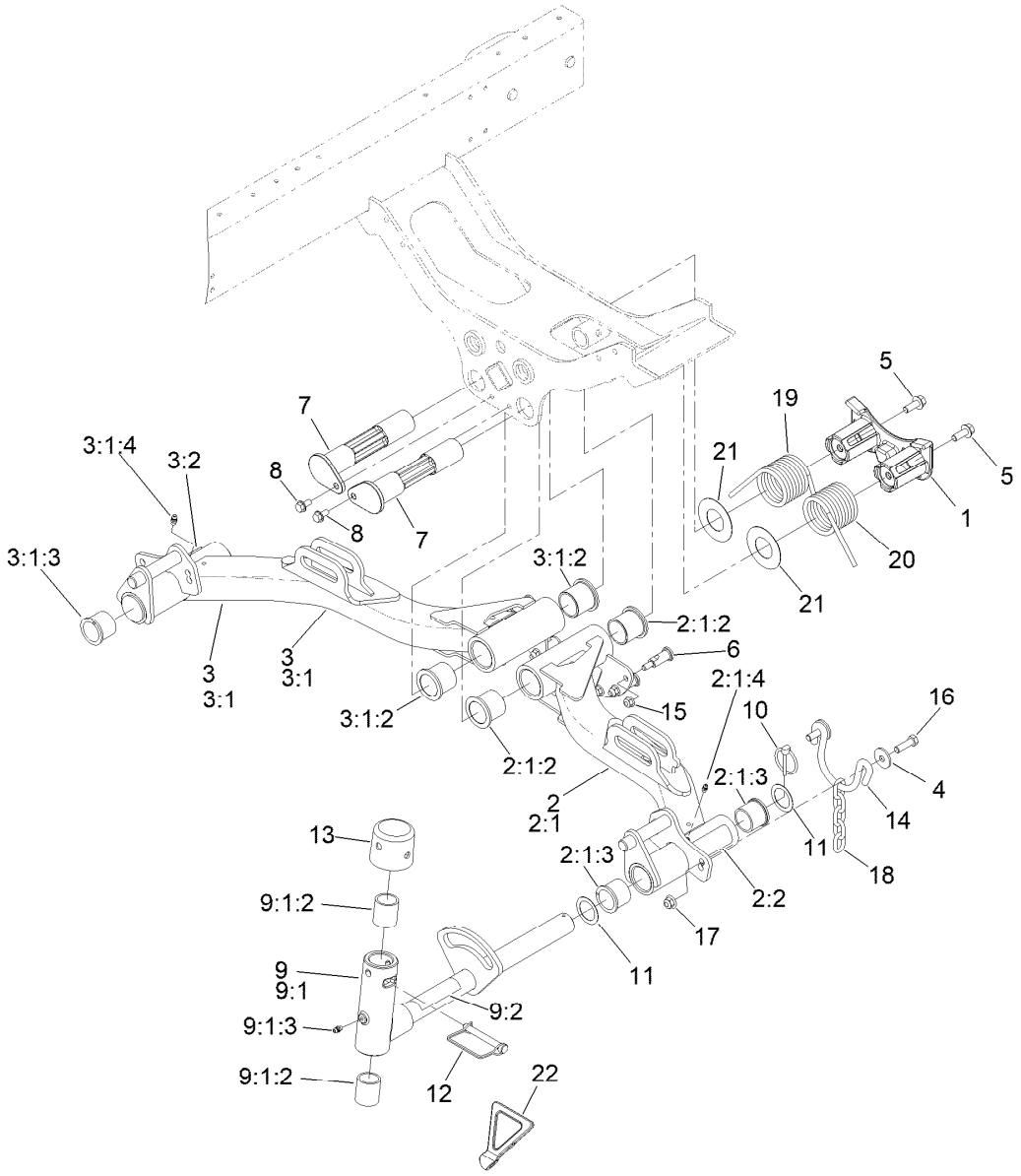

No. 2 and 3 Lift Arm Assembly

Ref.	Part Number	Qty.	Description
1	125-2018	1	Housing
2	136-8002	1	Lift Arm #2
2:1		1	Lift Arm ASM #2 ●
2:1:2	69-6470	2	Bushing-Caster
2:1:3	104-0015	2	Bushing-Flange
2:1:4	302-5	2	Fitting-Grease
2:2	93-6696	1	Decal-Warning
3	136-8003	1	Lift Arm #3
3:1		1	Lift Arm ASM #3 ●
3:1:2	69-6470	2	Bushing-Caster
3:1:3	104-0015	2	Bushing-Flange
3:1:4	302-5	2	Fitting-Grease
3:2	93-6696	1	Decal-Warning
4	63-8410	4	Washer
5	3234-11	2	Screw-HHF
6	120-6283	6	Stud-Shouldered
7	125-2037	2	Shaft
8	32144-14	2	Screw-HWHTF

Ref.	Part Number	Qty.	Description
9	138-1248	2	Pivot Yoke ASM
9:1		1	Yoke-Pivot ●
9:1:2	121-3187	2	Bushing
9:1:3	302-5	1	Fitting-Grease
9:2	110-9642	1	Decal-Warning
10	92-1298	2	Pin-Lynch
11	76-2980	4	Washer-Thrust
12	107-7400	2	Pin-Lynch
13	107-4027	2	Cap
14	110-0922	2	Hoop-Chain
15	104-8300	6	Nut-HF, NI
16	323-7	4	Screw-HH
17	104-8301	4	Nut-HF, NI
18	84-2451	2	Chain-Straight, 5 Link
19	99-5608-03	1	Spring-Torsion, RH
20	99-5609-03	1	Spring-Torsion, LH
21	110-5345	2	Washer
22	119-8010-03	1	Kickstand

● Not serviced separately

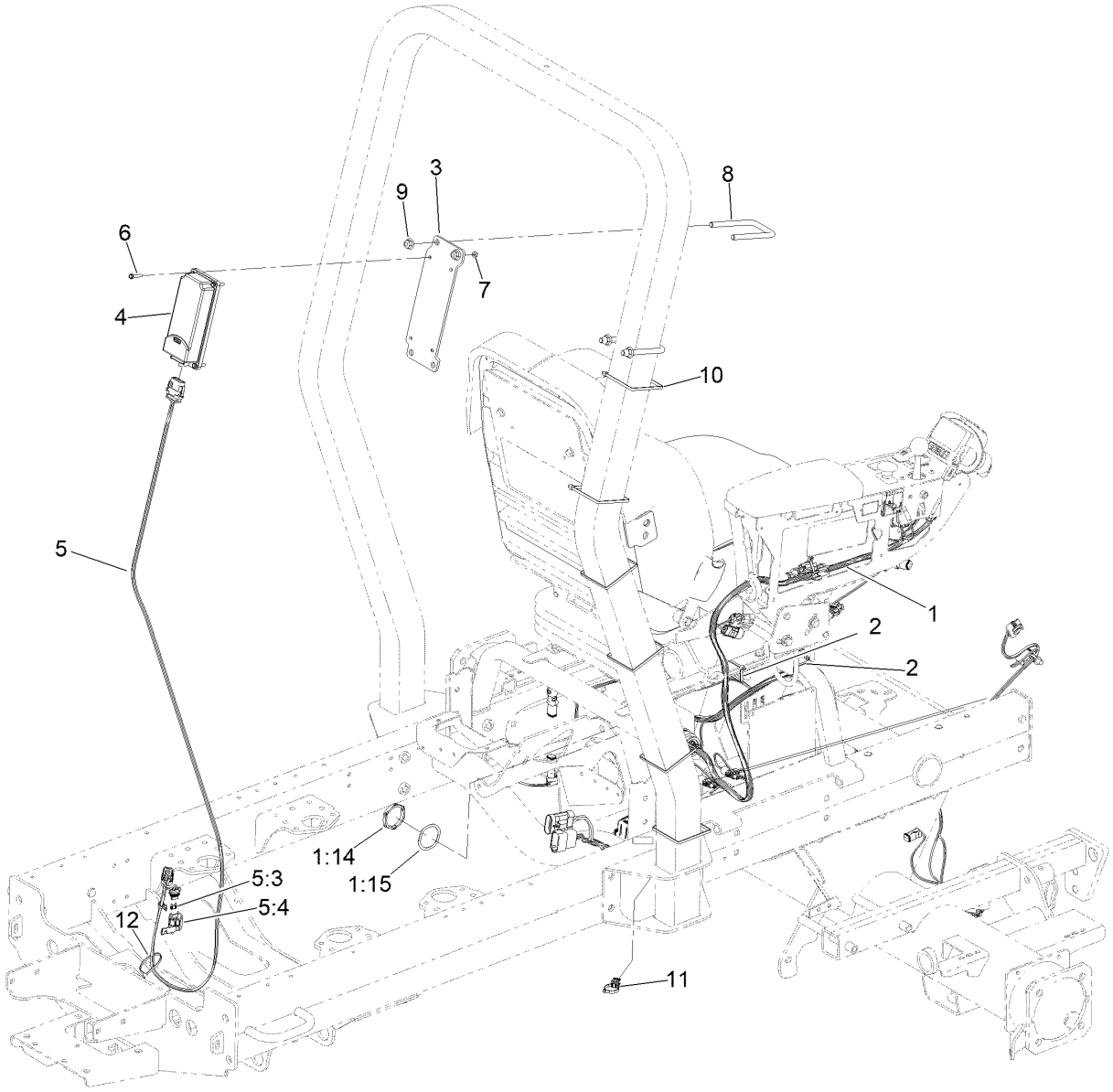

Seat and Control Arm Wiring Harness Assembly

Ref.	Part Number	Qty.	Description
1	122-2126	1	Harness-Wire, Seat
1:14	32180-135	1	Nut-Connector
1:15	32180-143	1	Washer-Lock
2	3290-378	2	Tie-Cable
3	161-8398-03	1	Bracket-Hmu Mouting
4	161-9001	1	Gateway-Telematics
5	122-2163	1	Harness-Wire
5:3	121-8861	1	Fuse-Mini Blade, 2 Amp
5:4	32180-101	1	Cover-Fuse, Single
6	131-6456	4	Screw-HWH
7	3296-2	4	Nut-Lock, NI
8	138-8991	2	U-Bolt-Sq
9	104-8301	4	Nut-HF, NI
10	3290-379	6	Tie-Cable
11	32180-078	1	Clip-Edge
12	3290-378	2	Tie-Cable

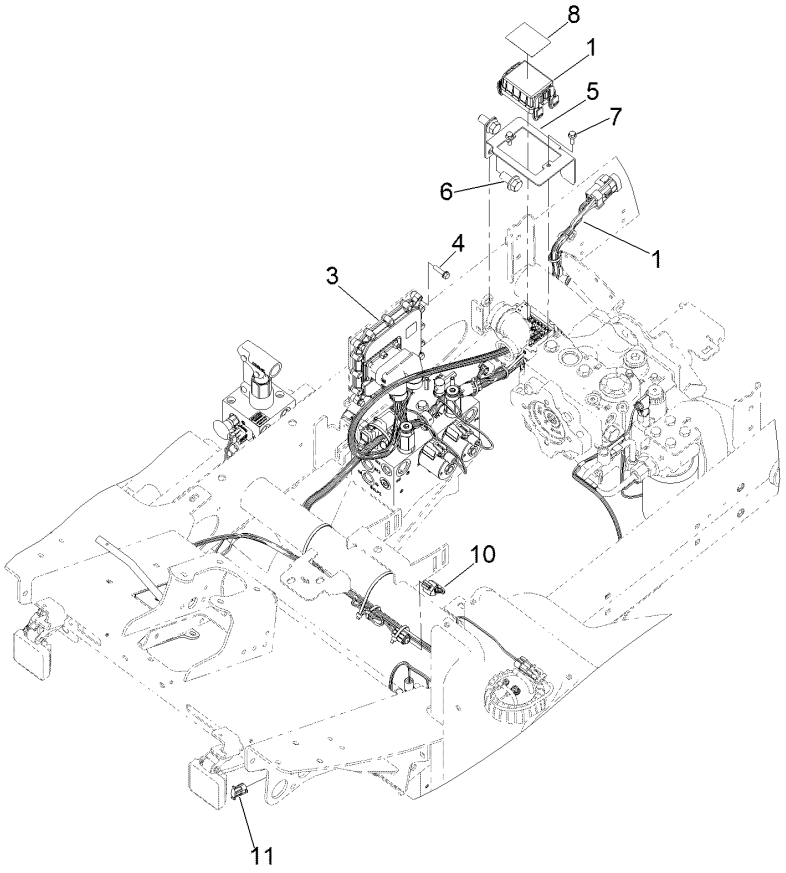

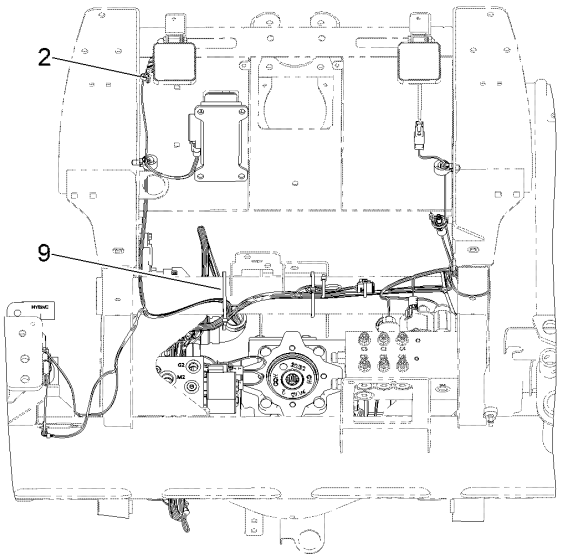

Main Wiring Harness Assembly

Ref.	*Part Number*	*Qty.*	*Description*
1	122-2912	1	Harness-Wire, Main
2	3290-378	1	Tie-Cable
3	127-2770	1	Controller
4	32144-86	4	Screw-HWHTF
5	145-2506-0P	1	Bracket-Pdm [primed]
6	3234-6	2	Screw-HHF
7	33103-020	2	Screw-HHF
8	145-2519	1	Decal-Fuses
9	3290-379	3	Tie-Cable
10	32180-089	1	Cap-Plug, 3 Way
11	32180-056	1	Cap

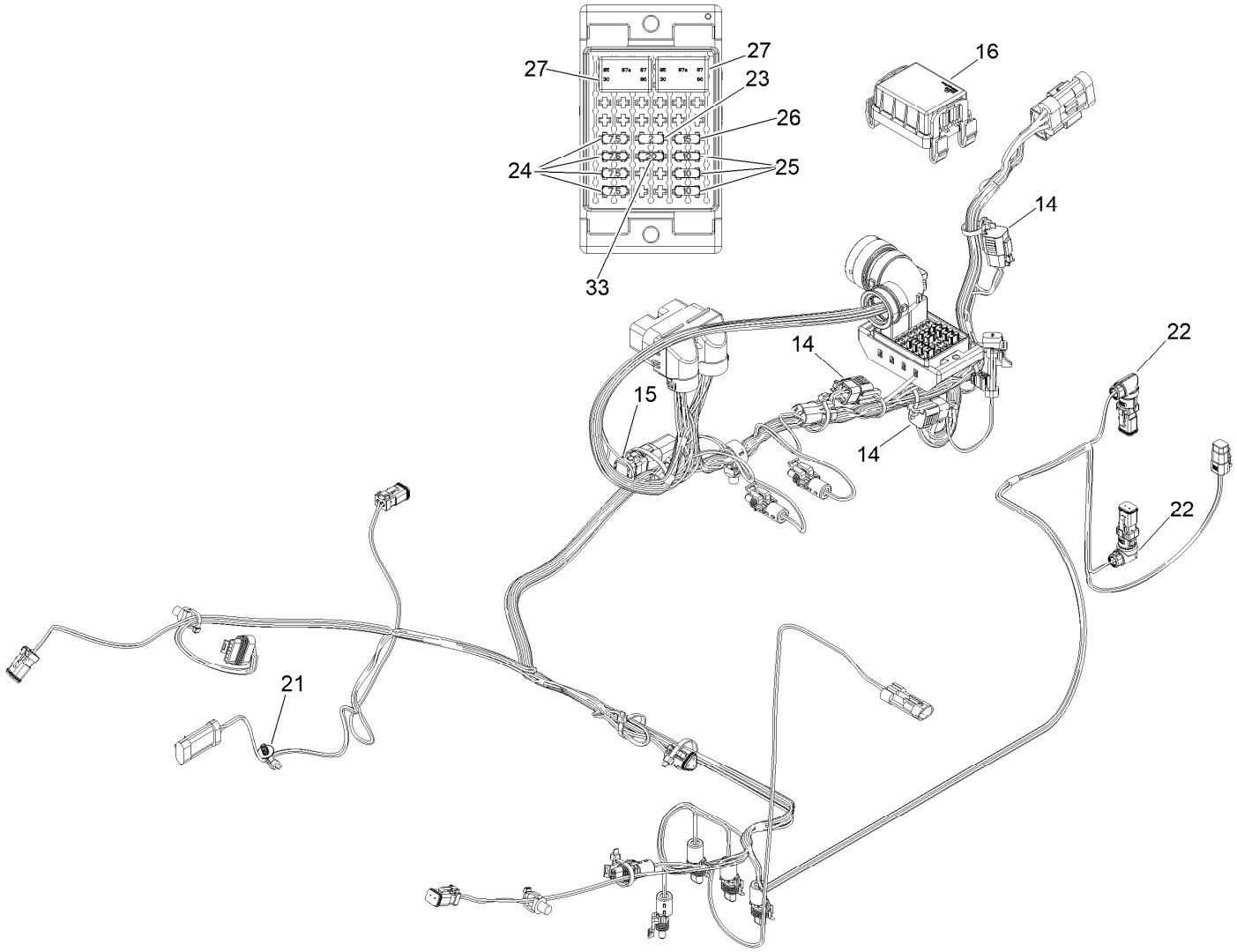

Wire Harness Assembly No. 122-2912

Ref.	*Part Number*	*Qty.*	*Description*
14	32180-156	3	Cap-Plug, 6 Way
15	122-1131	1	Conn, Capacitor-Sealed
16	32180-471	1	Cover-Chief, Bric
21	32180-400	1	Clip-Tie, Fir Tree W/Tie, 5MM/.196" Hole
22	32180-060	2	Backshell-Harnessflex, Dt06-2S 90 Degree
23	121-8861	1	Fuse-Mini Blade, 2 Amp
24	121-8865	4	Fuse-Mini Blade, 7.5 Amp
25	121-8866	3	Fuse-Mini Blade, 10 Amp
26	121-8867	1	Fuse-Mini Blade, 15 Amp
27	122-0368	2	Relay-280 ISO
33	121-8868	1	Fuse-Mini Blade, 20 Amp

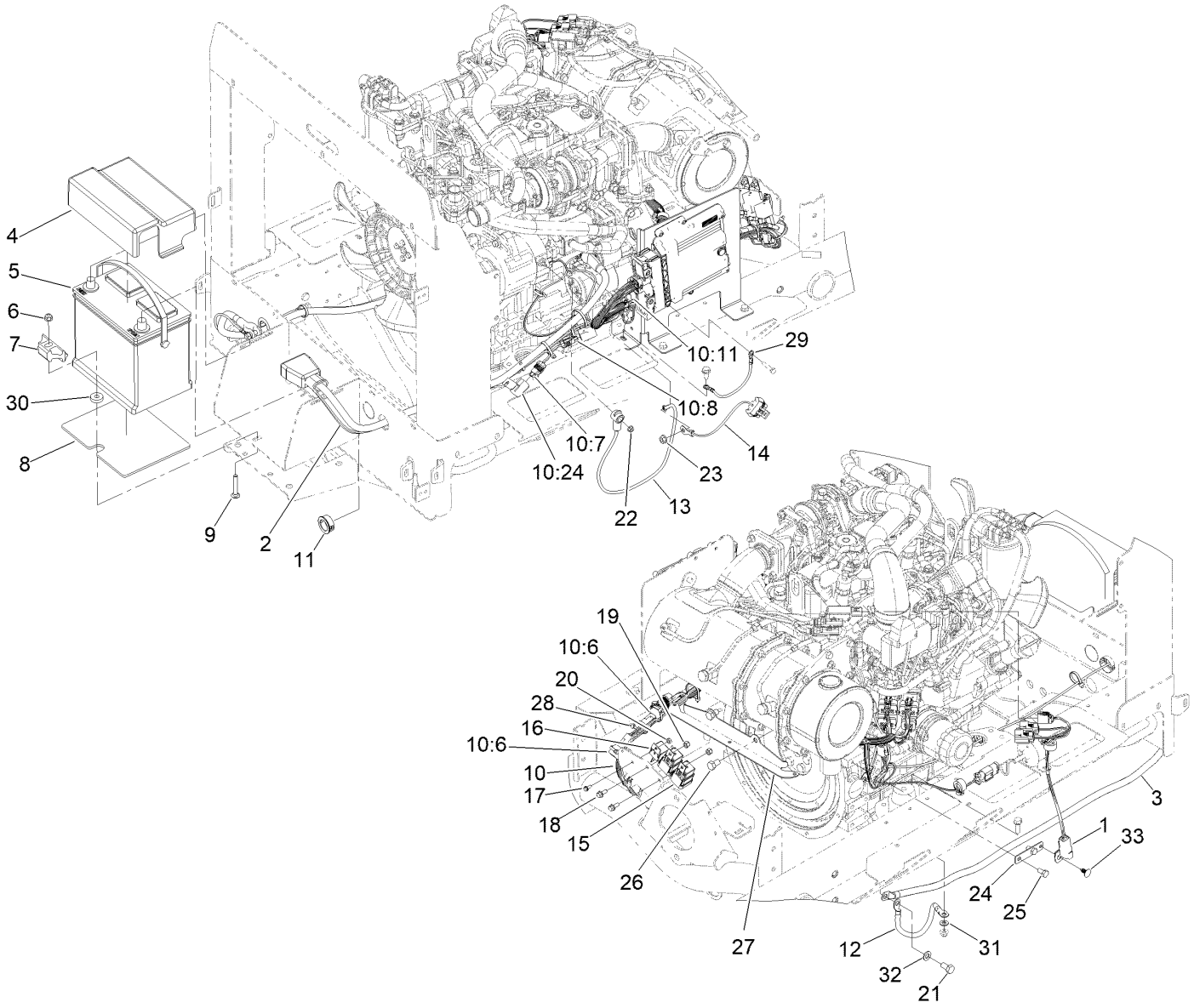

Battery Mounting Assembly

Ref.	Part Number	Qty.	Description
1	122-2910	1	Harness-Wire, Yanmar Dpf Interface
2	121-8850	1	Cable-Battery, Positive
3	121-8851	1	Cable-Battery, Negative
4	121-5615	1	Cover-Battery
5	132-8621	1	Battery - Corrosive
6	104-8300	1	Nut-HF, NI
7	138-6335	1	Retainer-Battery
8	127-2781	1	Mat-Battery
9	3230-6	1	Bolt-CARR
10	122-2911	1	Harness-Wire, Engine
10:6	100-4918	2	Diode
10:7	121-8868	1	Fuse-Mini Blade, 20 Amp
10:8	121-8866	1	Fuse-Mini Blade, 10 Amp
10:11	32160-359	1	Connector (6M)
10:24	32180-101	2	Cover-Fuse, Single
11	32180-570	2	Bushing-Panel Snap,1.00"
12	121-8856	1	Cable-Ground, Engine
13	100-5552	1	Harness-Wire
14	99-3441	1	Harness-Wire, Fusible Link

Ref.	Part Number	Qty.	Description
15	99-7430	2	Relay-Mini
16	99-7435	1	Relay
17	3290-321	1	Screw-HWH
18	3234-33	2	Screw-HHF
19	3296-42	2	Nut-Lock, NI
20	3296-2	1	Nut-Lock, NI
21	33115-020	1	Screw-HH
22	33003-00	1	Nut-HF
23	33004-00	1	Nut-HF
24	121-5636	1	Tab-Harness
25	33114-016	2	Screw-HH
26	33115-016	2	Screw-HH
27	132-9706-03	1	Bracket-Harness
28	3290-378	9	Tie-Cable
29	122-0058	1	Harness-Wire, Ground
30	62-6660	1	Spacer
31	120-9683	1	Washer-Plain
32	33095-00	1	Washer-Flat
33	117-2382	1	Plug-Plastic

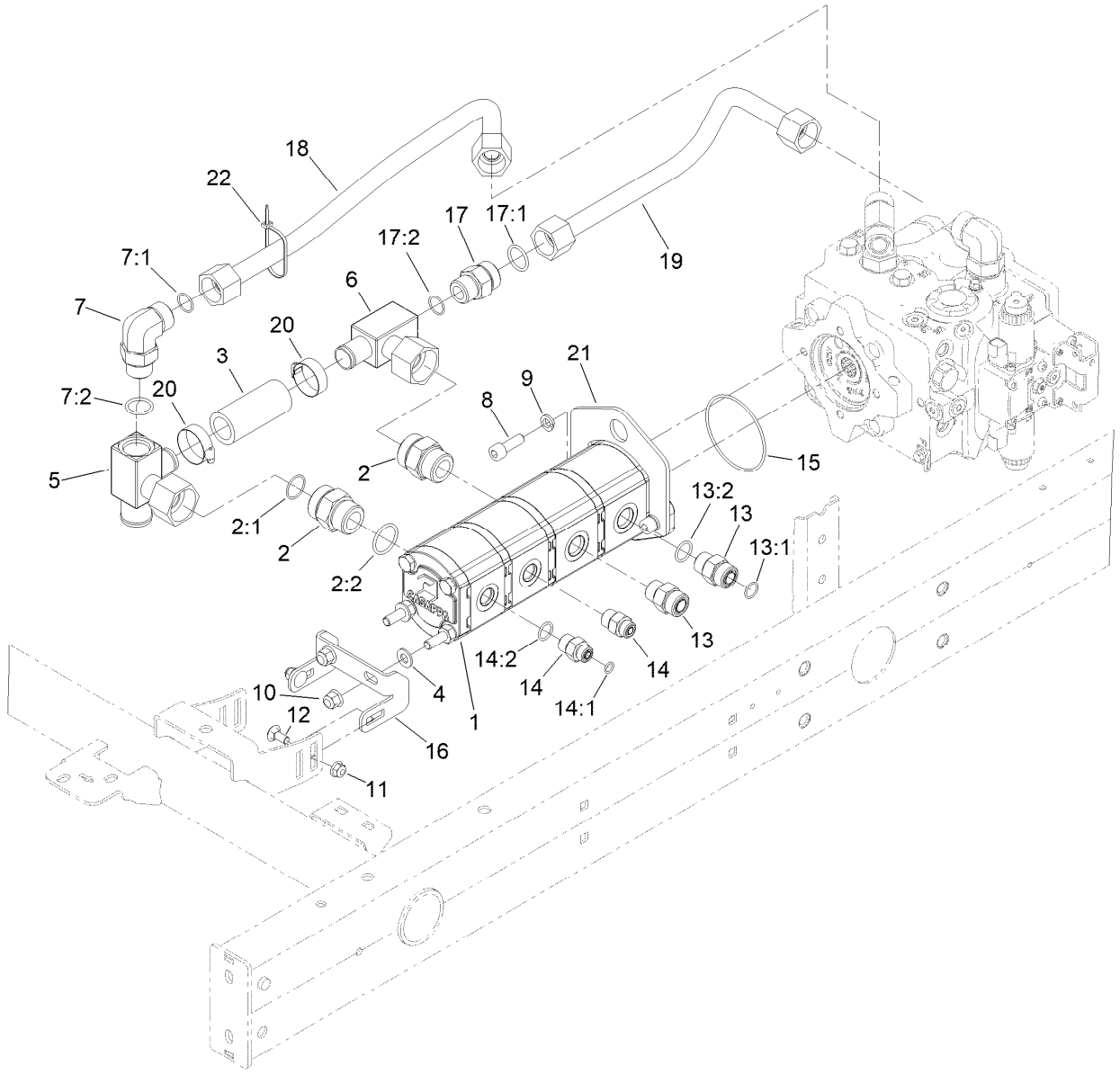

Gear Pump Assembly

Ref.	Part Number	Qty.	Description
1	107-4547	1	Gear Pump ASM
2	104-3797	2	Fitting-Straight
2:1	237-146	1	O-Ring
2:2	340-65	1	O-Ring
3	144-2092	1	Hose-Formed
4	3256-24	2	Washer-Plain
5	145-2570	1	Manifold-Tube
6	144-2093	1	Manifold-Tube
7	340-142	1	Fitting-Elbow, 90 DEG
7:1	237-58	1	O-Ring
7:2	237-81	1	O-Ring
8	ST80801	2	Screw-HSH
9	48-9590	2	Washer-Lock
10	103-9511	2	Nut-Flg
11	104-8300	2	Nut-HF, NI
12	3230-1	2	Bolt-CARR

Ref.	Part Number	Qty.	Description
13	340-7	2	Fitting-Straight
13:1	237-65	1	O-Ring
13:2	237-80	1	O-Ring
14	340-3	2	Fitting-Straight
14:1	237-22	1	O-Ring
14:2	237-79	1	O-Ring
15	237-161	1	O-Ring
16	133-2946-0P	1	Brkt-Gear Pump
17	340-9	1	Fitting-STR
17:1	237-58	1	O-Ring
17:2	237-81	1	O-Ring
18	145-2561	1	Tube ASM-Hydraulic
19	145-2454	1	Tube ASM-Hydraulic
20	2412-34	2	Clamp-Hose
21	145-2548-0P	1	Bracket-Lift, Pump
22	3290-378	1	Tie-Cable

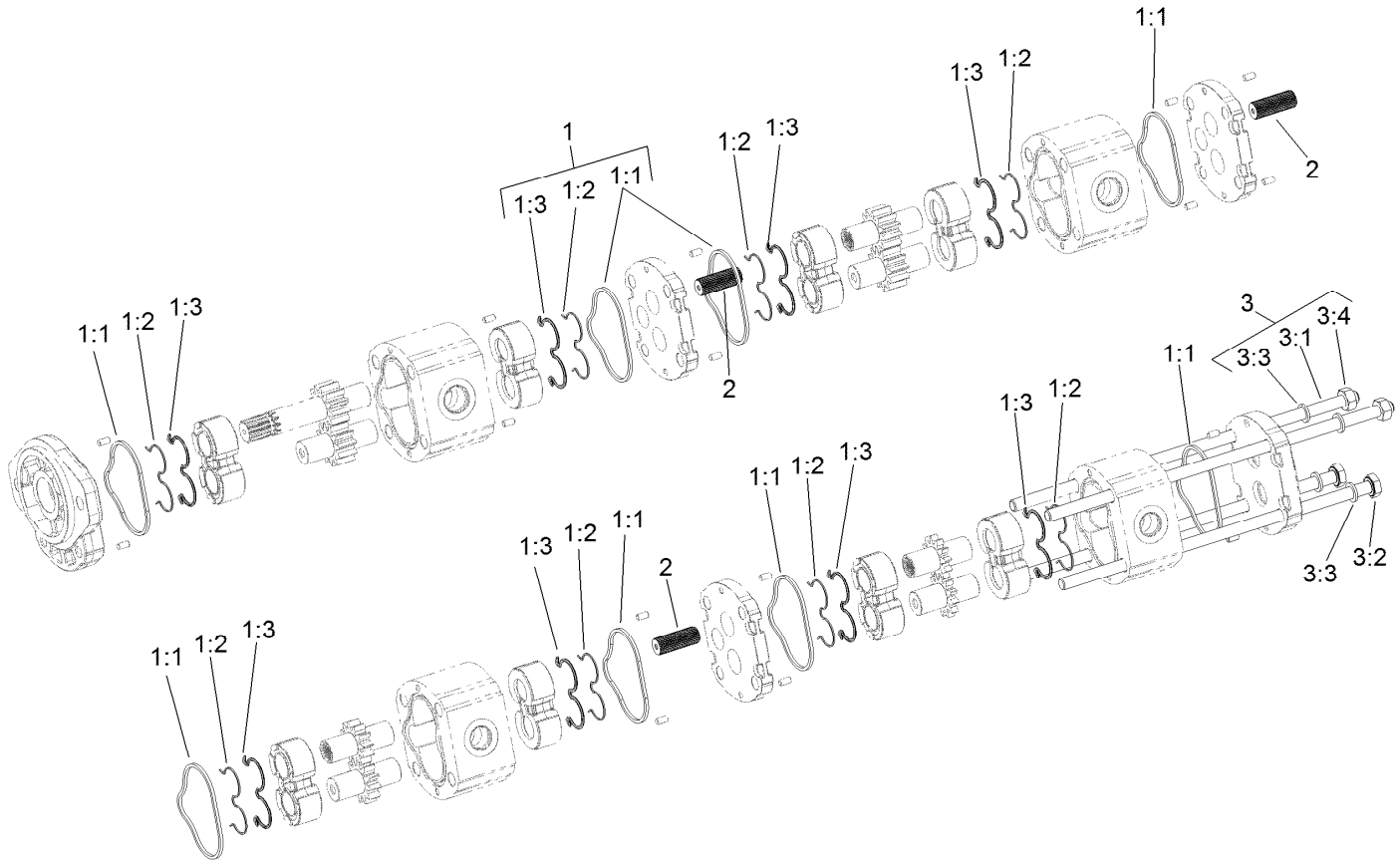

Gear Pump Assembly No. 107-4547

Ref.	*Part Number*	*Qty.*	*Description*
1	108-4595	1	Seal Kit
1:1		8	Seal ●
1:2		8	Seal ●
1:3		8	Ring-Back Up ●
2	120-6284	3	Hub-Connecting
3	125-8760	1	Kit-Bolt
3:1		2	Bolt-Stud ●
3:2		2	Screw ●
3:3		4	Washer ●
3:4		2	Nut ●

● Not serviced separately

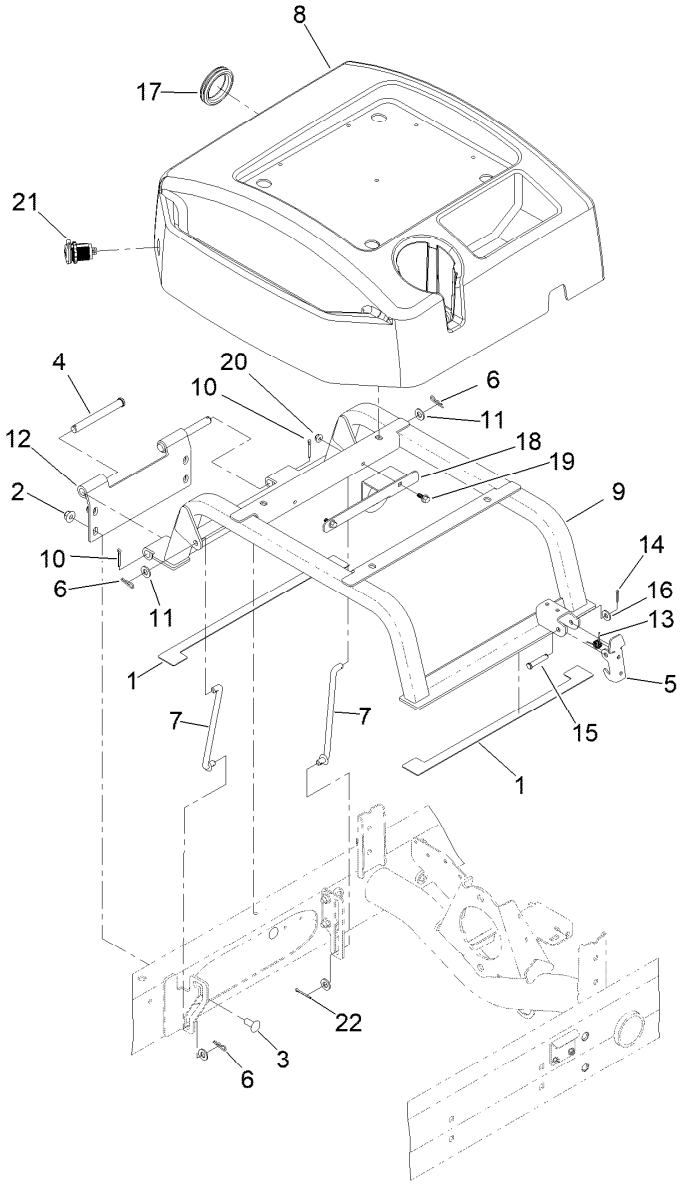

Seat Base Assembly

Ref.	*Part Number*	*Qty.*	*Description*
1	110-5255	2	Bumper-Base, Seat
2	104-8301	4	Nut-HF, NI
3	3231-27	4	Screw-CARR
4	283-83	2	Pin-Clevis
5	110-8971	1	Latch
6	3290-307	3	Pin-Cotter
7	98-0917	2	Rod-Prop
8	145-2450	1	Cover-Seatbase
9	125-2122-03	1	Seat Base ASM
10	3272-11	2	Pin-Cotter
11	3256-24	4	Washer-Plain

Ref.	*Part Number*	*Qty.*	*Description*
12	125-2121-03	1	Hinge-Seatbase
13	104-4821	1	Spring-Torsion
14	3272-6	1	Pin-Cotter
15	94-3829	1	Pin-Clevis
16	3256-2	1	Washer-Flat
17	240-12	1	Grommet-Rubber
18	145-2480-0P	1	Bracket-Harness
19	99-6810	2	Screw-HHF
20	104-7201	2	Nut-HF, NI
21	131-8388	1	Socket-USB
22	3272-4	1	Pin-Cotter

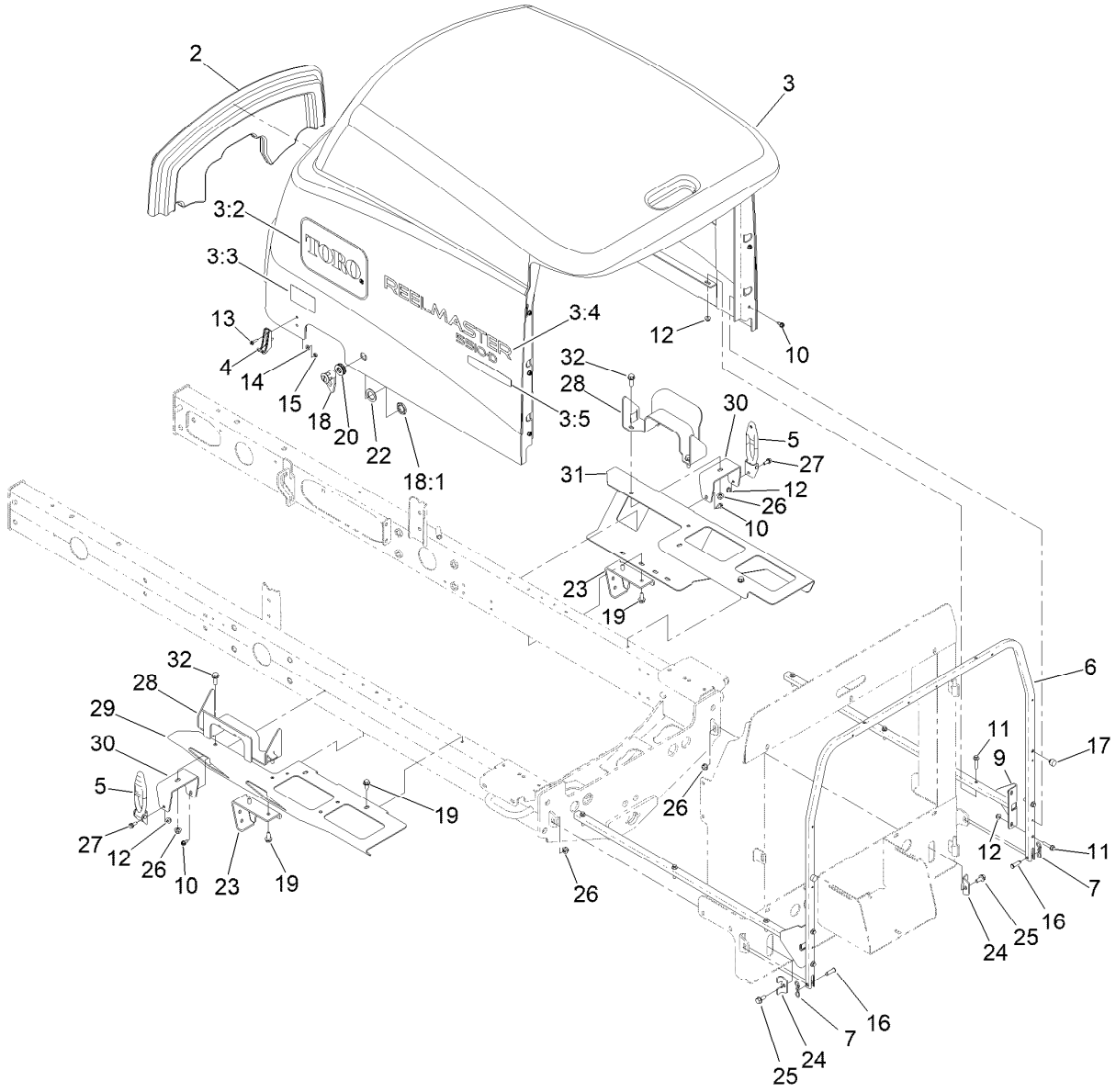

Hood Assembly

Ref.	Part Number	Qty.	Description
2	145-2456	1	Saddle-Hood
3	145-2539	1	Hood ASM (Rm5510D Service)
3:2	66-6140	2	Decal
3:3	106-6754	2	Decal-Danger
3:4	125-2929	2	Decal
3:5	121-1594	2	Decal-Smart Power
4	103-2897	2	Latch-Catch
5	103-2898	2	Latch-Rubber
6	125-8813-03	1	Tube-Frame, Hood
7	105-7512	2	Pin-Tie, Bow
9	108-1790-03	2	Tube
10	32104-17	12	Screw-HWH
11	3234-21	10	Screw-HHF
12	104-7201	12	Nut-HF, NI
13	32105-13	4	Screw-HWH
14	3256-14	4	Washer-Flat
15	3296-12	4	Nut-Lock, NI

Ref.	Part Number	Qty.	Description
16	283-61	2	Pin-Yoke
17	107-8042	2	Bumper-Rubber
18	98-5398	1	Latch
18:1	3218-20	1	Nut-Jam
19	32104-32	6	Screw-HWH
20	104-1453	1	Grommet
22	99-4958	1	Spacer
23	110-0979-03	2	Bracket-Deflector
24	110-8946	2	Clamp-Frame, Radiator
25	3234-5	2	Screw-HHF
26	104-8300	6	Nut-HF, NI
27	3234-33	2	Screw-HHF
28	121-5627-03	2	Guide-Hood
29	110-5253-01	1	Adapter-Hood, LH
30	110-5256-01	2	Bracket-Latch, Hood
31	110-5254-01	1	Adapter-Hood, RH
32	3234-17	4	Screw-HHF

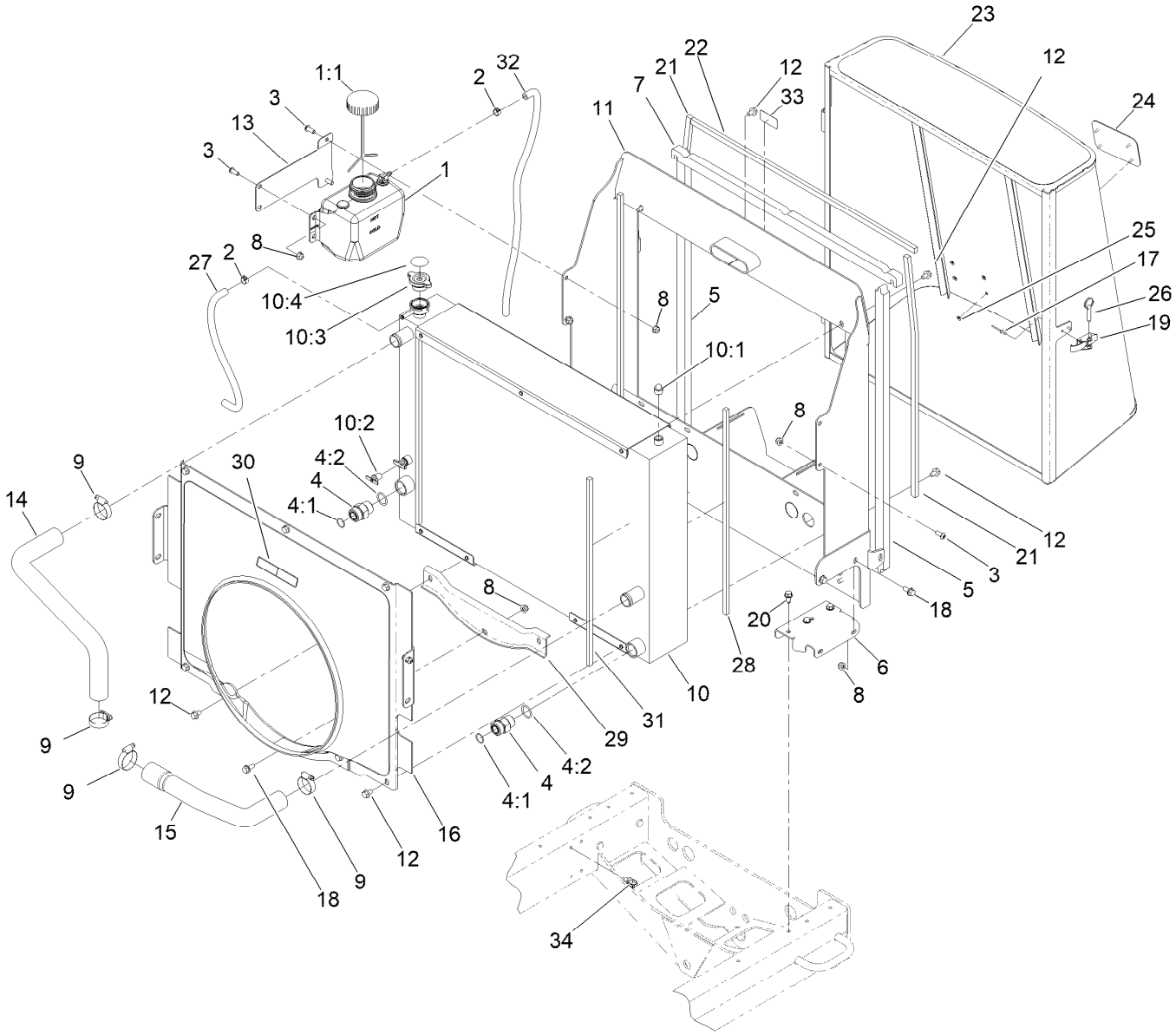

Radiator Assembly

Ref.	Part Number	Qty.	Description
1	120-5573	1	Coolant Reservoir ASM
1:1	87-7050	1	Cap-Reservoir
2	92-2379	3	Clamp-Hose
3	3274-55	5	Screw-HSBH
4	340-9	2	Fitting-STR
4:1	237-58	1	O-Ring
4:2	237-81	1	O-Ring
5	121-5554	2	Seal-Foam
6	110-5310-0P	2	Bracket - Mounting
7	110-5276	2	Seal-Foam
8	104-8300	10	Nut-HF, NI
9	2412-3	4	Clamp-Hose
10	120-3840	1	Oil Cooler And Radiator ASM
10:1	281-13	1	Plug-Pipe
10:2	304-46	1	Draincock
10:3	93-5957	1	Cap-Radiator
10:4	106-6755	1	Decal-Cap, Radiator
11	120-3815-03	1	Frame-Radiator
12	3234-30	14	Screw-HHF
13	121-5568-0P	1	Bracket-Resevoir

Ref.	Part Number	Qty.	Description
14	133-2994	1	Hose-Formed
15	121-5558	1	Hose-Radiator, Lower
16	125-2904	1	Shroud-Fan, Diesel
17	3269-15	2	Rivet-Pop
18	3234-5	5	Screw-HHF
19	115-1554	1	Latch-Draw
20	32104-32	6	Screw-HWH
21	121-5575	2	Seal-Foam
22	121-5576	1	Seal-Foam
23	120-3844-03	1	Screen
24	93-6028	1	Plate-Logo
25	138-6996	4	Nut-Push
26	115-1556	1	Pin-Ball, Detent
27	110-8752	1	Hose-Fuel
28	110-0969	2	Seal-Foam
29	125-2905	1	Cap-Shroud, Diesel
30	93-7272	1	Decal-Warning
31	125-8767	2	Seal-Foam
32	110-3257	1	Hose-Fuel
33	137-8127	1	Decal-No Spray
34	32180-030	1	Clip-Tie

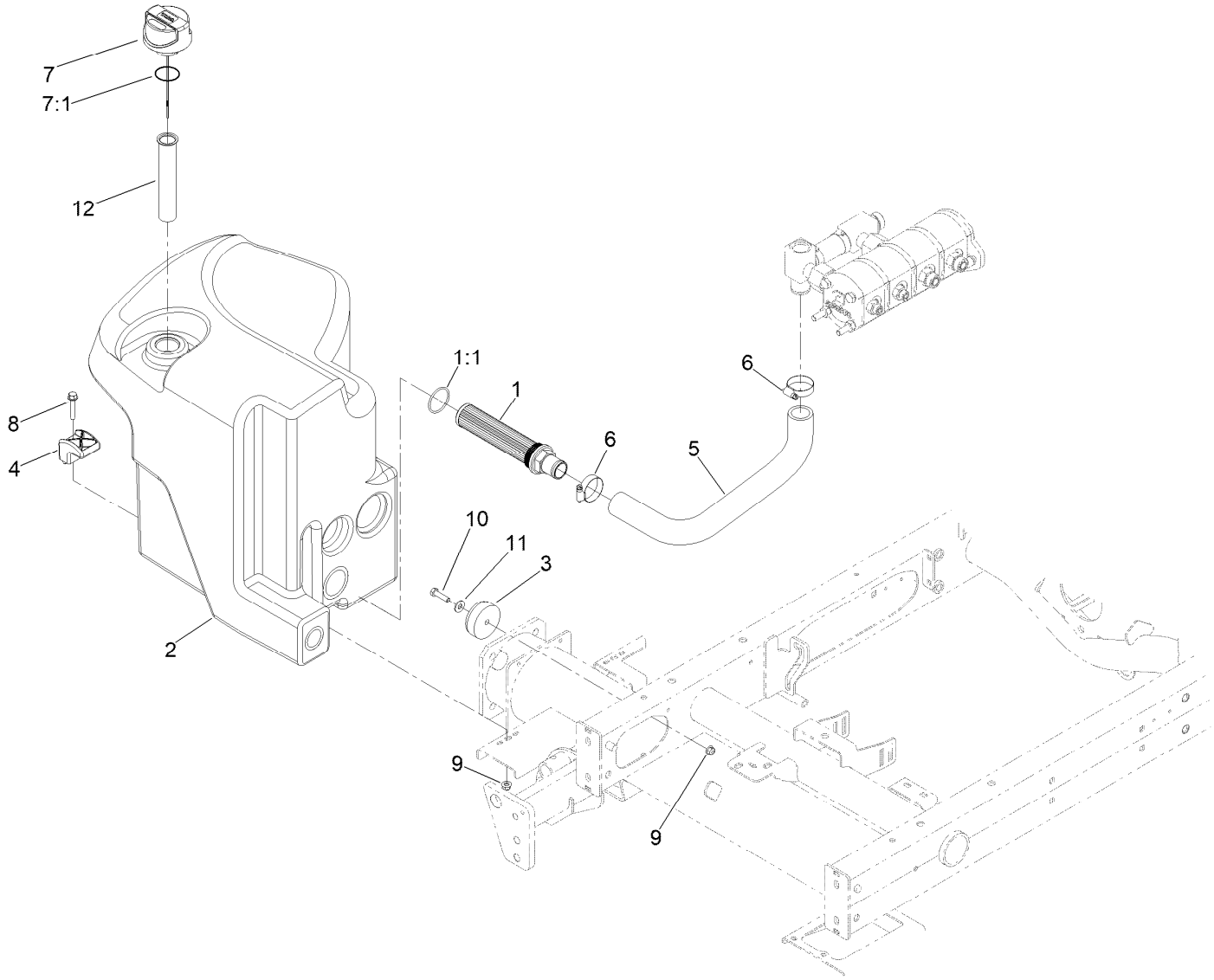

Hydraulic Tank Assembly

Ref.	*Part Number*	*Qty.*	*Description*
1	145-2463	1	Strainer-Tank, Hydraulic
1:1	340-136	1	O-Ring
2	145-2487	1	Tank-Hydraulic
3	108-1605	1	Bumper-Recess
4	107-4543	2	Clamp
5	144-2076	1	Hose-Suction
6	2412-3	2	Clamp-Hose
7	117-0193	1	Cap-Hydraulic, Vented Breather
7:1	237-101	1	O-Ring
8	94-5780	2	Screw-HWH
9	104-8300	3	Nut-HF, NI
10	322-6	1	Screw-HH
11	3256-3	1	Washer-Flat
12	61-2790	1	Filter-Screen

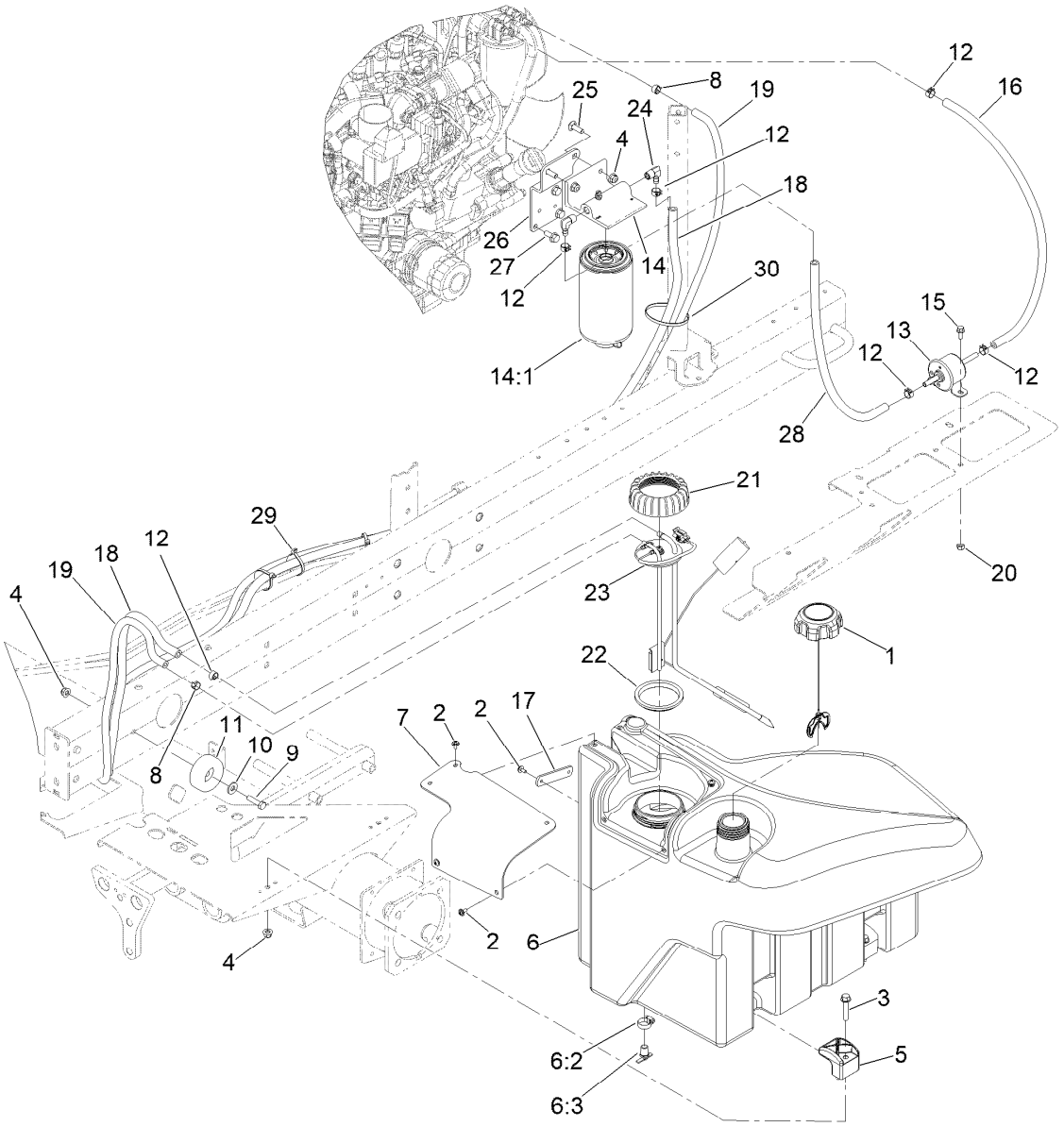

Fuel System Assembly

Ref.	Part Number	Qty.	Description
1	125-9173	1	Cap-Fuel, Diesel, Ultra Low Sulfur
2	109-2661	7	Screw-PPH
3	94-5780	2	Screw-HWH
4	104-8300	5	Nut-HF, NI
5	107-4543	2	Clamp
6	125-2907	1	Fuel Tank ASM
6:2	2412-36	1	Clamp-Hose
6:3	304-46	1	Draincock
7	125-2903	1	Cover-Pump/Sender
8	2412-98	1	Clamp-Hose
9	322-6	1	Screw-HH
10	3256-3	1	Washer-Flat
11	108-1605	1	Bumper-Recess
12	92-2379	7	Clamp-Hose
13	121-5613	1	Pump-Fuel, Electric
14	125-2914	1	Filter-Separator

Ref.	Part Number	Qty.	Description
14:1	125-2915	1	Filter-Fuel/Water Separator
15	3234-33	2	Screw-HHF
16	109-0308	1	Hose-Fuel
17	125-2945	1	Strap-Cable
18	161-8378	1	Hose-Fuel
19	161-8380	1	Hose-Fuel
20	3296-42	2	Nut-Lock, NI
21	140-6245	1	Cap-Pump, Fuel
22	140-6246	1	Gasket-Pump, Fuel,
23	121-5642	1	Sender-Fuel
24	353-781	2	Fitting-HYD, 90
25	3230-22	2	Screw-CARR
26	120-6299-0P	1	Bracket-Separator
27	33104-020	3	Screw-HHF
28	109-0274	1	Hose-Fuel
29	3290-378	4	Tie-Cable
30	3290-379	1	Tie-Cable

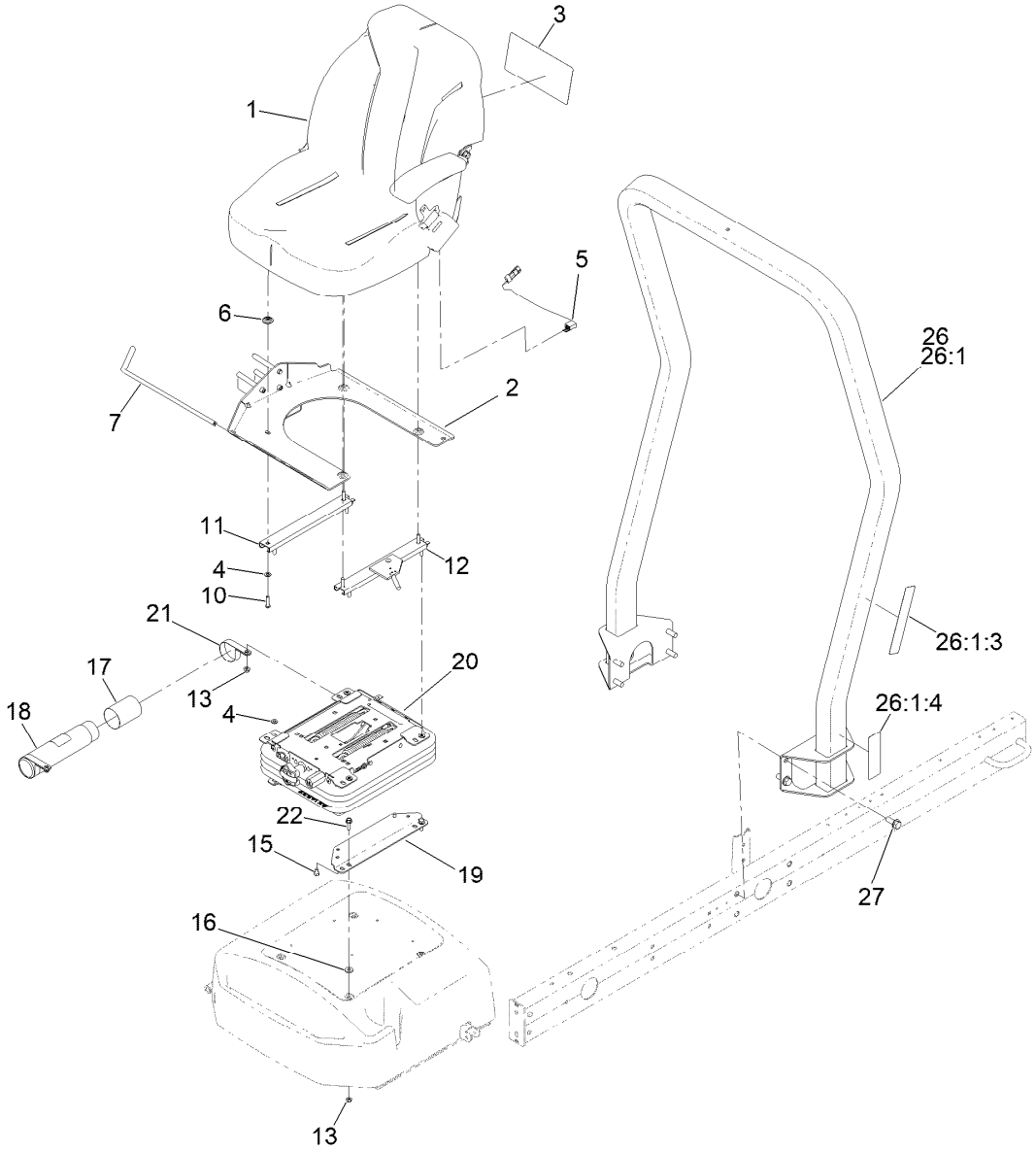

Seat and Roll-Over Protection System Assembly

Ref.	Part Number	Qty.	Description
1	139-2700	1	Seat ASM
2	138-6985-03	1	Mount-Seat
3	145-2573	1	Decal-Service
4	3256-23	8	Washer-Plain
5	108-8657	1	Harness-Wire, Seat
6	136-9002	4	Spacer-Mounting
7	130-7100	1	Trim-Seatbase
10	3290-511	4	Screw-HSBH
11	92-8990	1	Adjuster-Seat, Non-Locking
12	92-8991	1	Adjuster (W/Latch)
13	104-8300	8	Nut-HF, NI
15	48-7680	4	Screw-HH

Ref.	Part Number	Qty.	Description
16	71-9310	4	Spacer
17	104-7048	1	Cap-Housing
18	104-7050	1	Tube-Manual
19	108-6590-0P	2	Bracket-Seat, Lower
20	145-5295	1	Suspension ASM
21	2412-133	2	Clamp-R
22	3234-17	4	Screw-HHF
26	136-7954	1	ROPS ASM
26:1		1	ROPS ASM ●
26:1:3	136-3702	1	Decal-Safety, ROPS
26:1:4	136-2159	1	Decal-Seat Service
27	3234-38	8	Screw-HHF

● Not serviced separately

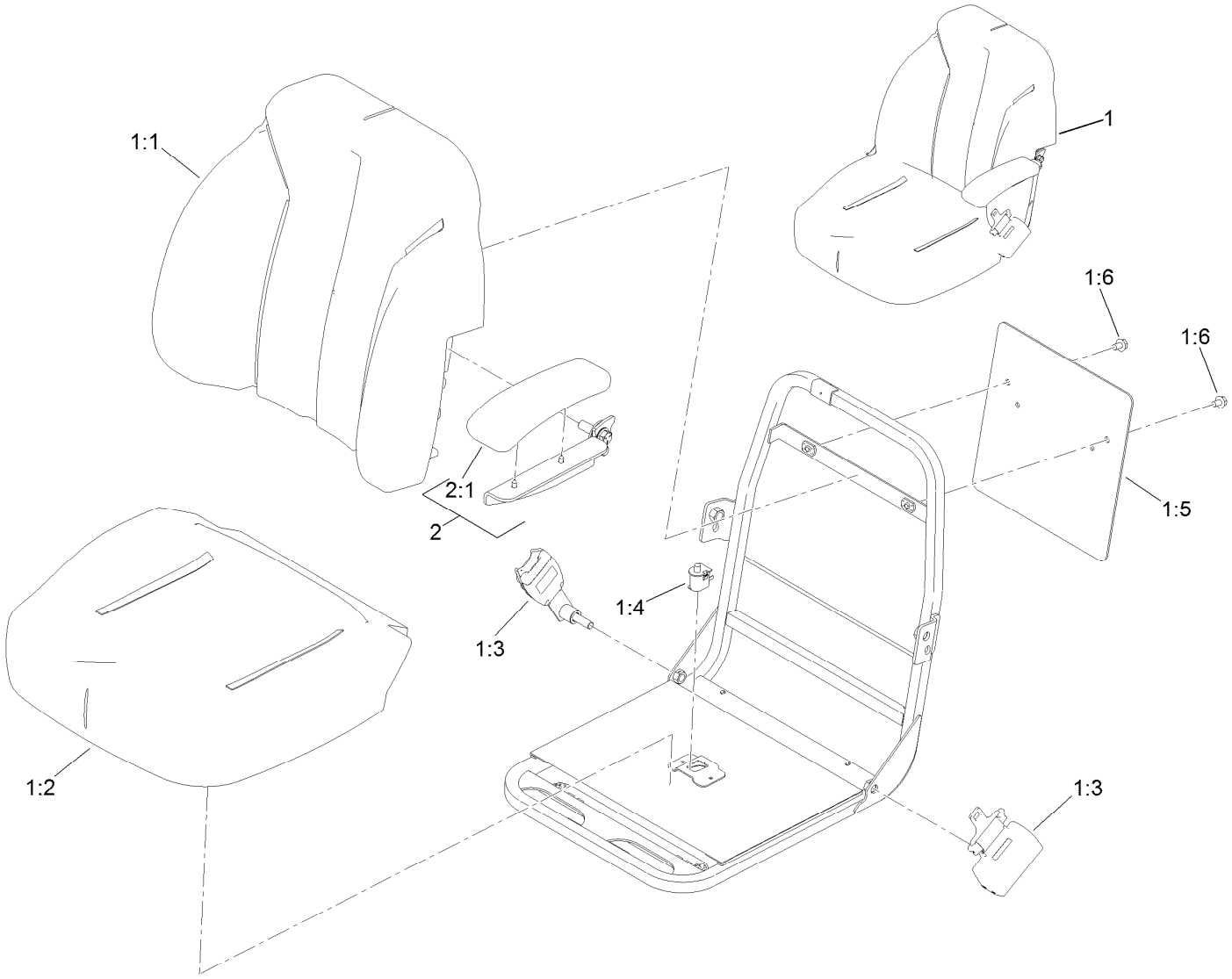

Seat Assembly No. 139-2700

Ref.	*Part Number*	*Qty.*	*Description*
1	139-2680	1	Seat ASM
1:1	145-0083	1	Cover-Seat, Back
1:2	145-0084	1	Cover-Seat, Bottom
1:3	139-2707	1	Seat Belt Kit
1:4	82-2190	1	Switch-Bail
1:5	139-2701	1	Plate-Decal
1:6	3234-30	2	Screw-HHF
2	121-3660	1	LH Arm Rest Kit
2:1	110-4163	1	Cushion-Rest, Arm

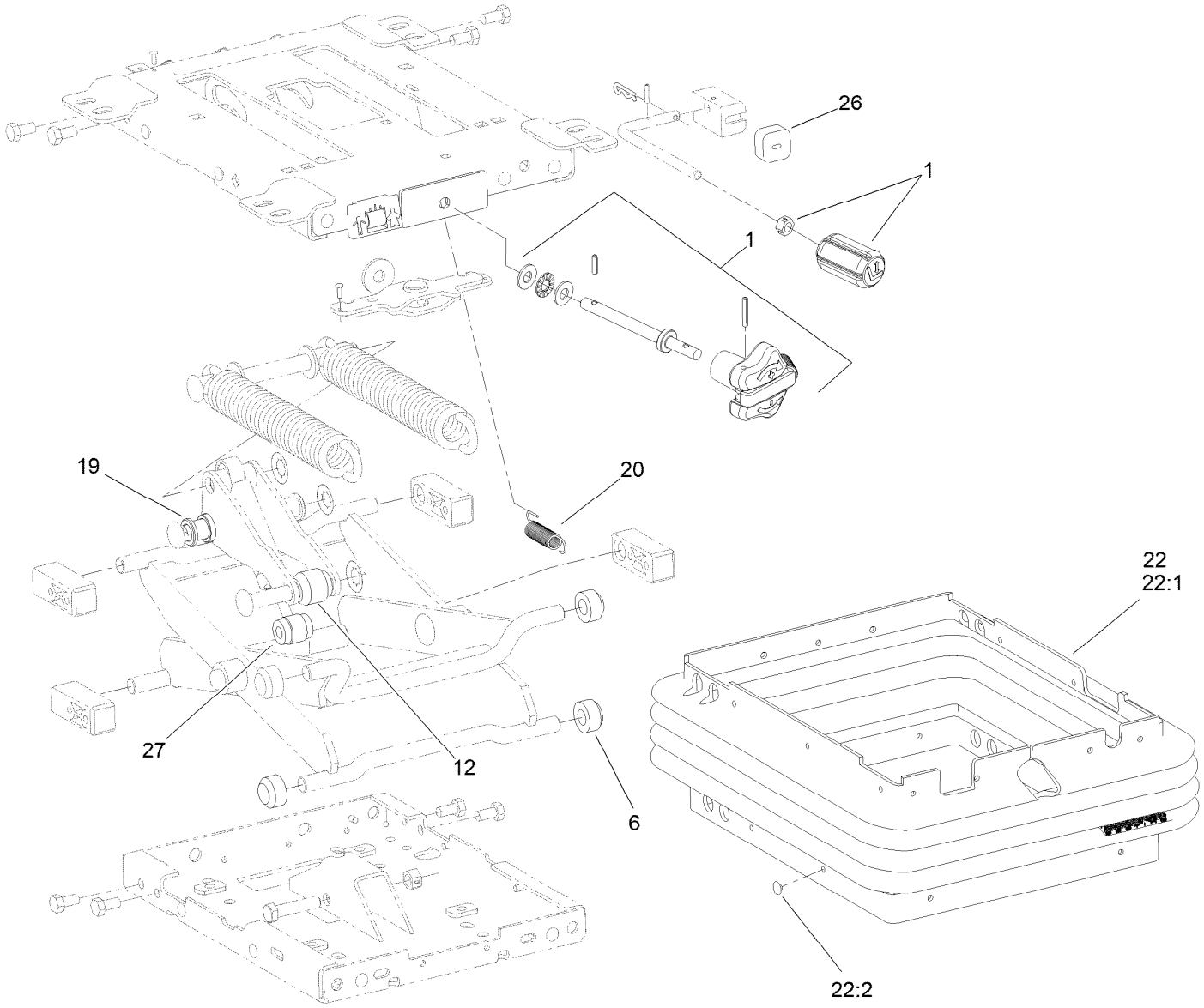

Mechanical Seat Suspension Assembly No. 145-5295

Ref.	*Part Number*	*Qty.*	*Description*
1	145-5296	1	Knob Service Kit
6	108-9632	4	Roller
12	145-5297	1	Roller-Plastic, 36MM
19	108-9622	2	Tube
20	108-9633	1	Spring-Extension
22	112-0164	1	Boot Kit
22:1		1	Boot-Suspension ●
22:2	108-9641	21	Clip-Plug
26	108-9634	1	Bumper
27	108-9614	1	Damper

● Not serviced separately

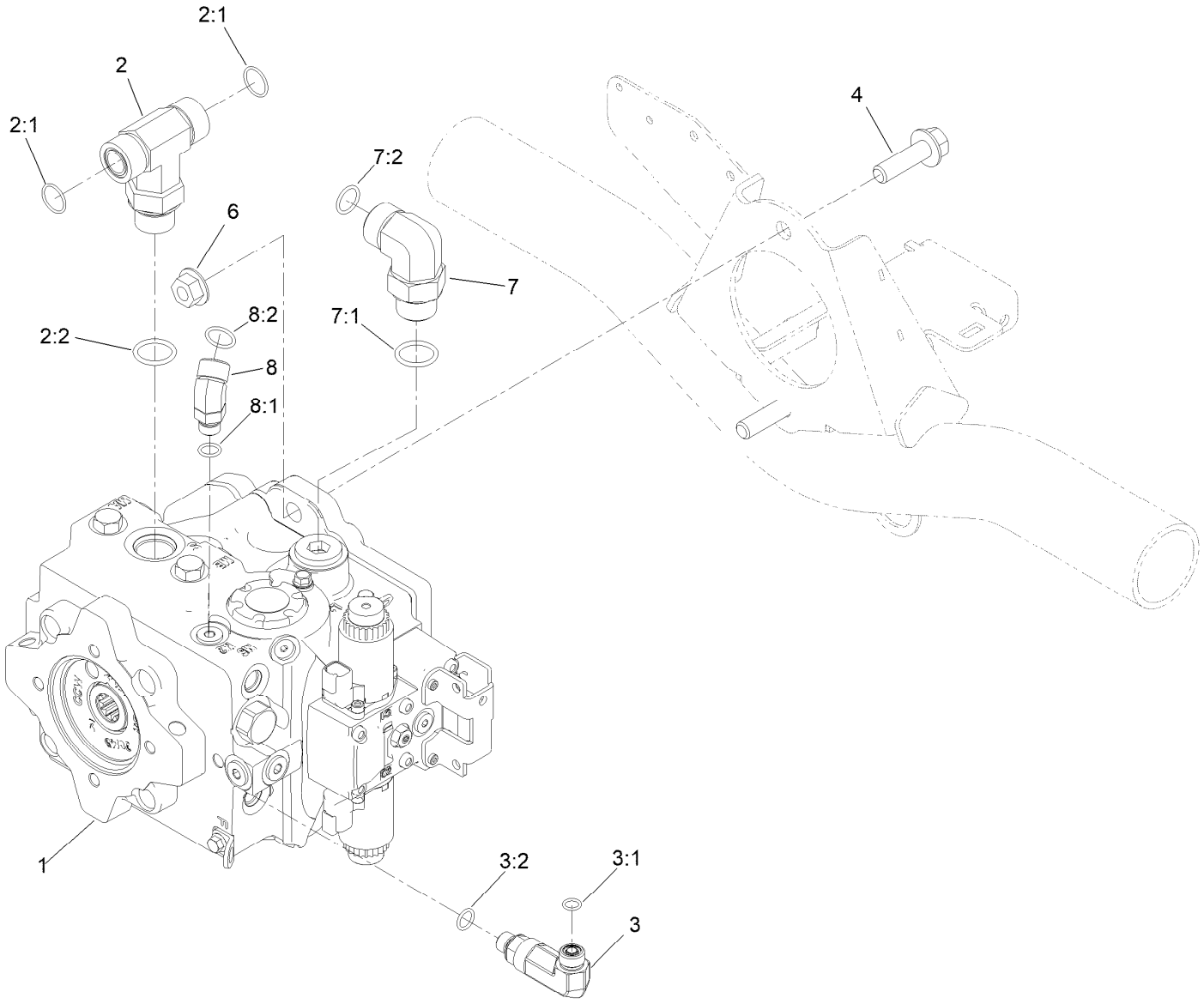

Traction Pump Mounting Assembly

Ref.	*Part Number*	*Qty.*	*Description*
1	144-2060	1	Pump-Hydraulic
2	104-4836	1	Fitting-Tee
2:1	237-58	2	O-Ring
2:2	237-81	1	O-Ring
3	145-2645	1	Fitting-Elbow 90 Long
3:1	237-22	1	O-Ring
3:2	237-42	1	O-Ring
4	130-6481	2	Screw-HHF
6	32128-49	2	Nut-HHF
7	340-142	1	Fitting-Elbow, 90 DEG
7:1	237-58	1	O-Ring
7:2	237-81	1	O-Ring
8	340-96	1	Adapter
8:1	237-30	1	O-Ring
8:2	237-42	1	O-Ring

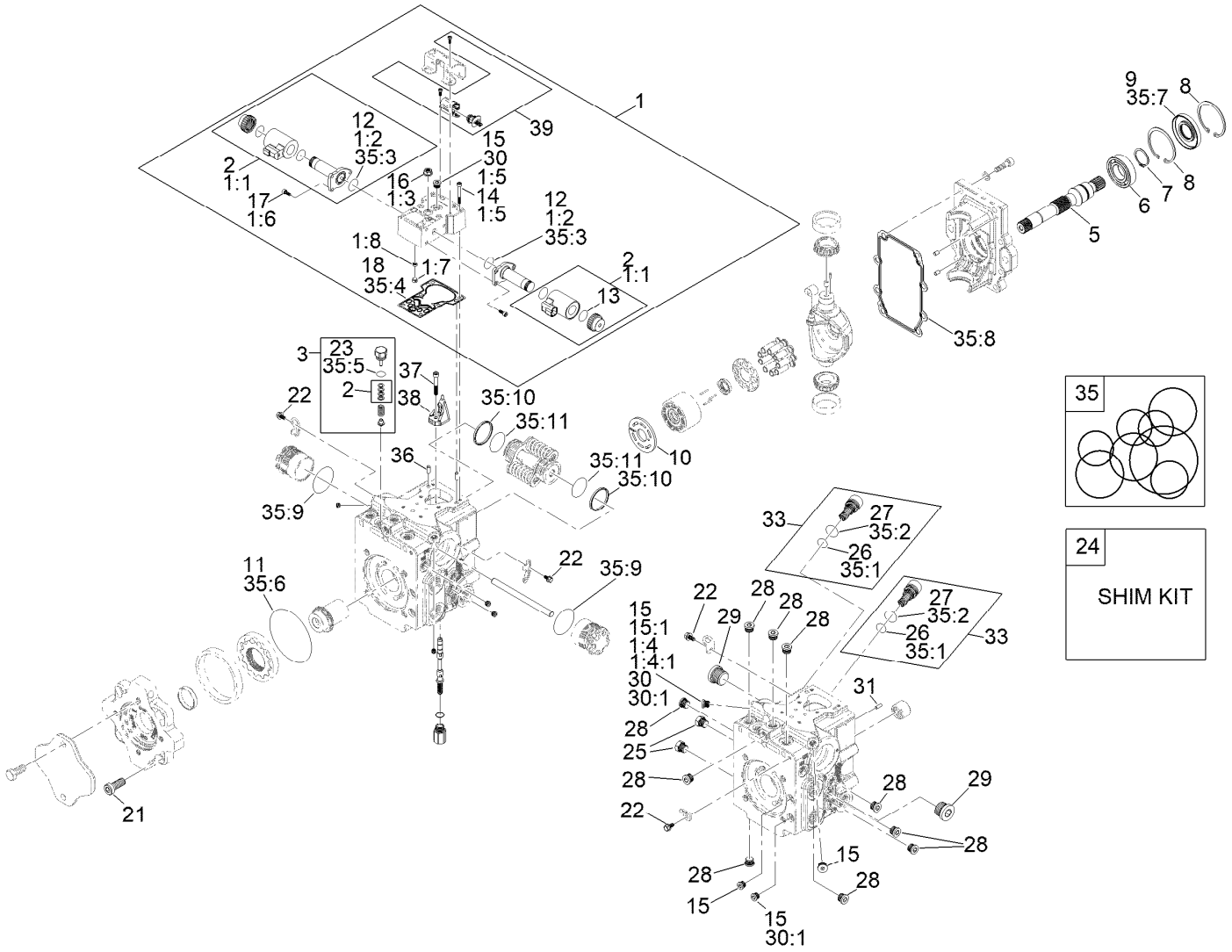

Hydraulic Pump Assembly No. 144-2060

Ref.	Part Number	Qty.	Description
1	136-3209	1	Control Kit (12 Volt)
1:1	132-6204	2	Coil Kit
1:2	125-5288	2	O-Ring
1:3	125-5273	1	Nut-Seal
1:4	75-0170	1	Plug-Thread, Straight
1:4:1	92-8777	1	O-Ring
1:5	125-5274	6	Screw
1:6	125-5272	6	Screw
1:7	136-3213	1	Gasket-Control
1:8	136-3218	1	Sensor Kit
2	125-5294	2	Coil Kit
3	161-7203	1	Charge Relief Valve
5	139-4811	1	Shaft-13Tooth
6	139-4820	1	Bearing-Ball
7	139-4806	1	Ring-Retaining
8	139-4831	2	Ring-Retaining
9	161-7202	1	Oil Seal-Black
10	139-4813	1	Plate-Valve

Ref.	Part Number	Qty.	Description
11	161-7206	1	O-Ring As568-244 Nbr90
12	125-5288	2	O-Ring
13	131-7388	2	O-Ring
14	125-5274	6	Screw
15	75-0170	4	Plug-Thread, Straight
15:1	92-8777	1	O-Ring
16	161-7200	1	Nut-Hex Seal
17	125-5272	6	Screw
18	125-5283	1	Gasket-Control
21	125-5282	4	Screw
22	125-5270	4	Screw
23	125-5298	1	O-Ring
24	92-1353	1	Shim Kit
25	136-1026	1	Plug ASM
26	75-0240	2	O-Ring
27	84-0560	2	O-Ring
28	69-3080	10	Plug
29	69-3130	1	Plug

● Not illustrated

■ Not serviced separately

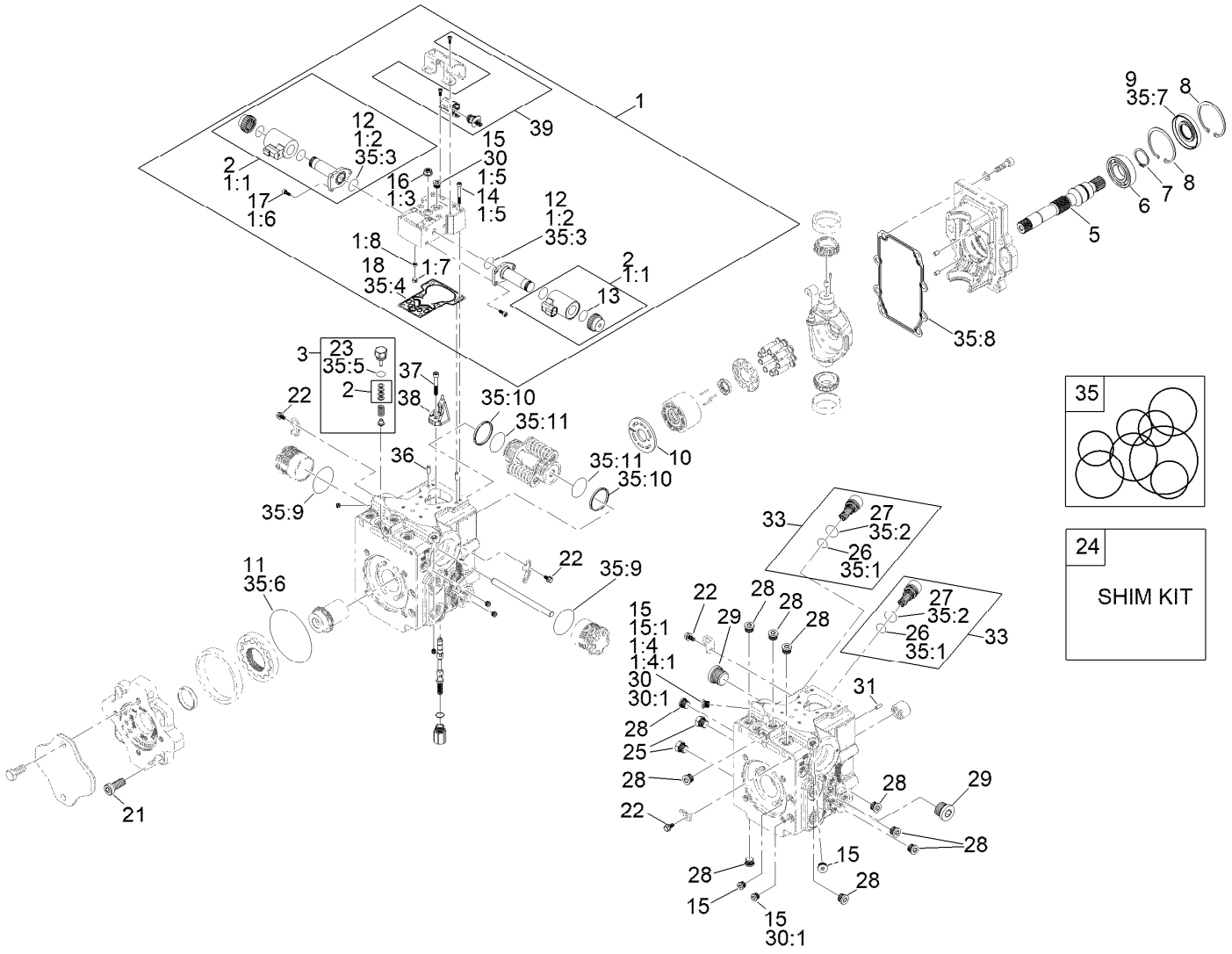

Hydraulic Pump Assembly No. 144-2060 (continued)

Ref.	Part Number	Qty.	Description
30	75-0170	4	Plug-Thread, Straight
30:1	92-8777	1	O-Ring
31	75-0510	1	Pin
33	161-7204	1	Valve-Scr Assembly 260 Bar (3770 PSI)
35	132-6205	1	Overhaul Seal Kit
35:1	75-0240	2	O-Ring
35:2	84-0560	2	O-Ring
35:3	125-5288	2	O-Ring
35:4	125-5283	1	Gasket-Control
35:5	125-5298	1	O-Ring
35:6	132-6206	1	O-Ring
35:7	127-6214	1	Seal-Lip
35:8		1	Gasket ■
35:9		2	O-Ring ■
35:10		2	Piston Ring ■
35:11		2	O-Ring ■
36	136-3215	2	Pin
37	136-3216	1	Screw, M6 X 35
38	136-3217	1	Link - Swashplate Feedback
39	136-3218	1	Sensor Kit ●

● Not illustrated

■ Not serviced separately

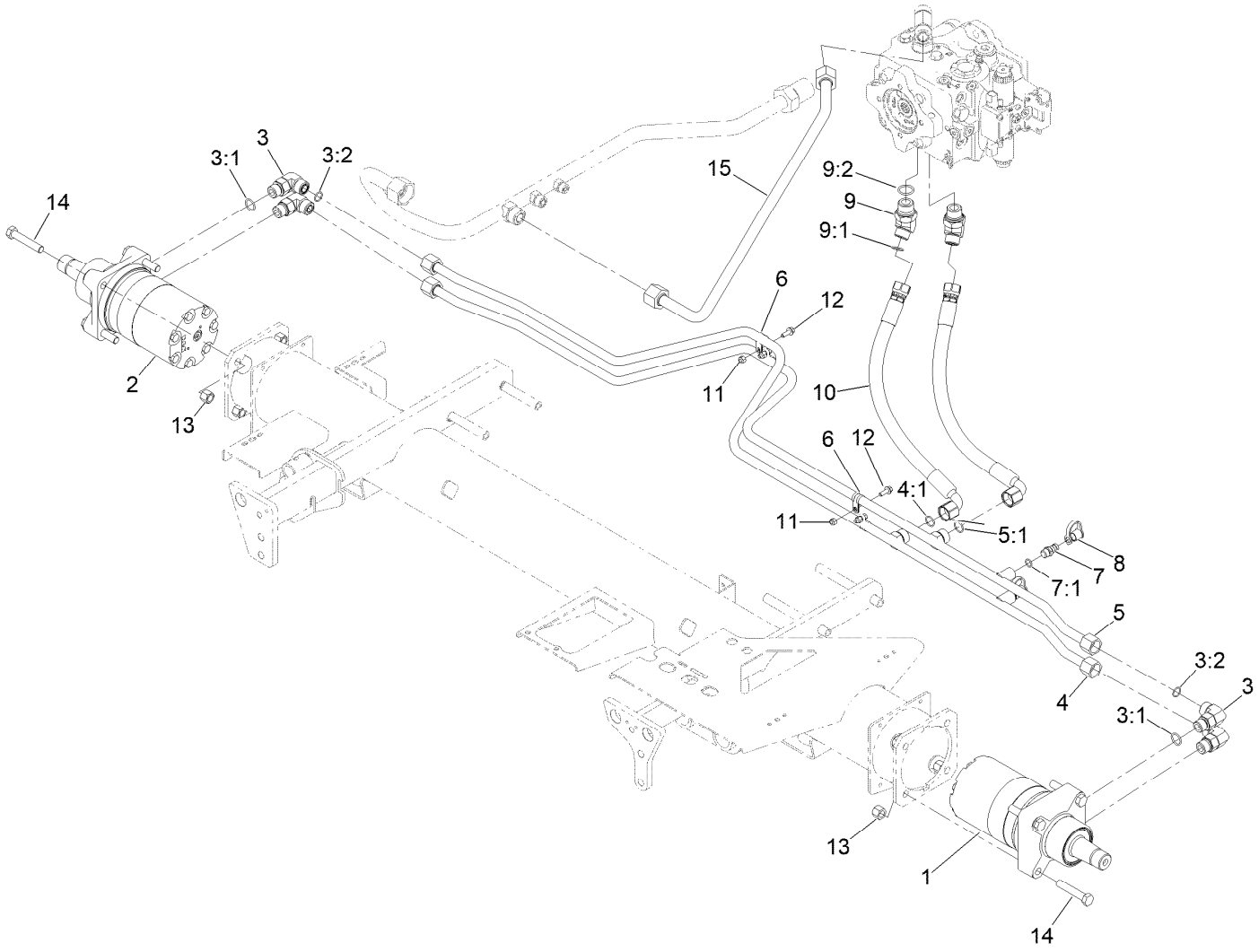

Traction Hydraulic Assembly

Ref.	Part Number	Qty.	Description
1	139-6038	1	Hydraulic Motor ASM
2	139-6039	1	Hydraulic Motor ASM
3	340-17	4	Fitting-Elbow, 90 DEG
3:1	237-65	1	O-Ring
3:2	237-80	1	O-Ring
4	108-7632	1	Hydraulic Tube ASM
4:1	237-65	1	O-Ring
5	108-7633	1	Tube ASM
5:1	237-65	1	O-Ring
6	2412-134	4	Clamp-R
7	59-7410	2	Fitting-Diagnostic

Ref.	Part Number	Qty.	Description
7:1	237-42	1	O-Ring
8	354-79	2	Cap-Dust
9	340-156	2	Fitting-Elbow 45
9:1	237-65	1	O-Ring
9:2	237-81	1	O-Ring
10	108-1679	2	Hose-HYD
11	3296-42	4	Nut-Lock, NI
12	3234-4	4	Screw-HHF
13	3296-23	8	Nut-Lock, NI
14	325-11	8	Screw-HH
15	145-2560	1	Hydraulic Tube ASM

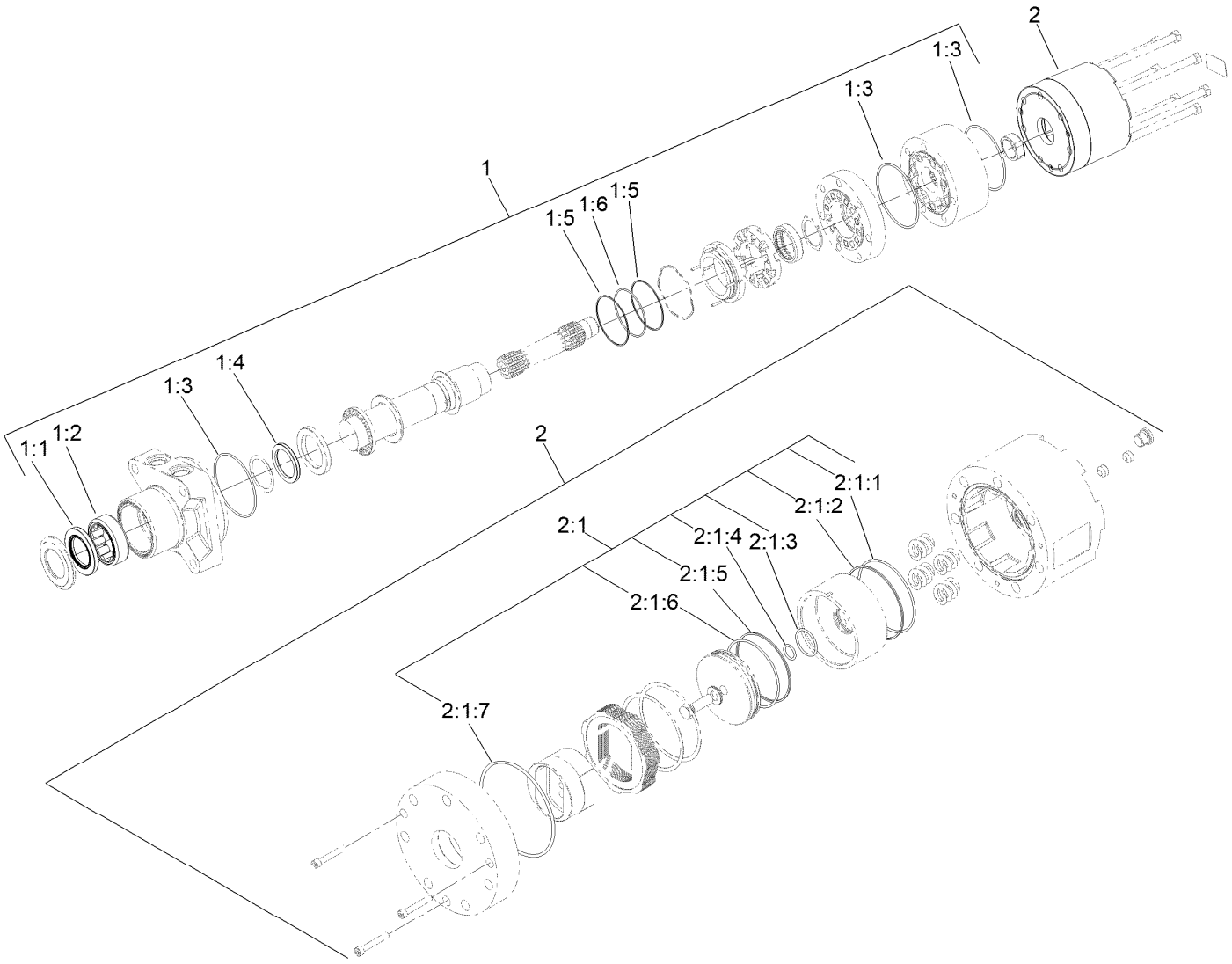

Hydraulic Motor Assembly No. 139-6038

Ref.	Part Number	Qty.	Description
1	161-7208	1	Seal Kit
1:1	161-7209	1	Seal, Grease
1:2	161-7210	1	Shell, Bearing
1:3	161-7211	3	O-Ring
1:4	161-7212	1	Shaft Seal (HP)
1:5	161-7213	2	Back-Up Ring
1:6	161-7214	1	O-Ring
2	145-2597	1	Brake Housing ASM
2:1	161-8366	1	Seal Kit-Brake ASM

Ref.	Part Number	Qty.	Description
2:1:1	161-8367	1	O-Ring
2:1:2	161-8368	1	Backup Ring
2:1:3	161-8369	1	O-Ring
2:1:4	161-8370	1	O-Ring
2:1:5	161-8371	1	Backup Ring
2:1:6	161-8372	1	O-Ring
2:1:7	161-7211	1	O-Ring
2:1:8	161-8373	1	O-Ring ●

● Not illustrated

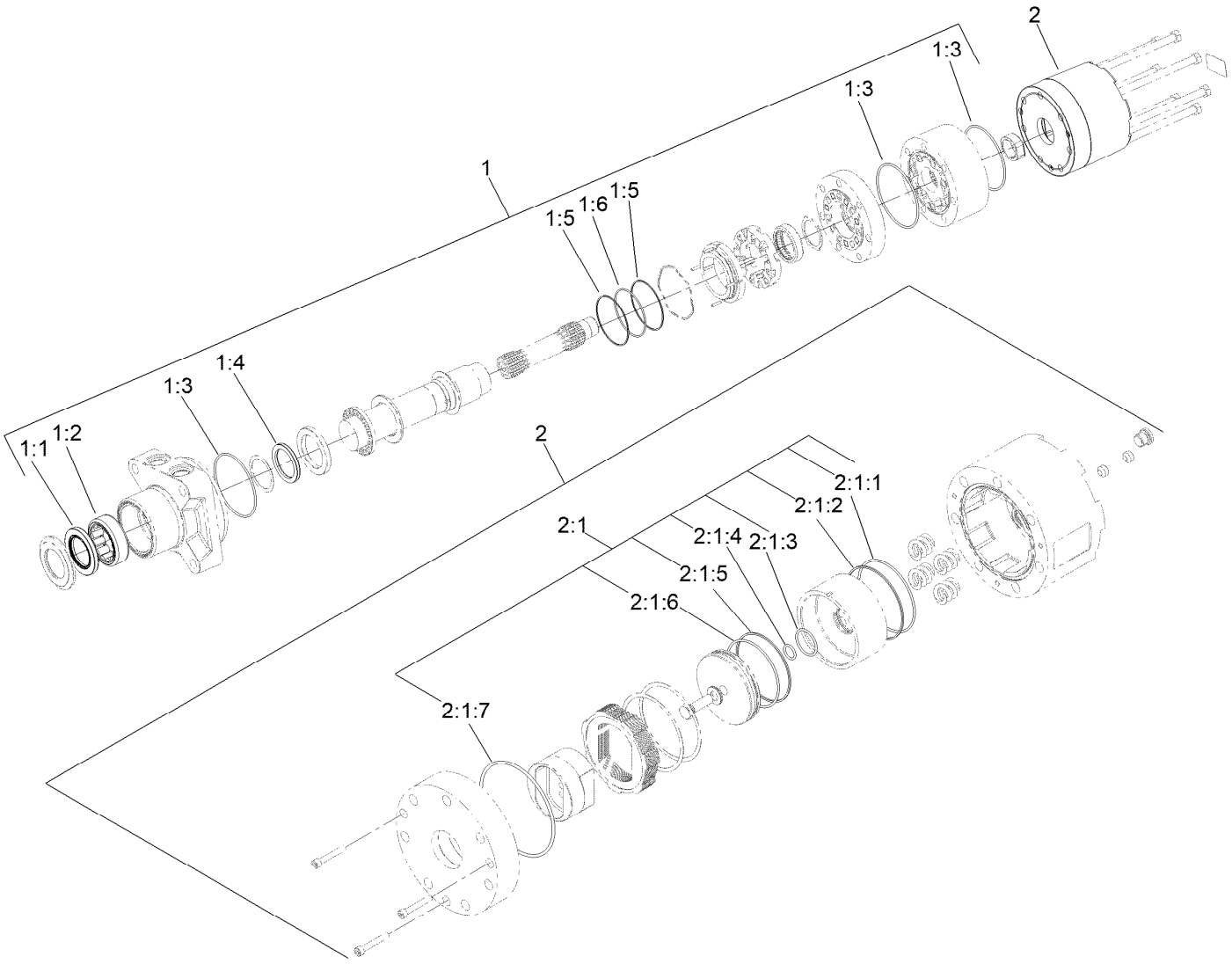

Hydraulic Motor Assembly No. 139-6039

Ref.	Part Number	Qty.	Description
1	161-7208	1	Seal Kit
1:1	161-7209	1	Seal, Grease
1:2	161-7210	1	Shell, Bearing
1:3	161-7211	3	O-Ring
1:4	161-7212	1	Shaft Seal (HP)
1:5	161-7213	2	Back-Up Ring
1:6	161-7214	1	O-Ring
2	145-2597	1	Brake Housing ASM
2:1	161-8366	1	Seal Kit-Brake ASM

Ref.	Part Number	Qty.	Description
2:1:1	161-8367	1	O-Ring
2:1:2	161-8368	1	Backup Ring
2:1:3	161-8369	1	O-Ring
2:1:4	161-8370	1	O-Ring
2:1:5	161-8371	1	Backup Ring
2:1:6	161-8372	1	O-Ring
2:1:7	161-7211	1	O-Ring
2:1:8	161-8373	1	O-Ring ●

● Not illustrated

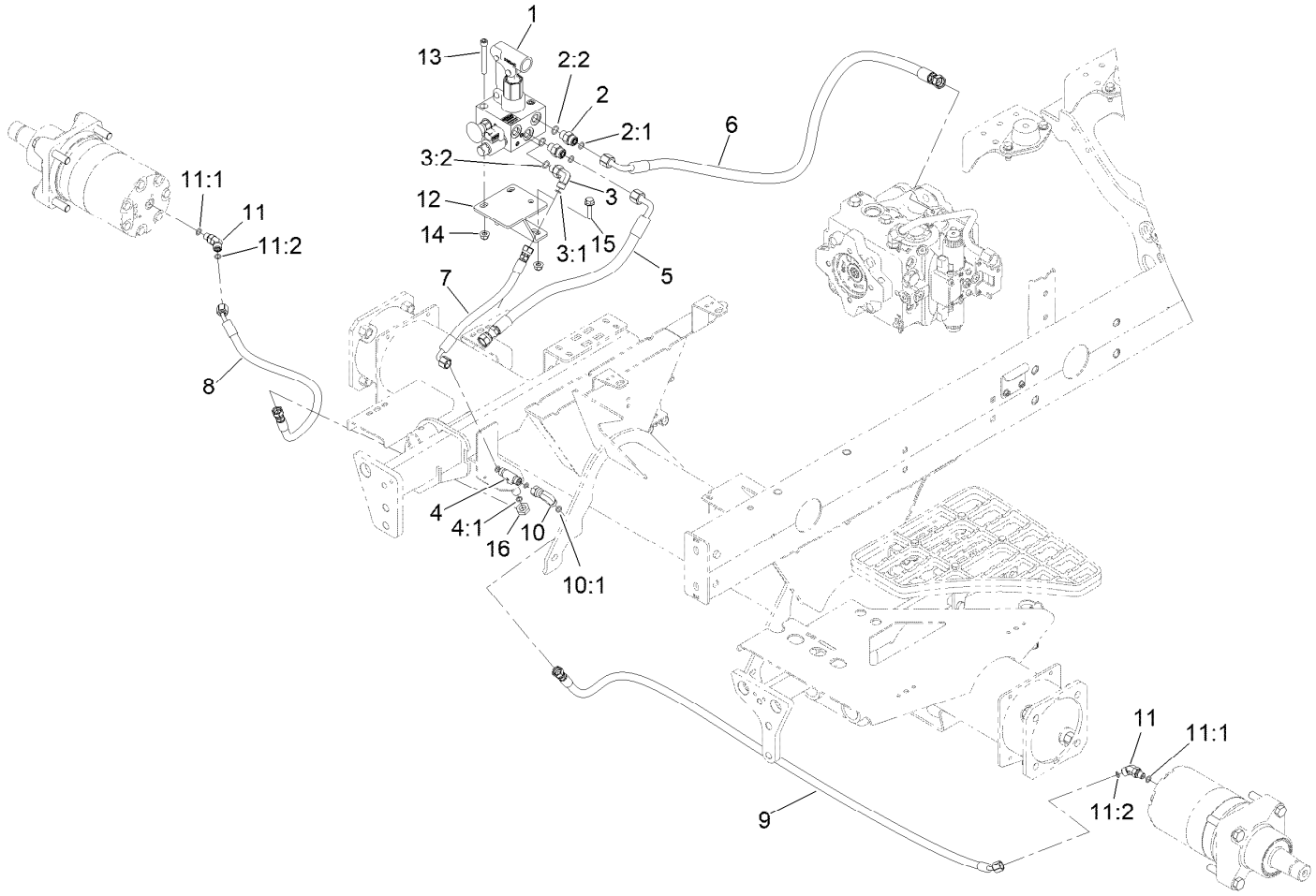

Hydraulic Brake Assembly

Ref.	Part Number	Qty.	Description
1	139-6046	1	Manifold-Brake Release
2	340-2	2	Fitting-Straight
2:1	237-22	1	O-Ring
2:2	237-42	1	O-Ring
3	340-82	1	Fitting-Elbow, 90 DEG
3:1	237-42	1	O-Ring
3:2	237-21	1	O-Ring
4	140-7452	1	Fitting-Tee, Bulkhead
4:1	237-21	3	O-Ring
5	145-2481	1	Hose ASM-Hydraulic
6	145-2455	1	Hose ASM-Hydraulic
7	121-4455	1	Hose-HYD
8	145-2599	1	Hose ASM-HYD HP

Ref.	Part Number	Qty.	Description
9	115-2029	1	HYD Hose ASM
10	92-2745	1	Elbow-90
10:1	237-21	1	O-Ring
11	340-103	2	Fitting-HYD, 45 DEG
11:1	237-78	1	O-Ring
11:2	237-21	1	O-Ring
12	145-2459-03	1	Mount - Brake Release [black]
13	3274-40	3	Screw-HSH
14	104-8300	5	Nut-HF, NI
15	3234-29	2	Screw-HHF
16	340-78	1	Nut-Lock

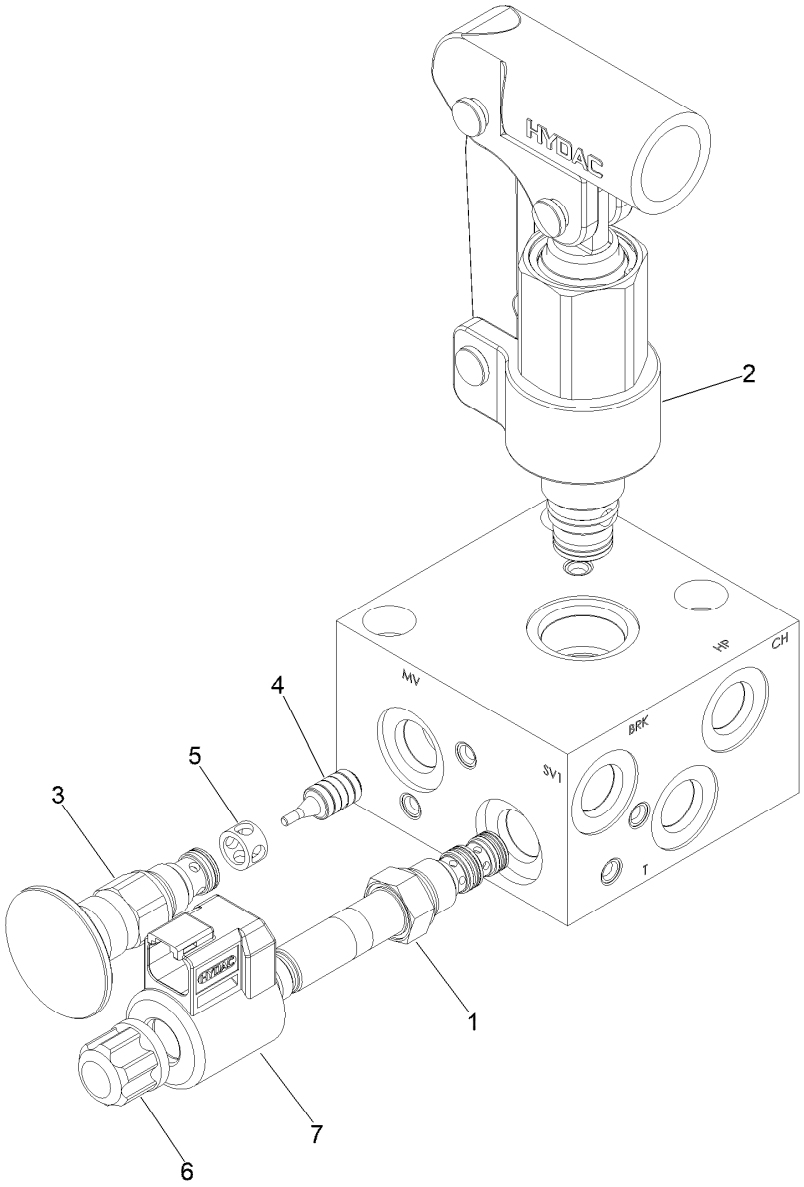

Brake Release Manifold Assembly No. 139-6046

Ref.	*Part Number*	*Qty.*	*Description*
1	145-2563	1	Directional Valve, 3W/2P
2	145-2564	1	Hand Pump
3	145-2565	1	Manual Valve, N.O.
4	145-2566	1	Pilot Piston Assy, Rvs06
5	145-2567	1	Spacer
6	145-2569	1	Coil Nut, Tall (06 Valves)
S1	145-2568	1	*obs* Coil 12Dn01-32-1329

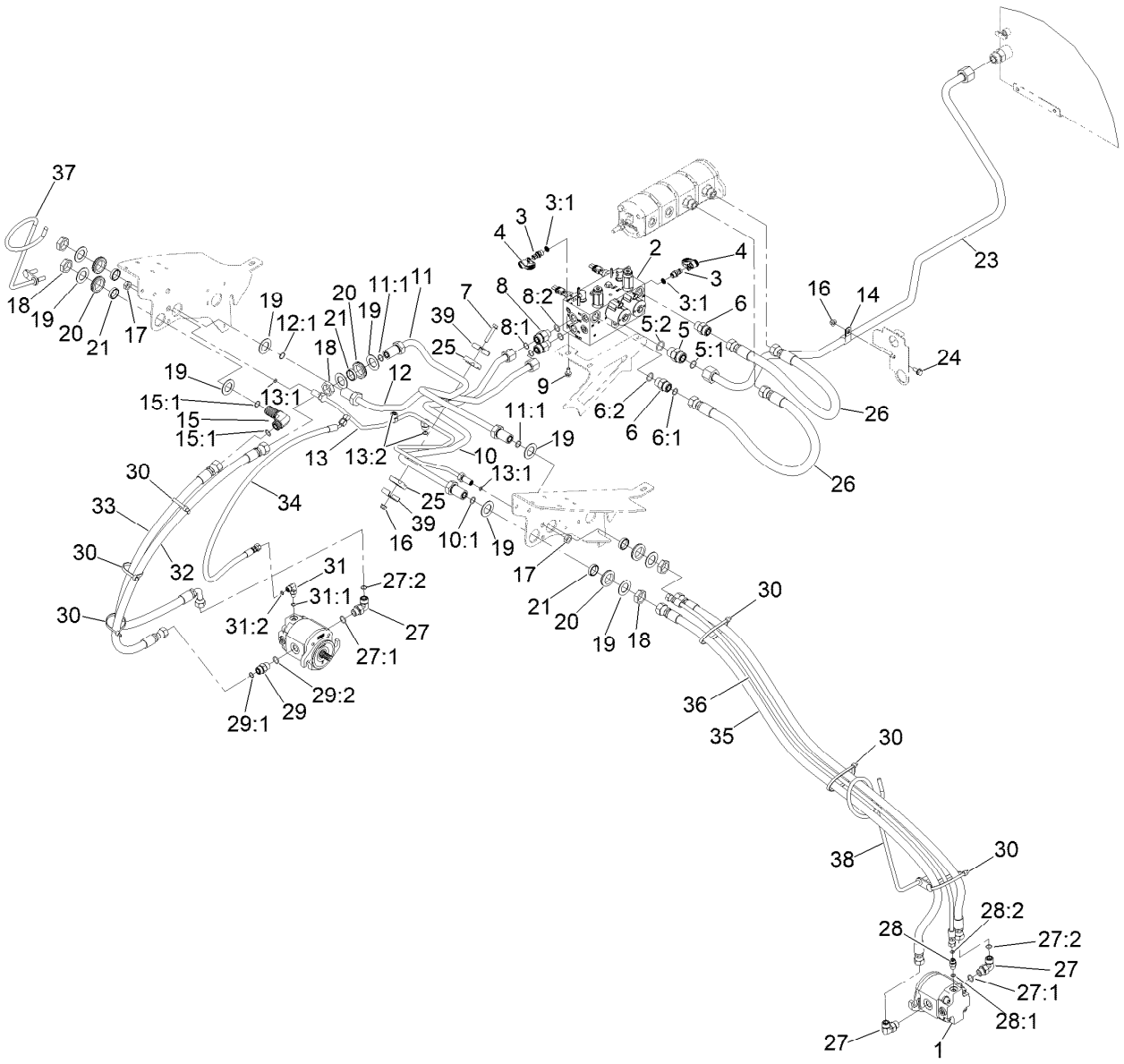

No. 1, 4 and 5 Reel Drive Hydraulic Assembly

Ref.	Part Number	Qty.	Description
1	120-6272	3	HYD Motor ASM
2	121-5628	1	Hydraulic Manifold ASM
3	59-7410	2	Fitting-Diagnostic
3:1	237-42	1	O-Ring
4	354-79	2	Cap-Dust
5	340-9	1	Fitting-STR
5:1	237-58	1	O-Ring
5:2	237-81	1	O-Ring
6	340-7	2	Fitting-Straight
6:1	237-65	1	O-Ring
6:2	237-80	1	O-Ring
7	94-5780	1	Screw-HWH
8	340-155	2	Fitting-Straight
8:1	237-79	1	O-Ring
8:2	237-151	1	O-Ring
9	3234-14	3	Screw-HHF
10	145-2530	1	Hydraulic Tube ASM
10:1	237-65	1	O-Ring
11	117-0137	1	Tube ASM
11:1	237-65	2	O-Ring
12	145-2529	1	Hydraulic Tube ASM

Ref.	Part Number	Qty.	Description
12:1	237-65	1	O-Ring
13	145-2531	1	Hydraulic Tube ASM
13:1	237-22	2	O-Ring
13:2	237-21	3	O-Ring
14	2412-4	1	Clamp-R
15	340-72	1	Fitting-Bulkhead, 90 DEG
15:1	237-65	2	O-Ring
16	104-8300	2	Nut-HF, NI
17	340-78	2	Nut-Lock
18	340-74	5	Nut-Lock, Bulkhead
19	69-9010	10	Washer
20	240-3	5	Grommet-Rubber
21	125-1984	5	Spacer
23	120-3769	1	Hydraulic Tube ASM
24	3234-5	1	Screw-HHF
25	56-7970	2	Clamp-Tube
26	108-1686	2	Hose-HYD
27	340-98	5	Fitting-Elbow, 90 DEG
27:1	237-79	1	O-Ring
27:2	237-30	1	O-Ring
28	340-92	2	Fitting-Straight

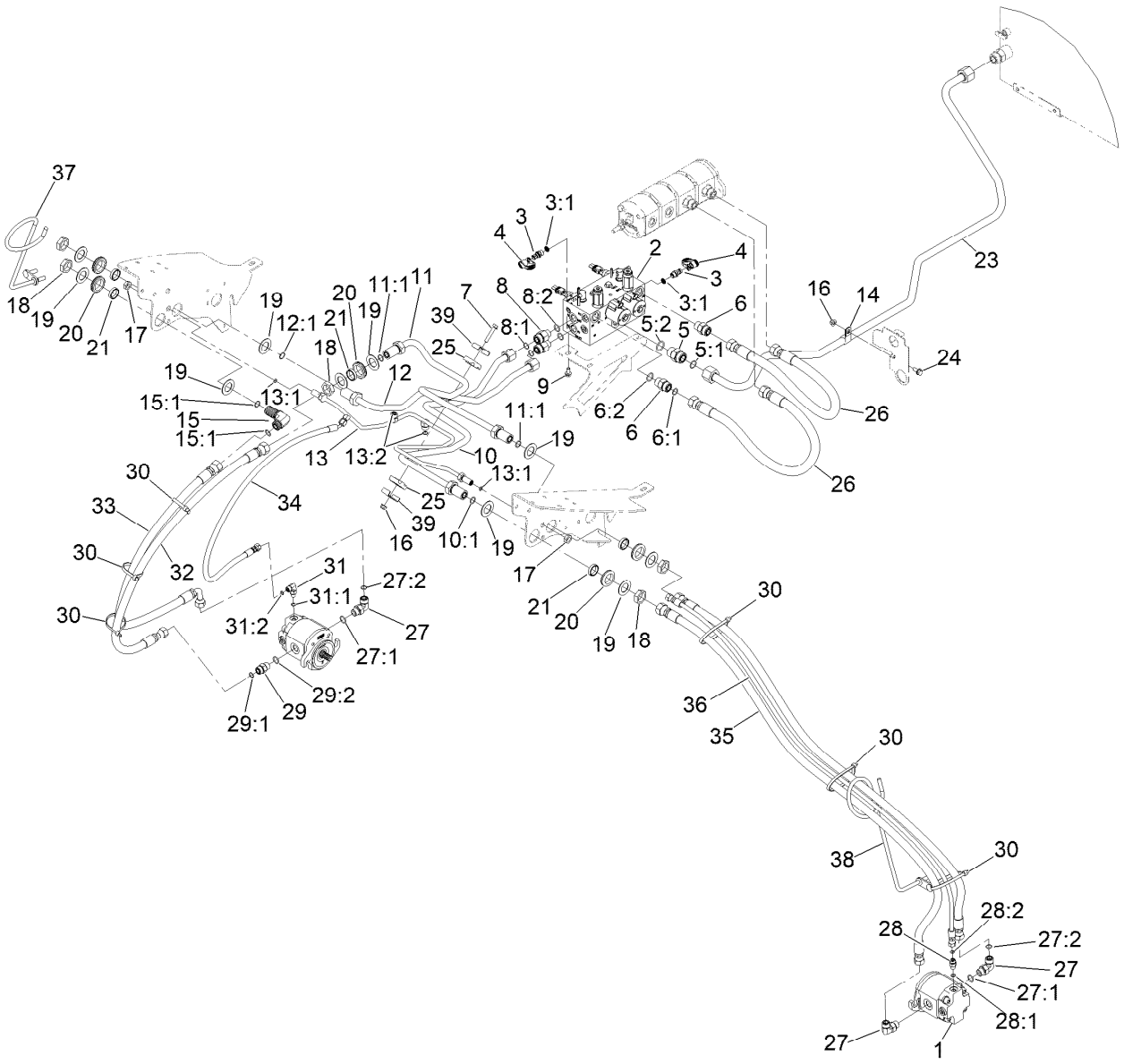

No. 1, 4 and 5 Reel Drive Hydraulic Assembly (continued)

Ref.	Part Number	Qty.	Description
28:1	237-78	1	O-Ring
28:2	237-21	1	O-Ring
29	340-4	1	Fitting-Straight
29:1	237-30	1	O-Ring
29:2	237-79	1	O-Ring
30	3334-945	9	Tie-Cable
31	340-132	1	Fitting-Elbow, 90 DEG
31:1	237-78	1	O-Ring
31:2	237-21	1	O-Ring

Ref.	Part Number	Qty.	Description
32	114-0633	1	Hose-HYD
33	117-5190	1	Hose-HYD
34	140-7456	1	Hose ASM
35	117-5188	4	Hose-HYD
36	106-3680	2	Hose-HYD
37	139-5995	1	Guide-Hose, RH
38	139-5996	1	Hose Guide ASM-LH
39	119-1419	2	Plate-Clamp

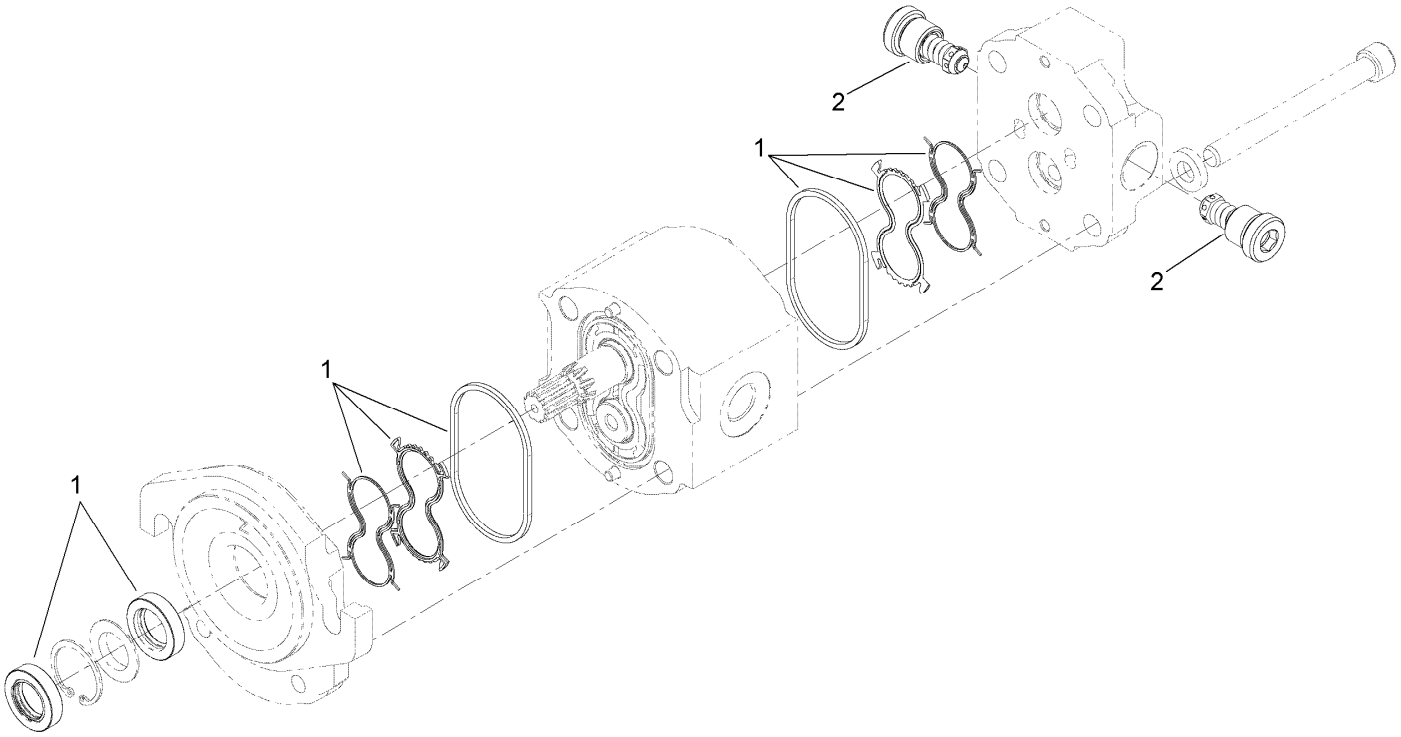

Hydraulic Motor Assembly No. 120-6272

Ref.	*Part Number*	*Qty.*	*Description*
1	138-1234	1	Seal Kit
2	117-5107	1	Valve-Check

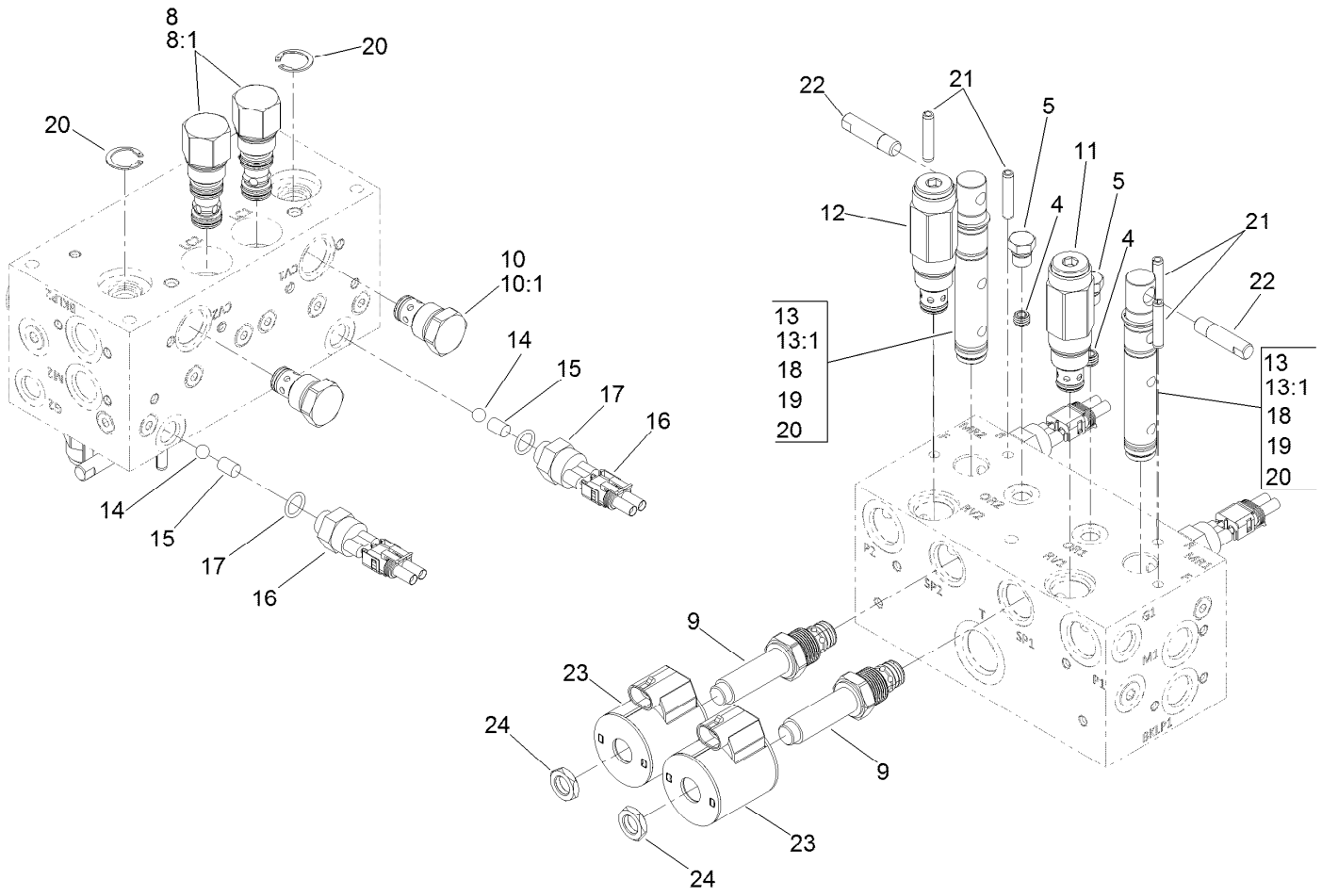

Manifold Assembly No. 121-5628

Ref.	Part Number	Qty.	Description
4	110-8883	1	Plug-Orifice (0.040)
5	117-0115	1	Plug
8	120-1693	2	Compensator-Pressure
8:1	119-2159	1	Seal Kit
9	138-6961	2	Valve-Proportional, NC
10	110-8881	2	Valve-Check
10:1	105-9159	1	Seal Kit ●
11	138-6962	1	Valve-Relief, 2500 PSI
12	138-6963	1	Valve-Relief, 3500 PSI
13	117-0108	2	Spool-Rotary
13:1	117-0109	1	Seal Kit

Ref.	Part Number	Qty.	Description
14	117-4605	2	Ball-SS
15	120-1650	2	Pin
16	72-4310	2	Switch-Ball
17	110-8757	2	O-Ring
18	117-4606	6	O-Ring
19	112-6534	4	Ring-Back Up
20	112-6532	4	Ring-Retaining
21	112-6531	4	Pin-Spring
22	110-8758	2	Handle-Spool
23	110-6344	2	Coil-12V, DC
24	110-2634	2	Nut-Coil

● Not illustrated

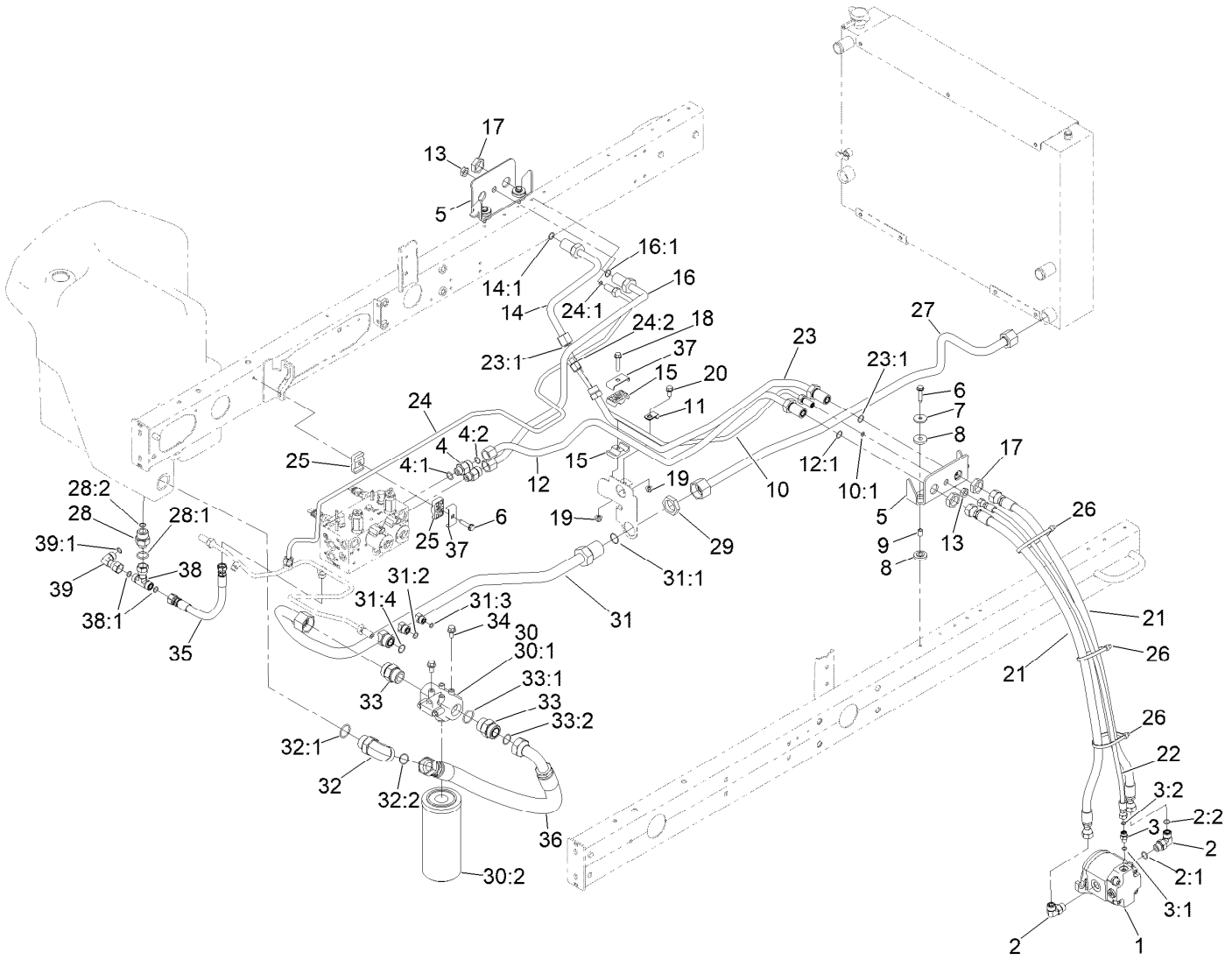

No. 2 and 3 Reel Drive Hydraulic Assembly

Ref.	Part Number	Qty.	Description
1	120-6272	2	HYD Motor ASM
2	340-98	4	Fitting-Elbow, 90 DEG
2:1	237-79	1	O-Ring
2:2	237-30	1	O-Ring
3	340-92	2	Fitting-Straight
3:1	237-78	1	O-Ring
3:2	237-21	1	O-Ring
4	340-155	2	Fitting-Straight
4:1	237-79	1	O-Ring
4:2	237-151	1	O-Ring
5	117-0174-03	2	Bracket-Bulkhead
6	32144-57	5	Screw
7	105-3048	4	Washer-Flat
8	240-11	8	Bushing-Flange
9	99-8611	4	Spacer
10	120-3772	1	HYD Tube ASM
10:1	237-21	1	O-Ring
11	2412-113	1	Clamp-R
12	145-2534	1	Hydraulic Tube ASM
12:1	237-65	1	O-Ring
13	340-78	2	Nut-Lock

Ref.	Part Number	Qty.	Description
14	117-0140	1	Tube ASM
14:1	237-65	1	O-Ring
15	56-7971	2	Clamp-Tube
16	145-2527	1	Hydraulic Tube ASM
16:1	237-65	1	O-Ring
17	340-74	4	Nut-Lock, Bulkhead
18	94-5780	1	Screw-HWH
19	104-8300	2	Nut-HF, NI
20	3234-5	1	Screw-HHF
21	114-0633	4	Hose-HYD
22	98-4590	2	Hose-HYD
23	120-3775	1	HYD Tube ASM
23:1	237-65	2	O-Ring
24	145-2533	1	Hydraulic Tube ASM
24:1	237-21	1	O-Ring
24:2	237-22	1	O-Ring
25	56-7972	2	Clamp-Tube
26	3334-945	6	Tie-Cable
27	121-5600	1	HYD Tube ASM
28	100-4240	1	Fitting-STR
28:1	237-30	1	O-Ring

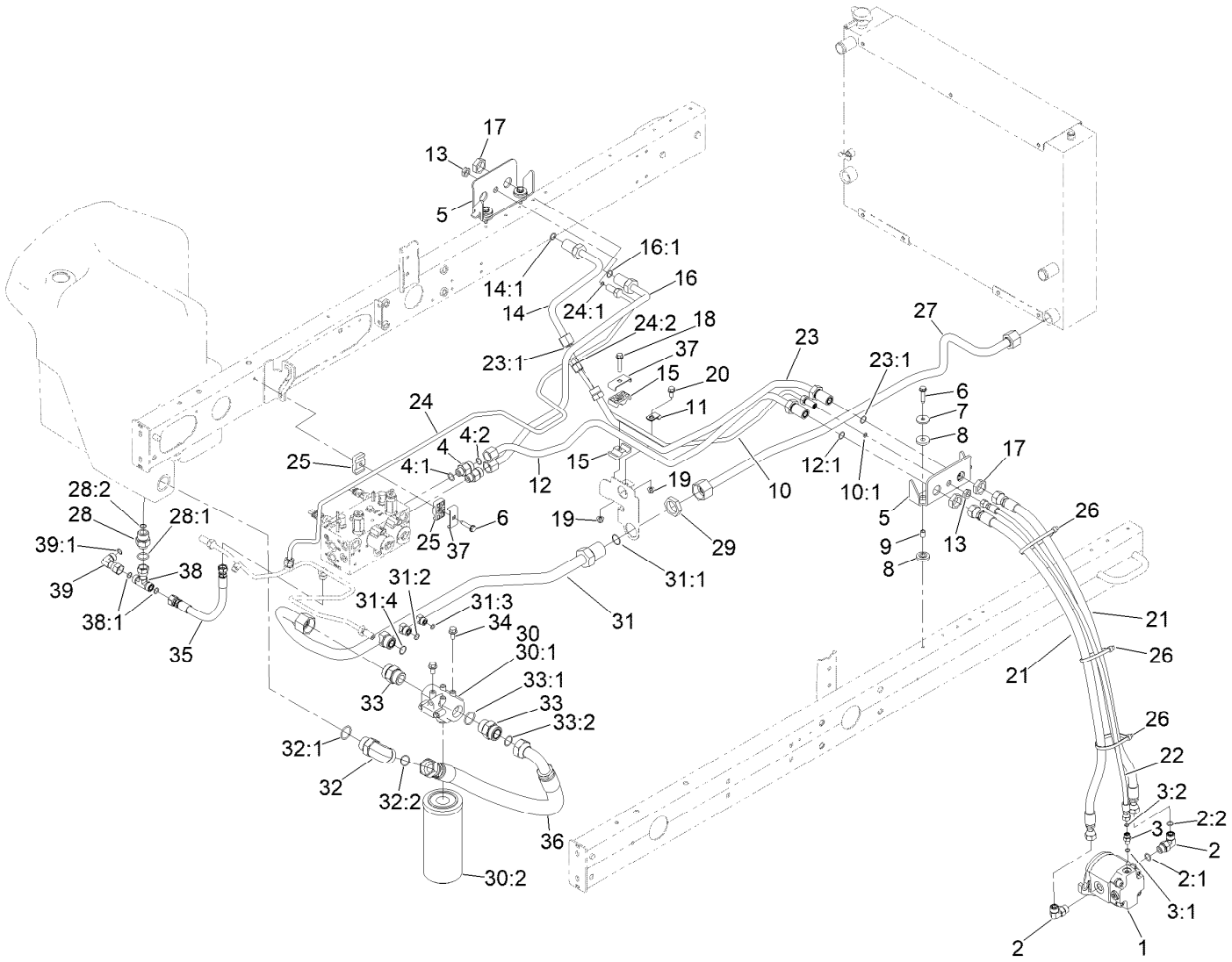

No. 2 and 3 Reel Drive Hydraulic Assembly (continued)

Ref.	Part Number	Qty.	Description
28:2	237-81	1	O-Ring
29	340-128	1	Nut-Bulkhead
30	98-3923	1	Oil Filter ASM
30:1	104-0080	1	Filter Head ASM
30:2	94-2621	1	Element-Filter
31	144-2055	1	Tube ASM-Hydraulic
31:1	340-65	1	O-Ring
31:2	237-30	1	O-Ring
31:3	237-22	1	O-Ring
31:4	237-58	1	O-Ring
32	340-129	1	Fitting-Elbow, 90 DEG
32:1	237-146	1	O-Ring

Ref.	Part Number	Qty.	Description
32:2	340-65	1	O-Ring
33	104-3797	2	Fitting-Straight
33:1	237-146	1	O-Ring
33:2	340-65	1	O-Ring
34	3234-1	2	Screw-HHF
35	145-2457	1	Hose ASM-Hydraulic
36	108-1689	1	Hose-HYD
37	119-1419	2	Plate-Clamp
38	93-6810	1	Fitting-Tee
38:1	237-30	2	O-Ring
39	94-6031	1	Elbow-90
39:1	237-30	1	O-Ring

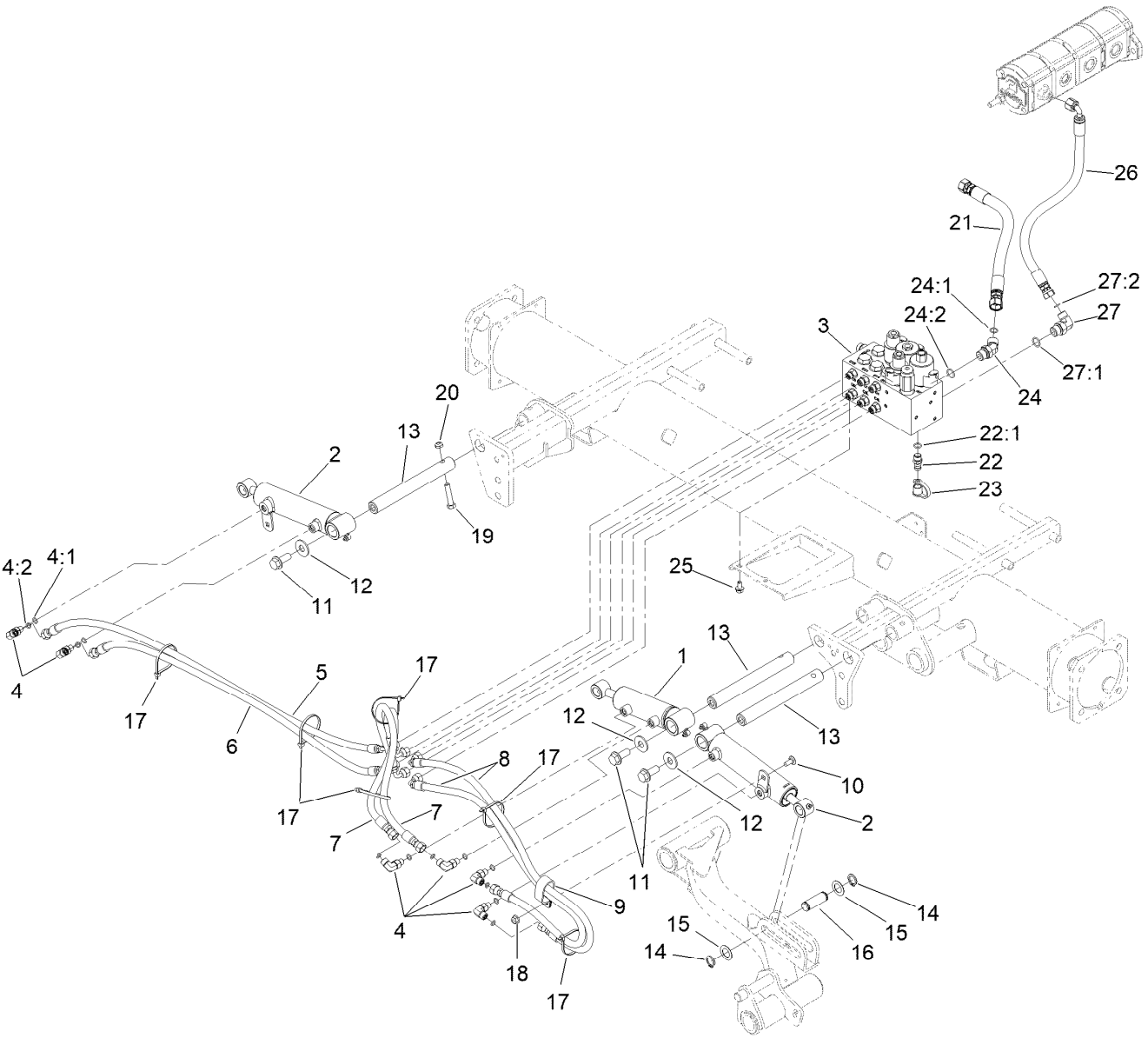

No. 1, 4 and 5 Lift Arm Hydraulic Assembly

Ref.	Part Number	Qty.	Description
1	138-6999	1	HYD Cylinder ASM
2	163-3534	2	Cylinder-Hydraulic
3	105-7577	1	HYD Lift Block Manifold ASM
4	340-132	6	Fitting-Elbow, 90 DEG
4:1	237-78	1	O-Ring
4:2	237-21	1	O-Ring
5	106-3692	1	Hose-HYD
6	106-3693	1	Hose-HYD
7	93-6887	2	Hose-HYD
8	85-4940	2	Hose-HYD
9	2412-137	1	Clamp-R, Double
10	3230-23	1	Bolt-CARR
11	3234-38	3	Screw-HHF
12	3256-6	3	Washer-Flat
13	117-0148	3	Pin-Cylinder
14	32120-93	6	Ring-Retaining
15	3-6498	6	Washer-Thrust
16	104-0046	3	Pin-Slide, Cylinder
17	3290-379	6	Tie-Cable
18	104-8300	1	Nut-HF, NI
19	323-9	3	Screw-HH
20	3296-59	3	Nut-Lock, NI
21	117-0729	1	Hose ASM
22	59-7410	1	Fitting-Diagnostic
22:1	237-42	1	O-Ring
23	354-79	1	Cap-Dust
24	340-101	1	Fitting-HYD, 45 DEG
24:1	237-30	1	O-Ring
24:2	237-79	1	O-Ring
25	3234-14	2	Screw-HHF
26	145-2585	1	Hose ASM-HYD
27	340-18	1	Fitting-HYD, 90 DEG
27:1	237-79	1	O-Ring
27:2	237-22	1	O-Ring

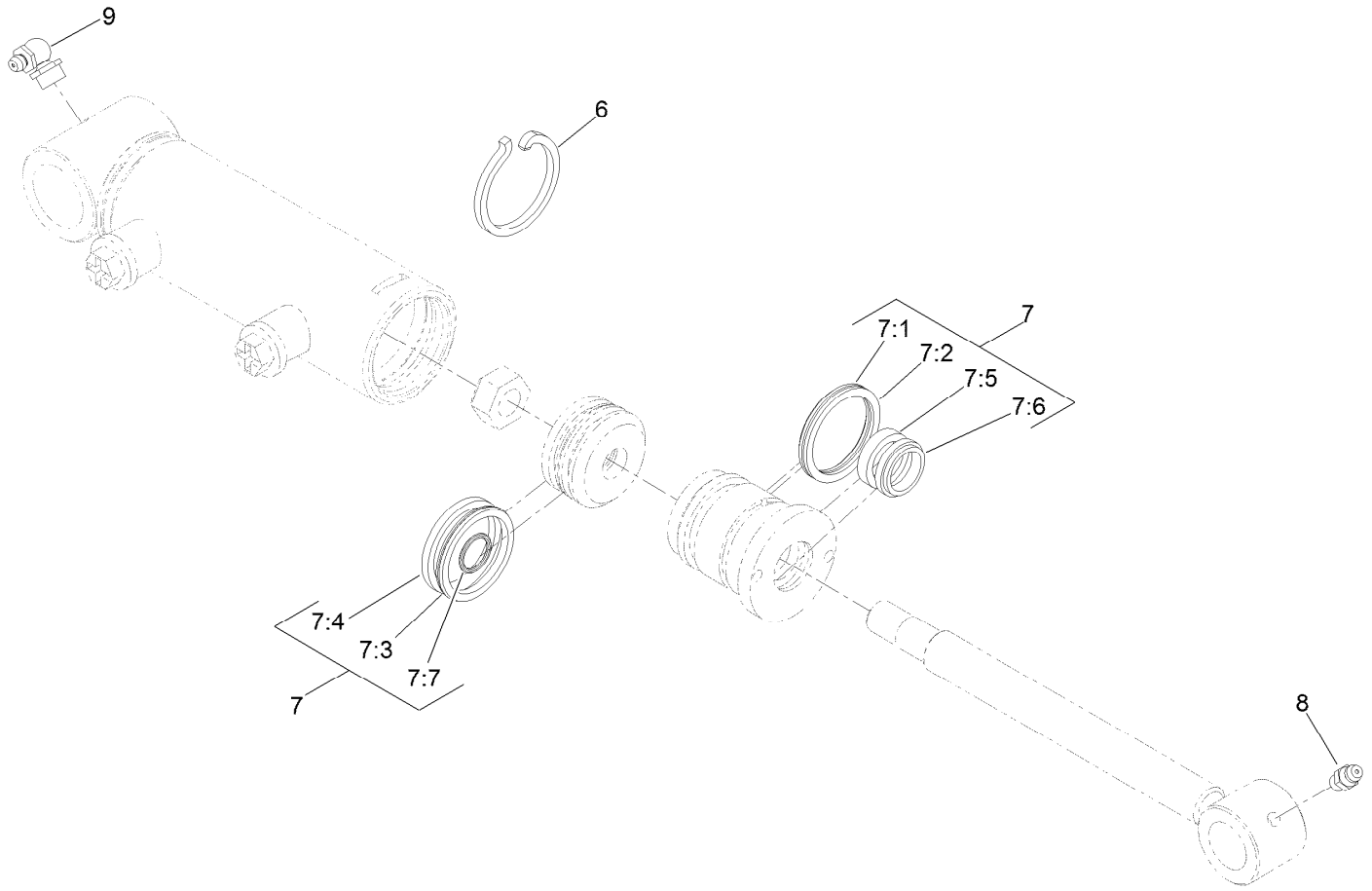

Hydraulic Cylinder Assembly No. 138-6999

Ref.	*Part Number*	*Qty.*	*Description*
6	84-1680	1	Ring-Retaining
7	133-2900	1	Seal Kit
7:1		1	O-Ring ●
7:2		1	Backup ●
7:3		1	Bp Seal ●
7:4		1	Wear Ring-Ht ●
7:5		1	Bt Seal ●
7:6		1	Dust Seal-Dt ●
7:7		1	O-Ring ●
8	302-5	1	Fitting-Grease
9	302-33	1	Fitting-Grease

● Not serviced separately

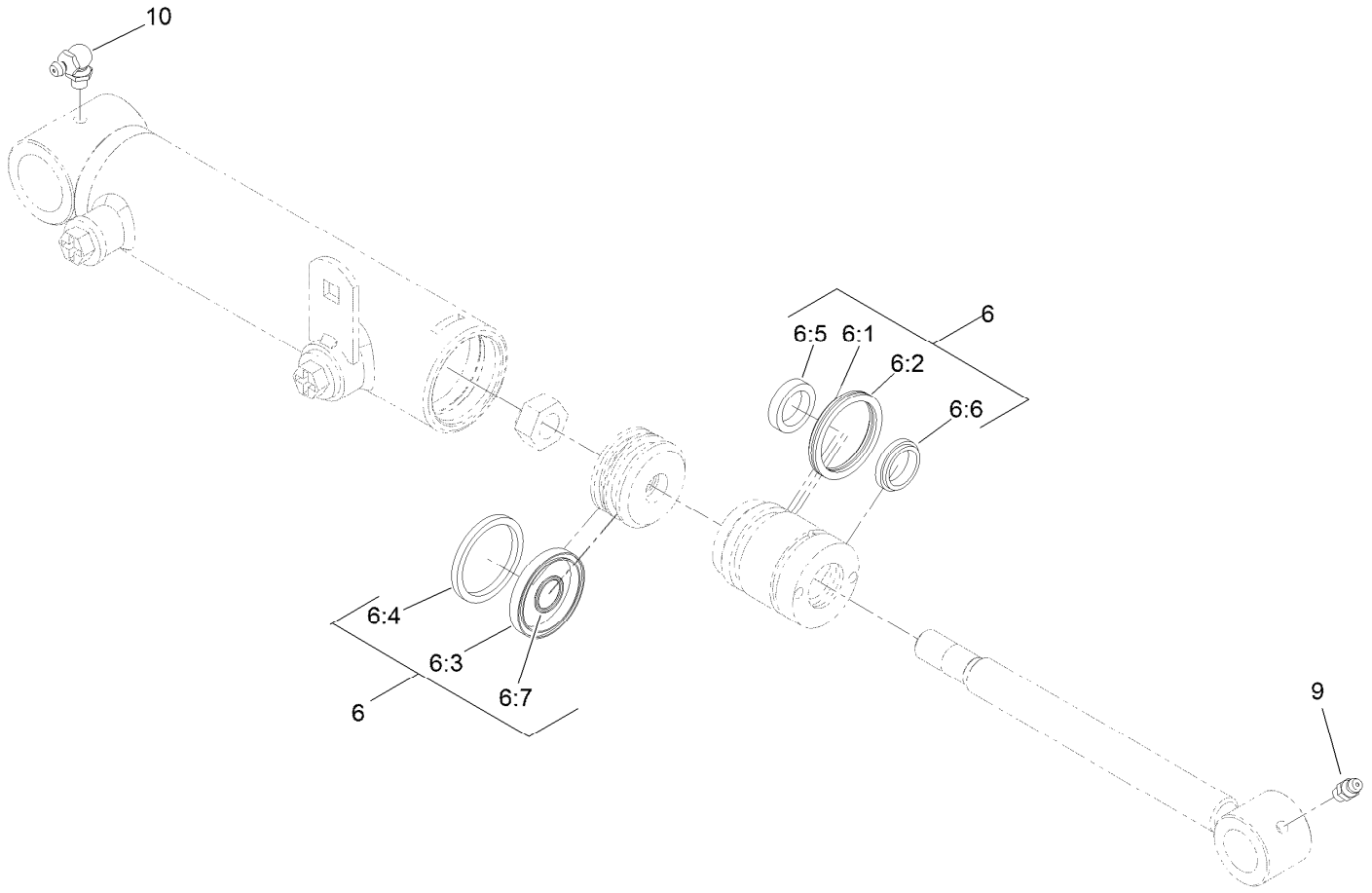

Hydraulic Cylinder Assembly No. 163-3534

Ref.	*Part Number*	*Qty.*	*Description*
6	163-3529	1	Seal Kit
6:1		1	O-Ring ●
6:2		1	Backup ●
6:3		1	Pps Seal ●
6:4		1	Wear Ring-Ht ●
6:5		1	Bt Seal ●
6:6		1	Dust Seal-Dt ●
6:7		1	O-Ring ●
9	302-5	1	Fitting-Grease
10	302-60	1	Fitting-Grease

● Not serviced separately

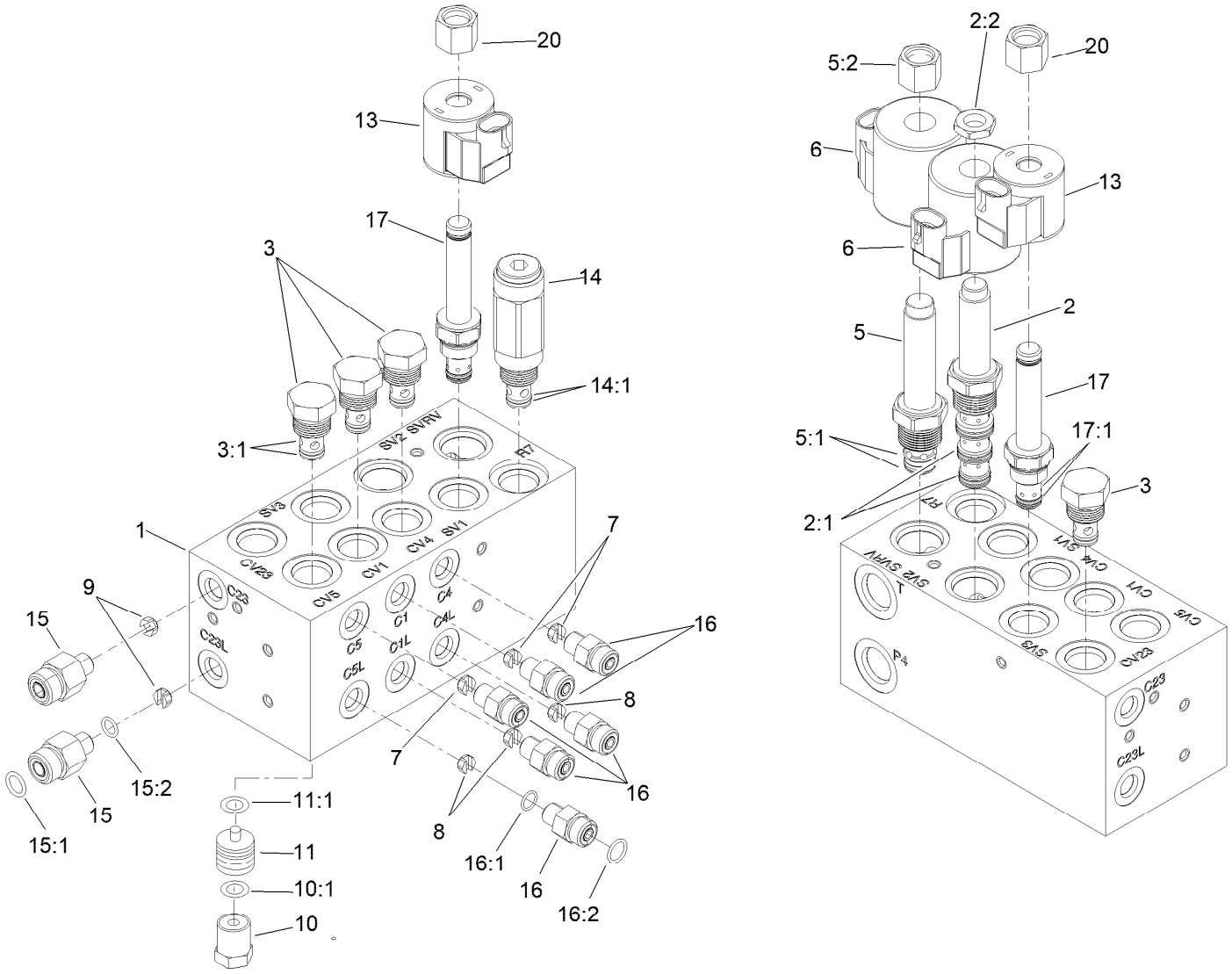

Hydraulic Manifold Block Assembly No. 105-7577

Ref.	Part Number	Qty.	Description
1		1	Block-Manifold ●
2	110-8906	1	Valve-Solenoid
2:1	110-8908	1	Spool Valve Seal Kit
2:2	110-2634	1	Nut-Coil
3	110-9006	4	Valve-Check
3:1	105-9156	1	Seal Kit
5	110-8905	1	Valve-Relief, Solenoid
5:1	110-6316	1	Seal Kit
5:2	130-8180	1	Nut-Coil (9/16-24 Unef-2B)
6	110-6344	2	Coil-12V, DC
7	110-8904	3	Orifice-Control, Flow (0.028)
8	110-8903	3	Orifice-Control, Flow (0.055)
9	110-8902	2	Orifice-Control, Flow (0.046)
10	354-70	4	Plug-Hex, Hollow
10:1	237-80	1	O-Ring

Ref.	Part Number	Qty.	Description
11	110-8901	4	Piston-Pilot
11:1	110-8900	1	O-Ring
13	110-0497	2	Coil-Solenoid
14	110-8899	1	Valve-Relief
14:1	105-9156	1	Seal Kit
15	340-88	2	Fitting-Straight
15:1	237-22	1	O-Ring
15:2	237-78	1	O-Ring
16	340-92	6	Fitting-Straight
16:1	237-78	1	O-Ring
16:2	237-21	1	O-Ring
17	147-3090	2	Valve-Solenoid
17:1	107-7527	1	Seal Kit
20	107-7812	2	Nut-Solenoid

● Not serviced separately

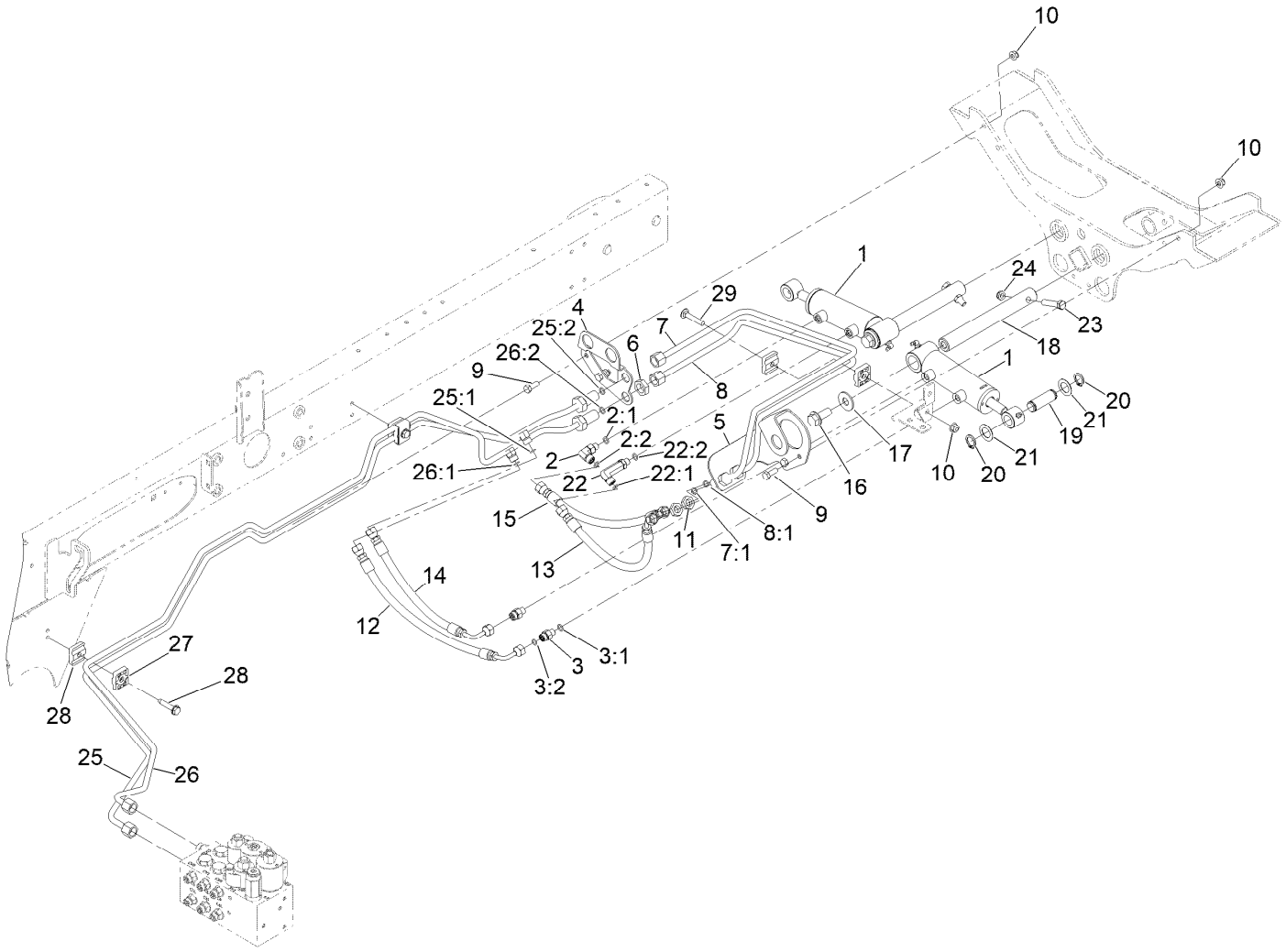

Rear Lift Hydraulic Assembly

Ref.	Part Number	Qty.	Description
1	138-6999	2	HYD Cylinder ASM
2	340-132	1	Fitting-Elbow, 90 DEG
2:1	237-78	1	O-Ring
2:2	237-21	1	O-Ring
3	340-92	2	Fitting-Straight
3:1	237-78	1	O-Ring
3:2	237-21	1	O-Ring
4	120-3782-0P	1	Brkt-Bulhead, RH
5	110-0917-0P	1	Bracket-Bulkhead, LH
6	340-70	2	Nut-Lock
7	133-2987	1	Tube-ASM
7:1	237-21	1	O-Ring
8	133-2986	1	Tube-ASM
8:1	237-21	1	O-Ring
9	322-4	4	Screw-HH
10	104-8300	5	Nut-HF, NI
11	340-78	2	Nut-Lock
12	110-0930	1	Hose-HYD
13	110-8966	1	Hose-HYD
14	110-0929	1	Hose-HYD
15	110-0931	1	Hose-HYD

Ref.	Part Number	Qty.	Description
16	3234-38	2	Screw-HHF
17	3256-6	2	Washer-Flat
18	117-0148	2	Pin-Cylinder
19	104-0046	2	Pin-Slide, Cylinder
20	32120-93	4	Ring-Retaining
21	3-6498	4	Washer-Thrust
22	100-7695	1	Fitting-Elbow 90
22:1	237-78	1	O-Ring
22:2	237-21	1	O-Ring
23	323-9	2	Screw-HH
24	3296-59	2	Nut-Lock, NI
25	145-2552	1	Hydraulic Tube ASM
25:1	237-21	1	O-Ring
25:2	237-22	1	O-Ring
26	145-2553	1	Hydraulic Tube ASM
26:1	237-21	1	O-Ring
26:2	237-22	1	O-Ring
27	32144-57	2	Screw
28	56-7973	6	Clamp-Tube
29	3230-5	1	Bolt-CARR

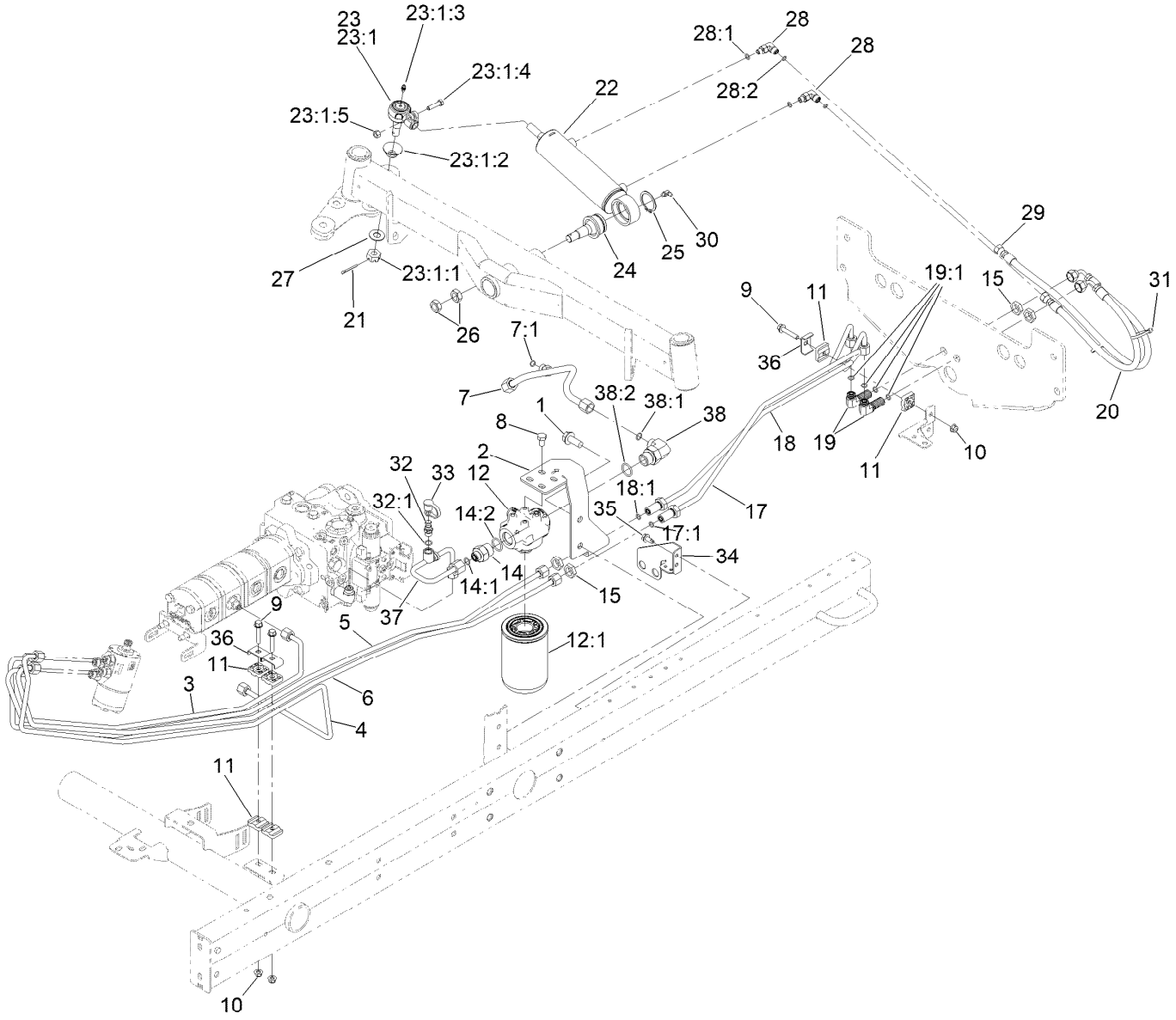

Steering Hydraulic Assembly

Ref.	Part Number	Qty.	Description
1	3234-38	2	Screw-HHF
2	145-2477-0P	1	Bracket-Mount, Filter
3	144-2096	1	Tube ASM-Hydraulic
4	144-2054	1	Tube ASM-Hydraulic
5	144-2094	1	Tube ASM-Hydraulic
6	144-2095	1	Tube ASM-Hydraulic
7	145-2562	1	Hydraulic Tube ASM
7:1	237-22	1	O-Ring
8	33115-016	4	Screw-HH
9	94-5780	3	Screw-HWH
10	104-8300	3	Nut-HF, NI
11	56-7973	6	Clamp-Tube
12	93-2242	1	Oil Filter ASM
12:1	75-1310	1	Filter-HYD
14	100-4240	1	Fitting-STR
14:1	237-30	1	O-Ring
14:2	237-81	1	O-Ring
15	340-70	4	Nut-Lock
17	133-2988	1	Tube ASM
17:1	237-22	1	O-Ring
18	133-2989	1	Tube ASM
18:1	237-22	1	O-Ring
19	340-154	2	Union-Bulkhead
19:1	237-22	2	O-Ring
20	110-0928	1	Hose-HYD
21	3272-12	1	Pin-Cotter
22	110-9035	1	HYD Cylinder ASM
23	106-6895-03	1	Ball Joint ASM
23:1		1	Joint-Ball ●
23:1:1	32136-13	1	Nut-SHH
23:1:2	106-6896	1	Seal
23:1:3	302-5	1	Fitting-Grease
23:1:4	3210-7	1	Screw-HH
23:1:5	32152-5	1	Nut-Hex
24	106-6774	1	Joint-Ball
25	32151-104	1	Ring-Retaining, External

● Not serviced separately

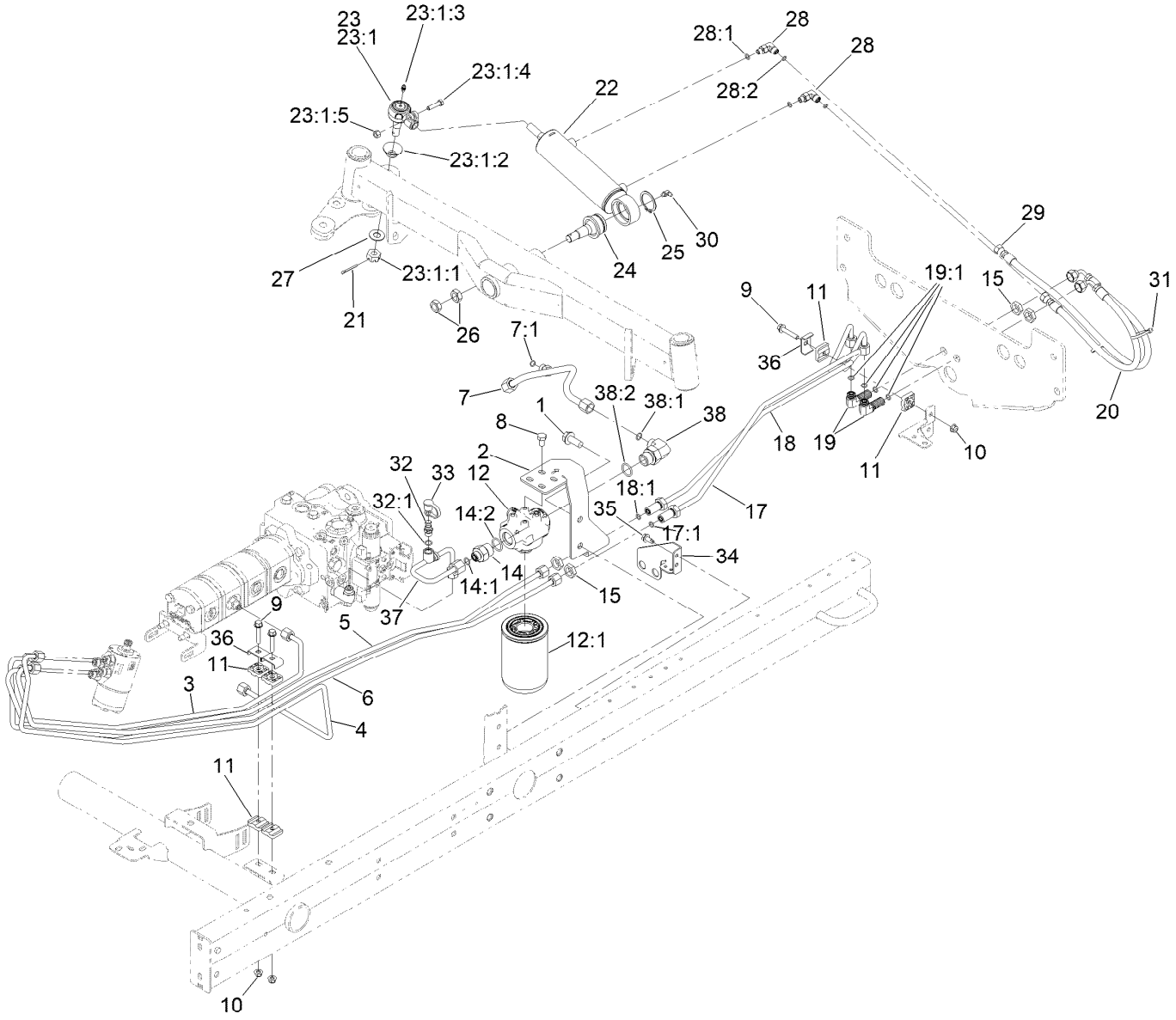

Steering Hydraulic Assembly (continued)

Ref.	Part Number	Qty.	Description
26	3220-6	2	Nut-Jam
27	69-8980	1	Washer
28	340-132	2	Fitting-Elbow, 90 DEG
28:1	237-78	1	O-Ring
28:2	237-21	1	O-Ring
29	110-0973	1	Hose-HYD
30	302-40	1	Fitting-Grease, 90 DEG
31	3290-378	2	Tie-Cable
32	59-7410	1	Fitting-Diagnostic

Ref.	Part Number	Qty.	Description
32:1	237-42	1	O-Ring
33	353-947	1	Cap-Dust, Black
34	120-3781-0P	1	Brkt-Bulhead Steer
35	32104-32	2	Screw-HWH
36	119-1418	3	Plate-Clamp, Short
37	145-2478	1	Tube ASM-Hydraulic
38	340-131	1	Fitting-HYD, 90 DEG
38:1	237-30	1	O-Ring
38:2	237-81	1	O-Ring

● Not serviced separately

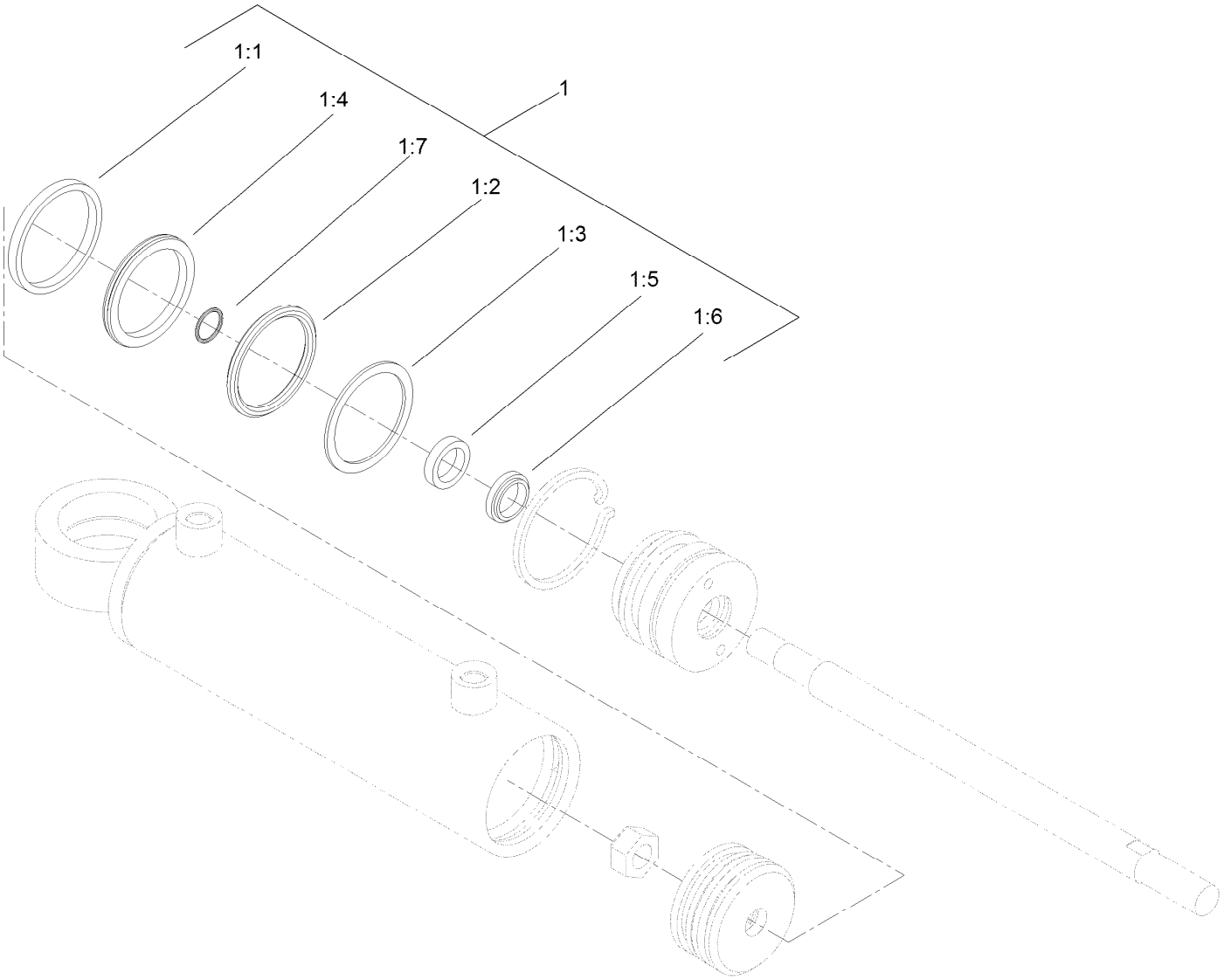

Hydraulic Cylinder Assembly No. 110-9035

Ref.	*Part Number*	*Qty.*	*Description*
1	114-8875	1	Seal Kit
1:1		1	O-Ring ●
1:2		1	Backup ●
1:3		1	Bp Seal ●
1:4		1	Wear Ring ●
1:5		1	Bt Seal ●
1:6		1	Dust Seal ●
1:7		1	O-Ring ●

● Not serviced separately

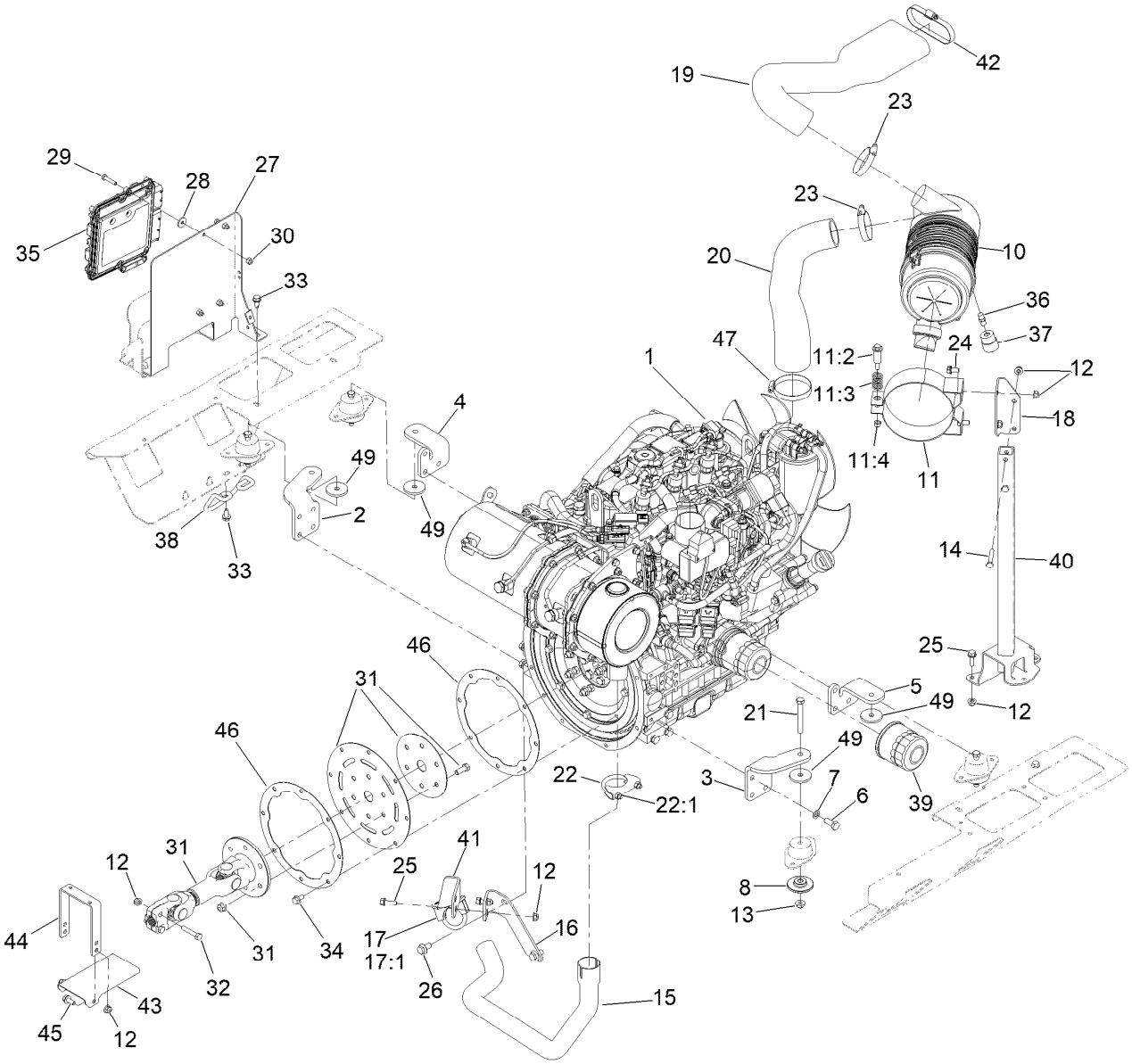

Engine, Air Cleaner and Drive Shaft Assembly

Ref.	Part Number	Qty.	Description
1	138-6915	1	Engine-Yanmar, 3Tnv88C-Dtr
2	120-3777-0P	1	Mount-Engine Rf
3	120-3778-0P	1	Mount-Engine Lf
4	120-3779-0P	1	Mount-Engine Rr
5	120-3780-0P	1	Mount-Engine Lr
6	33115-025	14	Screw-HH
7	48-9590	14	Washer-Lock
8	138-6462	4	Support-Isolator
10	106-5277	1	Air Cleaner ASM
11	100-4825	1	Band-Mounting, Air Cleaner
11:2	94-3653	1	Bolt
11:3	94-3654	1	Spring
11:4	33024-00	1	Nut-Lock, NI
12	104-8300	10	Nut-HF, NI
13	104-8301	6	Nut-HF, NI
14	322-10	2	Screw-HH
15	125-8765	1	Tube-Exhaust
16	125-8763-0P	1	Bracket-Tailpipe
17	2112-9	1	Clamp
17:1	32128-20	2	Nut-HF

Ref.	Part Number	Qty.	Description
18	120-6298-0P	1	Bracket-Aircleaner
19	121-5559	1	Hose-Air Cleaner
20	120-3786	1	Hose-Air Cleaner
21	323-14	4	Screw-HH
22	2112-6	1	Clamp-Muffler
22:1	3218-2	2	Nut-Hex Jam
23	2412-130	2	Clamp-Hose
24	3234-14	2	Screw-HHF
25	3234-29	4	Screw-HHF
26	33105-020	2	Screw-HHF
27	122-0898-0P	1	Bracket-Ecu
28	66-2921	4	Washer-Friction
29	321-8	4	Screw-HH
30	3296-42	4	Nut-Lock, NI
31	145-2508	1	Driveshaft ASM
32	323-9	2	Screw-HH
33	32104-32	3	Screw-HWH
34	33104-016	8	Screw-HHF
35	121-5592	1	Electronic Control Unit
36	94-1416	1	Adapter-Indicator
37	93-9164	1	Indicator-Mini

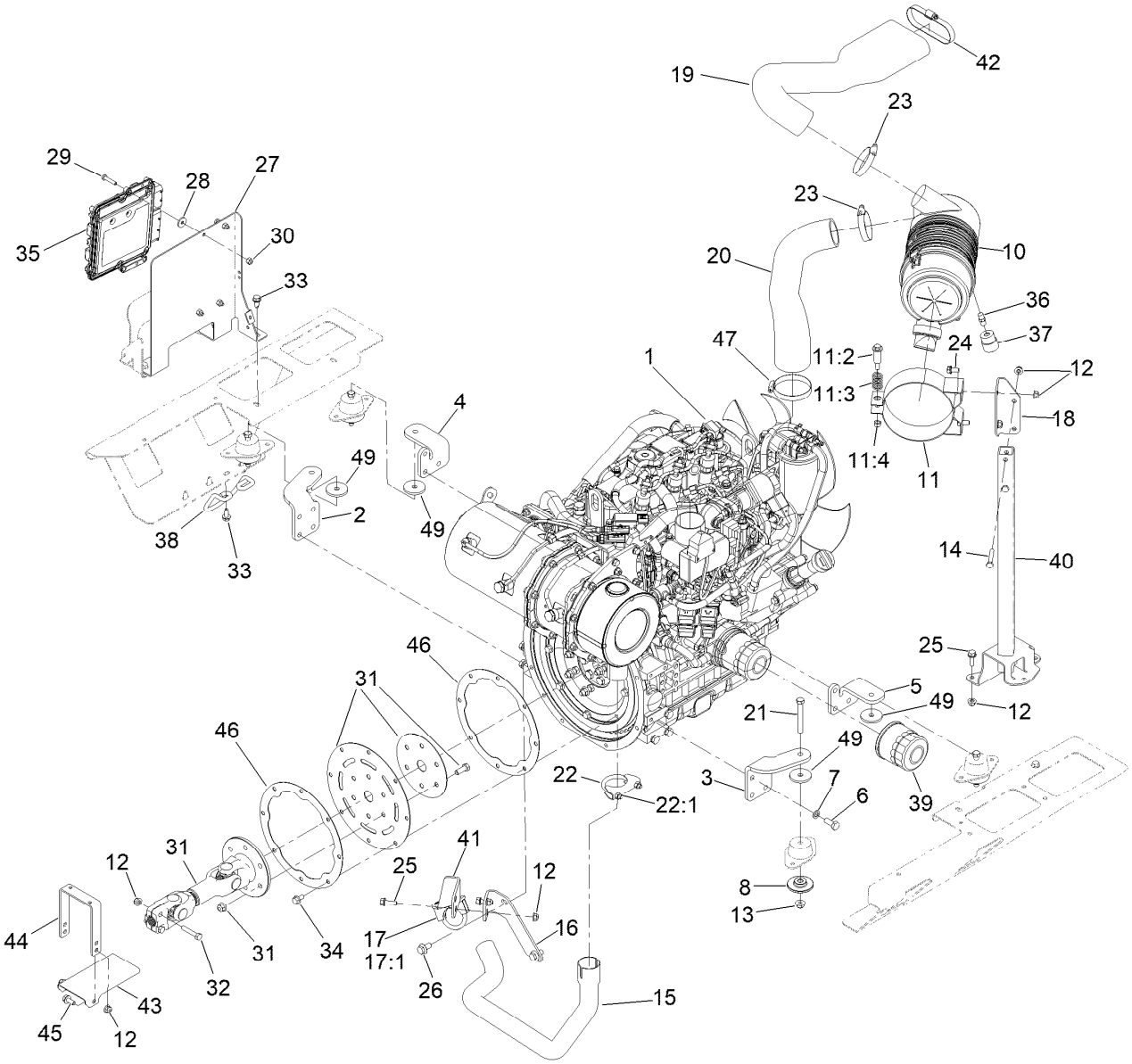

Engine, Air Cleaner and Drive Shaft Assembly (continued)

Ref.	Part Number	Qty.	Description
38	127-2612	1	Guard-Pipe, Tail
39	125-7025	1	Filter-Engine, Oil
40	120-2949-0P	1	Stand ASM [primed]
41	125-8764-0P	1	Bracket-Tailpipe
42	2412-46	1	Clamp
43	125-8766-0P	1	Shield-Heat

Ref.	Part Number	Qty.	Description
44	108-1799-0P	1	Hoop - Guard
45	3234-5	2	Screw-HHF
46	136-8040-0P	2	Ring - Backup
47	2412-53	1	Clamp-Drive, Worm
49	115-1485	4	Washer-Plain

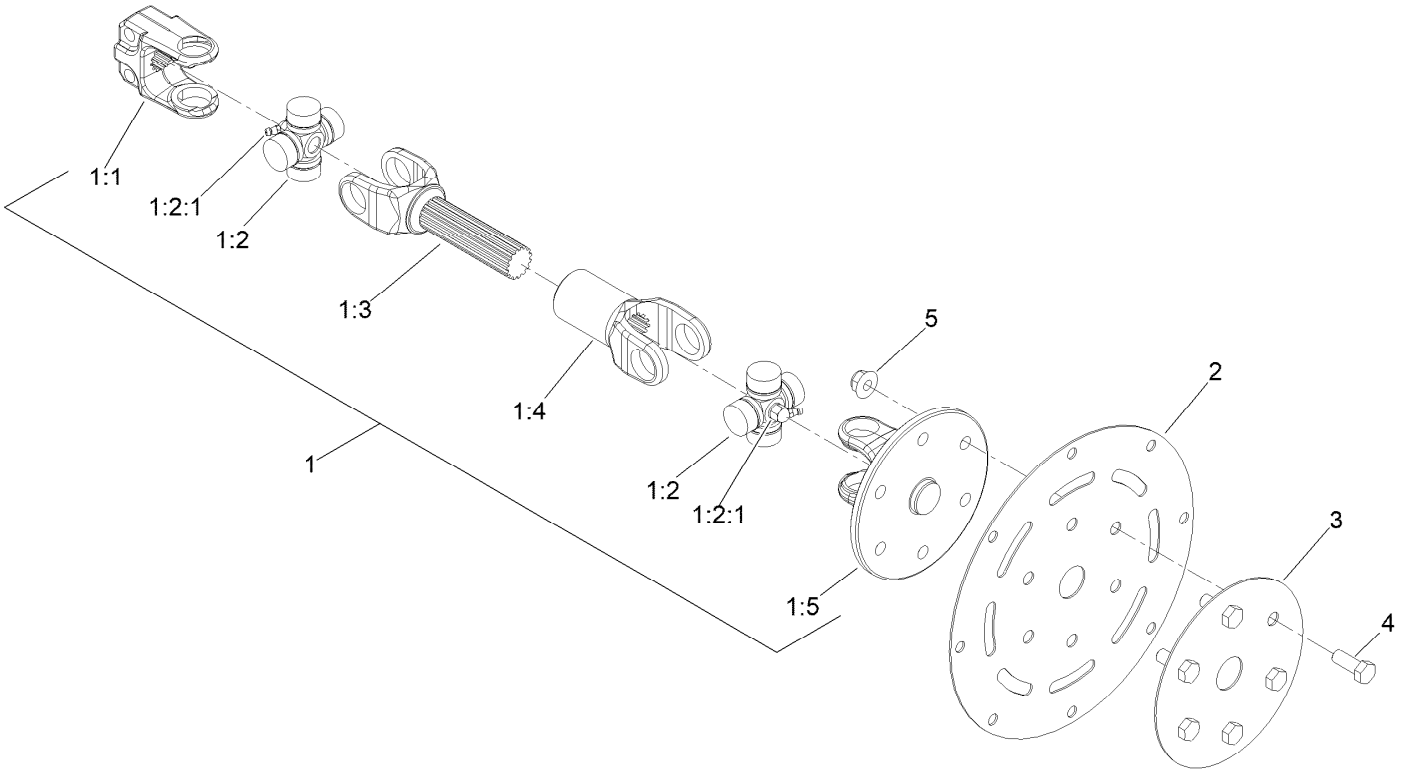

Driveshaft Assembly No. 145-2508

Ref.	*Part Number*	*Qty.*	*Description*
1		1	Driveshaft ●
1:1	145-2535	1	Yoke-Driveshaft, 13T
1:2	54-9180	2	U-Joint Kit
1:2:1	62-3820	1	Fitting-Grease
1:3	108-0632	1	Yoke And Shaft ASM
1:4	108-0633	1	Yoke-Telescoping
1:5	145-2546	1	Yoke ASM
2	138-6933-0P	1	Plate-Flywheel Adapter
3	133-2963-0P	1	Ring-Backup
4	323-6	6	Screw-HH
5	104-8301	6	Nut-HF, NI

● Not serviced separately

Air Cleaner Assembly No. 106-5277

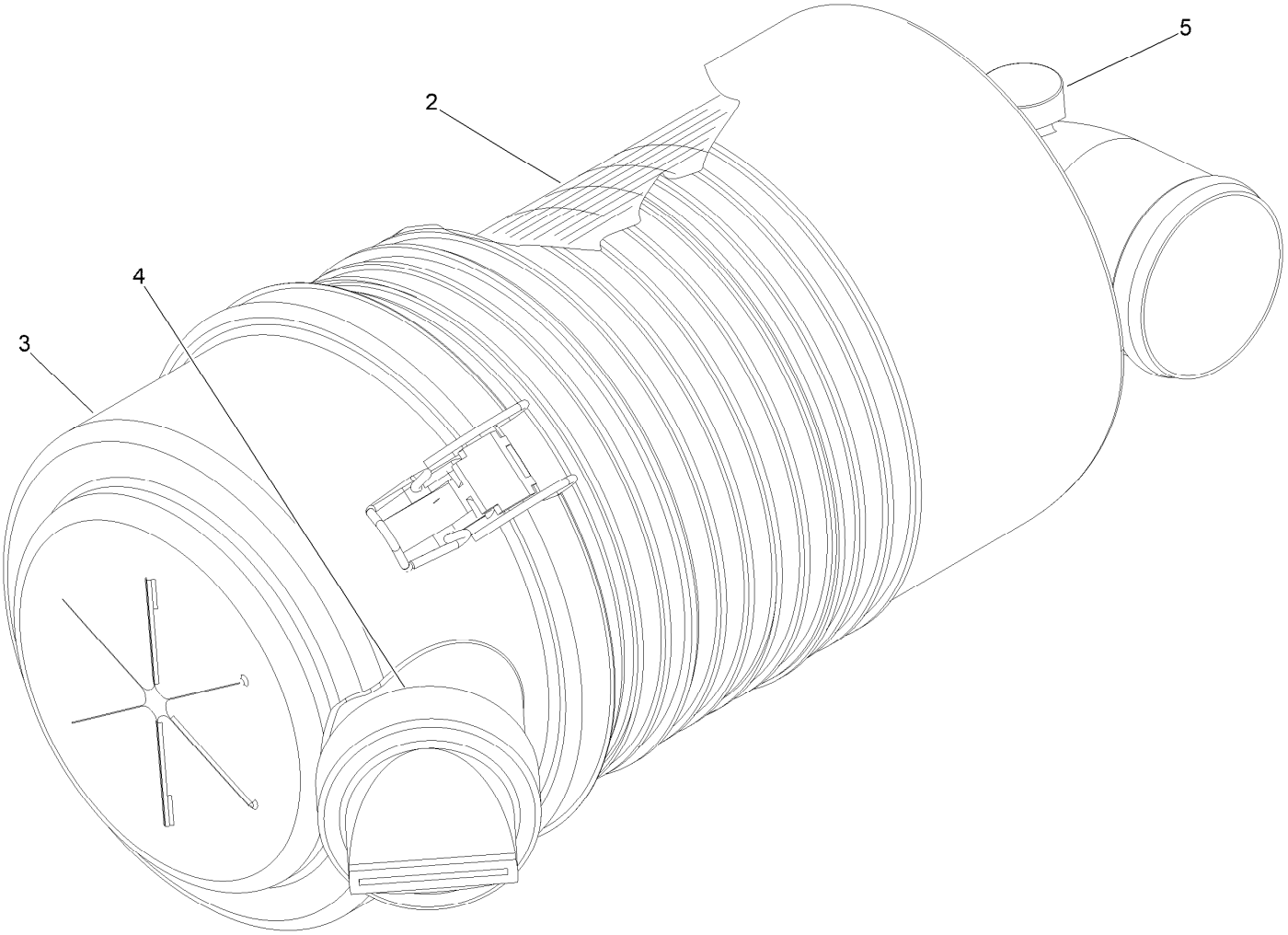

Air Cleaner Assembly No. 106-5277 (continued)

Ref.	Part Number	Qty.	Description
2	108-3810	1	Filter-Air
3	98-9771	1	Cover ASM
4	87-9400	1	Valve-Vacuator
5	285-17	1	Plug-Pipe

Cylinder Block Assembly

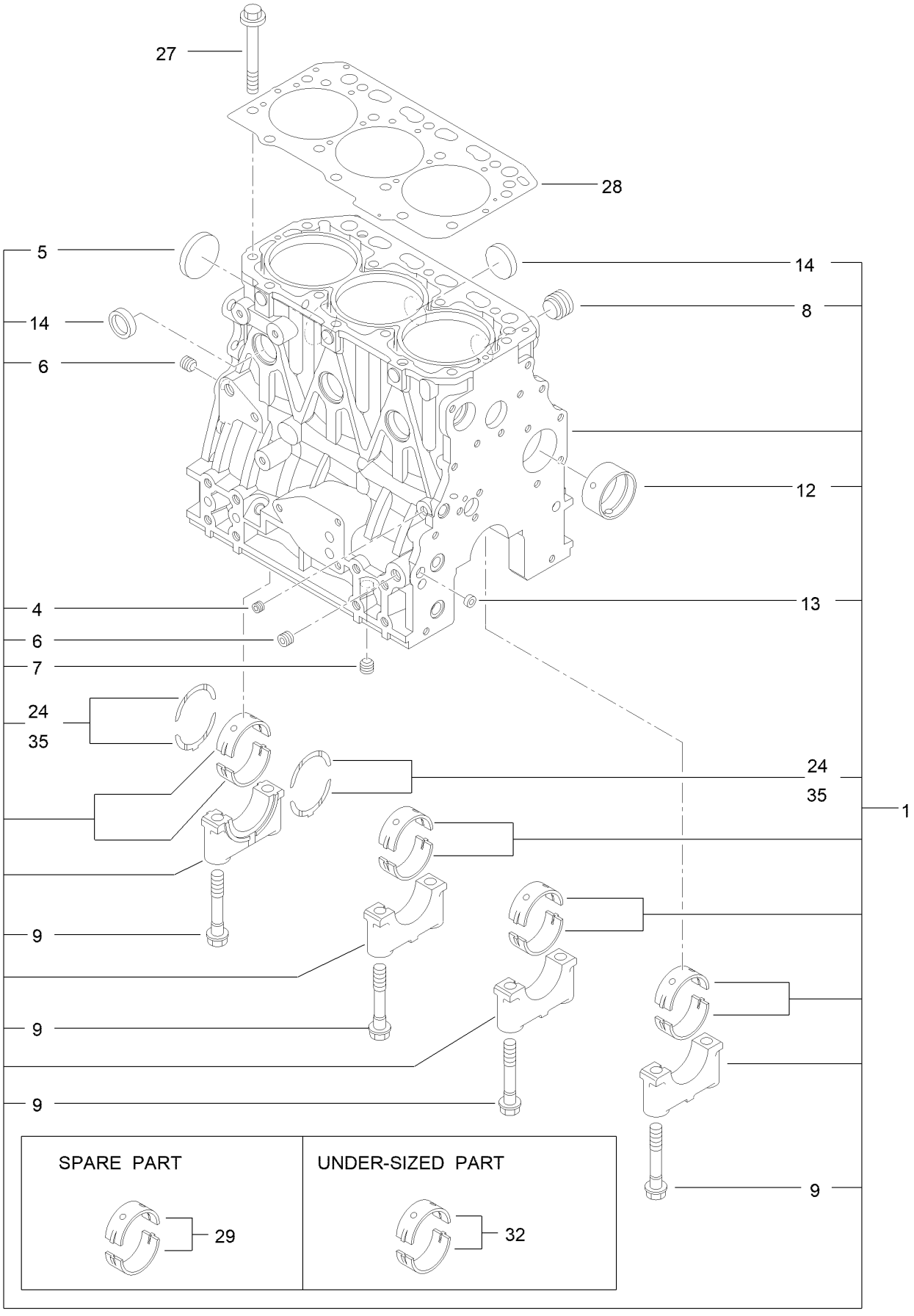

Cylinder Block Assembly (continued)

Ref.	Part Number	Qty.	Description
1	127-4717	1	Cylinder Block ASM
4	125-6969	1	Plug
5	125-6980	1	Plug
6	125-6973	2	Plug
7	125-6973	1	Plug
8	125-7170	1	Plug
9	125-7007	8	Bolt
12	125-7108	1	Bushing
13	125-7237	1	Plug
14	125-7239	6	Plug
24	125-7010	2	Metal-Thrust
27	125-7006	14	Bolt
28	127-4716	1	Head Gasket ASM
29	125-6981	4	Metal-Main
32	125-7009	4	Metal-Main (0.25)
35	125-7011	1	Metal-Thrust (0.25)

Gear Housing Assembly

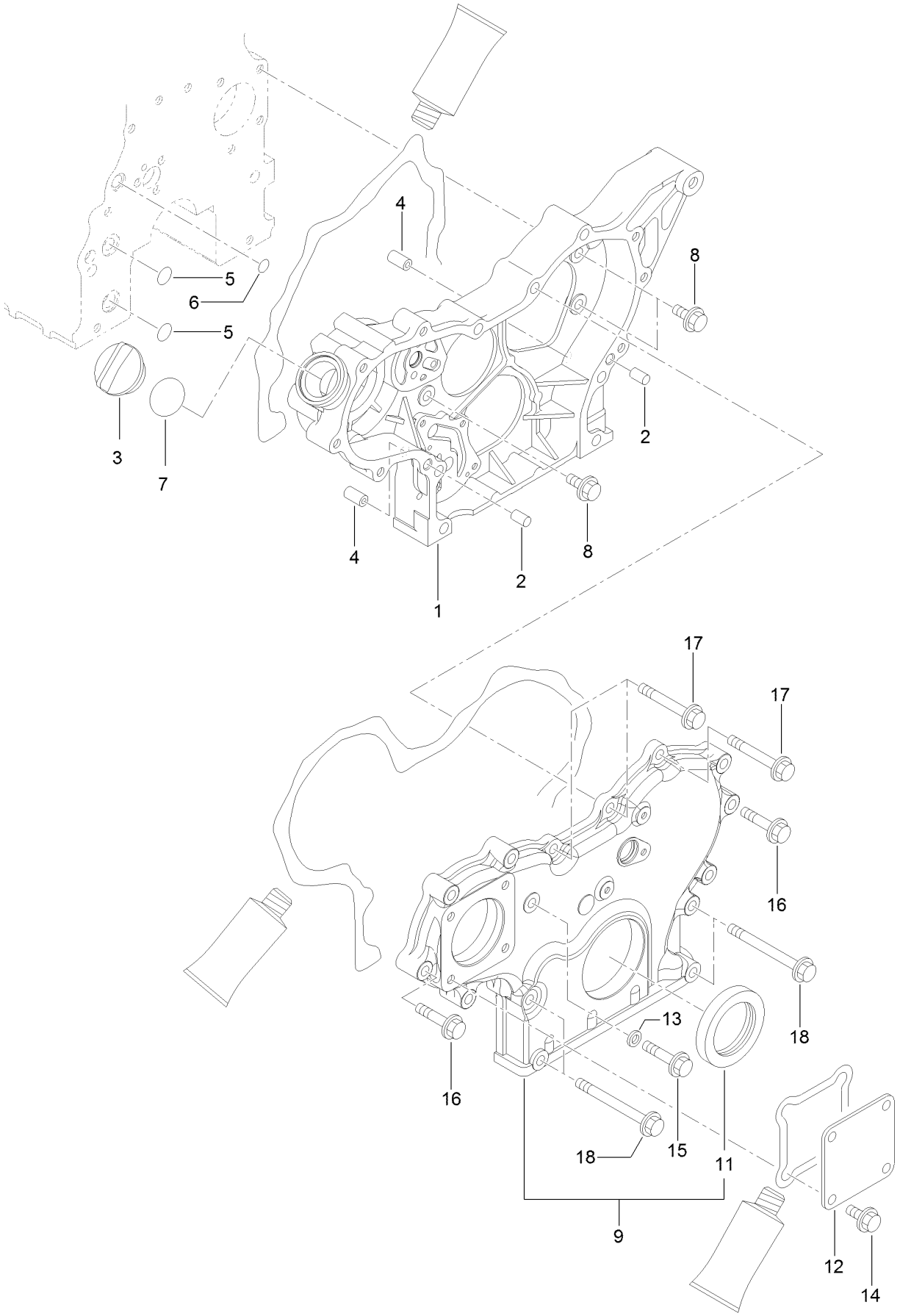

Gear Housing Assembly (continued)

Ref.	Part Number	Qty.	Description
1	127-3023	1	Case-Gear
2	125-6995	2	Pin
3	125-6972	1	Cover-Filler
4	125-7107	2	Pipe
5	125-6909	2	O-Ring
6	127-2973	1	O-Ring
7	125-7197	1	O-Ring
8	100-6928	3	Bolt
9	127-3024	1	Gearcase Cover ASM
11	125-6944	1	Seal-Oil
12	125-6977	1	Cover
13	125-7174	1	Washer-Seal
14	100-6928	4	Bolt
15	125-7217	1	Bolt
16	125-7218	7	Bolt
17	125-7222	3	Bolt
18	125-7224	4	Bolt

Flywheel Housing and Oil Sump Assembly

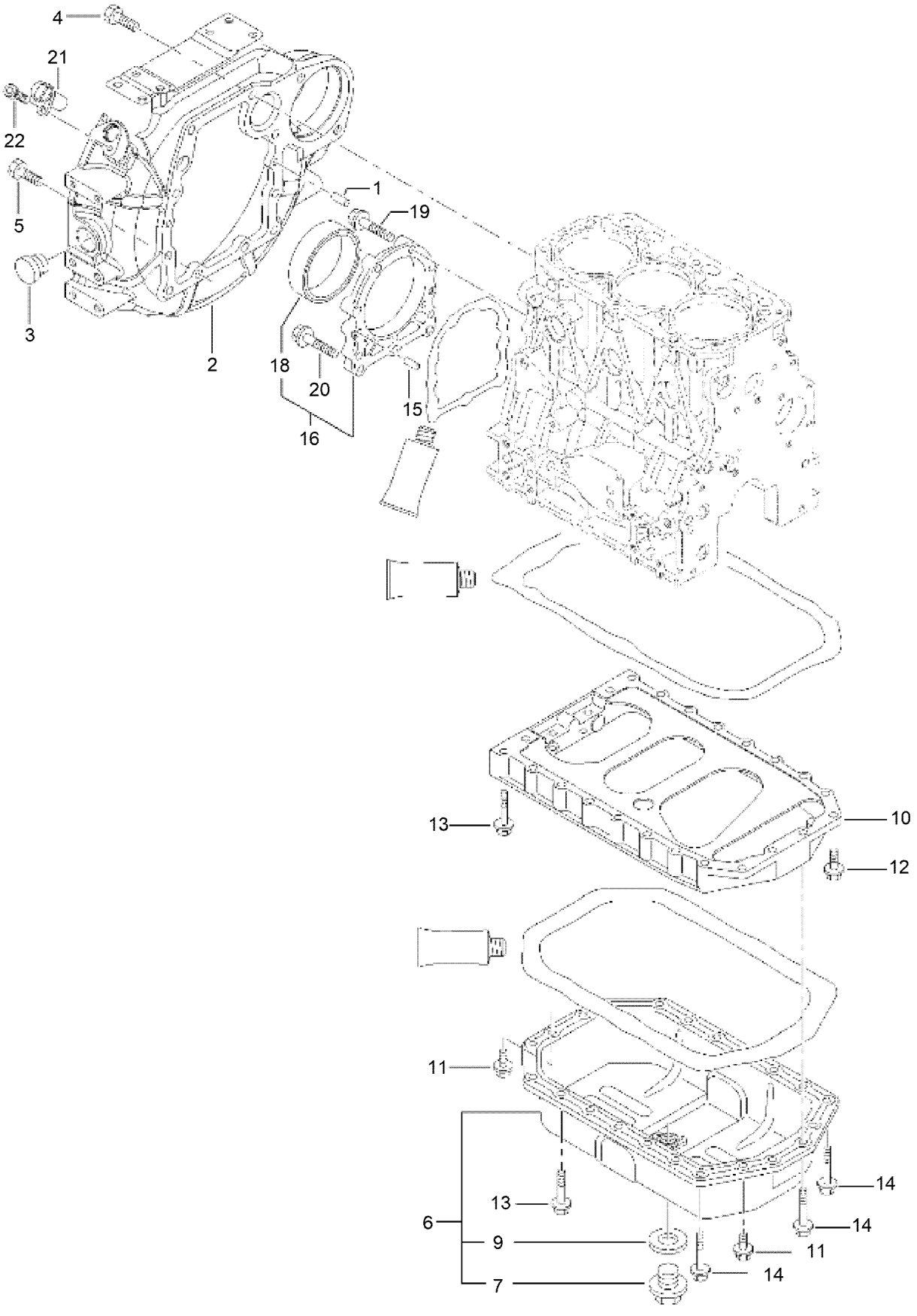

Flywheel Housing and Oil Sump Assembly (continued)

Ref.	Part Number	Qty.	Description
1	125-6995	2	Pin
2	127-3025	1	Housing-Flywheel
3	125-6910	1	Cap
4	125-7226	6	Bolt
5	125-7227	4	Bolt
6	127-3755	1	Oil Pan ASM
7	125-6912	1	Plug-Drain
9	125-7177	1	Washer-Seal
10	127-3756	1	Spacer
11	100-6928	4	Bolt
12	125-7215	2	Bolt
13	125-7219	16	Bolt
14	125-7220	4	Bolt
15	125-6995	2	Pin
16	125-6996	1	Case ASM
18	125-7106	1	Seal-Oil
19	125-7045	6	Bolt
20	125-7217	3	Bolt
21	127-3062	1	Sensor-Rev, Flywheel
22	127-3184	1	Bolt

Cylinder Head and Cover Assembly

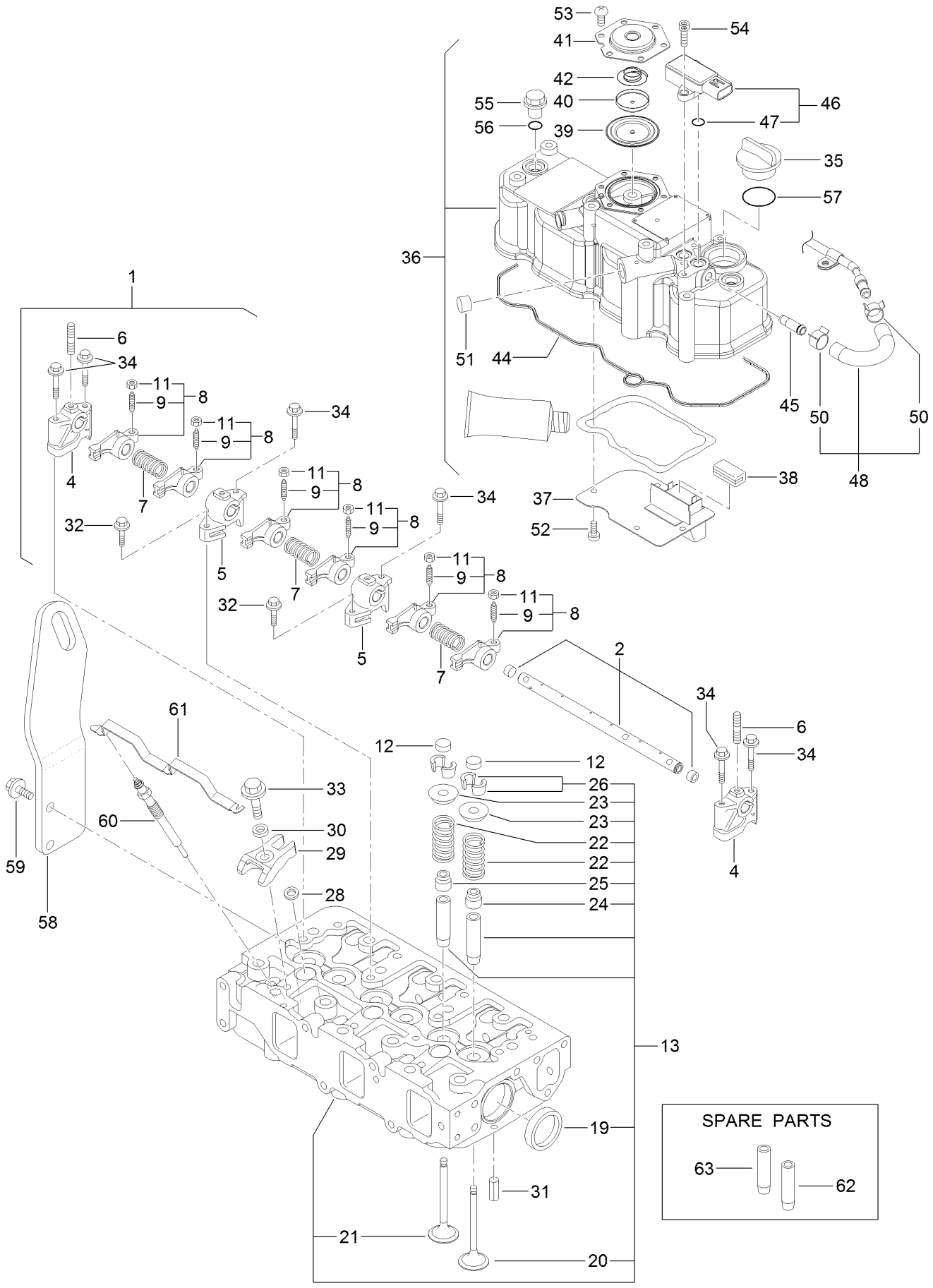

Cylinder Head and Cover Assembly (continued)

Ref.	Part Number	Qty.	Description
1	127-3757	1	Shaft ASM
2	127-3758	1	Shaft
4	127-2974	2	Support
5	127-2975	2	Support
6	127-3759	3	Stud
7	127-2995	3	Spring
8	127-2989	6	Arm-Rocker
9	125-7013	6	Screw-Adjust, Valve
11	125-7014	6	Nut
12	127-2996	6	Cap-Valve
13	127-4720	1	Cylinder Head ASM
19	125-7240	2	Plug
20	127-2990	3	Valve
21	127-4710	3	Valve
22	127-3012	6	Spring
23	127-3013	6	Retainer-Spring
24	127-2986	3	Seal-Stem, Valve
25	127-3027	3	Seal-Stem, Valve
26	127-3186	6	Pin-Cotter
28	127-3021	3	Gasket-Injector
29	127-3028	3	Retainer-Injector
30	127-2980	3	Washer-Injector
31	125-7184	2	Pin-Spring
32	125-7215	2	Bolt
33	125-7217	3	Bolt
34	125-7220	6	Bolt
35	125-6972	1	Cover-Filler
36	127-4719	1	Cylinder Head Cover ASM
37	127-2988	1	Plate
38	125-7012	1	Baffle
39	125-6959	1	Diaphragm
40	125-6960	1	Plate
41	125-6961	1	Plate-Breather
42	125-6962	1	Spring-Diaphragm
44	127-3856	1	Gasket-Valve Cover
45	127-3026	1	Joint
46	127-3029	1	Sensor-Pressure
47	127-3032	2	O Ring-Sensor, Pressure
48	127-3040	1	Hose ASM
50	127-3041	2	Clip-Hose
51	125-6913	1	Plug
52	125-7186	4	Screw
53	125-7186	6	Screw
54	127-3184	2	Bolt
55	125-6974	3	Knob
56	93-0418	3	O-Ring
57	125-7197	1	O-Ring
58	125-7111	1	Lifter
59	100-6928	2	Bolt
60	127-2991	3	Plug-Glow
61	127-3768	1	Connector-Plug, Glow
62	127-2979	3	Guide
63	127-2997	3	Guide-Valve

Suction Manifold Assembly

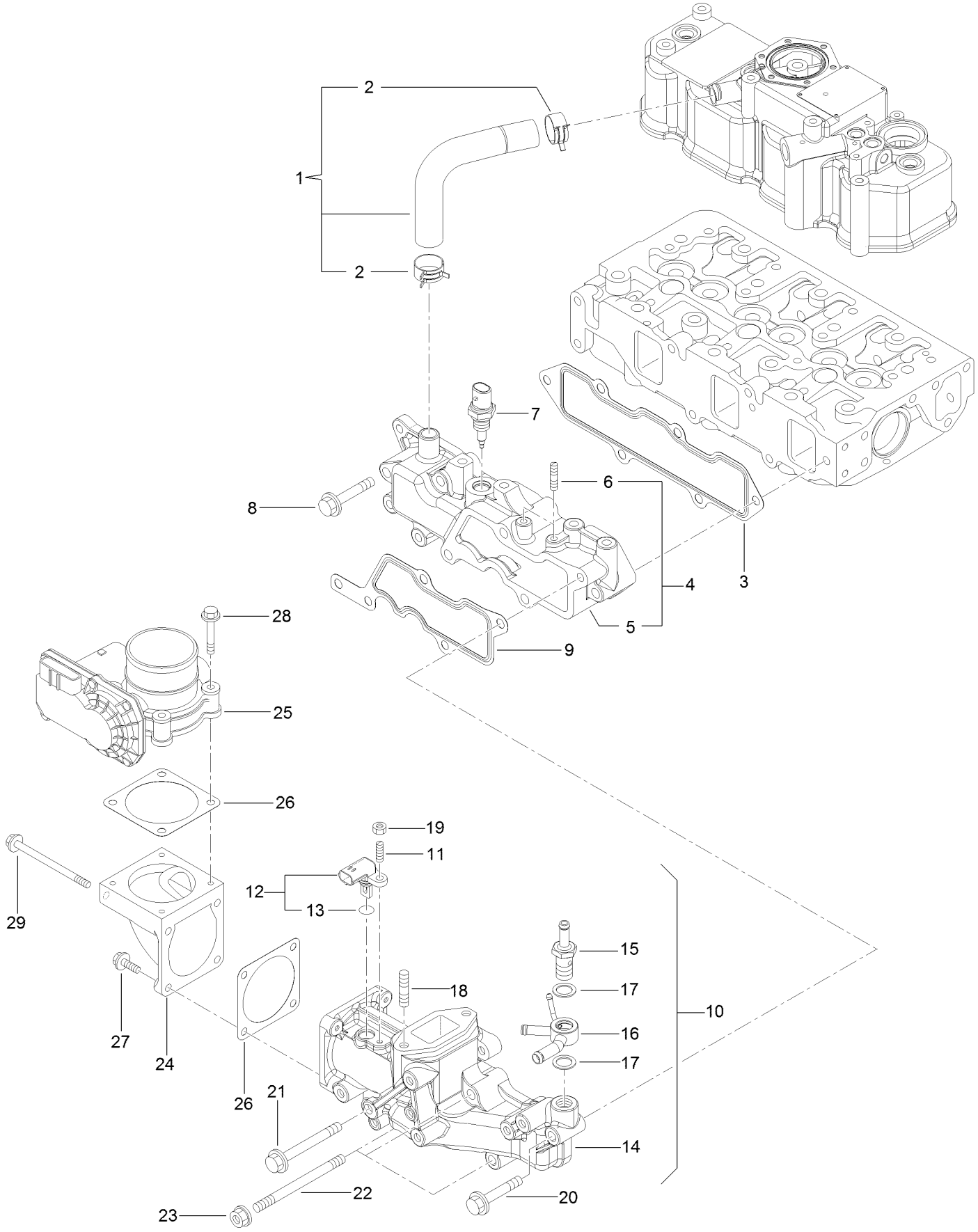

Suction Manifold Assembly (continued)

Ref.	Part Number	Qty.	Description
1	127-4704	1	Pipe
2	125-7040	2	Clip-Hose
3	127-3857	1	Gasket-Manifold, Intake
4	127-4722	1	Intake Manifold ASM
5	127-4721	1	Manifold-Intake
6	127-3180	2	Stud
7	127-3031	1	Sensor-Temp, Air
8	125-7220	3	Bolt
9	127-3034	1	Gasket-Collector
10	127-4725	1	Intake Collector ASM
11	127-4701	1	Stud
12	127-3030	1	Sensor-Temp, Air
13	127-3033	1	O-Ring
14	127-4724	1	Collector-Intake
15	127-3080	1	Joint-Hose
16	127-3081	1	Joint-Hose
17	127-3166	2	Washer-Seal
18	127-4774	2	Stud
19	127-4775	1	Nut
20	125-7220	1	Bolt
21	127-3178	1	Bolt
22	127-3182	3	Stud
23	125-7229	3	Nut
24	127-3035	1	Bend-Inlet
25	127-3036	1	Body-Throttle
26	127-3037	2	Gasket-Throttle
27	125-7209	2	Bolt
28	125-7211	4	Bolt
29	127-3177	2	Bolt

Exhaust Manifold Assembly

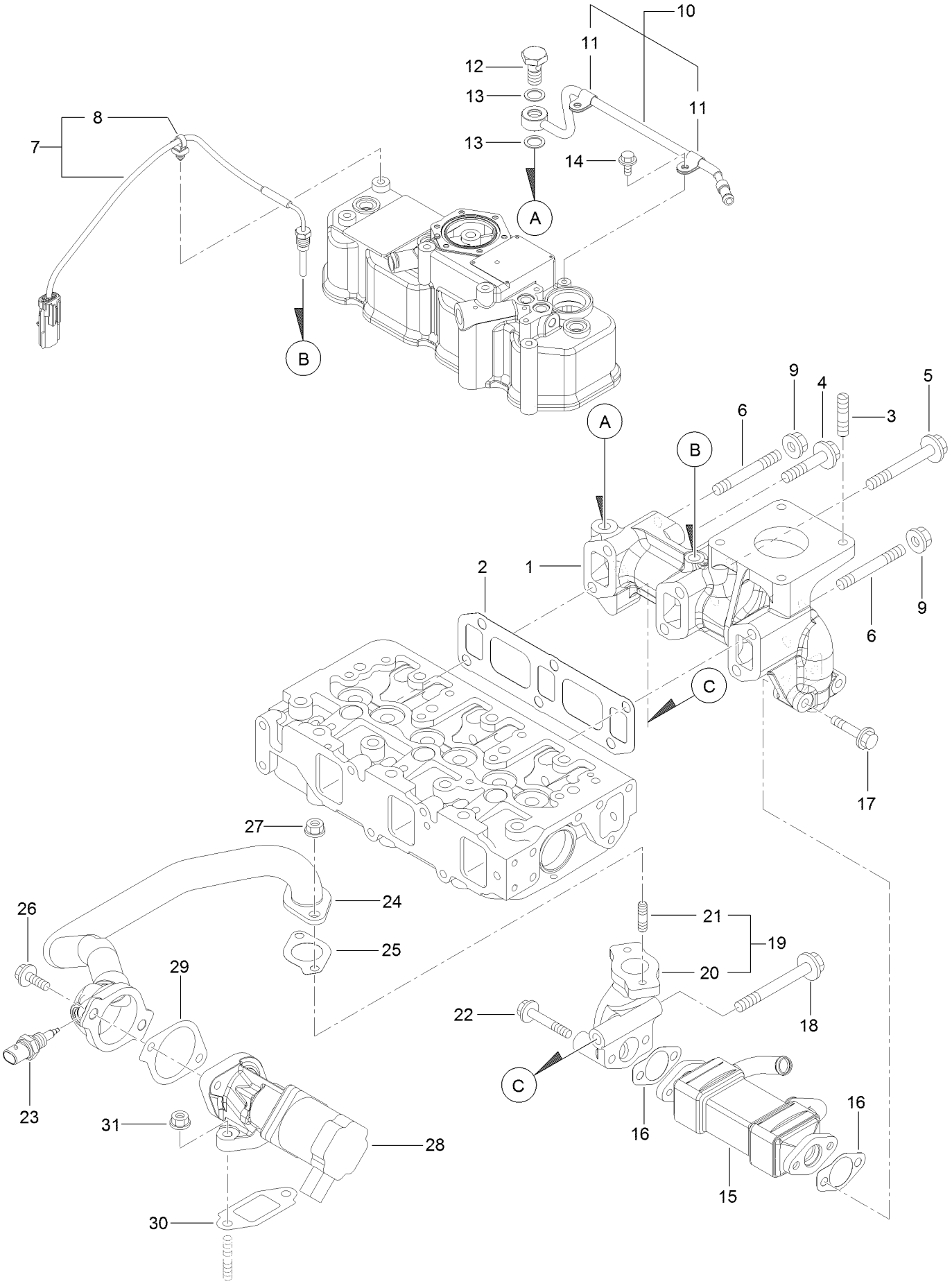

Exhaust Manifold Assembly (continued)

Ref.	Part Number	Qty.	Description
1	127-3775	1	Gasket-Manifold, Exhaust
2	127-4727	1	Manifold-Exhaust
3	127-3776	1	Bolt-Flange
4	127-3044	3	Bolt-M10
5	127-4756	2	Stud
6	127-3777	1	Sensor-Temp, Exhaust
7	127-3087	1	Band-Clip
8	125-7043	4	Stud
9	125-7230	2	Nut
10	127-3038	1	Exhaust Pipe ASM
11	127-3173	2	Clamp
12	127-3039	1	Bolt-Joint, Pipe
13	127-3174	2	Gasket
14	125-7206	2	Bolt
15	127-3042	1	Cooler-E G R
16	127-3043	2	Gasket-Cooler, E G R
17	127-2976	2	Bolt
18	127-3022	1	Bolt-Flange
19	127-3048	1	E G R Pipe ASM
20	127-3049	1	Pipe-Out, E G R
21	125-7043	2	Stud
22	125-7220	2	Bolt
23	127-3047	1	Sensor-Gas Temp, E G R
24	127-3780	1	E G R Pipe ASM
25	127-3016	1	Gasket
26	125-7215	2	Bolt
27	125-7229	2	Nut
28	127-3781	1	Valve-E G R
29	127-3050	1	Gasket-Intake Valve, E G R
30	127-3051	1	Gasket-Out Valve, E G R
31	125-7229	2	Nut

Diesel Particulate Filter Assembly

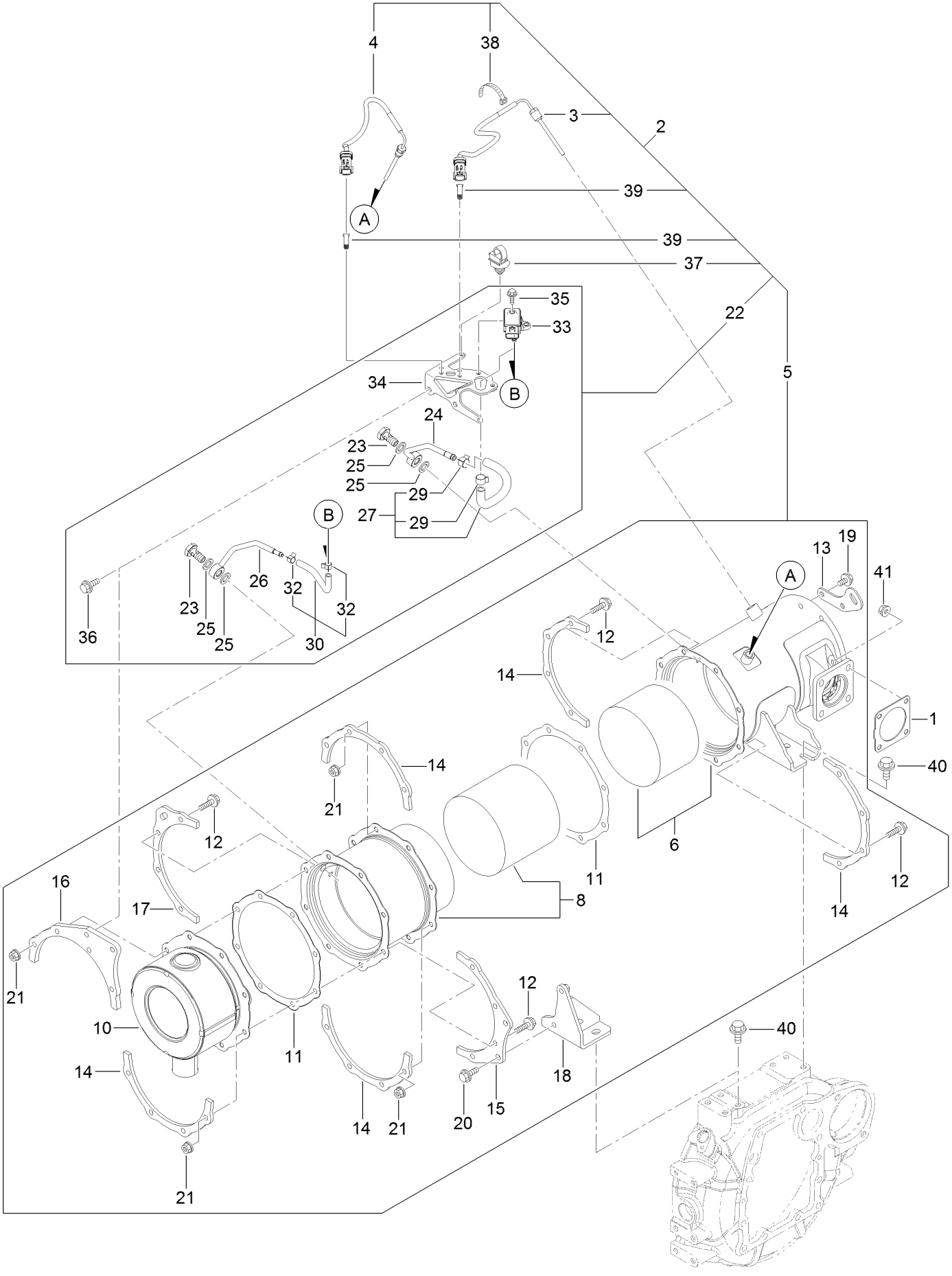

Diesel Particulate Filter Assembly (continued)

Ref.	Part Number	Qty.	Description
1	127-3019	1	Gasket
2	127-4742	1	Dpf Unit
3	127-4764	1	Sensor-Temp, Exhaust
4	127-3112	1	Sensor-Temp, Exhaust
5	127-4730	1	D P F ASM
6	127-4731	1	Case-Doc
8	127-4733	1	Case-Soot Filter
10	127-3786	1	Silencer-D P F
11	127-3859	2	Gasket-D P F
12	127-3055	16	Bolt
13	127-3788	1	Lifter-D P F
14	127-3789	5	Stiffener-D P F, A
15	127-3790	1	Stiffener-D P F, B
16	127-3791	1	Stiffener-D P F, C
17	127-3792	1	Stiffener-D P F, C
18	127-4737	1	Stay-Dpf
19	125-7213	2	Bolt
20	125-7594	2	Bolt
21	125-7229	16	Nut
22	127-4777	1	Sensor Pressure Unit
23	127-3039	2	Bolt-Joint, Pipe
24	127-3795	1	Pipe-Sensor
25	127-3056	4	Gasket-Sensor
26	127-3796	1	Pipe-Sensor
27	127-4746	1	Exhaust Hose ASM
29	127-3057	2	Clip-Hose
30	127-3059	1	Exhaust Pressure Hose ASM
32	127-3058	2	Clip-Hose
33	127-4749	1	Sensor-Pressure
34	127-3061	1	Bracket-Sensor, Pressure
35	125-7208	2	Bolt
36	125-7595	2	Bolt
37	127-3087	1	Band-Clip
38	127-3124	1	Band
39	127-3088	2	Clip-Connnector
40	127-4773	4	Bolt
41	125-7229	4	Nut

Camshaft and Driving Gear Assembly

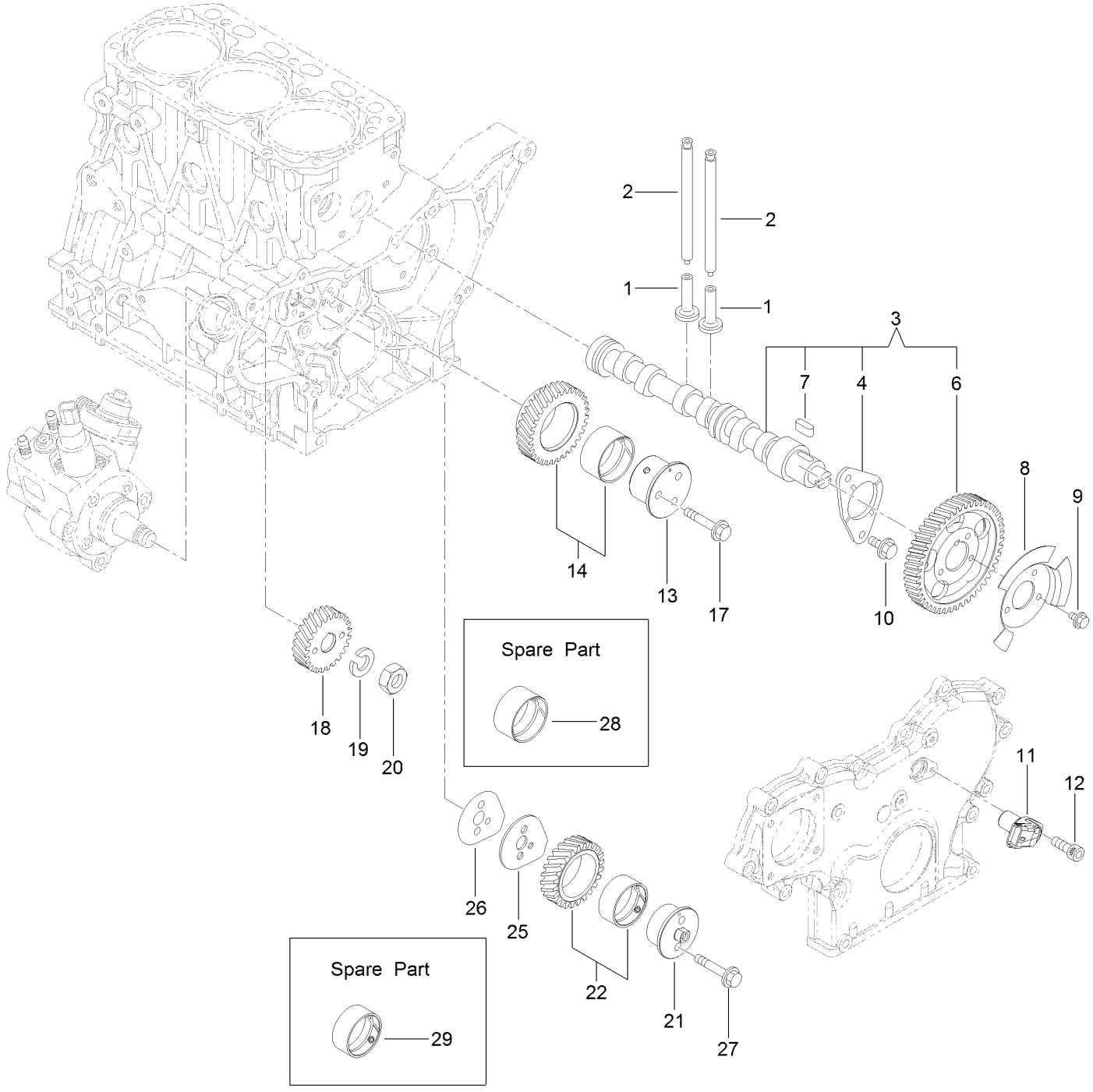

Camshaft and Driving Gear Assembly (continued)

Ref.	Part Number	Qty.	Description
1	125-7016	6	Tappet
2	125-7017	6	Rod-Push
3	127-3797	1	Camshaft ASM
4	125-7008	1	Metal-Thrust
6	127-3052	1	Gear-Camshaft
7	125-7185	1	Key
8	127-3053	1	Pulser-Camshaft
9	125-7205	3	Bolt
10	125-7213	2	Bolt
11	127-3054	1	Sensor-Rev, Gear
12	127-3184	1	Bolt
13	127-3063	1	Shaft-Idle, Gear A
14	127-3066	1	Idle Gear A ASM
17	125-7219	3	Bolt
18	127-3070	1	Gear-Pump, Supply
19	127-3167	1	Washer-Spring
20	127-3185	1	Nut-Lock
21	127-3064	1	Shaft-Idle, Gear B
22	127-3067	1	Idle Gear B ASM
25	127-3068	1	Plate-Idle, Shaft
26	127-3069	1	Gasket-Idle, Shaft B
27	125-7218	2	Bolt
28	125-6927	1	Bushing
29	127-3065	1	Bushing

Crankshaft and Piston Assembly

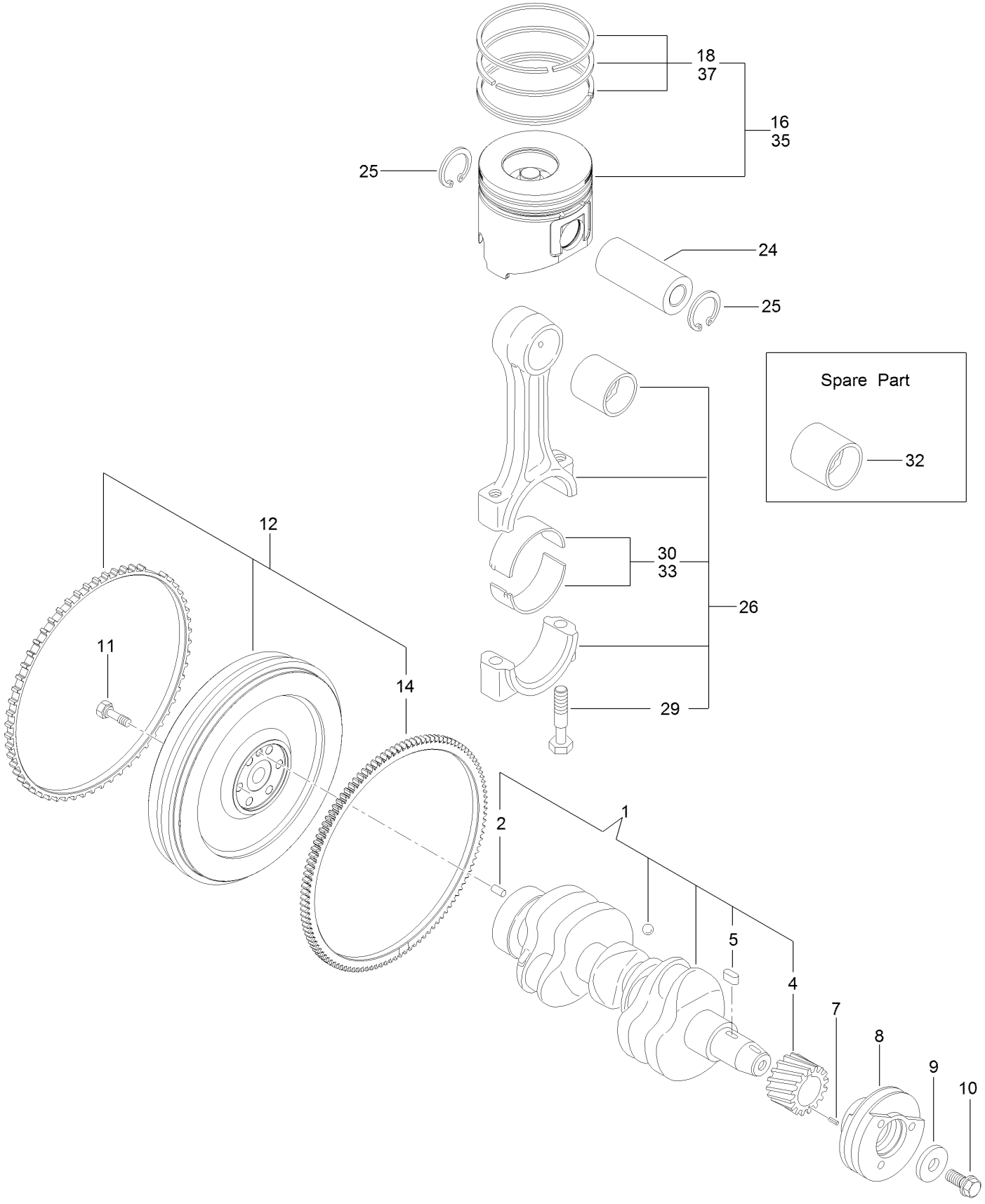

Crankshaft and Piston Assembly (continued)

Ref.	Part Number	Qty.	Description
1	127-3800	1	Crankshaft ASM
2	125-6995	1	Pin
4	125-6937	1	Gear
5	125-7185	1	Key
7	125-7182	1	Pin-Spring
8	127-3801	1	Pulley-V
9	125-7109	1	Washer
10	125-6956	1	Bolt
11	125-6951	6	Bolt
12	127-3802	1	Flywheel ASM
14	125-6943	1	Gear
16	127-4766	3	Piston ASM
18	127-4751	3	Piston Ring ASM
24	125-7030	3	Pin
25	125-7180	6	Ring
26	125-7242	3	Connecting Rod ASM
29	125-6955	6	Bolt
30	125-7018	3	Pin-Crank
32	125-6997	3	Pin-Piston
33	125-7019	3	Pin-Crank (.25)
35	127-4767	3	Piston ASM (0.25 O S)
37	127-4752	3	Ring Set (0.25 O S)

Lubrication and Oil System Assembly

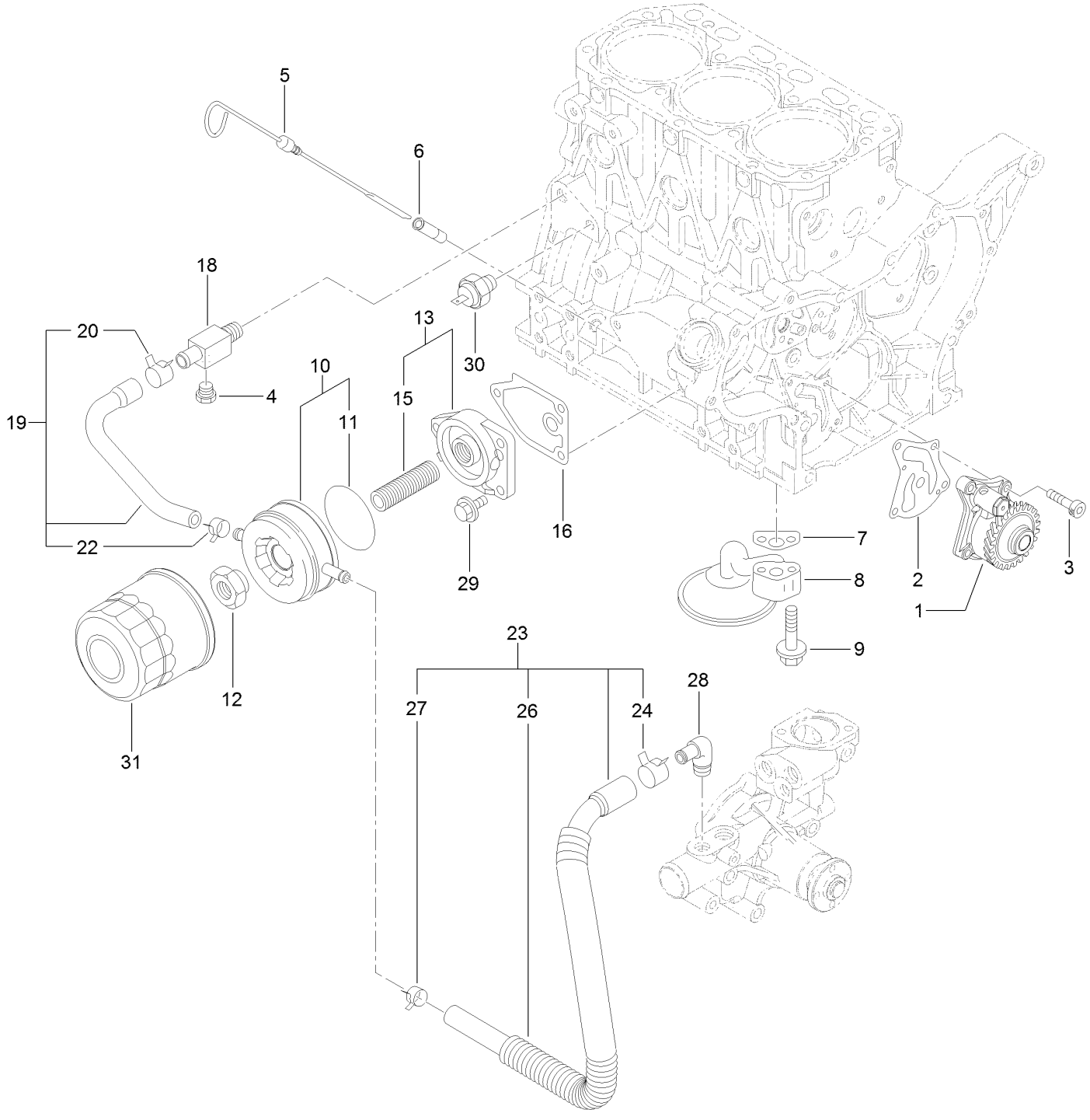

Lubrication and Oil System Assembly (continued)

Ref.	Part Number	Qty.	Description
1	127-4753	1	Oil Pump ASM
2	127-3004	1	Gasket
3	125-7232	4	Bolt
4	125-7171	1	Plug-Drain
5	125-6987	1	Dipstick
6	125-6954	1	Guide-Dipstick
7	125-7022	1	Gasket
8	127-3803	1	Pipe ASM
9	125-7217	2	Bolt
10	125-7074	1	Cooler ASM
11	125-7075	1	O-Ring
12	125-7041	1	Nut-Cooler, Oil
13	125-6989	1	Bracket ASM
15	125-7042	1	Stud
16	125-7024	1	Gasket
18	125-6990	1	Joint
19	125-7078	1	Pipe ASM
20	125-7162	1	Clip
22	125-7191	1	Clamp-Hose
23	127-3804	1	Pipe ASM
24	125-7162	1	Clip
26	127-3805	1	Tube
27	125-7191	1	Clamp-Hose
28	125-7001	1	Elbow
29	125-7595	3	Bolt
30	125-6918	1	Switch-Oil
31	125-7025	1	Filter-Engine, Oil

Cooling System Assembly

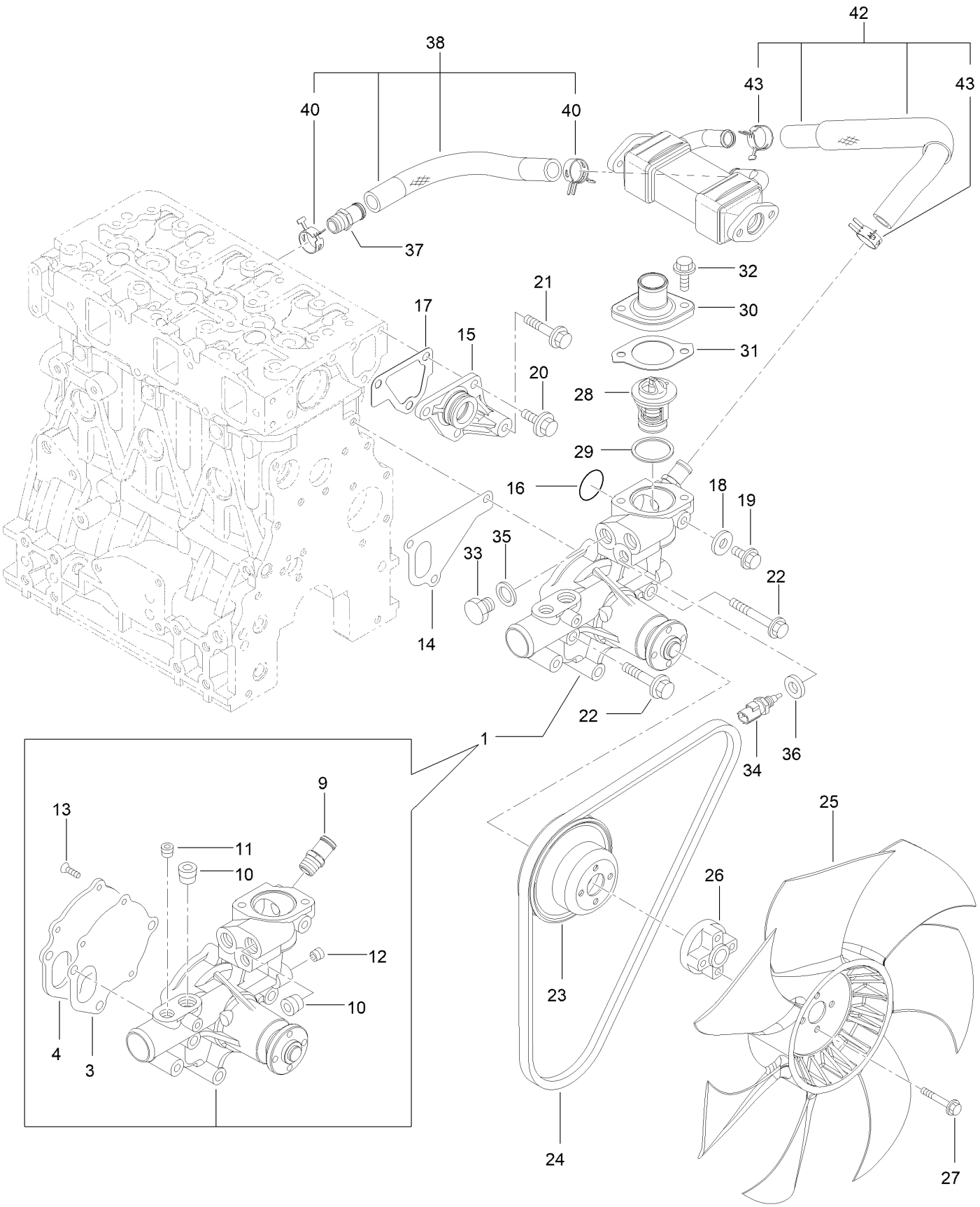

Cooling System Assembly (continued)

Ref.	Part Number	Qty.	Description
1	127-3071	1	Water Pump ASM
3	125-6998	1	Gasket
4	125-6999	1	Plate
9	127-3017	1	Joint
10	125-7123	2	Plug
11	127-3175	1	Plug
12	125-7195	1	Plug
13	125-7234	3	Screw
14	125-7047	1	Gasket
15	125-6986	1	Joint
16	125-7048	1	O-Ring
17	125-6978	1	Gasket
18	125-7192	1	Gasket
19	93-0362	1	Bolt
20	100-6928	3	Bolt
21	125-7219	1	Bolt
22	125-7222	3	Bolt
23	125-7039	1	V-Pulley
24	127-2998	1	V-Belt
25	127-4713	1	Fan
26	127-4768	1	Spacer
27	125-7211	4	Bolt
28	125-7029	1	Thermostat
29	125-7026	1	Gasket
30	125-7034	1	Cover
31	125-7110	1	Gasket
32	125-7594	2	Bolt
33	125-6953	1	Plug
34	125-7124	1	Sensor-Thermostat, CW
35	125-6979	1	Gasket
36	125-7176	1	Washer-Seal
37	127-3017	1	Joint
38	127-3072	1	Water In Pipe ASM
40	127-3020	2	Clip-Hose
42	127-3811	1	CW Pipe ASM
43	127-3020	2	Clip-Hose

Fuel System Assembly

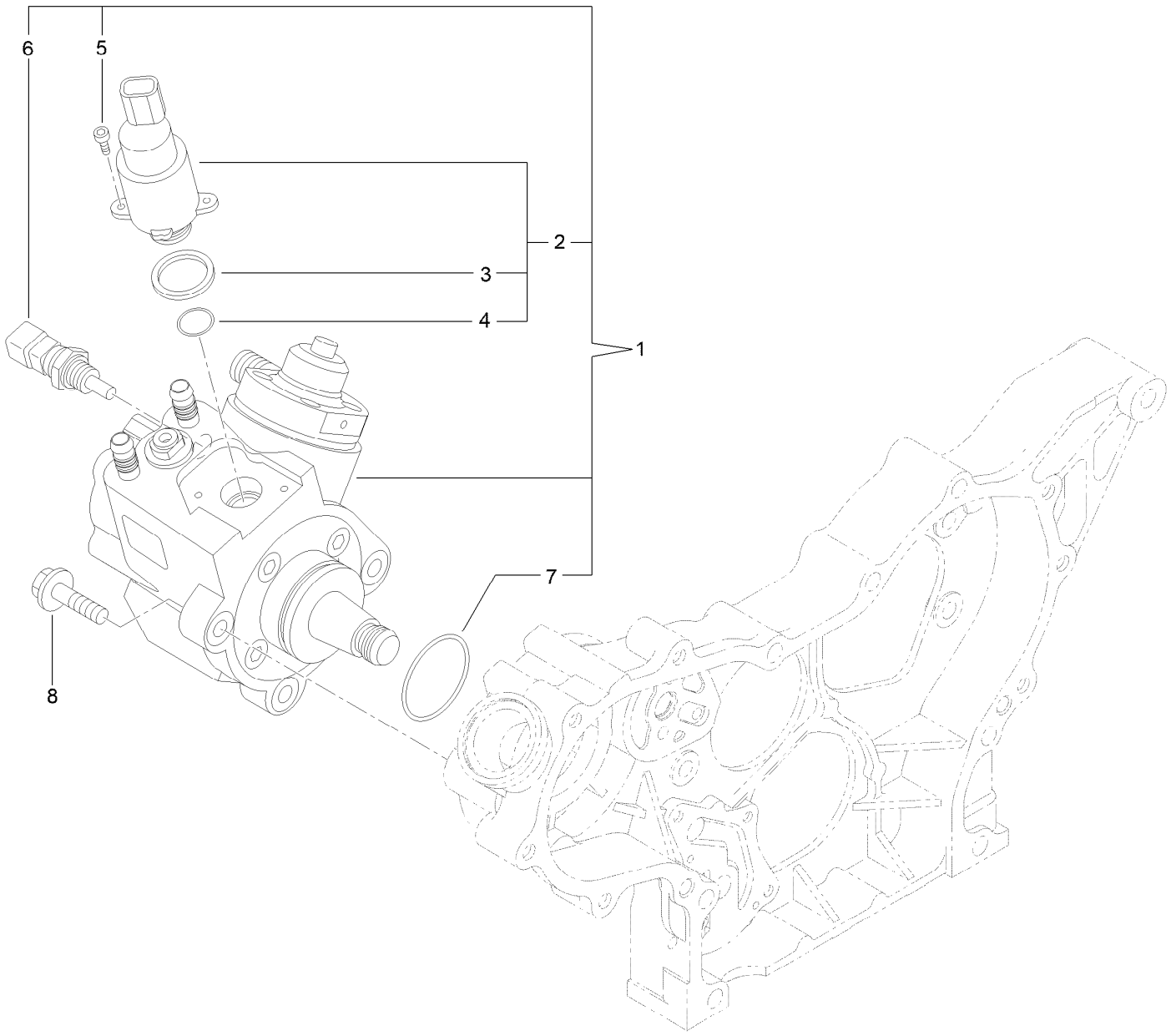

Fuel System Assembly (continued)

Ref.	Part Number	Qty.	Description
1	127-3073	1	Fuel Pump ASM
2	131-2103	1	Valve ASM
3	131-2105	3	Ring-Sealing
4	131-2106	1	O-Ring
5	131-2107	2	Bolt
6	131-2108	1	Sensor-Temperature
7	127-3074	1	O-Ring
8	125-7216	3	Bolt

Fuel Injection Valve Assembly

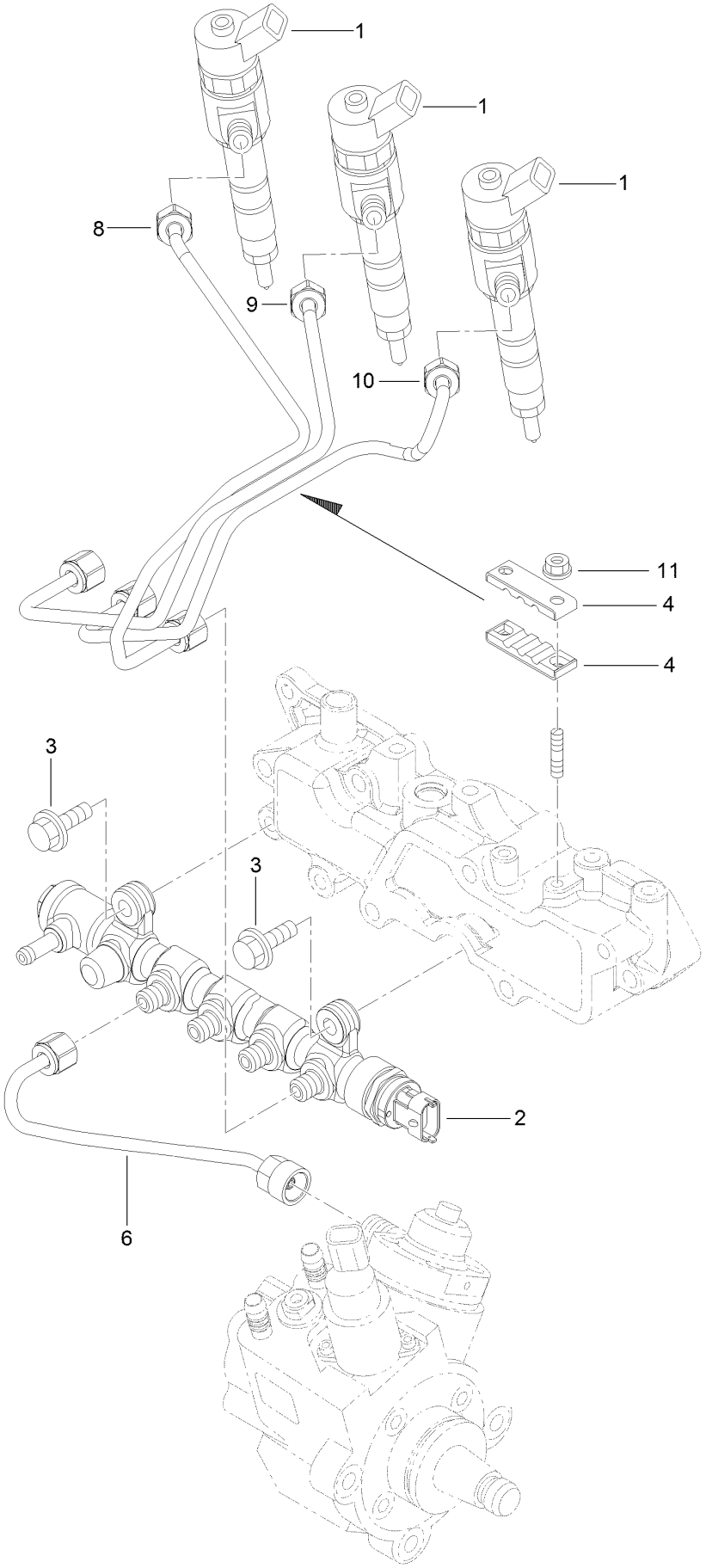

Fuel Injection Valve Assembly (continued)

Ref.	Part Number	Qty.	Description
1	127-4754	3	Injector ASM
2	127-3812	1	Rail ASM
3	125-7215	2	Bolt
4	127-3813	2	Retainer
6	127-3082	1	Rail In Pipe ASM
8	127-3814	1	Injection Pipe ASM
9	127-3083	1	Injection Pipe ASM
10	127-3084	1	Injection Pipe ASM
11	125-7231	2	Nut

Fuel Line Assembly

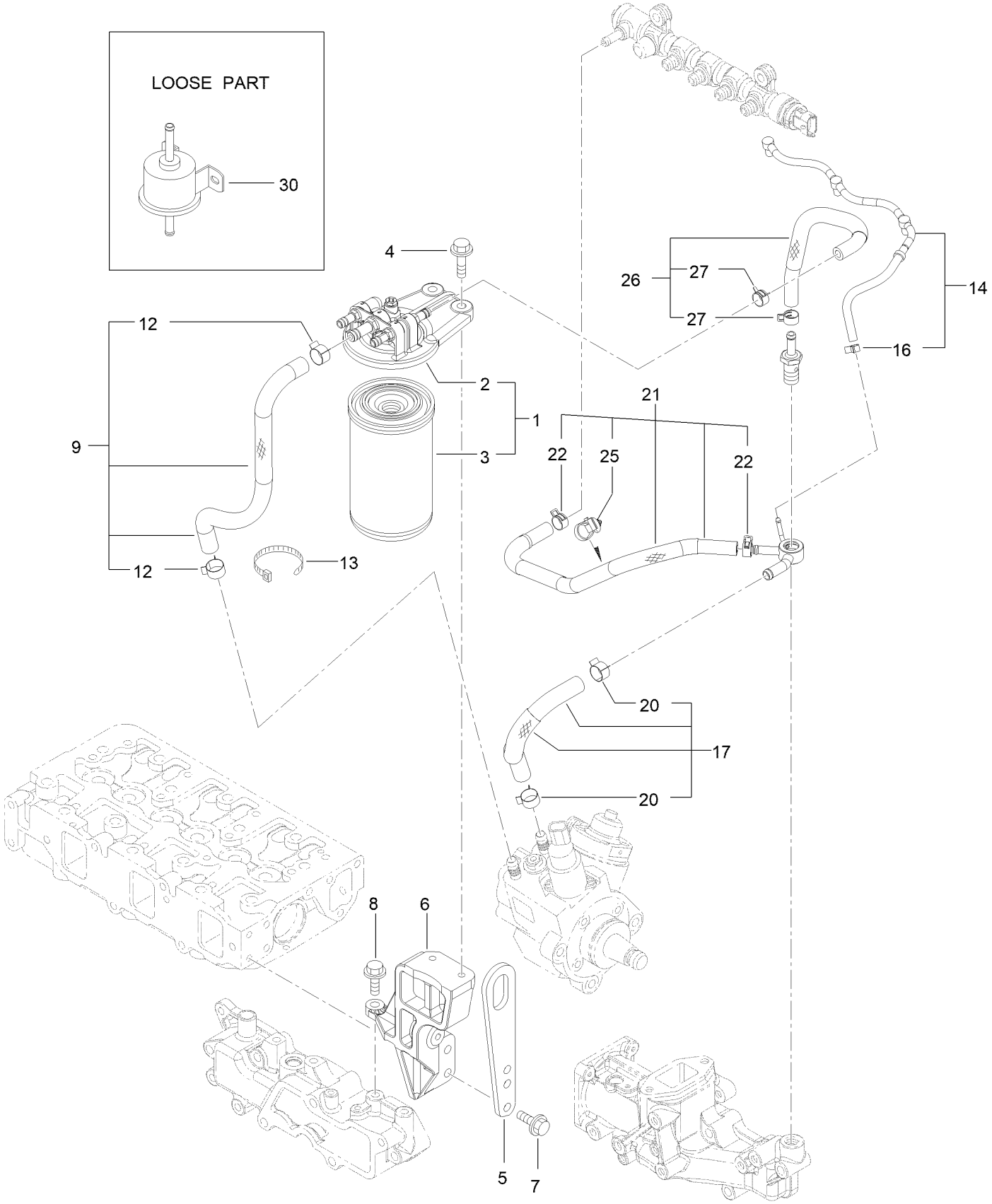

Fuel Line Assembly (continued)

Ref.	Part Number	Qty.	Description
1	127-3075	1	Fuel/Oil Filter ASM
2	127-3076	1	Fuel/Oil Filter Bracket ASM
3	125-8752	1	Filter-Fuel/Oil
4	125-7216	2	Bolt
5	125-7111	1	Lifter
6	127-3815	1	Filter Bracket ASM
7	125-7215	2	Bolt
8	125-7215	1	Bolt
9	127-3077	1	Fuel Pipe ASM
12	125-7191	2	Clamp-Hose
13	127-2981	1	Band
14	127-3816	1	Fuel/Oil Return Pipe ASM
16	127-3172	1	Clamp-Hose
17	127-3078	1	Fuel Pipe ASM
20	125-7191	2	Clamp-Hose
21	127-3817	1	Fuel Pipe ASM
22	127-2950	2	Clip-Hose
25	127-3087	1	Band-Clip
26	127-3079	1	Fuel Pipe ASM
27	127-2950	2	Clip-Hose
30	121-5613	1	Pump-Fuel, Electric

Starting Motor Assembly

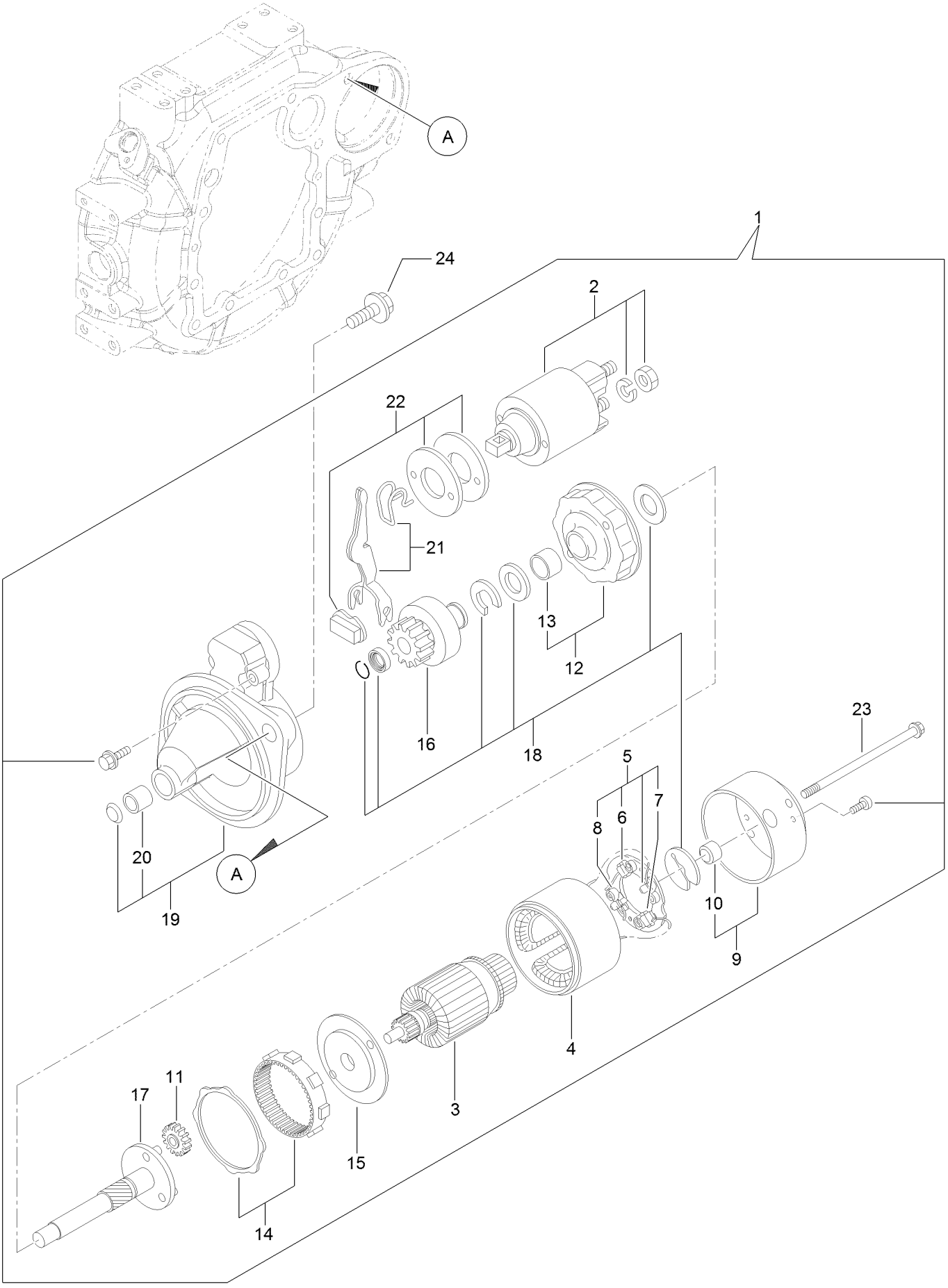

Starting Motor Assembly (continued)

Ref.	Part Number	Qty.	Description
1	127-3818	1	Starter ASM
2	127-3819	1	Switch ASM
3	127-3820	1	Armature ASM
4	127-3821	1	Yoke ASM
5	127-3822	1	Brush Holder ASM
6	127-3823	2	Brush
7	127-3824	1	Brush Set
8	127-3825	4	Spring
9	127-3826	1	Cover ASM
10	127-3827	1	Metal
11	127-3828	3	Gear
12	127-3829	1	Bracket
13	127-3830	1	Bracket
14	127-3831	1	Gear
15	127-3832	1	Bracket
16	127-3833	1	Pinion ASM
17	127-3834	1	Shaft
18	127-3835	1	Washer Set
19	127-3836	1	Case ASM
20	127-3837	1	Metal-Starter
21	127-3838	1	Lever Set
22	127-3839	1	Dust Cover ASM
23	127-3840	2	Bolt-Through
24	125-7225	2	Bolt

Generator Assembly

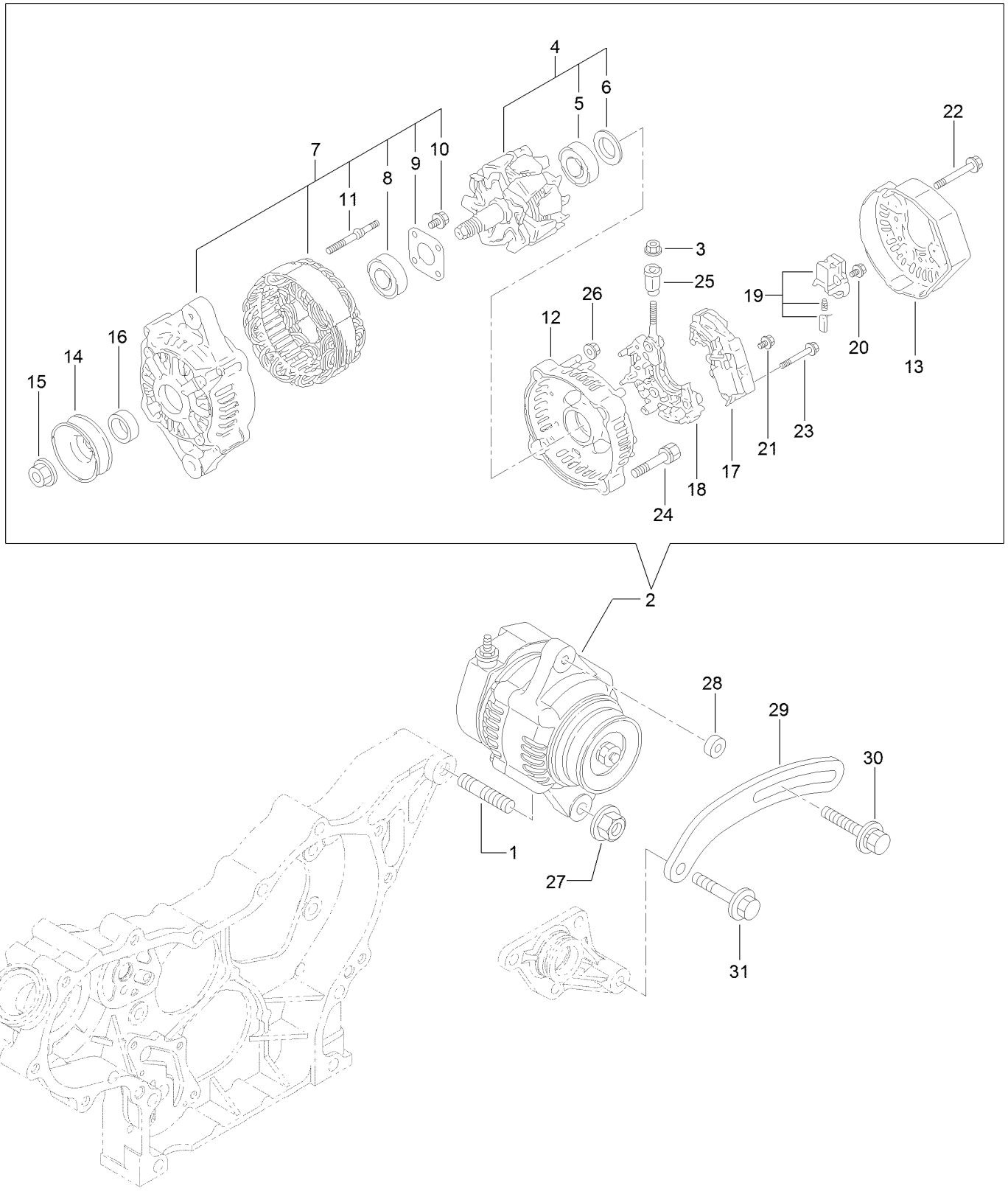

Generator Assembly (continued)

Ref.	Part Number	Qty.	Description
1	127-3011	1	Stud
2	127-3841	1	Generator
3	127-3190	1	Nut
4	127-3843	1	Rotor ASM
5	127-2983	1	Bearing-Ball
6	127-2962	1	Cover
7	127-3844	1	Frame ASM
8	127-2958	1	Bearing-Ball
9	127-2959	1	Plate-Retainer
10	127-2960	4	Screw
11	127-2961	2	Stud
12	127-3845	1	Frame
13	127-3846	1	Cover
14	127-2954	1	Pulley
15	127-2955	1	Nut
16	127-2957	1	Collar
17	127-3847	1	Regulator ASM
18	127-3848	1	Holder
19	127-2993	1	Holder
20	127-2965	6	Screw
21	127-2966	1	Screw
22	127-2967	3	Bolt
23	127-2968	2	Screw
24	127-2969	2	Bolt
25	127-2970	1	Bushing-Insulation
26	127-2971	2	Nut
27	125-7230	1	Nut
28	125-6947	1	Spacer
29	127-2977	1	Adjuster
30	125-7134	1	Bolt
31	125-7219	1	Bolt

Electric Parts Assembly

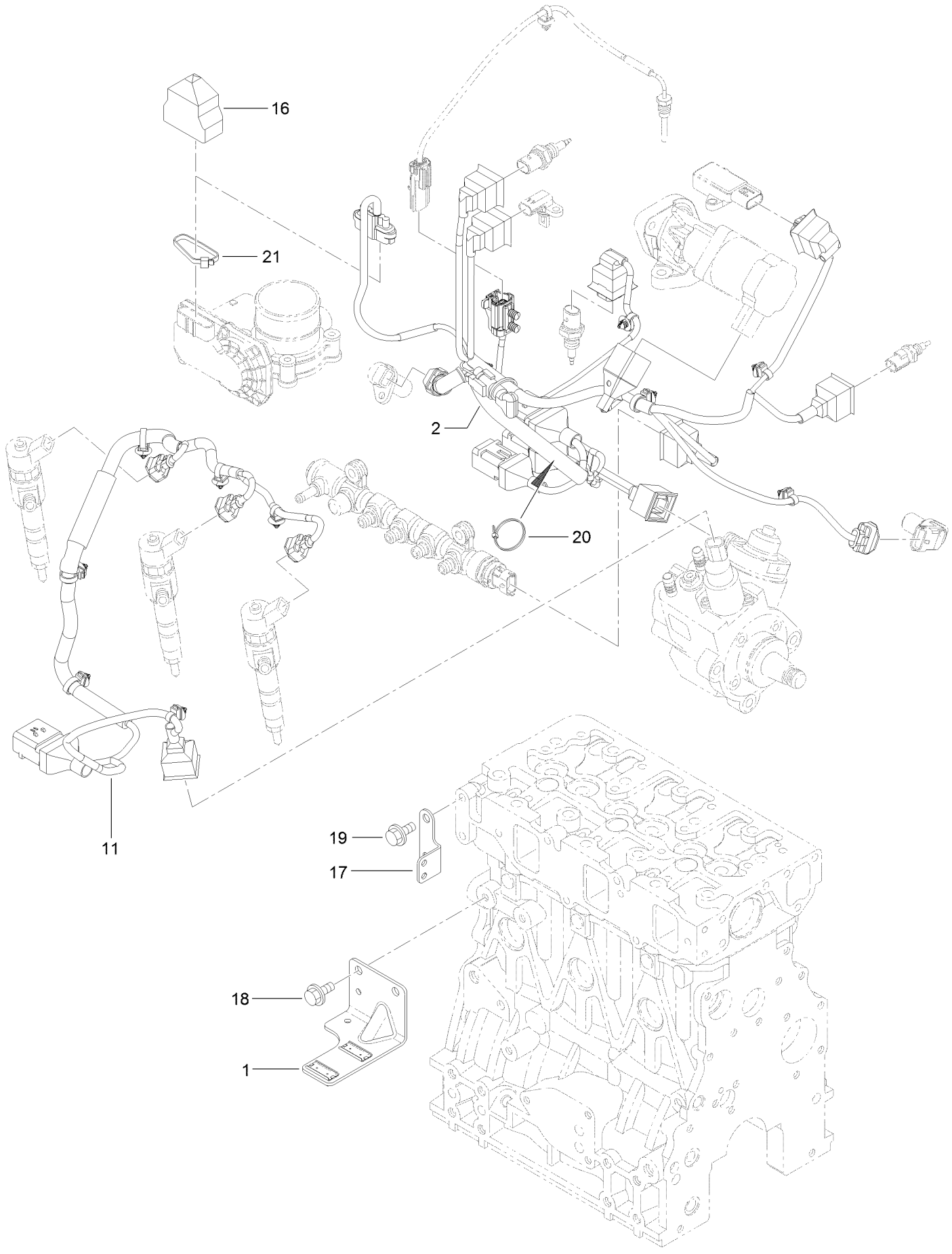

Electric Parts Assembly (continued)

Ref.	Part Number	Qty.	Description
1	127-3086	1	Bracket-Connector
2	127-4755	1	Harness
11	130-7438	1	Harness
16	127-3089	1	Boot-Type, Cap
17	127-3090	1	Bracket-Harness
18	93-0362	2	Bolt
19	93-0362	2	Bolt
20	127-3187	1	Band
21	127-3188	1	Band

Gasket Set

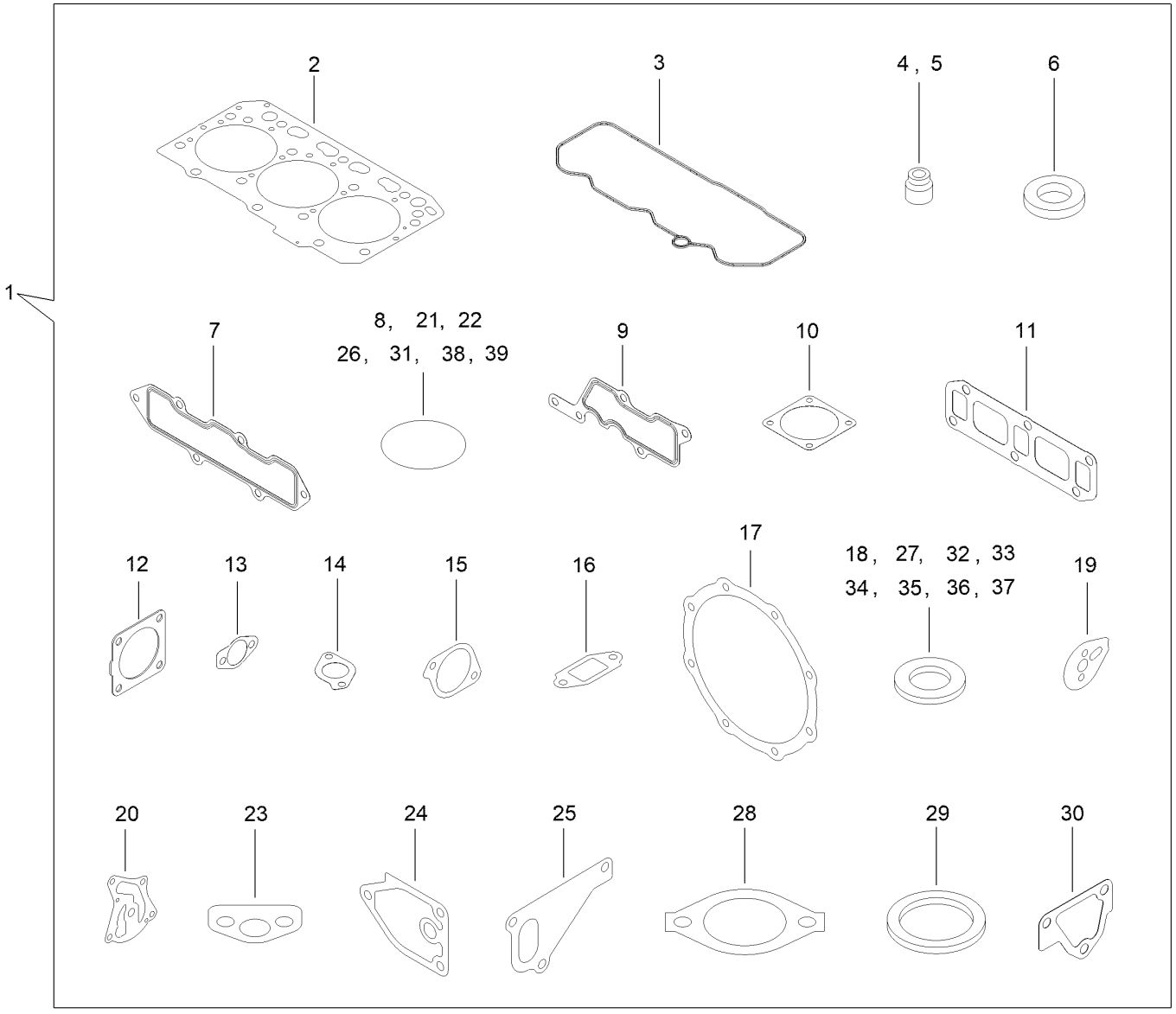
1
2
3
4 , 5
6
7
8, 21, 22
26, 31, 38, 39
9
10
11
12
13
14
15
16
17
18, 27, 32, 33
34, 35, 36, 37
19
20
23
24
25
28
29
30

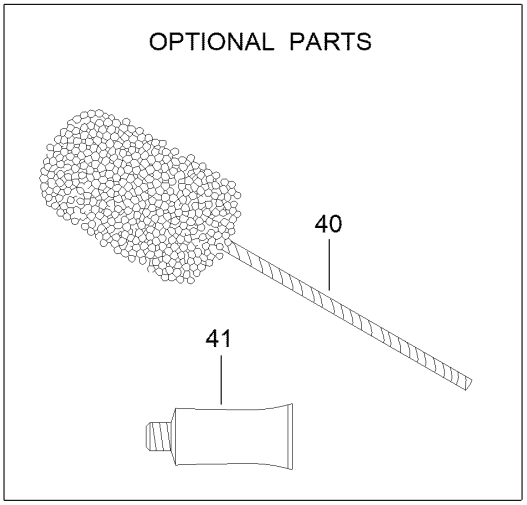
OPTIONAL PARTS
40
41

Gasket Set (continued)

Ref.	Part Number	Qty.	Description
1	127-4776	1	Gasket Kit
2	127-4716	1	Head Gasket ASM
3	127-3856	1	Gasket-Valve Cover
4	127-2986	3	Seal-Stem, Valve
5	127-3027	3	Seal-Stem, Valve
6	127-3021	3	Gasket-Injector
7	127-3857	1	Gasket-Manifold, Intake
8	127-3033	1	O-Ring
9	127-3034	1	Gasket-Collector
10	127-3037	2	Gasket-Throttle
11	127-3775	1	Gasket-Manifold, Exhaust
12	127-3019	1	Gasket
13	127-3043	2	Gasket-Cooler, E G R
14	127-3016	1	Gasket
15	127-3050	1	Gasket-Intake Valve, E G R
16	127-3051	1	Gasket-Out Valve, E G R
17	127-3859	2	Gasket-D P F
18	127-3056	4	Gasket-Sensor
19	127-3069	1	Gasket-Idle, Shaft B
20	127-3004	1	Gasket
21	125-6909	2	O-Ring
22	127-2973	1	O-Ring
23	125-7022	1	Gasket
24	125-7024	1	Gasket
25	125-7047	1	Gasket
26	125-7048	1	O-Ring
27	125-6979	1	Gasket
28	125-7110	1	Gasket
29	125-7026	1	Gasket
30	125-6978	1	Gasket
31	127-3074	1	O-Ring
32	125-7174	1	Washer-Seal
33	125-7176	1	Washer-Seal
34	127-3166	2	Washer-Seal
35	125-7177	1	Washer-Seal
36	125-7192	1	Gasket
37	127-3174	2	Gasket
38	93-0418	3	O-Ring
39	125-7197	2	O-Ring
40	127-3000	1	Hone
41	125-7248	1	Gasket-Liquid

Attachments and Accessories

For 03954 Reelmaster 5510-D Traction Unit

Product Name	Model/Part
Operator Cooling Fan	03247
Switch Panel-Universal Sunshade	03248
Operator Golf Ball Guard, Reelmaster 3100/3500/5010 or Groundsmaster 3500/4300 Series Traction Unit	03614
Verticutter for 7in Reel Cutting Unit	03619
8-Blade Radial Reel DPA Cutting Unit with 7in Reel	03638
8-Blade Forward Swept Reel DPA Cutting Unit with 7in Reel	03639
11-Blade Forward Swept Reel DPA Cutting Unit with 7in Reel	03641
7-in, 11 Blade ES (RR) DPA Cutting Unit	03643
CrossTrax All-Wheel Drive Kit, Reelmaster 5010-H, 5410-D, or 5510-D Series Traction Unit	03645
Air Ride Seat Suspension Kit	03667
Turf Evaluator	04399
Wheel Weight Kit	104-1478
Premium All Purpose Grease (Tube)	108-1190
Rear Lift Cylinder Limit Kit	110-9604
5in Air Cleaner Safety Element	114-4057
Premium Synthetic Bio-Degradable Hydraulic Fluid (5 Gallon Pail)	119-2157
Premium Synthetic Bio-Degradable Hydraulic Fluid (55 Gallon Drum)	119-2158
Premium Engine Oil 10w30 (55 Gallon Drum)	121-6392
Premium Engine Oil 10w30 (5 Gallon Pail)	121-6393
Smooth Rear Tire	127-2796
Hi-Back Seat Cover	133-1308
Smooth Front Tire	133-2940
PX Hydraulic Fluid (5 Gal)	133-8086
PX Hydraulic Fluid (55 Gal)	133-8087
Pin and Lanyard Asm	136-8045
Beacon Kit	138-2699
Power Harness Kit (RM5XXX)	138-2994
Fuel Cooler Kit [yanmar Rm5x10, Gm4300]	139-6040
Work Lights Kit, Groundsmaster and Reelmaster Traction Units with Universal Sunshade	140-1554
MVP Kit-Hyd Hose	145-2576
MVP Kit 1000 Hour-rm5x10/gm4300 Yanmar	145-2580
Brush and Handle Kit	29-9100
White Universal Sunshade	30669
Red Universal Sunshade	30671
EU Light Kit	31579
New Red Paint - Gallon	361-11
Dark Metallic Gray Aerosol Paint	361-12
Semi-Gloss Black Spray Paint	361-9
Air Dry Red Paint - Qt	5340
Spark Arrestor	98-9099

Notes:



Count on it.