Form No. 3476-231 Rev A

TORO®

Count on it.

Parts Catalog

Multi Pro® 5800 Turf Sprayer with GeoLink® Precision Spray System

Model No. 41394GK—Serial No. 419000000 and Up

Register at www.Toro.com.
Original Instructions (EN)

CE

3476-231 A

Ordering Replacement Parts

To order replacement parts, please supply the part number, the quantity, and the description of each part desired.

Understanding Reference Numbers

Each identified part in an illustration has a reference number. The reference number for a part also appears in the parts list, along with other information about the part.

This catalog uses two special reference number formats, one to indicate parts in a service assembly and another to indicate the quantity of a given part in an illustration.

Service Assembly Reference Numbers

Parts in service assemblies have reference numbers in the form a:b. The a represents the reference number of the entire service assembly and the b represents a sequential number unique to each part within the service assembly.

For example, a wheel assembly might be identified by reference number 6, the tire by 6:1, the valve by 6:2, and the wheel by 6:3. When you order the assembly identified by reference number 6, you receive all parts identified by reference numbers 6:1,6:2, and 6:3. However, you may also order any part individually. Reference numbers of this type appear in illustration and in parts lists.

Reference Numbers Indicating Quantity

In an illustration, if a reference number indicates more than one part, the reference number has the form nX y. The n represents the quantity of the part, the X is the multiplication symbol, and the y represents the reference number.

For example, in an illustration, the reference number 2X 37 means that two of the parts identified by reference number 37 are indicated.

Contents

Frame Assembly 5
Front Axle Assembly 6
Cylinder Assembly No. 138-6102 7
Hub Assembly No. 119-6003 8
Wheel and Tire Assembly No. 127-1100 9
Front Suspension Assembly 10
Seat Base Assembly 11
Seat, Fresh Water Tank and Roll-Over Protection System Assembly 12
Control Console Assembly 14
Brake Pedal Assembly 16
Traction Pedal Assembly 17
Throttle Assembly 18
Dash Panel Assembly 20
Control Console and Manifold Mount Assembly 22
Engine Mounting and Bell Housing 23
Muffler and Air Cleaner Assembly 24
Air Cleaner Assembly No. 106-5277 26
Engine and Shroud Assembly 27
Fuel Tank Assembly 28
Radiator Assembly 29
Hydraulic Pump and Filter Assembly 30
Piston Pump Assembly No. 117-0685 32
Control Assembly No. 115-4446 34
Tandem Pump Assembly No. 138-6193 35
Hydraulic Tank Assembly 36
Hydrauic Hose Assembly 37
Pump Control Valve Assembly No. 117-0708 39
Steering Hydraulic Assembly 40
Steering Valve Assembly No. 137-7509 41
Hydraulic Valve Assembly No. 137-4076 42
Boom Lift Assembly 44
Hydraulic Cylinder Assembly No. 117-0701 45
On-Off Boom Lift Valve Assembly No. 136-2400 46
Rear Drive Assembly 47
Planetary Assembly No. 136-2913 49
RH Brake Assembly No. 100-3069 50
LH Brake Assembly No. 100-3070 51
Hydraulic Motor Assembly No. 132-5631 52
Hydraulic Motor Assembly No. 136-2373 53
Electrical Assembly 54
Wire Harness Assembly No. 122-3653 56
Tank and Saddle Assembly 57
Tank Assembly No. 117-8005 58
Spray Tank Lid Assembly No. 138-6283 59
Tank Mounting and Filter Assembly 60
Filter Assembly No. 130-7096 61
Spray System Hose Assembly 62
Spray Pump and Valve Assembly 64
Pump Assembly No. 145-3382 66
Agitation Hose Assembly No. 139-3093 68
Hydraulic Motor Assembly No. 117-0706 69
On/Off 2-Way Valve Kit No. 131-0249 70
Manifold Connection Assembly 72
ASC-10 Mounting Assembly 74

© 2026—The Toro® Company
8111 Lyndale Avenue South
Bloomington, MN 55420

Contact us at www.Toro.com.
Printed in the USA.
All Rights Reserved

Contents (continued)

Crankcase Assembly 76
Oil Pan Assembly 77
Cylinder Head Assembly 78
Gear Case and Oil Filter Cartridge Assembly 79
Cylinder Head Cover Assembly 80
Oil Dipstick and Guide Assembly 81
Main Bearing Case Assembly 82
Cam Shaft and Idle Gear Assembly 83
Piston and Crankshaft Assembly 84
Flywheel and Sensor Switch Assembly 85
Ignition Coil and Delivery Pipe Assembly 86
Engine Covers Assembly 87
Solenoid Cover and Hydraulic Pump Cover 88
Alternator, Pulley and Fan Assembly 89
Alternator Assembly No. 131-9567 90
Starter Installation Assembly 91
Starter Components Assembly 92
Water Flange and Thermostat Assembly 93
Water Pump Assembly 94
Valve and Rocker Arm Assembly 95
Inlet Manifold Assembly 96
Exhaust Manifold Assembly 97
Wire Harness Assembly 98
Electronic Control Unit Assembly 99
Miscellaneous Engine Parts 100
Attachments and Accessories 101

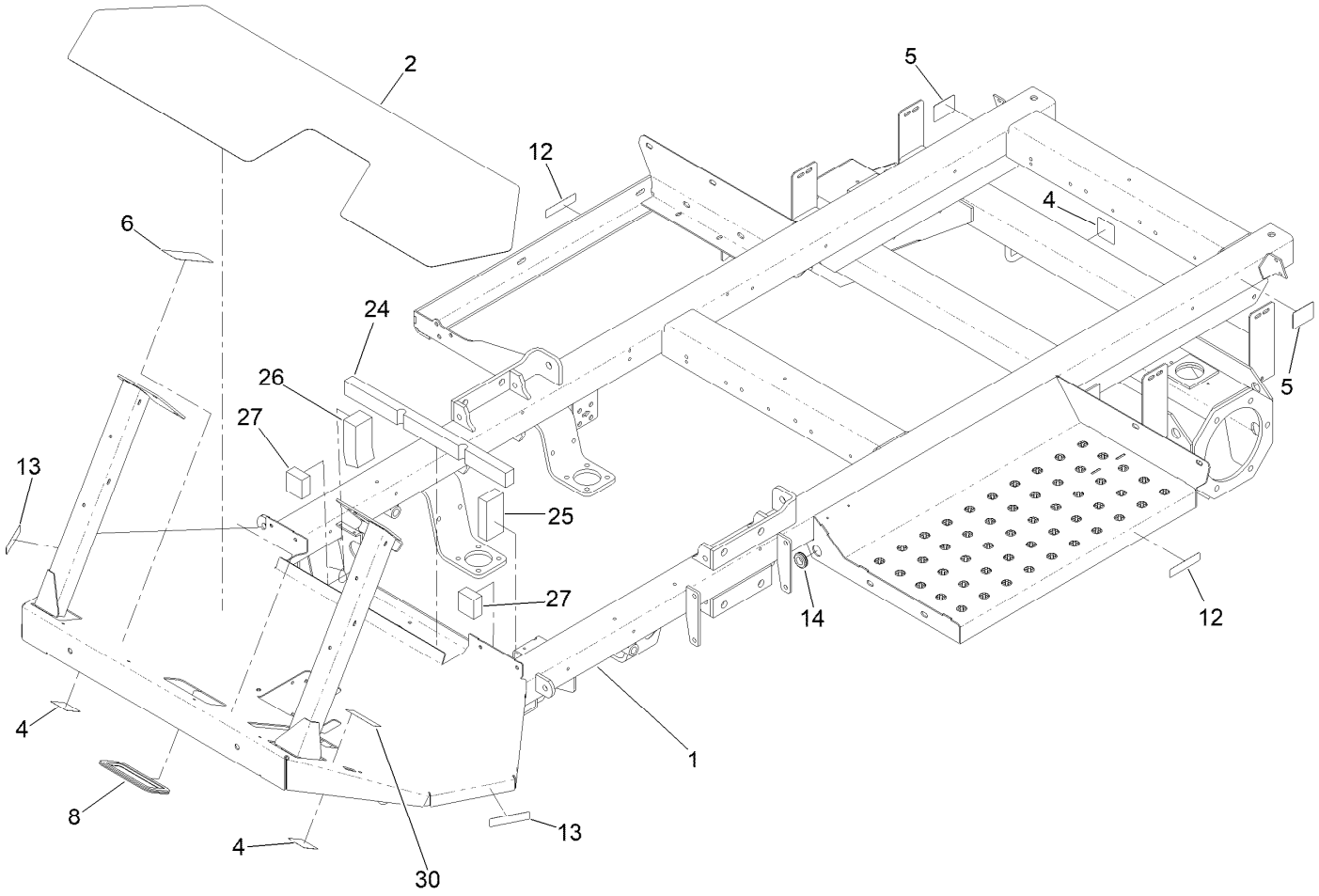

Frame Assembly

Ref.	*Part Number*	*Qty.*	*Description*
1	130-7070-03	1	Frame
2	104-8863	1	Tread-Floor
4	120-0623	3	Decal-Tie Down, Towing
5	107-8667	2	Decal-Jacking
6	107-8724	1	Decal-Traction
8	119-0599	1	Trim-Seal
12	107-8732	2	Decal-Torque (CE)
13	107-8731	2	Decal-Torque (CE)
14	240-6	1	Grommet-Rubber
24	131-5751	1	Foam-Seal
25	131-5752	1	Foam-Seal
26	131-5753	1	Foam-Seal
27	131-5754	2	Foam-Seal
30	136-2351	1	Decal-Brake, Parking

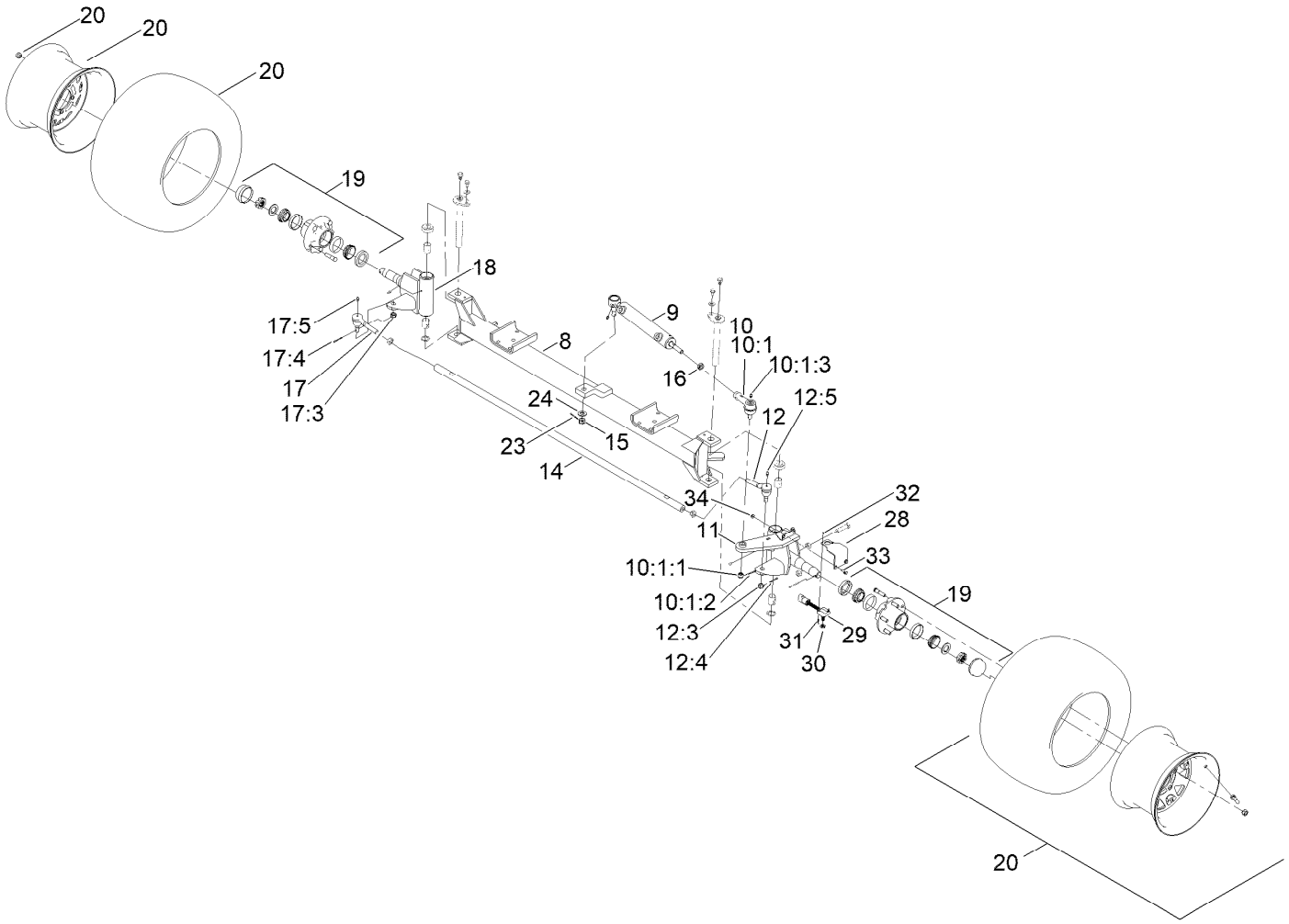

Front Axle Assembly

Ref.	Part Number	Qty.	Description
8	138-9615-03	1	Axle-Front
9	138-6102	1	Cylinder ASM
10	93-6509-03	1	Tie Rod End ASM
10:1		1	End-Tie Rod ■
10:1:1	137-4176	1	Nut-Hex, Slotted
10:1:2	3272-12	1	Pin-Cotter
10:1:3	302-5	1	Fitting-Grease
11	138-6244-03	1	Spindle-LH
12	87-1470-03	1	End-Tie Rod, LH
12:3	32136-3	1	Nut-SHH
12:4	3272-12	1	Pin-Cotter
12:5	302-5	1	Fitting-Grease
12:6	107-1587	1	Seal
14	93-6588-03	1	Rod-Steering
15	32136-13	1	Nut-SHH
16	3220-11	1	Nut-Jam
17	87-1480-03	1	End-Tie Rod, RH

Ref.	Part Number	Qty.	Description
17:3	32136-3	1	Nut-SHH
17:4	3272-12	1	Pin-Cotter
17:5	302-5	1	Fitting-Grease
17:6	107-1587	1	Seal ●
18	117-5897-03	1	Spindle-RH
19	119-6003	2	Hub ASM
20	127-1100	2	Wheel And Tire ASM
23	3272-12	2	Pin-Cotter
24	119-1868	1	Washer
28	138-6178-03	1	Bracket-Sensor
29	138-6252	1	Sensor-Rotary
30	112-8617	1	Nut-Hex
31	140-8959	2	Screw-Fht
32	3296-52	2	Nut-Lock, NI
33	3234-4	2	Screw-HHF
34	119-6921	2	Nut-Hex, Flange
99	138-6179	1	Tool-Alignment ●

● Not illustrated

■ Not serviced separately

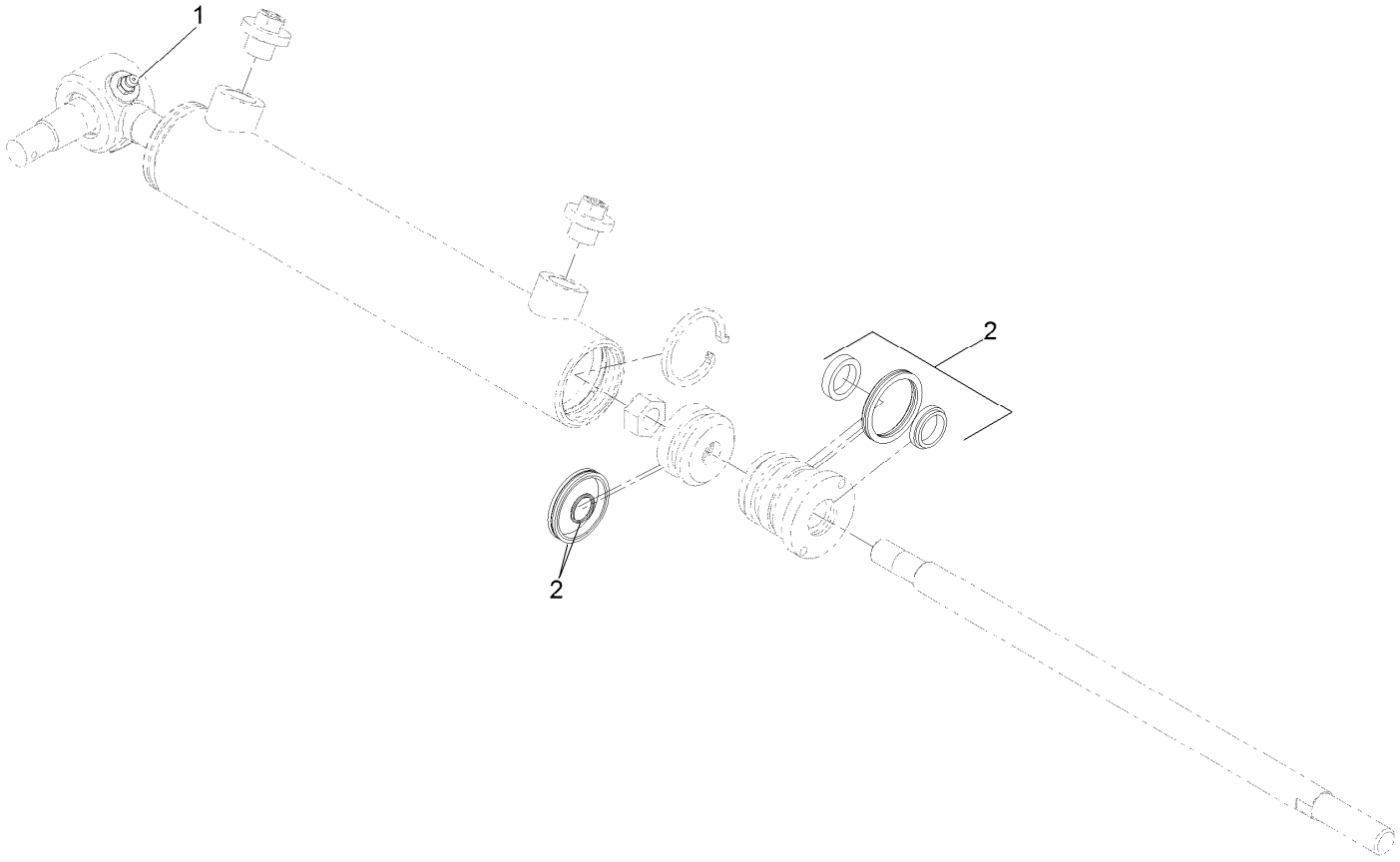

Cylinder Assembly No. 138-6102

Ref.	*Part Number*	*Qty.*	*Description*
1	302-5	1	Fitting-Grease
2	139-3099	1	Repair Kit, Cylinder

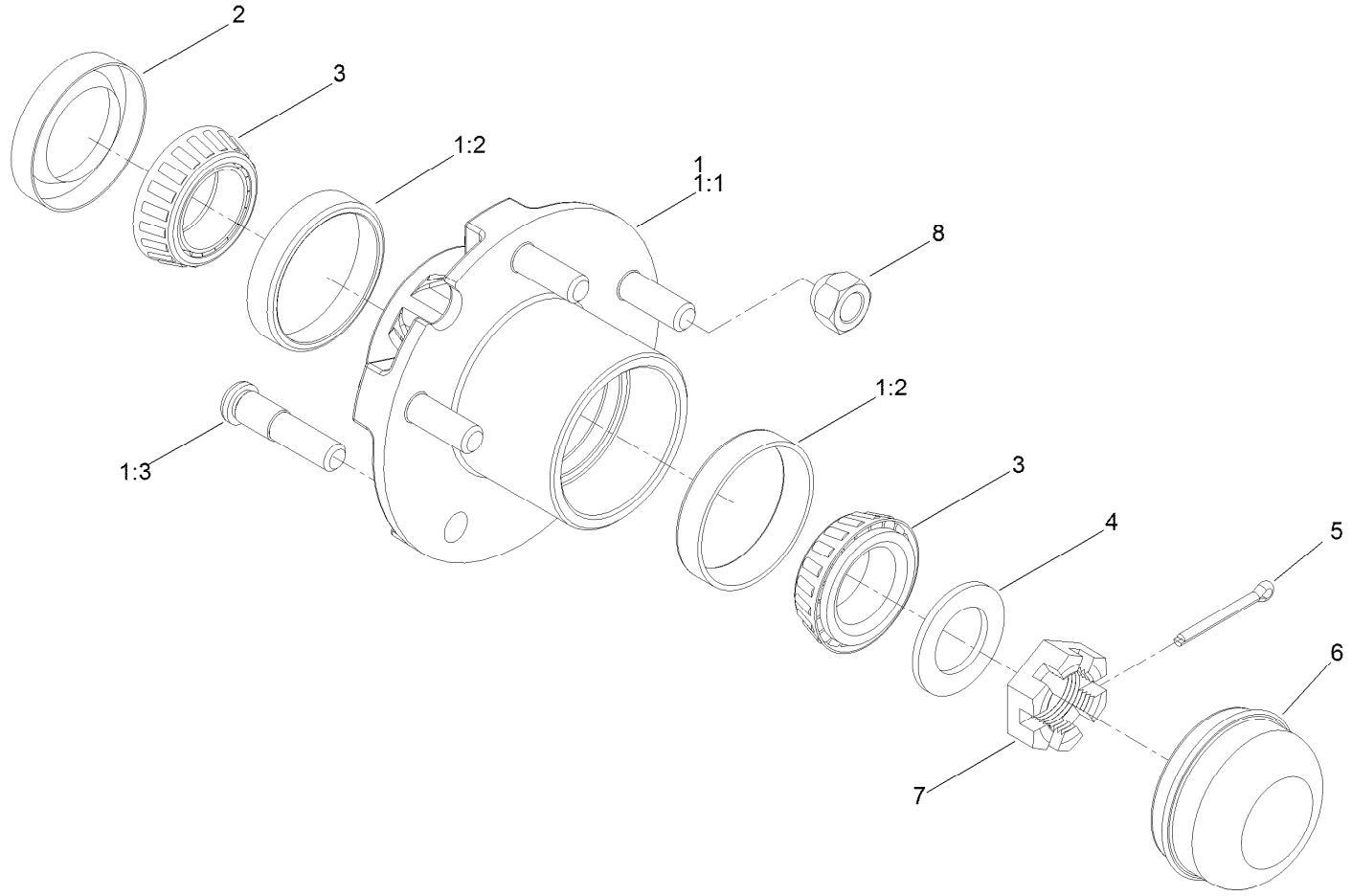

Hub Assembly No. 119-6003

Ref.	*Part Number*	*Qty.*	*Description*
1	119-6001	1	Hub ASM
1:1		1	Hub ●
1:2	115-9471	2	Bearing-Cup
1:3	69-2990	5	Stud-Wheel
2	94-7285	1	Seal
3	254-62	2	Bearing-Roller, Cone
4	HDW01814	1	Washer,Flat,1.06X1.75X.12,YZN
5	3272-18	1	Pin-Cotter
6	119-6004	1	Cap-Dust
7	119-6005	1	Nut-Slotted, Hex
8	242-35	5	Nut-Wheel

● Not serviced separately

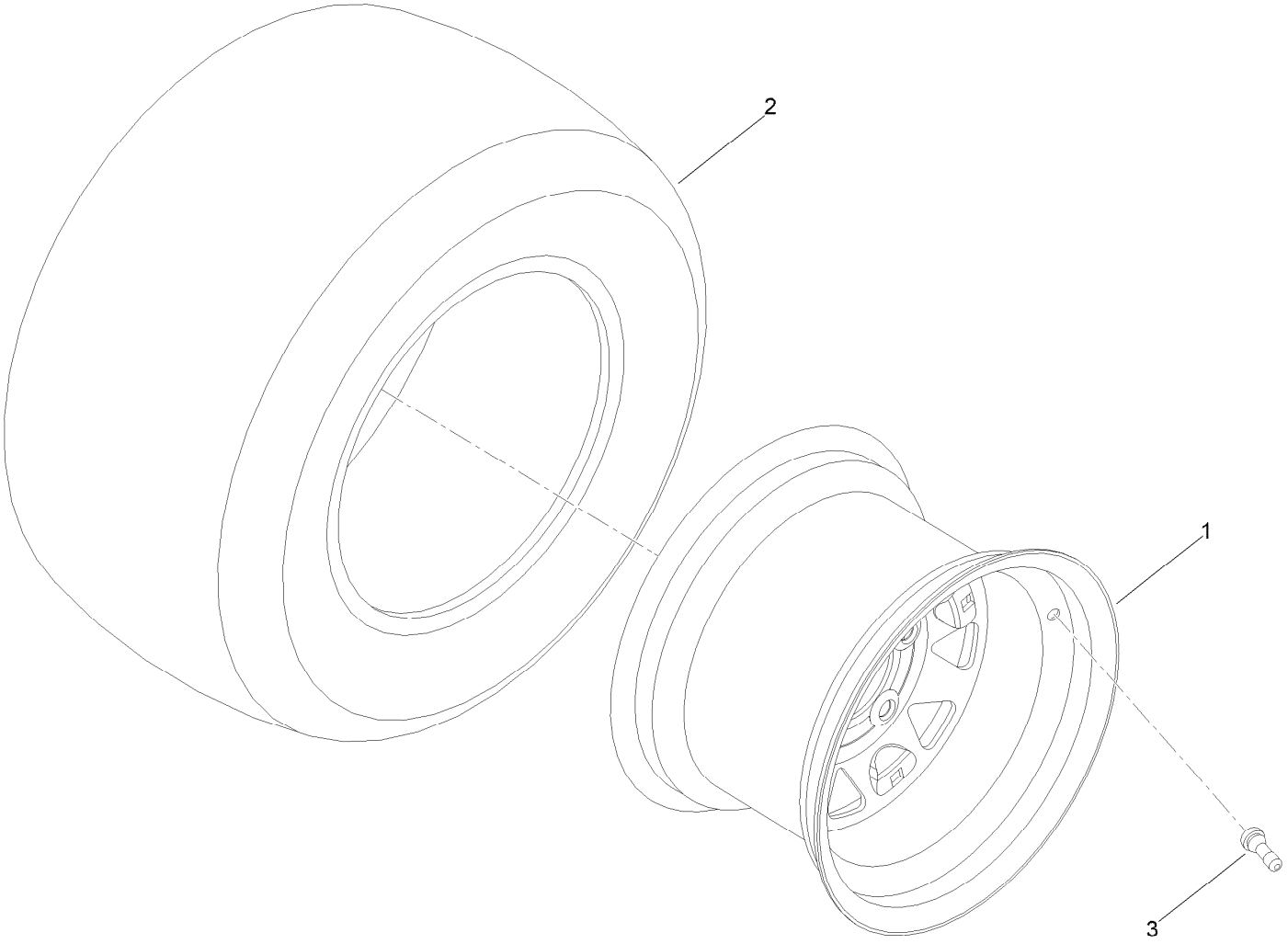

Wheel and Tire Assembly No. 127-1100

Ref.	*Part Number*	*Qty.*	*Description*
1	125-5899	1	Wheel
2	120-2114	1	Tire-Smooth
3	232-27	1	Stem-Valve

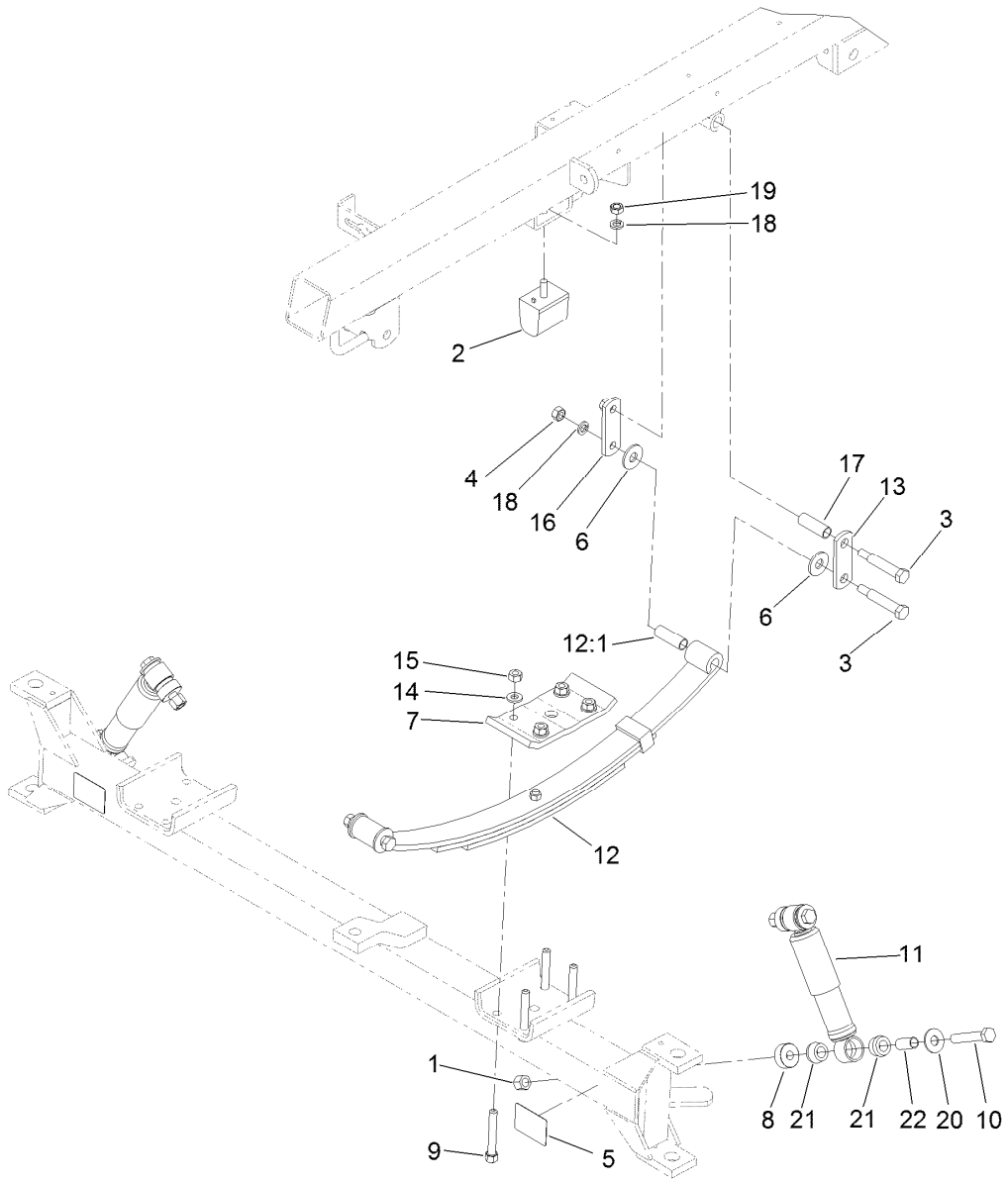

Front Suspension Assembly

Ref.	Part Number	Qty.	Description
1	3296-23	4	Nut-Lock, NI
2	87-3470	2	Bumper
3	110-5072	6	Bolt-Shoulder
4	3217-8	6	Nut-Hex
5	107-8667	2	Decal-Jacking
6	93-6161	8	Washer
7	121-5089-03	2	Plate-Top, Spring
8	127-2913	4	Spacer
9	26-0672	8	Bolt-Blade
10	325-12	4	Screw-HH
11	121-9774	2	Absorber-Shock
12	99-0569	2	Spring Leaf

Ref.	Part Number	Qty.	Description
12:1	119-9437	2	Bushing-Spring, Leaf
13	42574	2	Shackel-Outside
14	87-7480	8	Washer
15	106-0327	8	Nut-Hex
16	42576	2	Shackel-Inside
17	42592	2	Bushing-Shackle
18	3253-6	8	Washer-Lock
19	93-6166	2	Nut-Hex
20	3256-6	4	Washer-Flat
21	87-3920	8	Bushing
22	127-2925	4	Sleeve

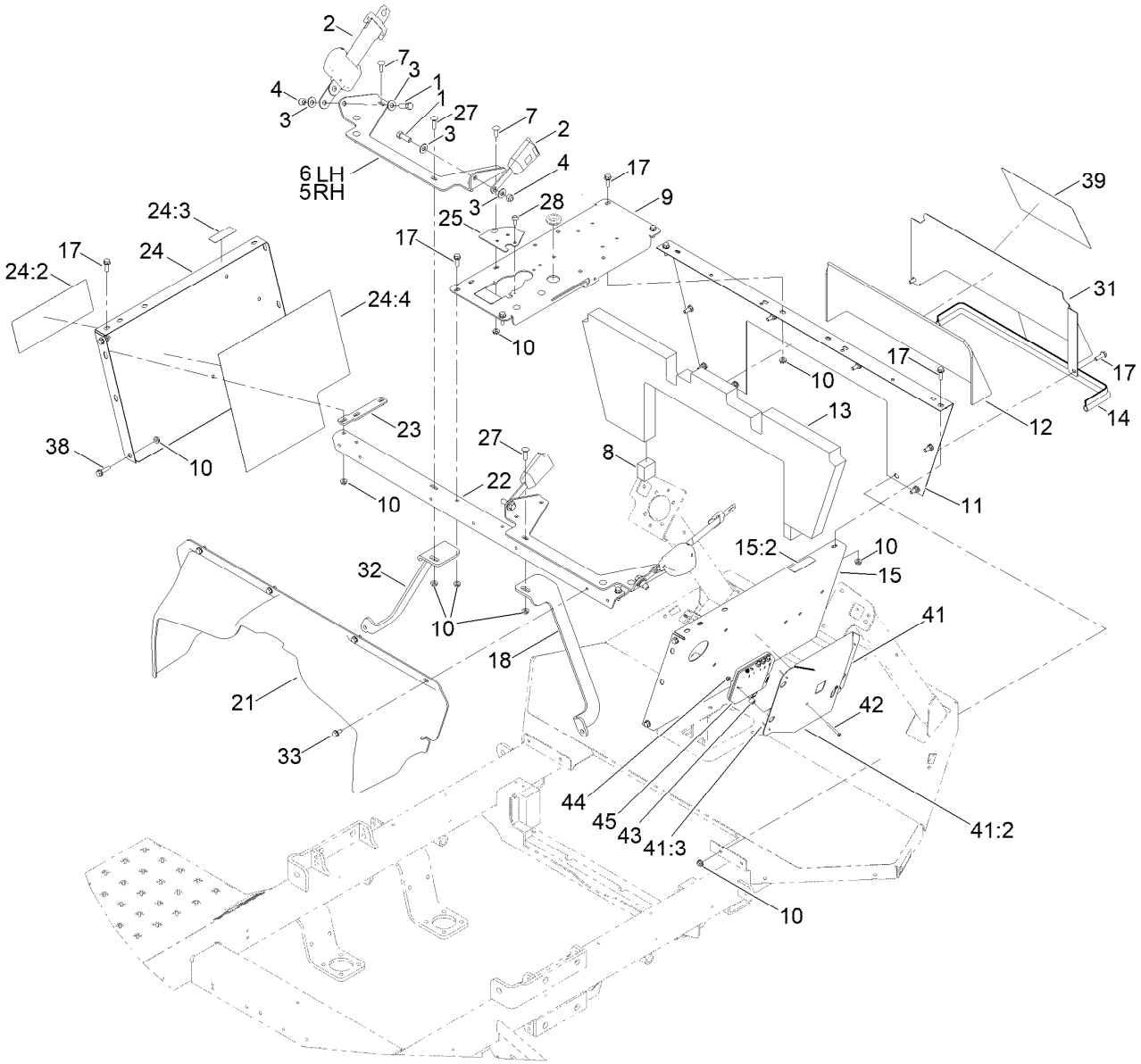

Seat Base Assembly

Ref.	Part Number	Qty.	Description
1	324-5	4	Screw-HH
2	110-0413	2	Seatbelt-Retractable
3	3256-4	8	Washer-Flat
4	3296-48	4	Nut-Hex
5	121-5071-03	1	Bracket-Seat Belt, RH
6	121-5072-03	1	Bracket-Seat Belt, LH
7	3230-22	10	Screw-CARR
8	144-6168	2	Strip-Foam, Noise Barrier
9	163-2922-03	1	Base-Console
10	32128-20	34	Nut-HF
11	130-7107-01	1	Panel-Front, Seatbase
12	130-7132	1	Barrier-Noise, Access Panel
13	144-6240	1	Barrier - Noise, Front Panel
14	131-3282	1	Trim
15	130-7104	1	Panel-Seatbase, RH
15:2	120-0625	1	Decal-Warning
17	3234-17	20	Screw-HHF
18	107-8729-0P	1	Support-RH
21	132-7660	1	Cover-Engine
22	119-5025-0P	1	Angle-Seat Box
23	95-2264	2	Strap

Ref.	Part Number	Qty.	Description
24	131-5788	1	LH Seat Box Panel ASM
24:2	120-0619	1	Decal-Warning
24:3	120-0625	1	Decal-Warning
24:4	131-5806	1	Shield-Heat Tape, Seatbase (LH)
25	132-7705-03	1	Retainer-Harness, Base
27	3230-3	2	Screw-CARR
28	119-4012	2	Screw-HWHTF
31	130-7119-01	1	Panel-Access, Seatbase
32	107-8730-0P	1	Support-LH
33	32144-70	4	Screw-HWHTF
38	3234-36	2	Screw-HHF
39	139-3065	1	Decal-Service
41	140-7381	1	Modem-Mount ASM
41:2	140-7369	4	Magnet
41:3	3290-55	4	Rivet-Pop
42	3290-424	2	Screw-SHH
43	138-9250	2	Spacer
44	138-0719	2	Nut-HF
45	147-4687	1	Modem-CI55,Universal

Seat, Fresh Water Tank and Roll-Over Protection System Assembly

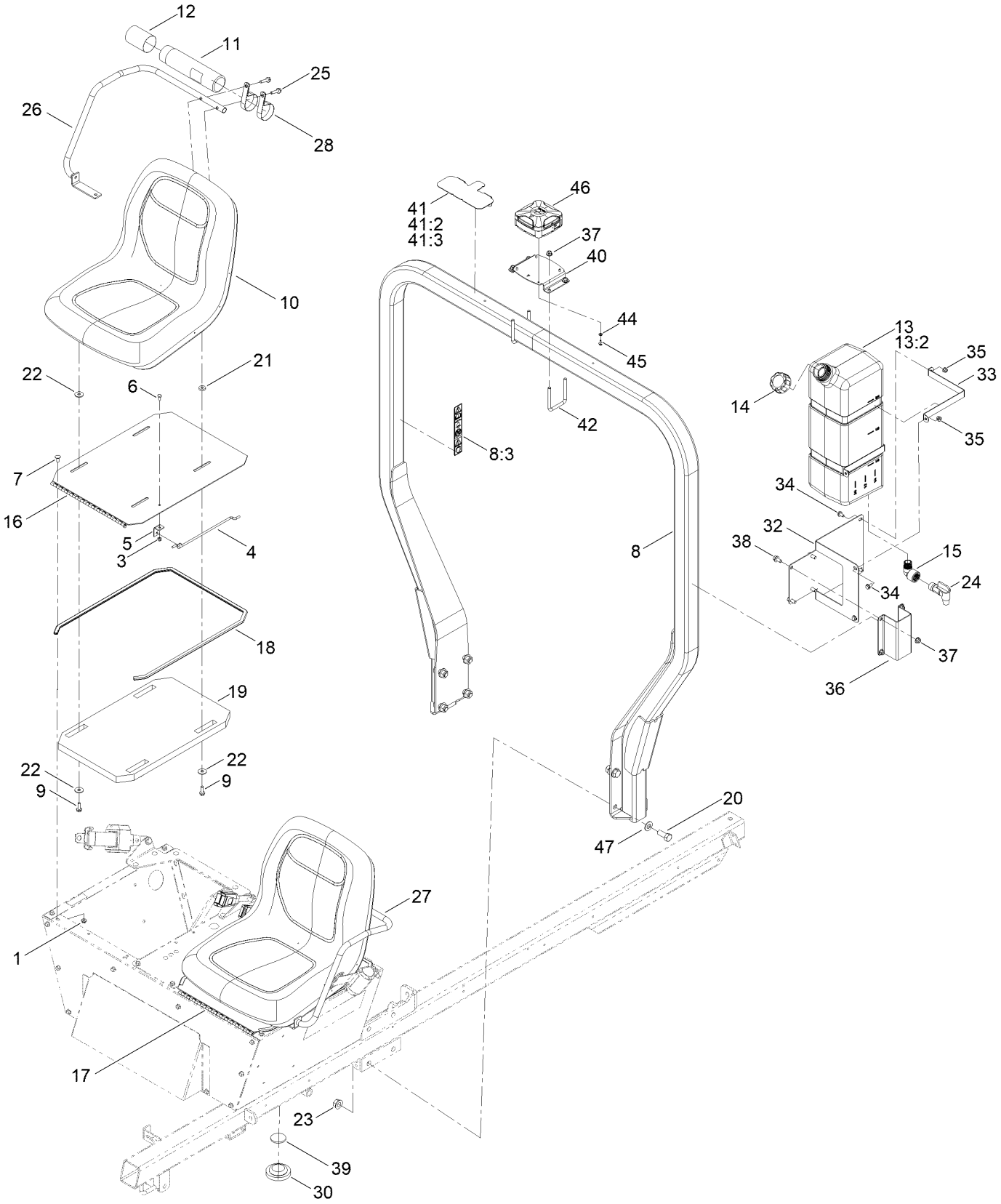

Seat, Fresh Water Tank and Roll-Over Protection System Assembly (continued)

Ref.	Part Number	Qty.	Description
1	32128-20	4	Nut-HF
3	3296-42	2	Nut-Lock, NI
4	94-7204	2	Rod-Prop, Seat
5	94-7203	2	Bracket
6	321-3	2	Screw-HH
7	137-3061	4	Bolt-CARR
8	119-0589	1	ROPS ASM
8:3	117-4955	1	Decal-Danger, ROPS (CE)
9	33104-025	8	Screw-HHF
10	112-2923	2	Seat ASM
11	104-7050	1	Tube-Manual
12	104-7048	1	Cap-Housing
13	132-7745	1	Fresh Water Tank ASM
13:2	120-0616	3	Decal-Water, Fresh
14	106-5052	1	Cap-Water, Fresh
15	132-7706	1	Elbow-90 DEG
16	108-3289-03	1	Panel-Seat, RH
17	132-7664-03	1	Panel-Seat, LH
18	94-7085	2	Trim
19	108-3290	1	Barrier-Noise, Seat
20	327-4	8	Screw-HH
21	7-0081	6	Washer-Flat
22	52-2861	10	Washer
23	32128-50	8	Nut-Flange
24	100-7011	1	Spigot-90 DEG
25	33104-035	4	Screw-HHF
26	140-6360	1	Armrest-RH
27	140-6359	1	Armrest LH
28	2412-133	2	Clamp-R
29	132-7666	1	Barrier-Noise, Seat ●
30	100-3524	1	Switch-Seat
32	132-5619-03	1	Mount-Tank, Eye Wash
33	132-7628-03	2	Band-Tank, Eye Wash
34	3234-7	4	Screw-HHF
35	119-4041	4	Nut-HF
36	132-7627-03	1	Clamp-Bracket, Fresh Water Tank
37	119-4042	8	Nut-HF, NI
38	3234-1	4	Screw-HHF
39	133-2797	1	Disc-Plunger
40	144-6009-03	1	Bracket-Mount, Agi2
41	147-3178	1	Antenna Mount, ASM
41:2	140-7369	2	Magnet
41:3	3290-55	2	Rivet-Pop
42	47-3460	2	U-Bolt
44	43-5930	4	Washer-Lock, Spring
45	120-4579	4	Screw-HHF
46	140-7378	1	Kit, Ags-2 Reciver +rtk Oaf
47	3256-27	8	Washer-Flat

● Not illustrated

Control Console Assembly

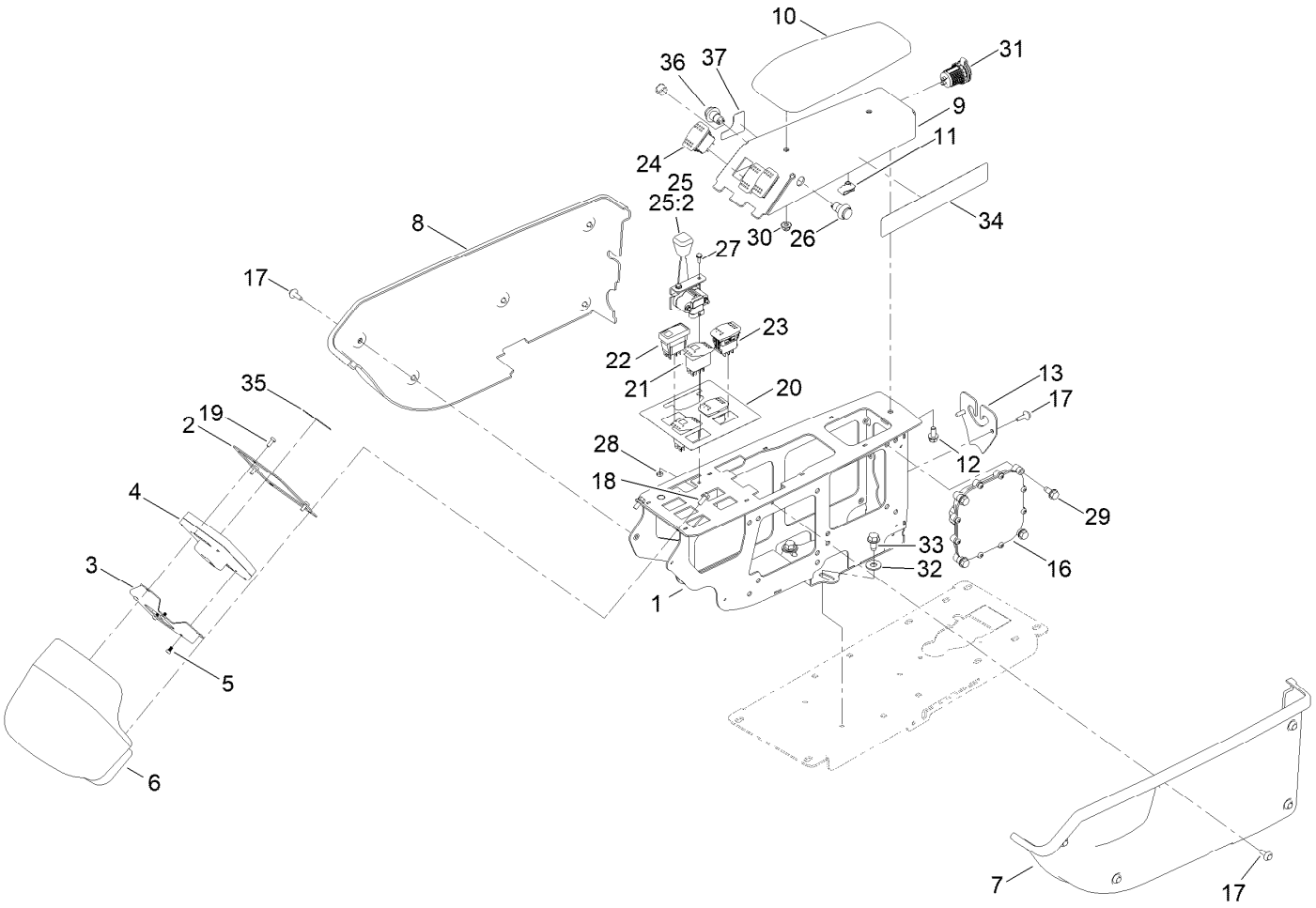

Control Console Assembly (continued)

Ref.	Part Number	Qty.	Description
1	132-5640-03	1	Frame-Console
2	163-7140-03	1	Plate - Display
3	164-1074-0P	1	Retainer-Monitor
4	161-1701	1	Display-LCD
5	132-7668	4	Screw-PPH
6	132-7617	1	Hood-Console
7	132-7611	1	Cover-LH
8	132-7612	1	Cover-RH
9	163-7050-03	1	Panel-Arm
10	131-9637	1	Armrest-Quick Find
11	112-3306	1	Nut
12	3234-14	1	Screw-HHF
13	132-7704-03	1	Retainer-Harness, Console
16	122-3375	1	Controller-Tec
17	119-4012	12	Screw-HWHTF
18	32144-85	2	Screw-HWH Thd Form
19	3250-12	3	Screw-PPH
20	132-7695	1	Decal-Console
21	100-8490	2	Switch-Rocker, On-None-On
22	104-9007	1	Switch-Rocker
23	100-1535	2	Switch-Rocker, (On)-Off-(On)
24	95-8999	3	Switch-Rocker, On-None-On
25	122-0111	1	Throttle-Electronic
25:2	66-0120	1	Knob
26	125-7996	1	Switch-Pb, Momentary
27	3290-321	2	Screw-HWH
28	3296-2	2	Nut-Lock, NI
29	32144-70	4	Screw-HWHTF
30	119-4041	2	Nut-HF
31	131-8388	1	Socket-USB
32	3256-4	3	Washer-Flat
33	110-9380	3	Screw-HWH
34	132-7786	1	Decal-Quickfind
35	114-5554	1	Decal-Center, Info
36	125-7996	1	Switch-Pb, Momentary
37	138-6278	1	Decal-Engage Autoguide

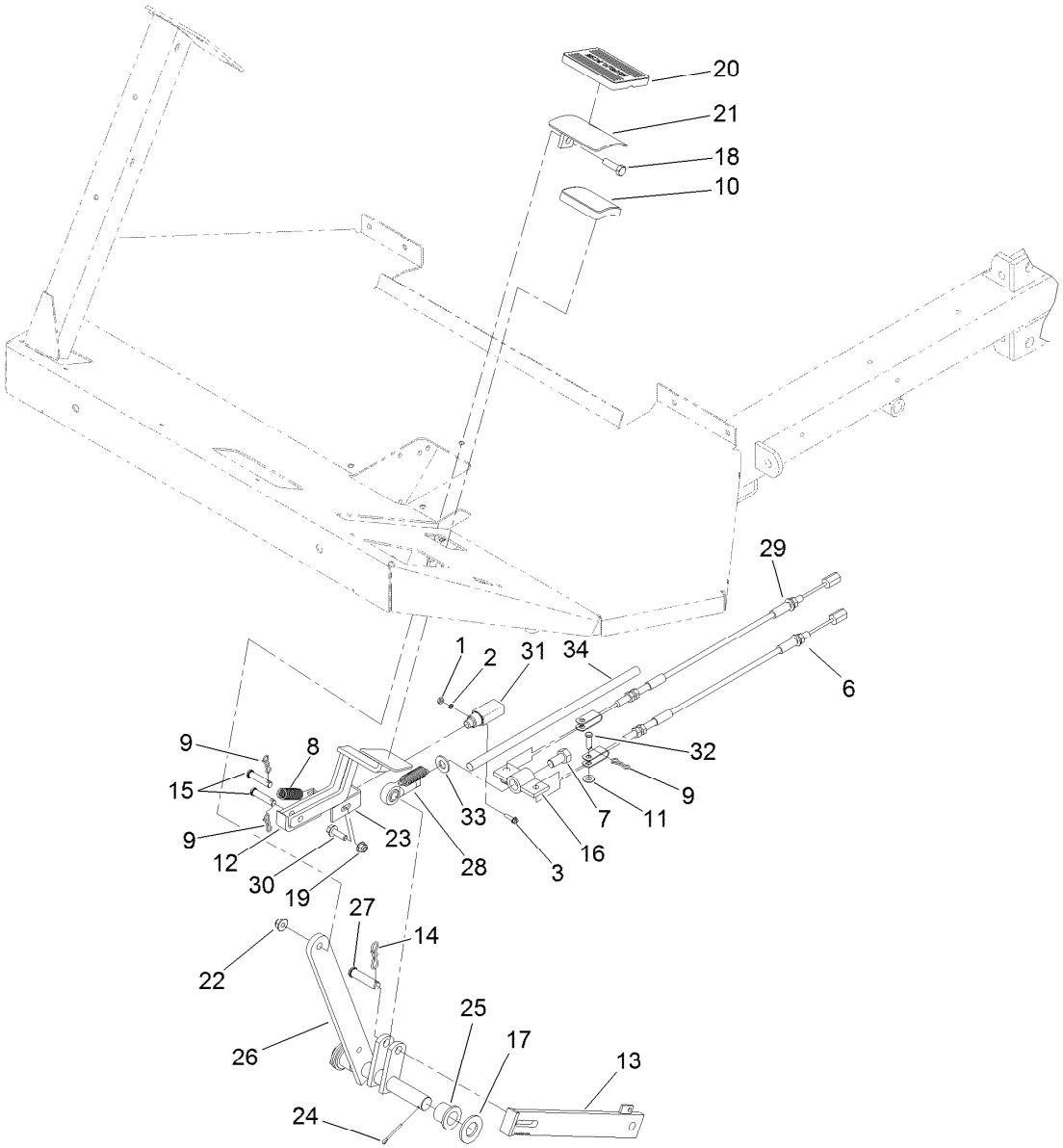

Brake Pedal Assembly

Ref.	Part Number	Qty.	Description
1	3217-26	2	Nut-Hex
2	3253-17	2	Washer-Lock
3	32105-13	2	Screw-HWH
6	119-9364	1	Cable-Brake, LH
7	3213-1	1	Screw-HH
8	92-0417	2	Spring-EXT
9	119-1415	4	Pin-Cotter, Locking
10	42719	1	Pad-Pedal
11	3256-23	2	Washer-Plain
12	93-6599-03	1	Catch
13	93-6598-0P	1	Strap-Brake, Emergency
14	119-1416	1	Pin-Cotter, Locking
15	283-15	2	Pin-Clevis
16	93-6595	1	Equalizer-Brake
17	3256-29	5	Washer-Flat
18	323-7	1	Screw-HH

Ref.	Part Number	Qty.	Description
19	119-4041	1	Nut-HF
20	7-3900	1	Pad-Brake
21	100-8422-0P	1	Bracket-Pedal, Welded
22	119-4042	1	Nut-HF, NI
23	93-6592	1	Bracket
24	3272-12	2	Pin-Cotter
25	94-7164	2	Bearing
26	93-6589	1	Shaft-Brake
27	42195	1	Pin-Clevis
28	522087	1	Rod-End
29	119-9365	1	Cable-Brake, RH
30	3234-17	1	Screw-HHF
31	99-7407	1	Switch
32	283-58	2	Pin-Clevis
33	3256-26	1	Washer-Flat
34	130-7176	1	Sleeve-Thermal, Wrap

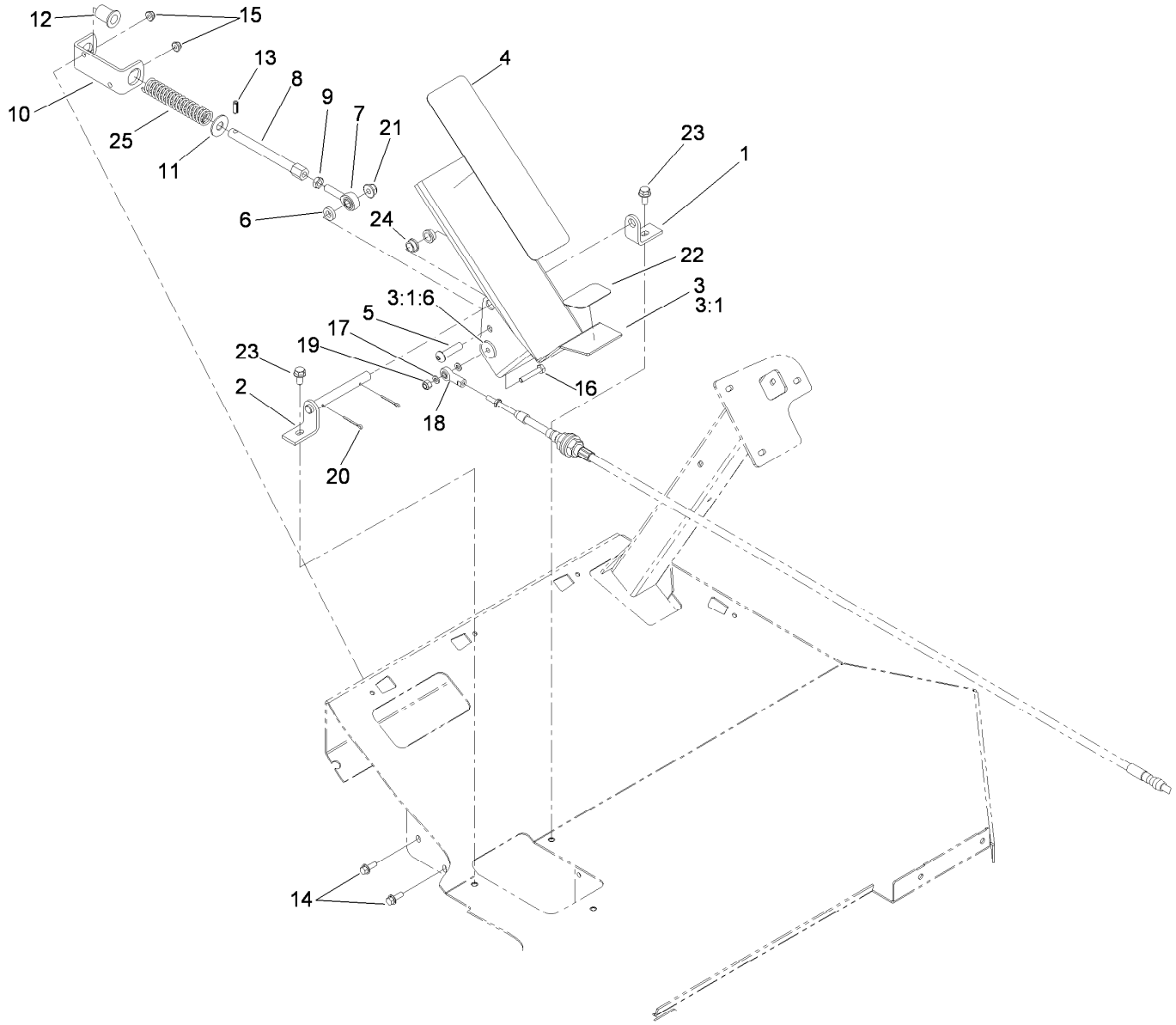

Traction Pedal Assembly

Ref.	Part Number	Qty.	Description
1	92-0450	1	Bracket Pin
2	92-0448	1	Pin-Pivot
3	106-5247-03	1	Traction Pedal ASM
3:1		1	Pedal-Traction ●
3:1:6	106-5248	1	Spacer
4	71-0440	1	Abrasive-Pedal
5	95-3857	1	Screw-HSBH
6	80-7730	1	Spacer
7	2411-36	1	Bearing-End, Rod
8	92-7609	1	Shaft-Spring
9	3220-3	1	Nut-HJ
10	92-7608-03	1	Bracket-Spring
11	3256-5	1	Washer-Flat
12	92-7610	1	Retainer-Spring

Ref.	Part Number	Qty.	Description
13	32121-11	1	Pin-Roll
14	3234-4	2	Screw-HHF
15	104-7201	2	Nut-HF, NI
16	321-9	1	Screw-HH
17	33093-00	2	Washer-Flat
18	2411-41	1	Rod End-Ball Joint
19	3296-42	1	Nut-Lock, NI
20	3272-7	2	Pin-Cotter
21	119-4042	1	Nut-HF, NI
22	71-0450	1	Abrasive-Pedal, Rear
23	3234-14	2	Screw-HHF
24	256-156	2	Bushing-Flange
25	84-9100	1	Spring

● Not serviced separately

Throttle Assembly

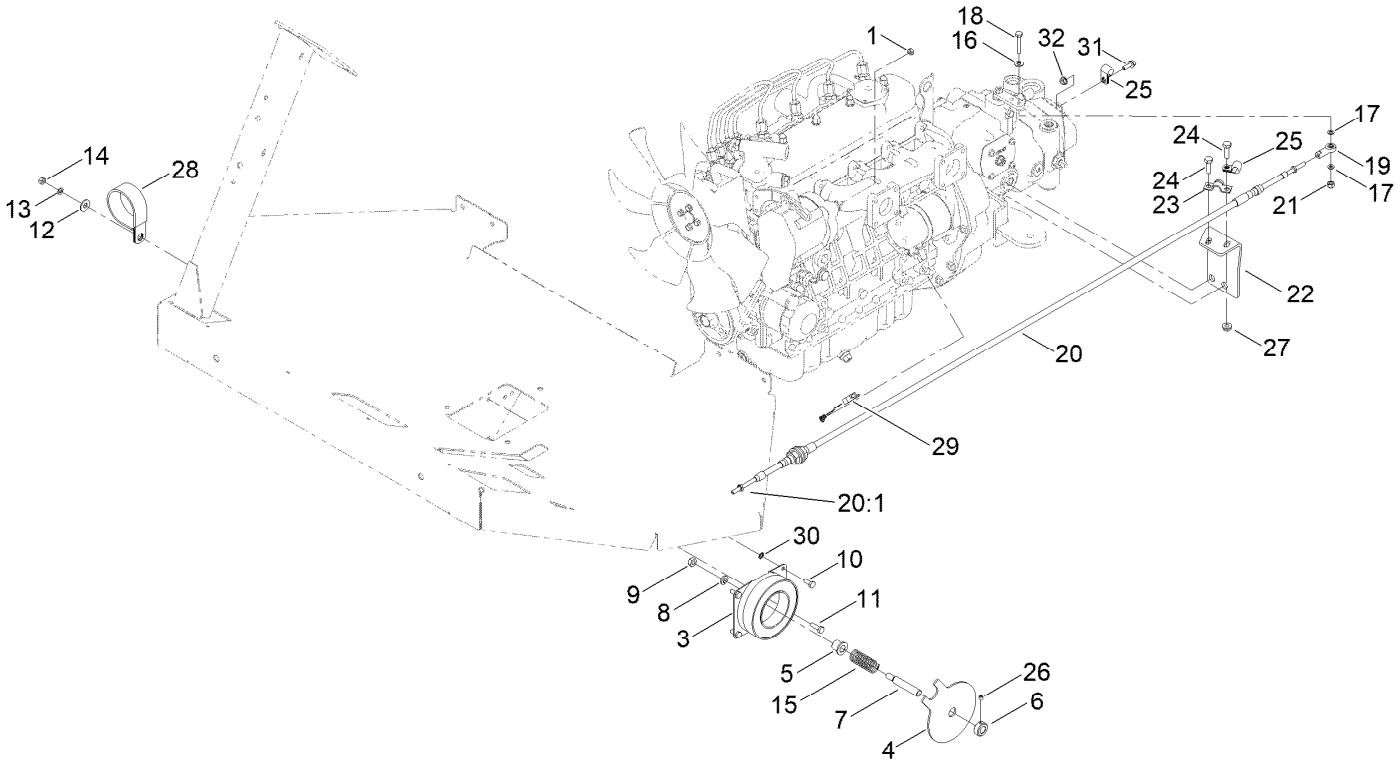

Throttle Assembly (continued)

Ref.	Part Number	Qty.	Description
1	33013-00	1	Nut-Hex
3	42-1720	1	Core-Field, Coil
4	144-6182	1	Plate-Clutch
5	256-273	1	Bushing-Flange
6	43-6320	1	Collar
7	69-9170	1	Shaft-Cruise
8	3253-5	1	Washer-Lock
9	3217-7	1	Nut-Hex
10	321-3	2	Screw-HH
11	321-5	2	Screw-HH
12	3256-3	2	Washer-Flat
13	3253-3	4	Washer-Lock
14	3217-5	4	Nut-Hex
15	43-6200	1	Spring-Compression
16	3256-22	1	Washer-Flat
17	33093-00	2	Washer-Flat
18	321-9	1	Screw-HH
19	2411-41	1	Rod End-Ball Joint
20	106-5233	1	Cable-Traction
20:1	3220-1	2	Nut-Jam
21	3296-42	1	Nut-Lock, NI
22	119-9359	1	Bracket-Cable, Rear
23	93-2092	1	Clamp-Cable
24	322-5	2	Screw-HH
25	2412-93	2	Clamp-R
26	3245-32	1	Screw-HSH
27	32128-20	2	Nut-HF
28	2412-102	2	Clamp-R
29	108-9455	1	Harness-Wire, Fusible Link
30	3255-7	4	Washer-Lock/EXT
31	3234-4	1	Screw-HHF
32	32128-33	1	Nut-HF

Dash Panel Assembly

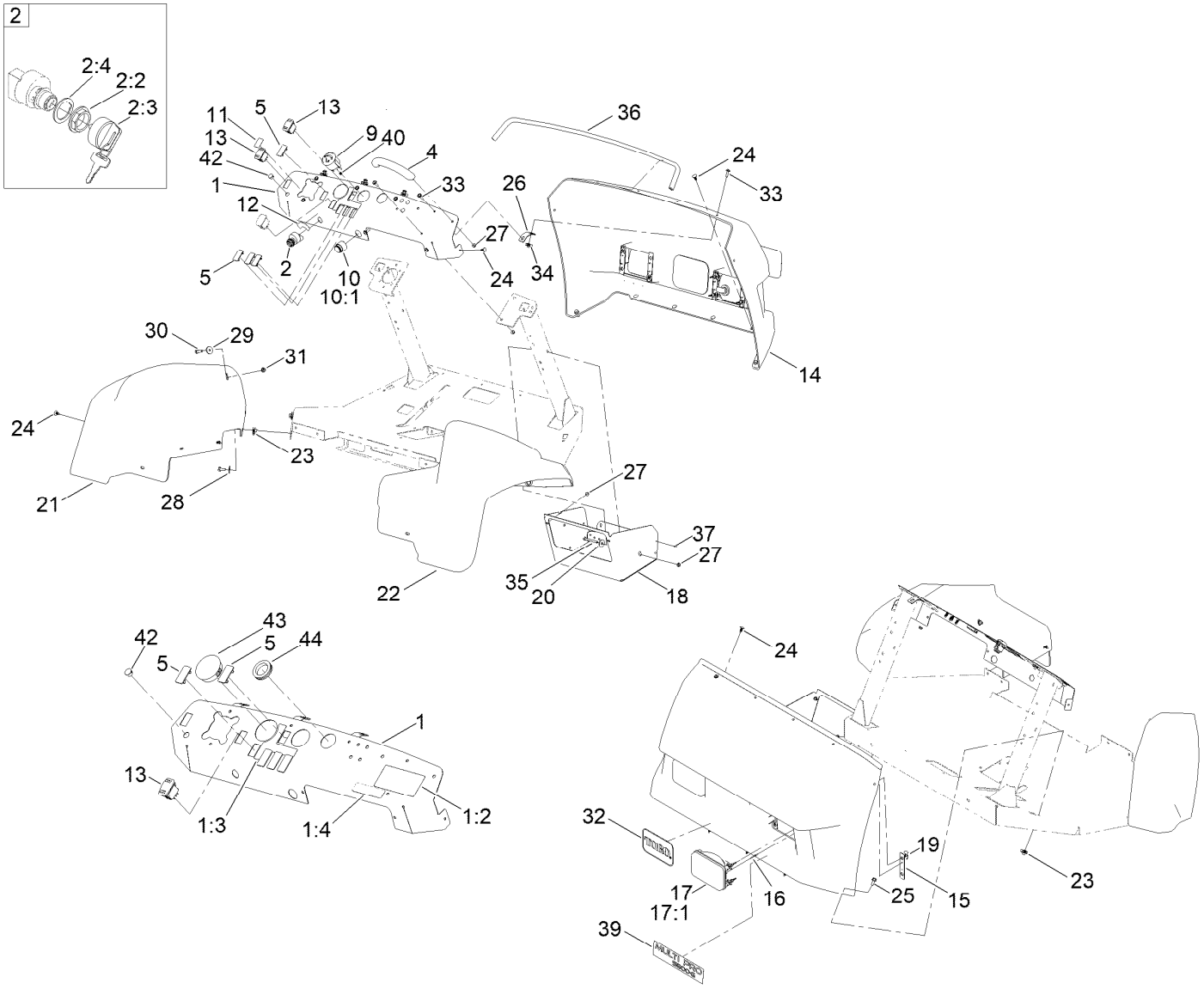

Dash Panel Assembly (continued)

Ref.	Part Number	Qty.	Description
1	163-2925	1	Dash Panel ASM
1:2	120-0624	1	Decal-Warning, Passenger
1:3	132-7689	1	Decal-Switch
1:4	133-8062	1	Decal-Spark Arrestor
2	106-5269	1	Ignition Switch ASM
2:2	108-8660	1	Nut-Mounting
2:3	106-5270	1	Ignition Key Set
2:4	108-8659	1	Washer-Backup
4	117-4948	1	Handle-Grab
5	99-7420	5	Plug-Hole
9	132-7614	1	Gauge-Fuel
10	80-9330	1	Audio Alarm ASM
10:1	104-5107	1	Nut-Plastic, Knurled
11	132-7708	1	Decal-Lights, Horn
12	132-7783	1	Decal-Ignition Switch, Gas
13	95-8999	2	Switch-Rocker, On-None-On
14	117-0793	1	Hood
15	117-5832	4	Bracket-Headlight
16	3290-274	8	Rivet-Pop
17	132-6703	2	Headlight ASM
17:1	115-2395	1	Bulb-Light
18	136-0426-03	1	Compartment-Storage
19	115-2408	6	Clip-Speed
20	52-2860	2	Washer
21	119-0417	1	Fender
22	119-0418	1	Fender
23	94-2413	6	Nut-U
24	117-2382	10	Plug-Plastic
25	3234-47	6	Screw-HHF
26	163-2927	3	Bracket-Hood
27	104-7201	7	Nut-HF, NI
28	3256-82	4	Washer-Flat
29	63-8410	2	Washer
30	322-5	2	Screw-HH
31	32128-20	2	Nut-HF
32	62-5550	1	Decal
33	110-9361	12	Screw-PPH
34	107069	8	Clip
35	321-15	1	Screw-HH
36	119-0504	1	Trim-Hood
37	3290-271	3	Rivet-Pop
39	163-2970	1	Decal
40	363-1483	3	Nut-Hex, K Lock
42	127-1843	1	Plug-Dome
43	136-9791	1	Plug-Panel
44	240-7	1	Grommet-Rubber

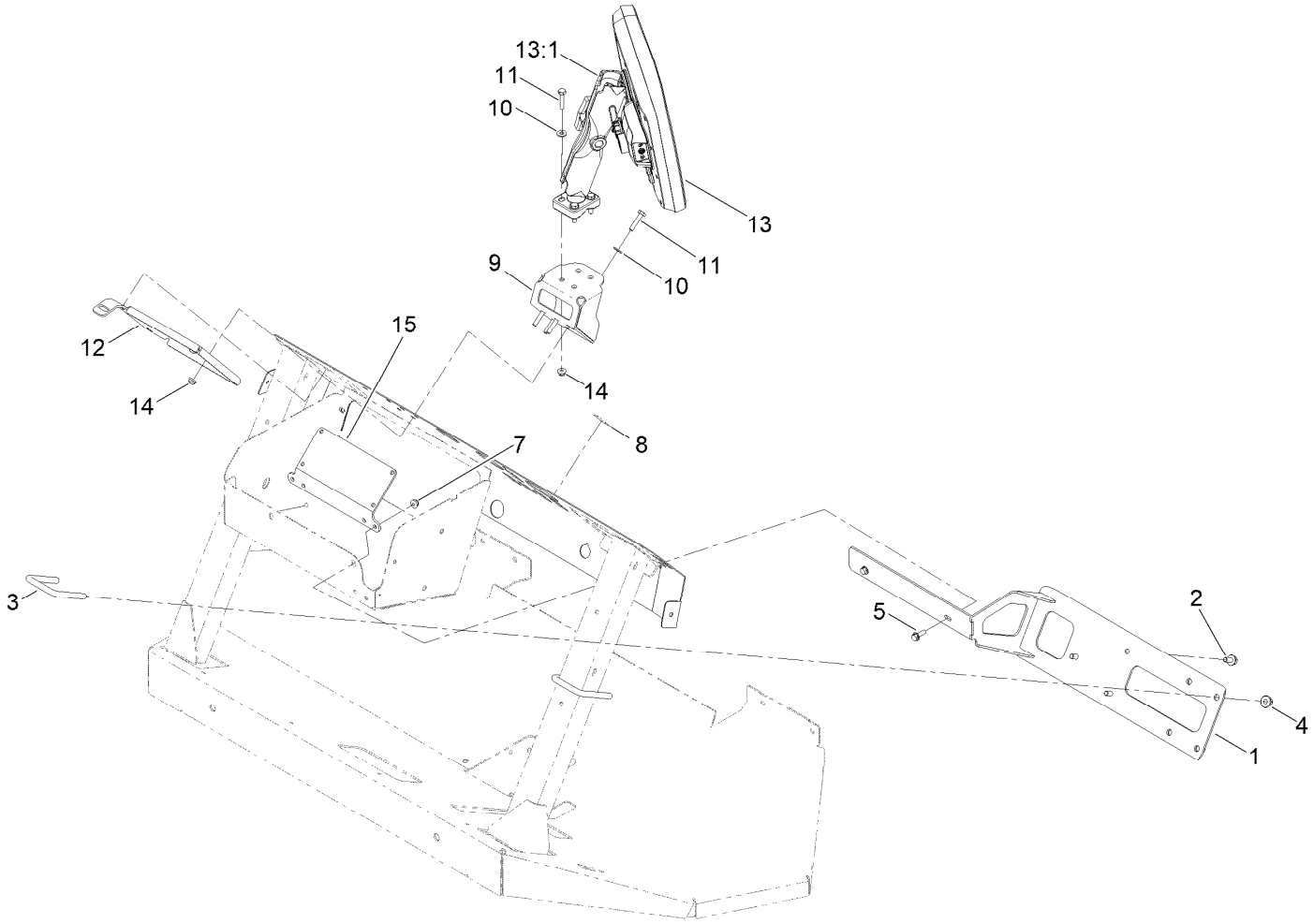

Control Console and Manifold Mount Assembly

Ref.	*Part Number*	*Qty.*	*Description*
1	138-6159-03	1	Mount-Manifold
2	33104-016	3	Screw-HHF
3	133-9682	2	Screw-Hfh
4	119-4042	2	Nut-HF, NI
5	115-5103	2	Screw-HHF
7	119-6921	2	Nut-Hex, Flange
8	161-4186	1	Decal-Transportation Switch
9	147-0617-03	1	Mount-Monitor
10	3256-22	8	Washer-Flat
11	114-0282	8	Screw-HH
12	136-0378-03	1	Bracket-Stiffener
13	147-0615	1	Control Console-Xd
13:1	133-0374	1	Arm-Mount, Console
14	104-7201	8	Nut-HF, NI
15	144-7060-0P	1	Bracket-Scp Mounting

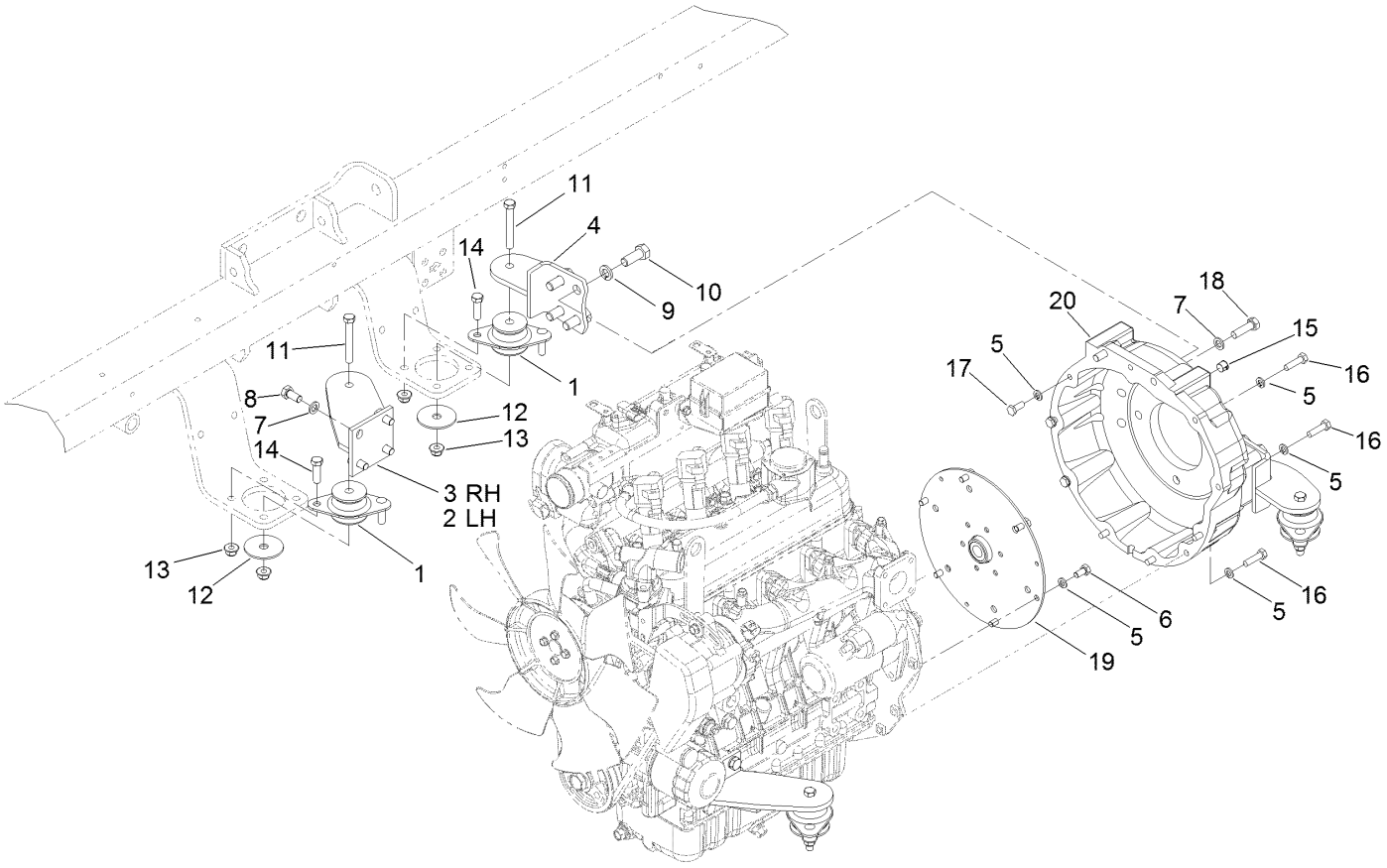

Engine Mounting and Bell Housing

Ref.	Part Number	Qty.	Description
1	131-1821	4	Mount-Engine
2	117-0667-0P	1	Bracket-LH
3	117-0666-0P	1	Bracket-RH
4	117-0669-0P	2	Bracket-Mount, Rear
5	3253-4	15	Washer-Lock
6	139-9940	6	Screw-HH,Patch
7	48-9590	10	Washer-Lock
8	63-7790	8	Screw-Cap
9	3253-7	8	Washer-Lock
10	325-5	8	Screw-HH

Ref.	Part Number	Qty.	Description
11	323-13	4	Screw-HH
12	87-5100	4	Washer-Snubbing
13	119-4042	12	Nut-HF, NI
14	323-7	8	Screw-HH
15	119-6039	2	Plug-Plastic
16	33114-030	6	Screw-HH
17	33114-020	3	Screw-HH
18	56-2140	2	Screw-HH
19	92-0285	1	Coupling ASM
20	105-0100	1	Housing-Flywheel

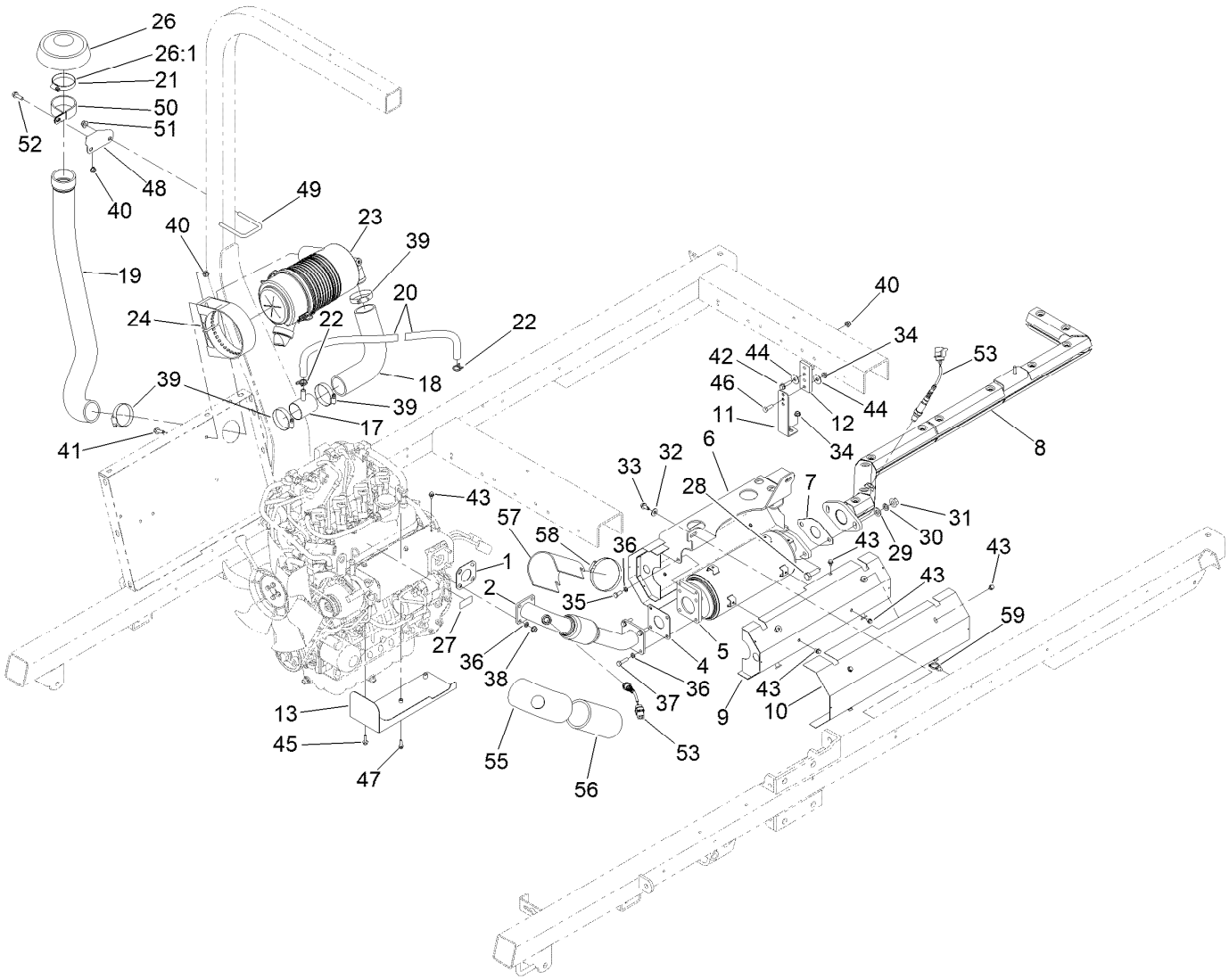

Muffler and Air Cleaner Assembly

Ref.	Part Number	Qty.	Description
1	125-9108	1	Gasket-Muffler
2	131-5773	1	Pipe-Header
4	121-5590	1	Gasket-Manifold, Outlet
5	133-2788	1	Catalyst
6	127-8935	1	Bracket-Mount, Exhaust
7	121-5591	1	Gasket-Outlet, Catalyst
8	130-7333	1	Pipe-Tail
9	130-7228	2	Shield-Muffler, Inner
10	130-7208	2	Shield-Muffler, Outer
11	120-8557	1	Bracket-Hanger
12	117-0744	1	Hanger-Muffler
13	130-7206	1	Shield-Manifold, Bottom
17	120-5552	1	Vent
18	130-7098	1	Hose-Intake
19	136-2267	1	Hose-Air Cleaner
20	138-6269	2	Hose-Overflow
21	2412-42	1	Clamp-Hose
22	117-1193	2	Clamp-Hose
23	106-5277	1	Air Cleaner ASM
24	98-4525	1	Bracket-Cleaner, Air
26	139-0686	1	Rain Cap ASM

Ref.	Part Number	Qty.	Description
26:1	2412-130	1	Clamp-Hose
27	106-5517	1	Decal-Warning
28	33116-040	2	Screw-HH
29	33096-00	2	Washer-Flat
30	48-8070	2	Washer-Lock
31	33006-00	2	Nut-HF
32	3256-3	2	Washer-Flat
33	32104-32	2	Screw-HWH
34	32128-25	2	Nut-HF
35	33114-020	4	Screw-HH
36	3253-4	12	Washer-Lock
37	33114-030	4	Screw-HH
38	33004-00	8	Nut-HF
39	2412-130	4	Clamp-Hose
40	119-4041	5	Nut-HF
41	3234-17	2	Screw-HHF
42	119-4036	1	Screw-HHF
43	81-1280	16	Screw-HHF
44	52-2860	2	Washer
45	33103-025	2	Screw-HHF
46	322-5	1	Screw-HH

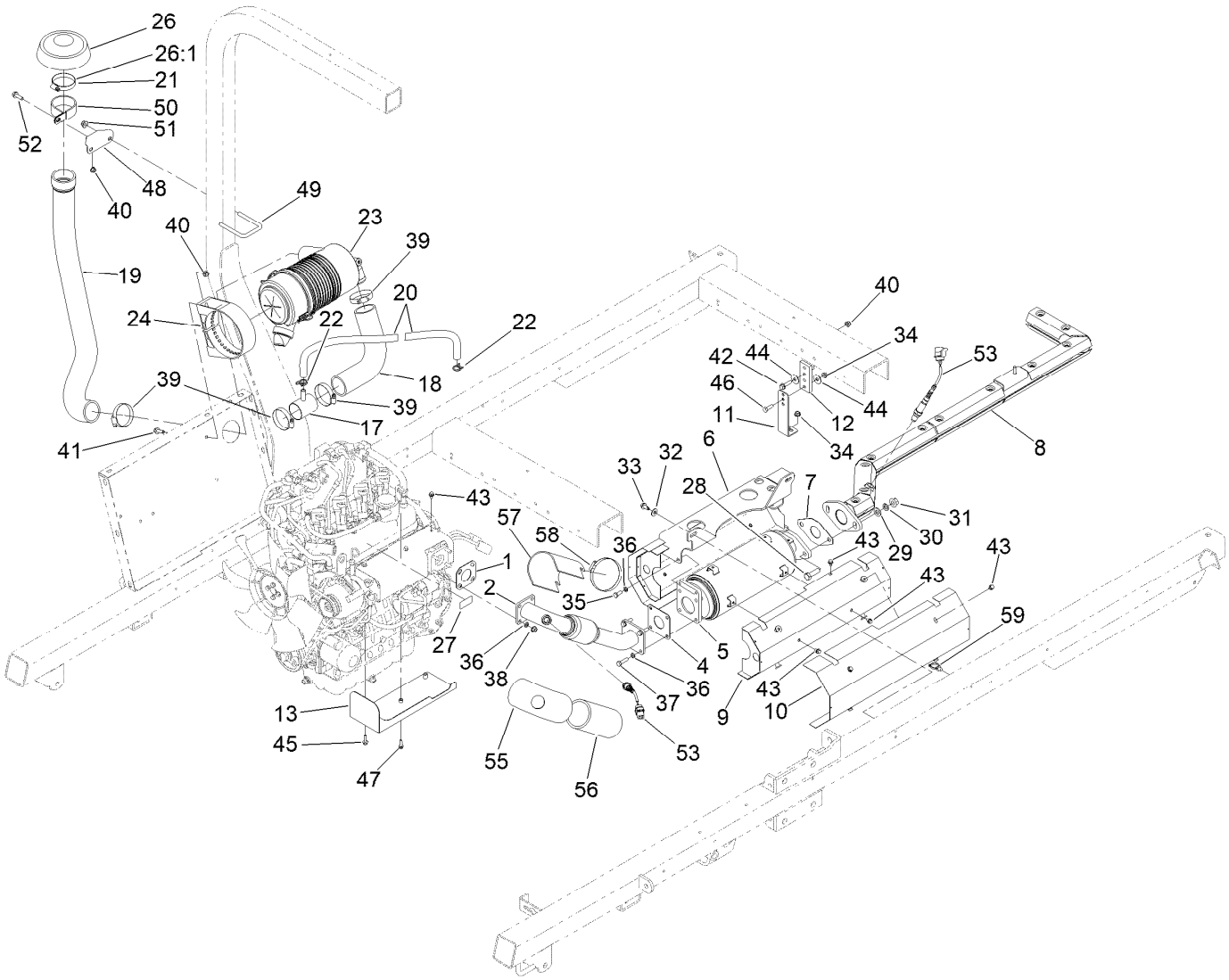

Muffler and Air Cleaner Assembly (continued)

Ref.	Part Number	Qty.	Description
47	110-3986	1	Screw
48	131-3319-03	1	Bracket-Mount, Air Intake
49	47-3460	1	U-Bolt
50	2412-102	1	Clamp-R
51	119-4042	2	Nut-HF, NI
52	3234-29	1	Screw-HHF

Ref.	Part Number	Qty.	Description
53	120-3832	2	Sensor-Oxygen
55	131-9600	1	Jacket-Upper, Header
56	131-9601	1	Jacket-Lower, Header
57	131-9598	1	Shield-Composite
58	2412-110	1	Clamp-Band/Screw
59	32180-030	4	Clip-Tie

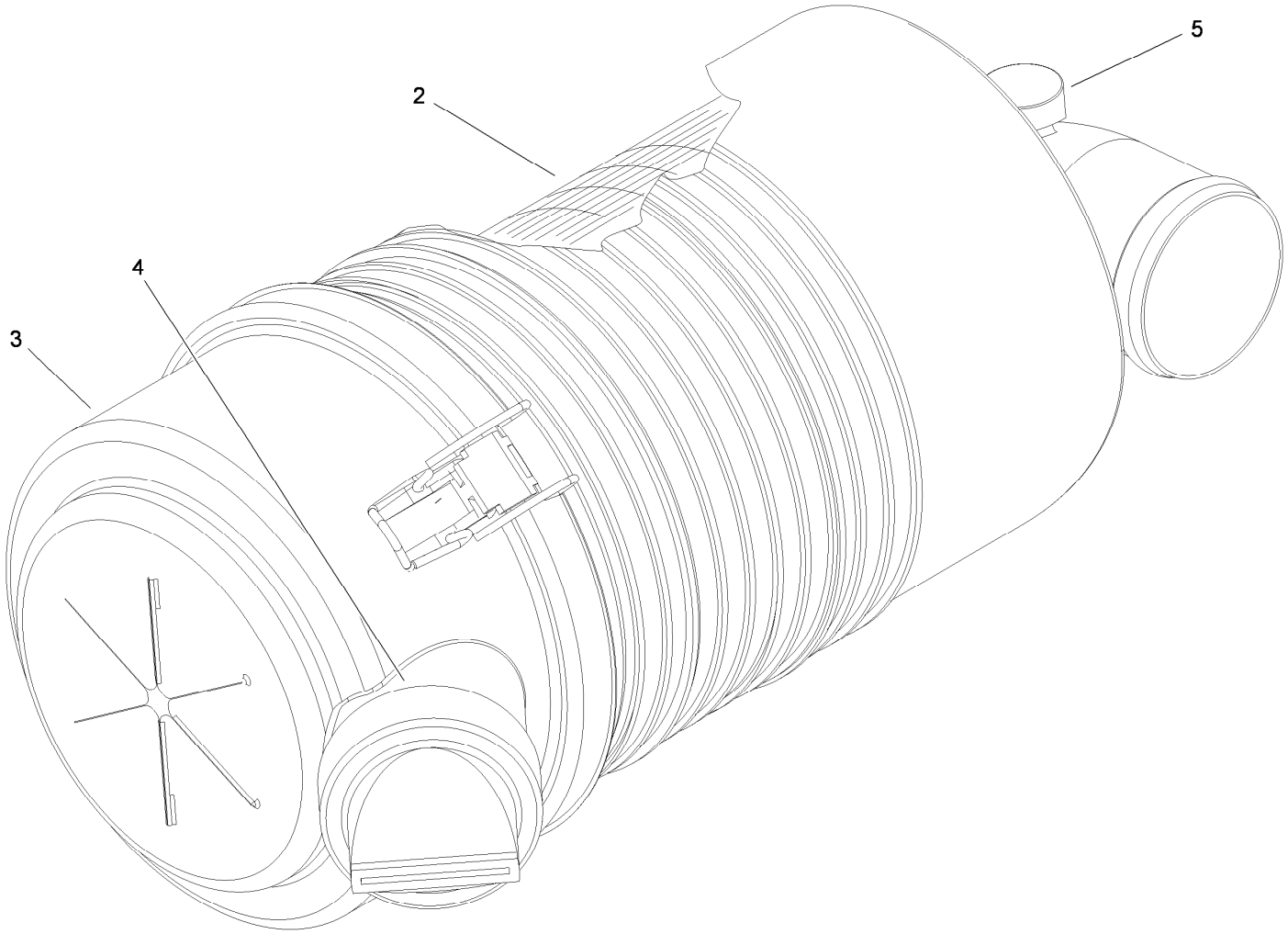

Air Cleaner Assembly No. 106-5277

Ref.	*Part Number*	*Qty.*	*Description*
2	108-3810	1	Filter-Air
3	98-9771	1	Cover ASM
4	87-9400	1	Valve-Vacuator
5	285-17	1	Plug-Pipe

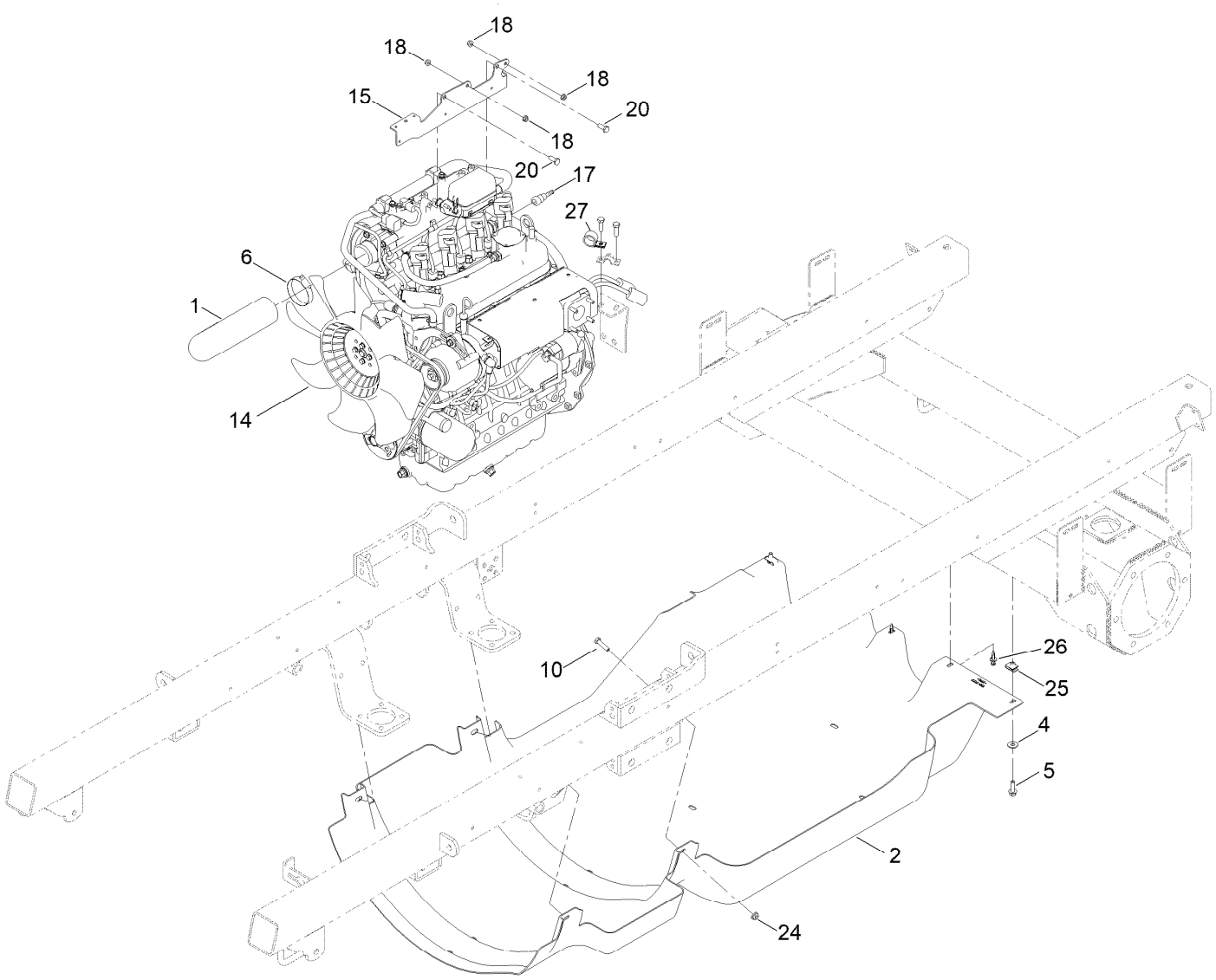

Engine and Shroud Assembly

Ref.	*Part Number*	*Qty.*	*Description*
1	120-3841	1	Hose-Cleaner, Air
2	164-1064	1	Shroud-Undercarriage
4	3256-3	2	Washer-Flat
5	3234-29	2	Screw-HHF
6	2412-130	1	Clamp-Hose
10	322-6	1	Screw-HH
14	138-9622	1	Engine-Kubota, Wg1605
15	145-3386-03	1	Mount-Fuse Box
17	125-2921	1	Fitting-Fuel
18	139-2619	4	Nut-HF
20	33114-020	2	Screw-HH
24	32128-20	1	Nut-HF
25	115-7721	2	Nut-Clip, U
26	125-9622	3	Rivet-Blind
27	110-0824	1	R-Clamp

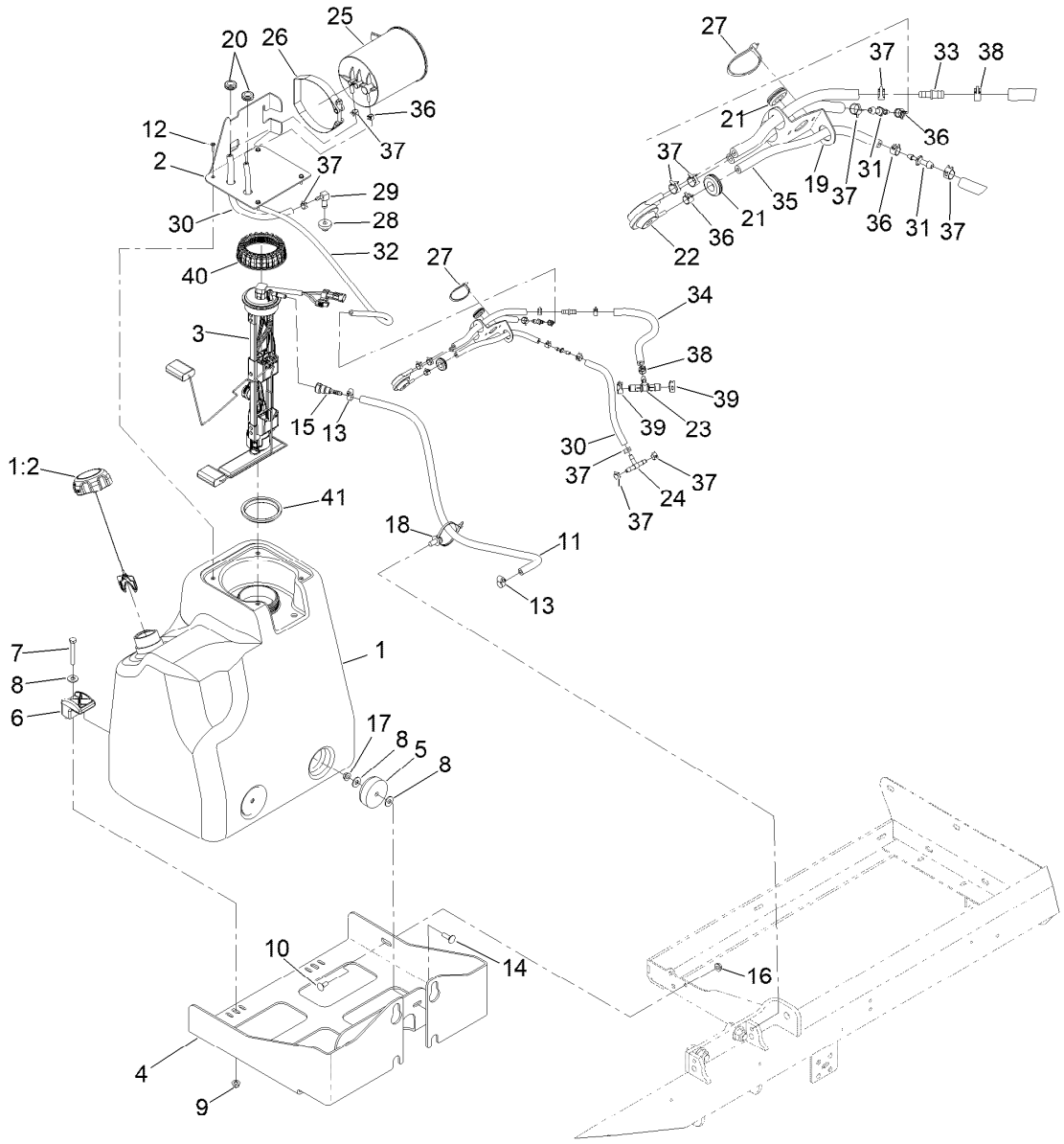

Fuel Tank Assembly

Ref.	Part Number	Qty.	Description
1	138-6267	1	Fuel Tank ASM
1:2	137-4127	1	Cap-Fuel
2	138-8268-03	1	Bracket-Canister
3	144-6210	1	Pump-Fuel
4	131-9550-03	1	Bracket-Tank, Fuel Tank
5	108-1605	2	Bumper-Recess
6	107-4543	2	Clamp
7	322-11	2	Screw-HH
8	3256-3	6	Washer-Flat
9	119-4041	2	Nut-HF
10	3230-1	1	Bolt-CARR
11	121-6321	1	Hose-Fuel
12	98-1375	4	Screw-HWH
13	2412-36	2	Clamp-Hose
14	3230-2	2	Bolt-CARR
15	125-2921	1	Fitting-Fuel
16	32128-20	1	Nut-HF
17	32128-25	2	Nut-HF
18	32180-031	1	Clip-Tree (W/Tie)
19	138-8269	1	Bracket-Valve
20	MSC14544	2	Grommet

Ref.	Part Number	Qty.	Description
21	112-9559	4	Grommet
22	116-2232	1	Valve-Control, Vacuum
23	138-6282	1	Fitting-Tee
24	99-5005	1	Fitting-Tee, Barbed
25	116-1442	1	Canister-Carbon, 1200Cc
26	116-2228	1	Clamp, T-Bolt
27	3290-378	1	Tie-Cable
28	46-6560	1	Bushing
29	104-5228	1	Fitting-Elbow, 90 DEG
30	109-0294	4	Hose-Fuel
31	106-8150	2	Fitting-Straight
32	119-6074	1	Hose-Fuel
33	103-2595	1	Connector
34	130-9191	1	Hose-Fuel
35	121-3003	1	Hose-Fuel
36	2412-80	4	Clamp-Hose
37	2412-98	10	Clamp-Hose
38	92-2379	2	Clamp-Hose
39	2412-143	2	Clamp-Hose
40	140-6245	1	Cap-Pump, Fuel
41	140-6246	1	Gasket-Pump, Fuel,

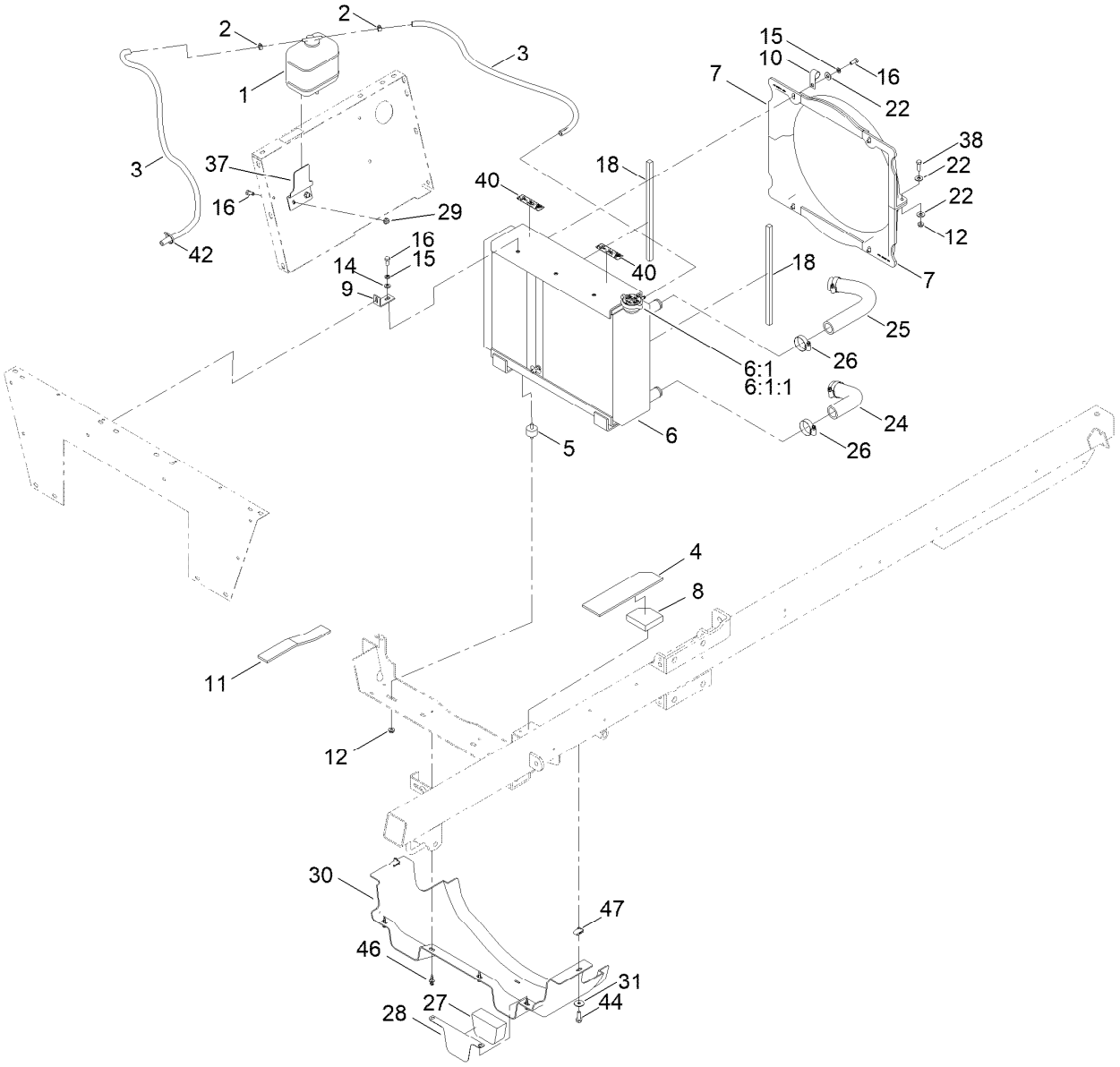

Radiator Assembly

Ref.	Part Number	Qty.	Description
1	108-0638	1	Bottle-Overflow
2	92-2379	3	Clamp-Hose
3	109-0309	2	Hose-Fuel
4	144-6167	1	Baffle-Foam, Radiator Upper
5	62-5480	2	Isolater-Seat
6	140-7344	1	Radiator/Oil Cooler ASM
6:1	117-5138	1	Cap-Radiator
6:1:1	117-3276	1	Decal-Danger
7	131-5779	2	Shroud-Fan
8	144-6166	1	Baffle-Foam, Radiator Lower
9	140-7352	2	Bracket-Radiator
10	2412-150	1	Clip-J
11	144-6169	1	Baffle-Foam, Radiator Upper LH
12	32128-20	4	Nut-HF
14	3256-23	2	Washer-Plain
15	3253-4	6	Washer-Lock
16	322-3	8	Screw-HH
18	144-6189	2	Strip-Foam, Radiator Side
22	3256-56	8	Washer-Flat
24	119-4992	1	Hose-Radiator
25	106-5239	1	Hose-Radiator, Upper
26	2412-111	4	Clamp-Hose, W/Liner
27	144-6165	1	Baffle-Foam, Heat Shield
28	144-6164-0P	1	Plate-Baffle
29	119-4041	2	Nut-HF
30	119-9393	1	Shield-Front Heat, Engine
31	3256-82	2	Washer-Flat
37	130-7102-0P	1	Bracket-Reservoir
38	322-5	2	Screw-HH
40	120-0627	2	Decal-Warning
42	3290-378	1	Tie-Cable
44	3234-29	2	Screw-HHF
46	125-9622	4	Rivet-Blind
47	115-7721	2	Nut-Clip, U

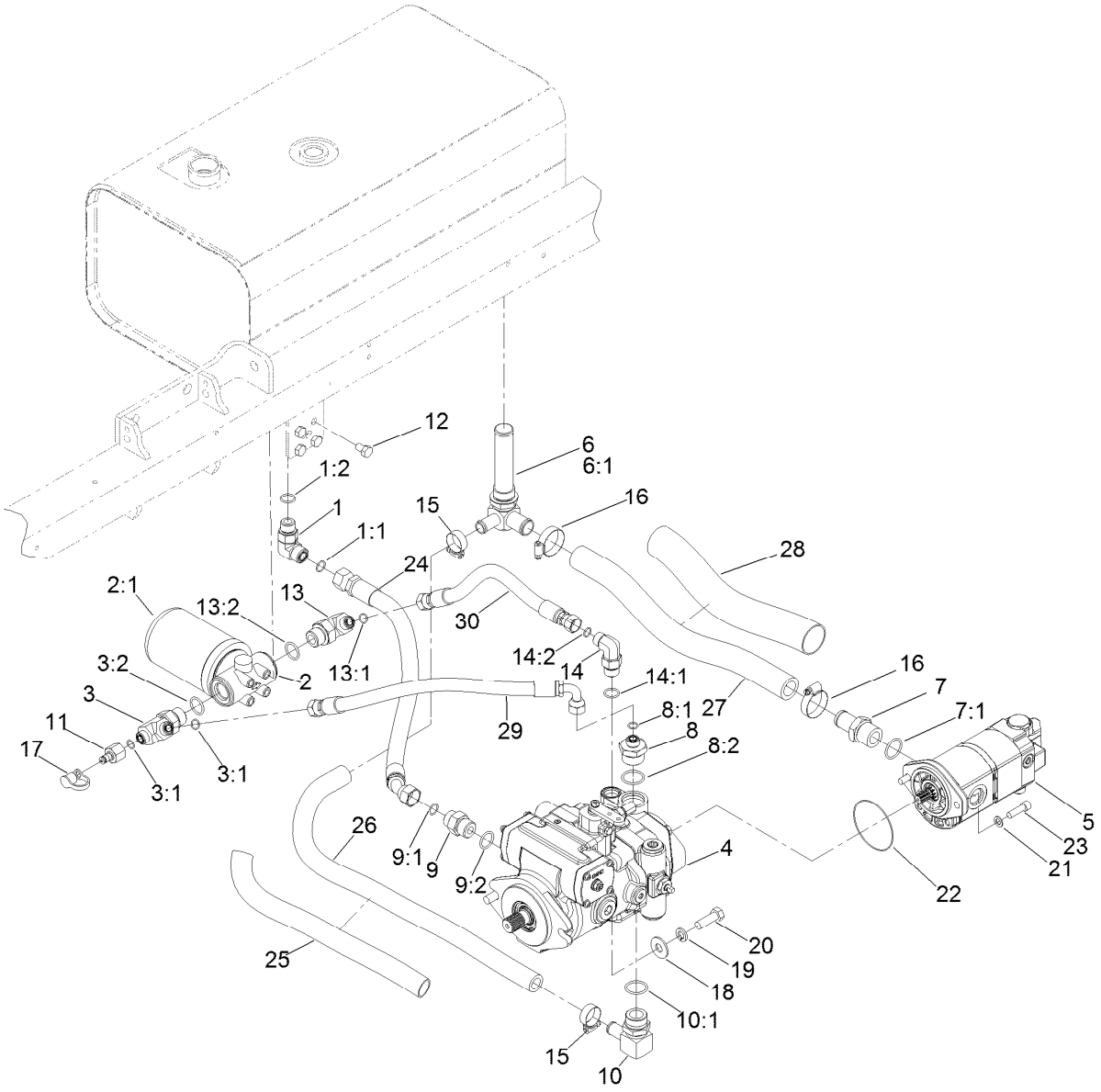

Hydraulic Pump and Filter Assembly

Ref.	Part Number	Qty.	Description
1	340-17	1	Fitting-Elbow, 90 DEG
1:1	237-65	1	O-Ring
1:2	237-80	1	O-Ring
2	93-2242	1	Oil Filter ASM
2:1	75-1310	1	Filter-HYD
3	117-0676	1	Fitting-Tee
3:1	237-30	2	O-Ring
3:2	237-81	1	O-Ring
4	117-0685	1	Piston Pump ASM
5	138-6193	1	Pump-Tandem
6	117-0684	1	Strainer-Tee
6:1	237-146	1	O-Ring
7	354-78	1	Fitting-STR
7:1	237-146	1	O-Ring
8	104-9178	1	Fitting-STR
8:1	237-30	1	O-Ring
8:2	237-146	1	O-Ring
9	340-8	1	Fitting-Straight
9:1	237-65	1	O-Ring
9:2	237-81	1	O-Ring
10	98-0971	1	Fitting-Elbow, 90

Ref.	Part Number	Qty.	Description
10:1	237-117	1	O-Ring
11	100-5616	1	Fitting
12	33115-016	4	Screw-HH
13	340-131	1	Fitting-HYD, 90 DEG
13:1	237-30	1	O-Ring
13:2	237-81	1	O-Ring
14	340-105	1	Fitting-Elbow, 90 DEG
14:1	237-80	1	O-Ring
14:2	237-30	1	O-Ring
15	2412-129	2	Clamp-Hose
16	2412-111	2	Clamp-Hose, W/Liner
17	354-79	1	Cap-Dust
18	3256-6	2	Washer-Flat
19	3253-7	2	Washer-Lock
20	325-6	2	Screw-HH
21	60-3540	2	Washer
22	60-3520	1	O-Ring
23	3274-1	2	Screw-HSH
24	112-2561	1	Hose-HYD
25	94-3688	1	Sleeve-Protective
26	119-5045	1	Hose-Suction

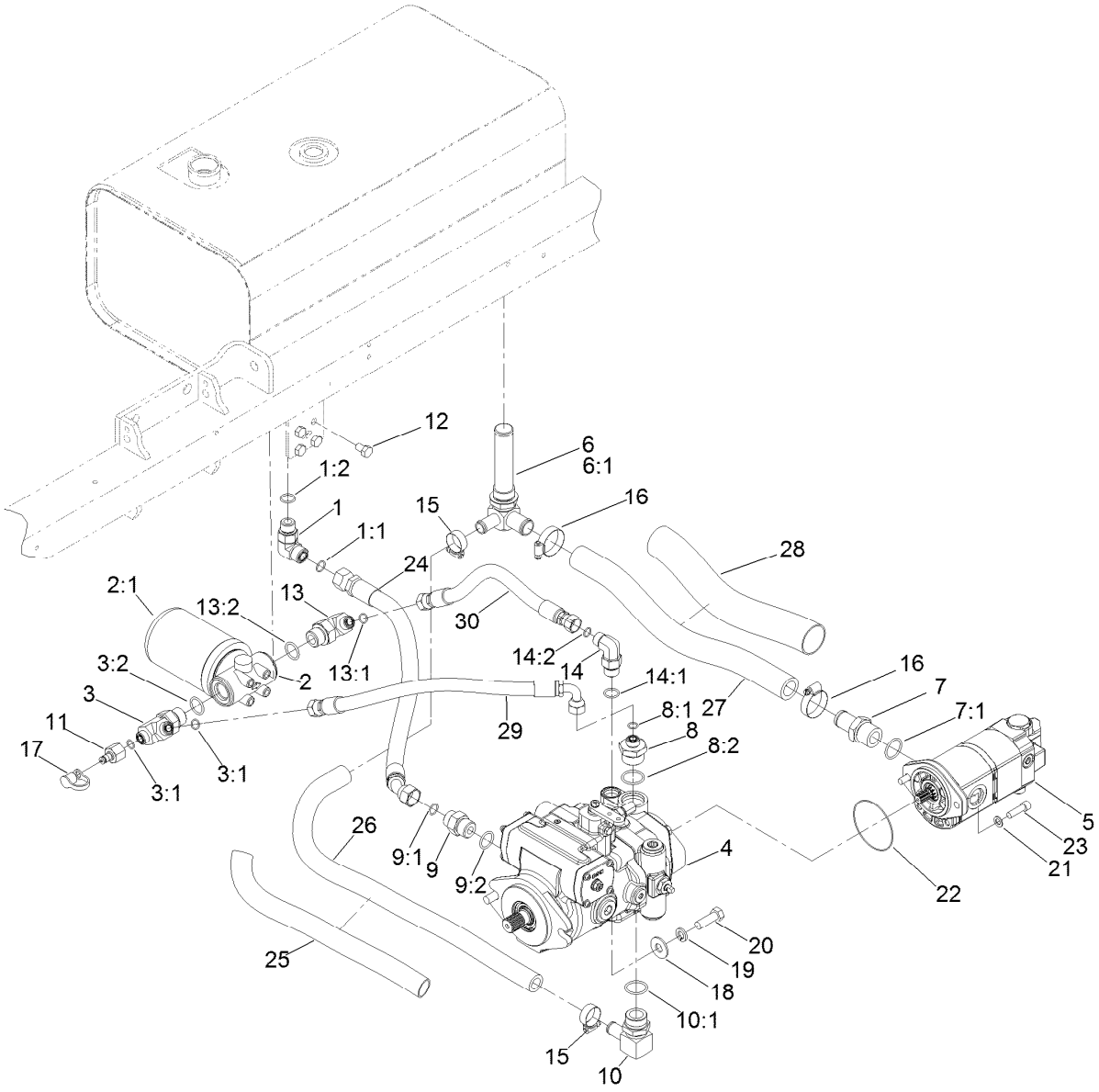

Hydraulic Pump and Filter Assembly (continued)

Ref.	Part Number	Qty.	Description
27	117-0681	1	Hose ASM
28	107-3589	1	Sleeve-Hose
29	117-0686	1	Hose-HYD
30	117-0729	1	Hose ASM

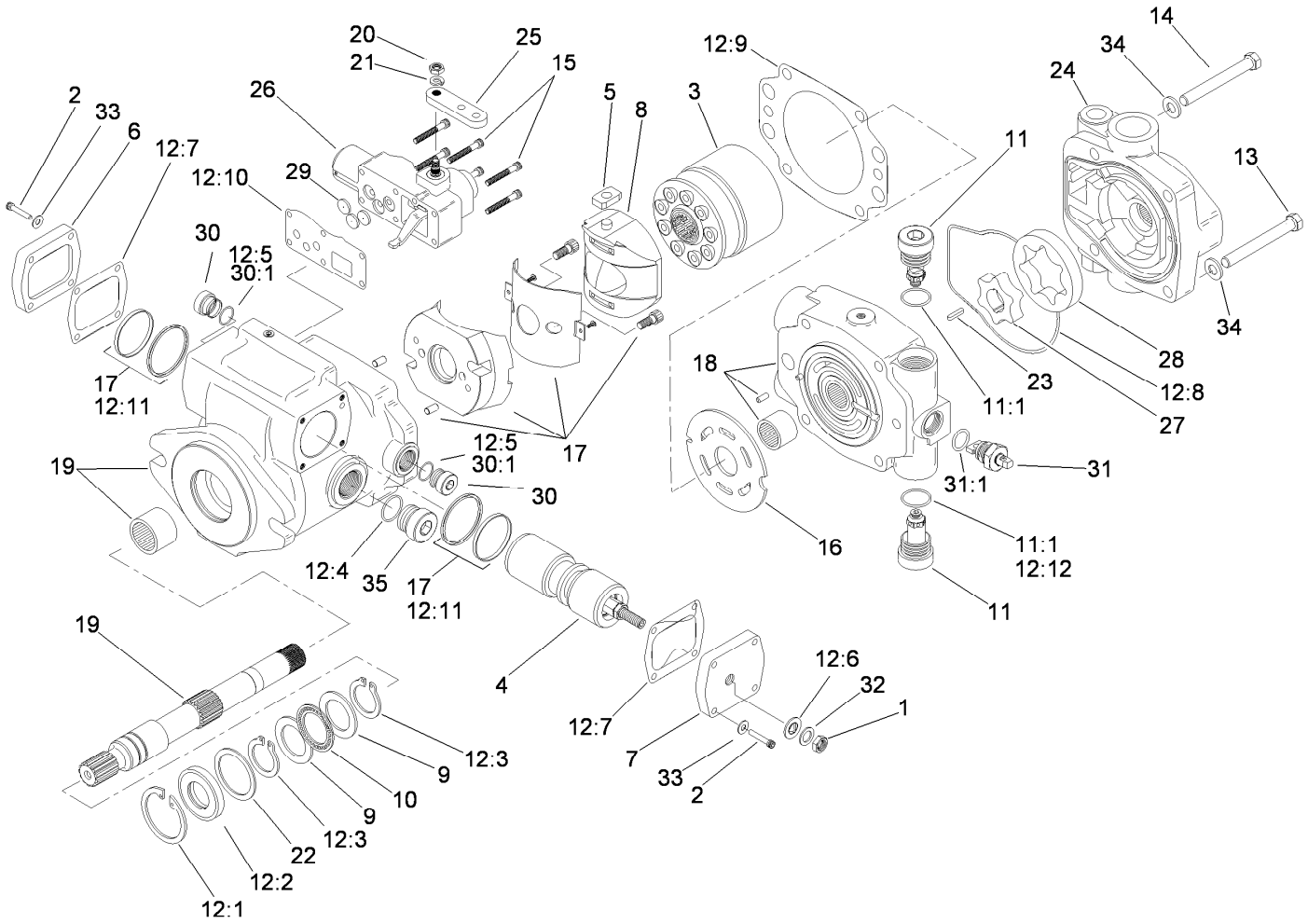

Piston Pump Assembly No. 117-0685

Ref.	Part Number	Qty.	Description
1	3220-3	1	Nut-HJ
2	93-6337	8	Screw
3	99-8701	1	Rotating Kit
4	105-2856	1	Piston-Servo
5	94-3032	1	Follower-Piston
6	94-3033	1	Plate-Cover
7	105-9853	1	Plate-Cover
8	94-3026	1	Camplate ASM
9	76-6950	2	Race-Thrust
10	76-6960	1	Bearing-Thrust
11	105-2858	2	Valve-Relief
11:1		1	O-Ring ■
12	107-1561	1	Seal Kit ●
12:1	60-6260	1	Ring
12:2	105-3331	1	Seal-Shaft
12:3	76-7000	2	Ring-Retaining
12:4		2	O-Ring ■
12:5	93-6314	2	O-Ring ●

Ref.	Part Number	Qty.	Description
12:6	94-3027	1	Washer-Seal
12:7	93-6339	2	Gasket
12:8	105-2905	1	O-Ring ●
12:9	105-2900	1	Gasket-Housing
12:10	105-2901	1	Gasket-Housing, Control
12:11		2	Seal ASM ■
12:12	74-9380	1	O-Ring ●
13	323-15	2	Screw-HH
14	323-16	2	Screw-HH
15	93-6324	6	Screw
16	99-8704	1	Plate-Valve
17		1	Housing ■
18	105-2904	1	Backplate
19	93-6344	1	Driveshaft
20	3217-5	1	Nut-Hex
21	3253-3	1	Washer-Lock
22	60-6240	1	Washer
23	93-6375	1	Key

● Not illustrated

■ Not serviced separately

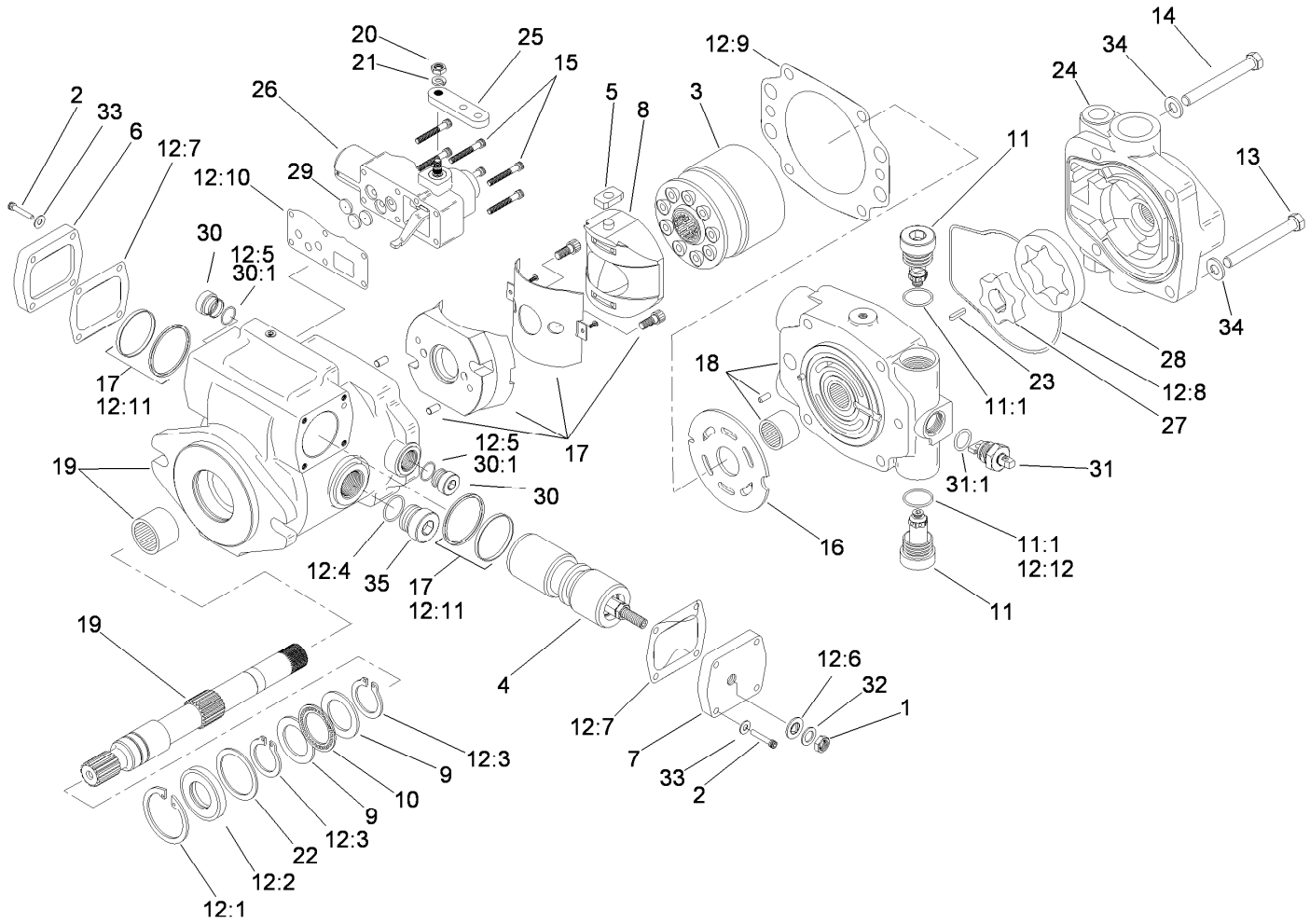

Piston Pump Assembly No. 117-0685 (continued)

Ref.	Part Number	Qty.	Description
24	95-2110	1	Adaptor
25	105-2862	1	Arm-Control
26	115-4446	1	Control-Servo, Manual
27	93-6365	1	Geroter-Inner
28	93-6364	1	Geroter-Outer
29	94-3041	3	Orifice-Control (.028 DIA)
30	74-9280	2	Plug ASM

Ref.	Part Number	Qty.	Description
30:1		1	O-Ring ■
31	105-2913	1	Valve-Bypass
31:1		1	O-Ring ■
32	94-3030	1	Washer
33	93-6336	8	Washer
34	3256-24	4	Washer-Plain
35		1	Plug ASM ■

● Not illustrated

■ Not serviced separately

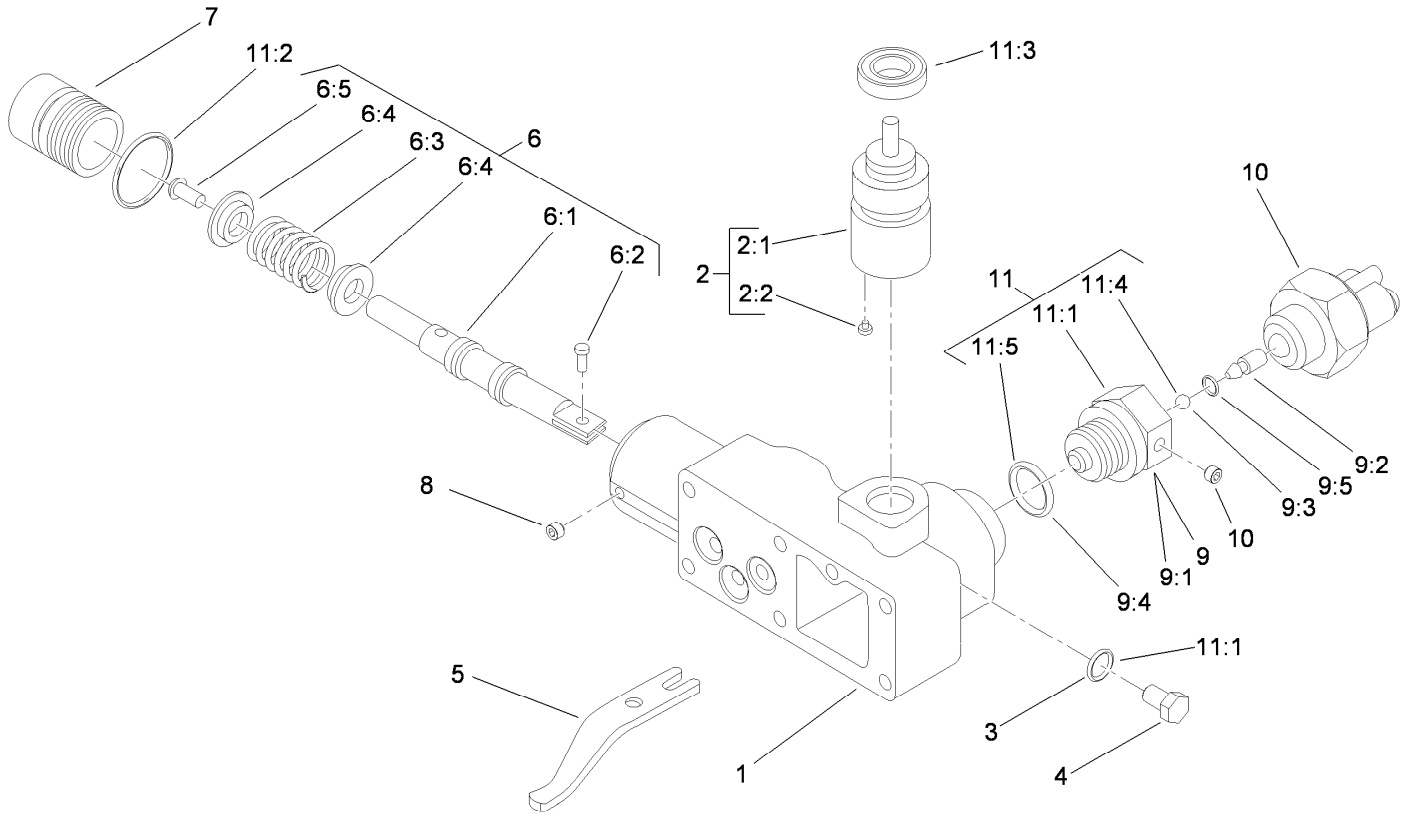

Control Assembly No. 115-4446

Ref.	Part Number	Qty.	Description
1		1	Housing-Control ●
2	108-7099	1	Input Control Shaft ASM
2:1		1	Shaft ●
2:2		1	Pin ●
3		1	O-Ring ●
4		1	Plug ●
5		1	Link-Feedback ●
6	108-7098	1	Valve Spool ASM
6:1		1	Valve-Spool ●
6:2		1	Pin-Dowel ●
6:3		1	Spring ●
6:4		2	Retainer ●
6:5		1	Screw ●
7		1	Plug ●

Ref.	Part Number	Qty.	Description
8		2	Screw-Set ●
9	108-8003	1	Adaptor ASM
9:1		1	Adaptor-Lockout, Neutral ●
9:2		1	Pin ●
9:3		1	Ball ●
9:4		1	O-Ring ●
9:5		1	O-Ring ●
10	115-3795	1	Switch-Neutral
11	94-3044	1	Seal Kit
11:1	117-8979	1	Seal-Shaft
11:2	105-2901	1	Gasket-Housing, Control
11:3		1	O-Ring ●
11:4		1	O-Ring ●
11:5		1	Seal-Wiper ●

● Not serviced separately

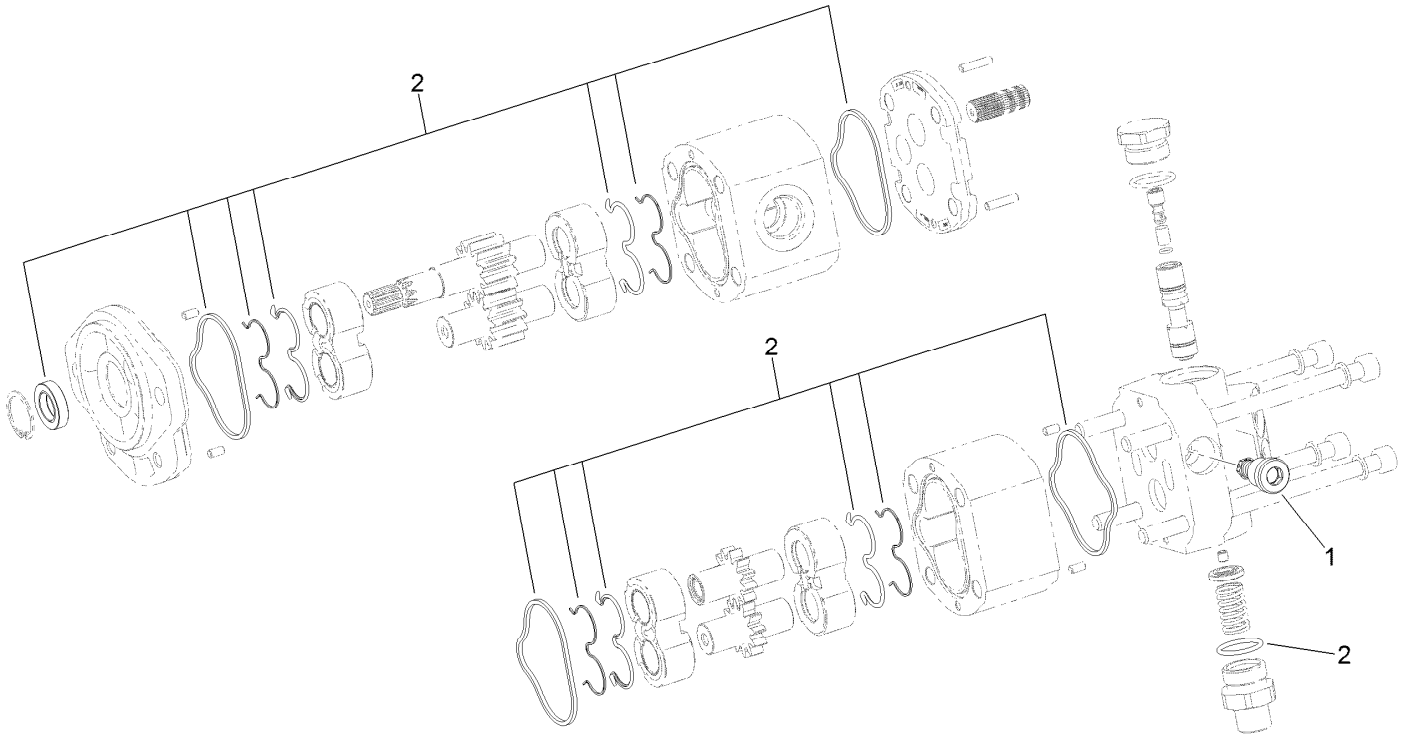

Tandem Pump Assembly No. 138-6193

Ref.	*Part Number*	*Qty.*	*Description*
1	138-6257	1	Valve-Relief
2	138-6258	1	Seal Kit

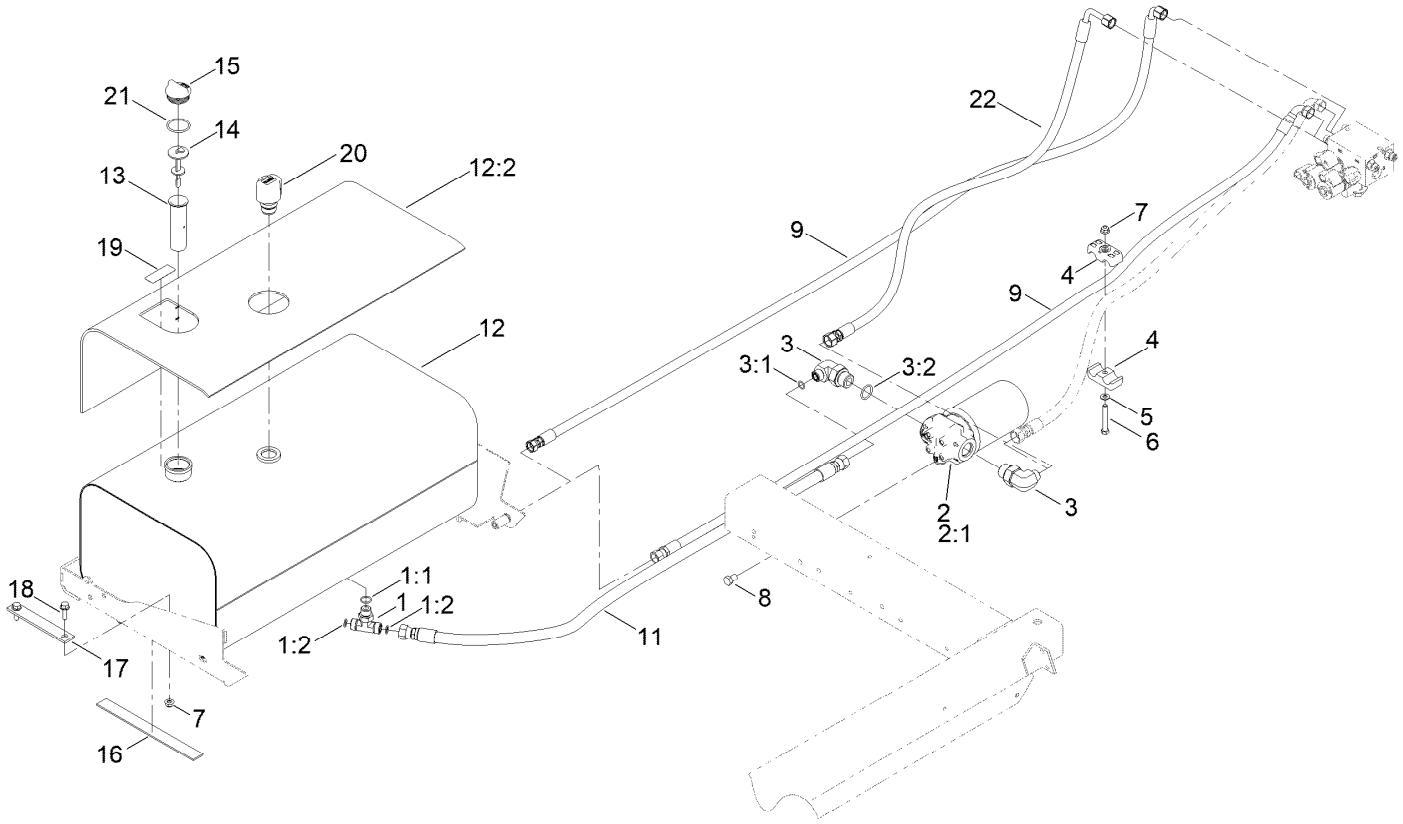

Hydraulic Tank Assembly

Ref.	Part Number	Qty.	Description
1	340-157	1	Fitting-HYD, Tee
1:1	237-79	1	O-Ring
1:2	237-30	2	O-Ring
2	93-2242	1	Oil Filter ASM
2:1	75-1310	1	Filter-HYD
3	340-131	2	Fitting-HYD, 90 DEG
3:1	237-30	1	O-Ring
3:2	237-81	1	O-Ring
4	94-8105	2	Clamp-Tube
5	3256-23	1	Washer-Plain
6	322-11	1	Screw-HH
7	119-4041	5	Nut-HF
8	33115-016	4	Screw-HH
9	119-0588	1	HYD Hose ASM

Ref.	Part Number	Qty.	Description
11	106-3672	1	HYD Hose ASM
12	131-5799	1	Hydraulic Tank ASM
12:2	131-5787	1	Cover-Tank, Hydraulic
13	92-1705	1	Filter-Screen
14	105-2812	1	Dipstick
15	93-7498	1	Plug-Plastic
16	41995	2	Strip-Armaflex
17	94-7068	2	Strap
18	3234-17	4	Screw-HHF
19	93-6686	1	Decal-Oil, HYD
20	115-9793	1	Breather
21	237-101	1	O-Ring
22	161-4135	1	HYD Hose ASM ●

● Not illustrated

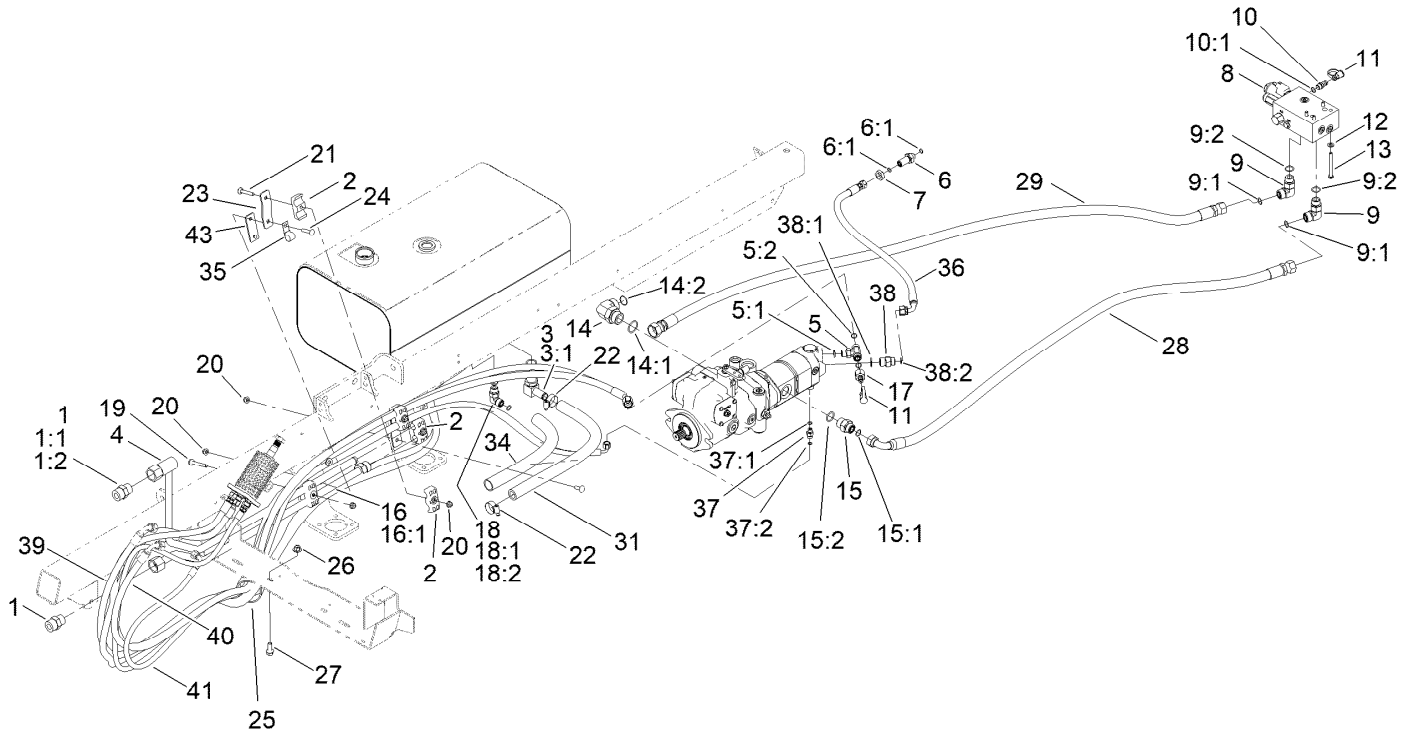

Hydrauic Hose Assembly

Ref.	Part Number	Qty.	Description
1	340-9	2	Fitting-STR
1:1	237-58	1	O-Ring
1:2	237-81	1	O-Ring
2	94-8105	8	Clamp-Tube
3	353-987	1	Fitting-Elbow, 90
3:1	237-81	1	O-Ring
4	140-7356	1	HYD Tube ASM
5	340-157	1	Fitting-HYD, Tee
5:1	237-79	1	O-Ring
5:2	237-30	2	O-Ring
6	340-71	1	Fitting-Straight, Bulkhead
6:1	237-22	2	O-Ring
7	340-70	1	Nut-Lock
8	117-0708	1	Pump Control Valve ASM
9	340-17	2	Fitting-Elbow, 90 DEG
9:1	237-65	1	O-Ring
9:2	237-80	1	O-Ring
10	59-7410	1	Fitting-Diagnostic
10:1	237-42	1	O-Ring
11	354-79	2	Cap-Dust
12	3256-23	4	Washer-Plain

Ref.	Part Number	Qty.	Description
13	322-14	4	Screw-HH
14	340-129	2	Fitting-Elbow, 90 DEG
14:1	237-146	1	O-Ring
14:2	340-65	1	O-Ring
15	340-8	1	Fitting-Straight
15:1	237-65	1	O-Ring
15:2	237-81	1	O-Ring
16	140-7345	1	HYD Tube, ASM
16:1	237-58	1	O-Ring
17	100-5616	1	Fitting
18	340-98	1	Fitting-Elbow, 90 DEG
18:1	237-79	1	O-Ring
18:2	237-30	1	O-Ring
19	138-9270	2	Screw-HHF
20	119-4041	8	Nut-HF
21	3230-6	2	Bolt-CARR
22	2412-129	2	Clamp-Hose
23	117-0689	2	Plate-Mount, Tube Clamps
24	33-5790	1	Screw-CARR
25	2412-102	1	Clamp-R
26	32128-43	1	Nut-Flange

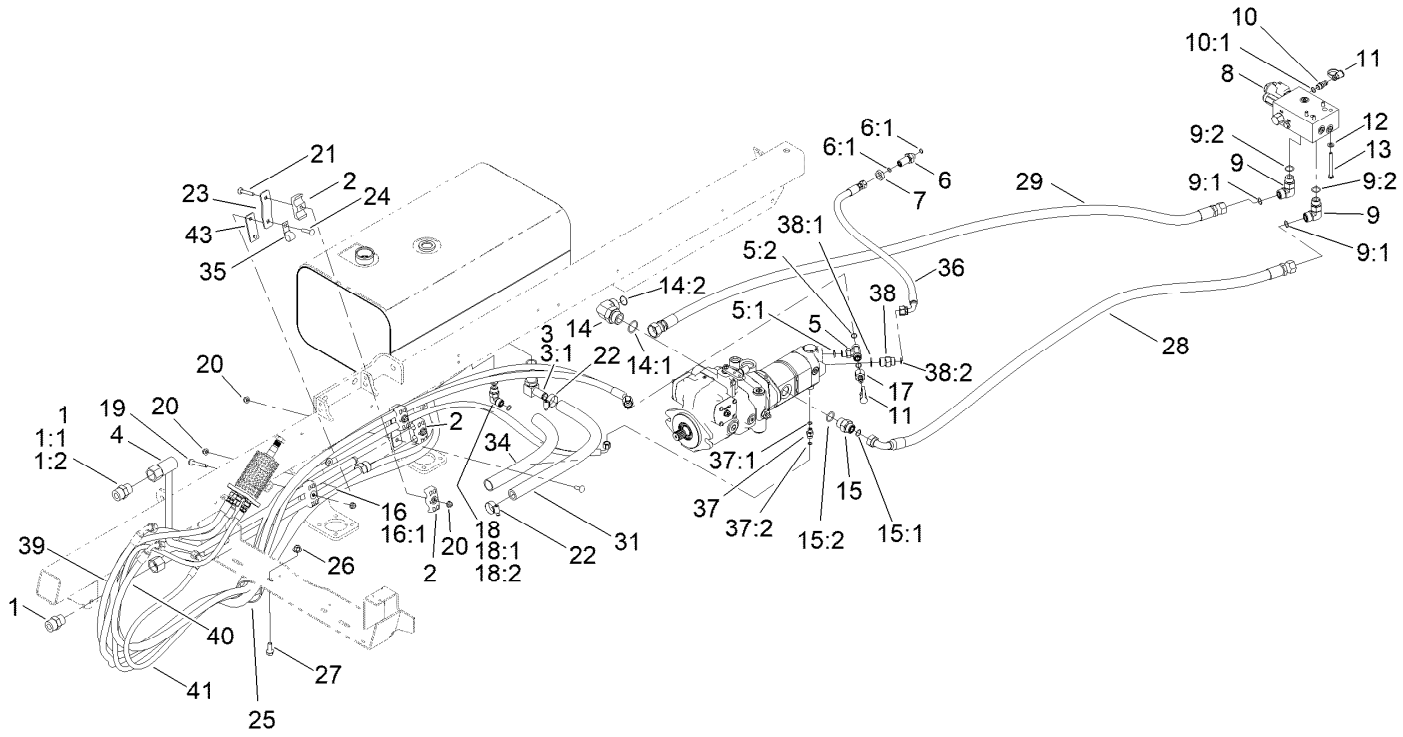

Hydrauic Hose Assembly (continued)

Ref.	Part Number	Qty.	Description
27	3234-11	1	Screw-HHF
28	117-0680	1	Hose ASM
29	117-0682	1	Hose ASM
31	119-5045	1	Hose-Suction
34	94-3688	1	Sleeve-Protective
35	2412-150	1	Clip-J
36	138-6196	1	Hose ASM
37	340-92	1	Fitting-Straight
37:1	237-78	1	O-Ring

Ref.	Part Number	Qty.	Description
37:2	237-21	1	O-Ring
38	340-6	1	Fitting-Straight
38:1	237-30	1	O-Ring
38:2	237-80	1	O-Ring
39	138-6256	1	Hose ASM
40	138-6250	1	Hose ASM
41	138-6194	1	Hose ASM
43	164-1036-03	2	Mount-Undercarriage

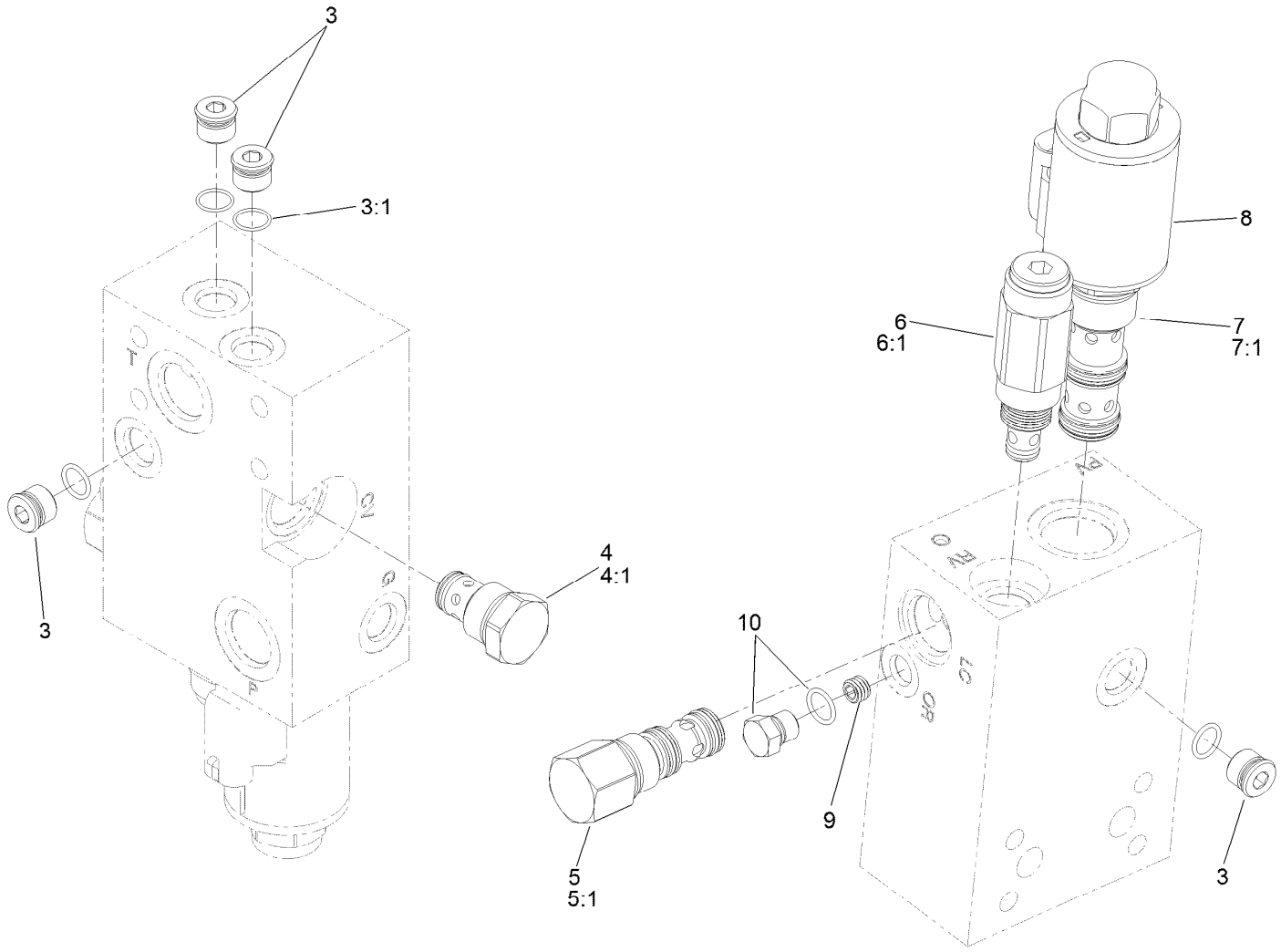

Pump Control Valve Assembly No. 117-0708

Ref.	*Part Number*	*Qty.*	*Description*
3	353-512	4	Plug
3:1	237-78	1	O-Ring
4	110-8881	1	Valve-Check
4:1	105-9159	1	Seal Kit ●
5	120-1660	1	Compensator-Pressure
5:1	107-7813	1	Seal Kit ●
6	117-8312	1	Valve-Relief
6:1	105-9156	1	Seal Kit
7	120-2590	1	Valve-Flow Control
7:1	114-5515	1	Seal Kit
8	120-2589	1	Coil-12Vdc
9	107-1987	1	Orifice-0.040
10	117-0115	1	Plug

● Not illustrated



Steering Hydraulic Assembly

Ref.	Part Number	Qty.	Description
1	33114-020	4	Screw-HH
2	98-1471	1	Wheel-Steering
2:1	98-1468	1	Cover-Wheel, Steering
4	98-1459	1	Decal
5	3256-27	1	Washer-Flat
6	340-77	2	Fitting-Elbow, 90 DEG
6:1	237-22	1	O-Ring
6:2	237-42	1	O-Ring
7	137-7509	1	Valve-Steering
8	130-8296	1	Sleeve-Steering Cover
9	3296-33	1	Nut-Lock, NI
10	137-4295	4	Fitting-STR
10:1	138-6248	1	O-Ring M18
10:2	237-22	1	O-Ring

Ref.	Part Number	Qty.	Description
11	137-4076	1	Valve-Steering Ehi
12	137-4294	4	Fitting-STR
12:1	138-6249	1	O-Ring M22
12:2	237-30	1	O-Ring
13	138-6187	2	Fitting-STR
13:1	138-6247	1	Seal-Oring
13:2	237-22	1	O-Ring
14	138-6170	1	Hose ASM
15	138-6171	1	Hose ASM
16	138-6188	1	Hose ASM
17	138-6191	1	Hose ASM
18	138-6245	1	Hose ASM
19	138-6153	1	Hose ASM
20	138-6154	1	Hose ASM

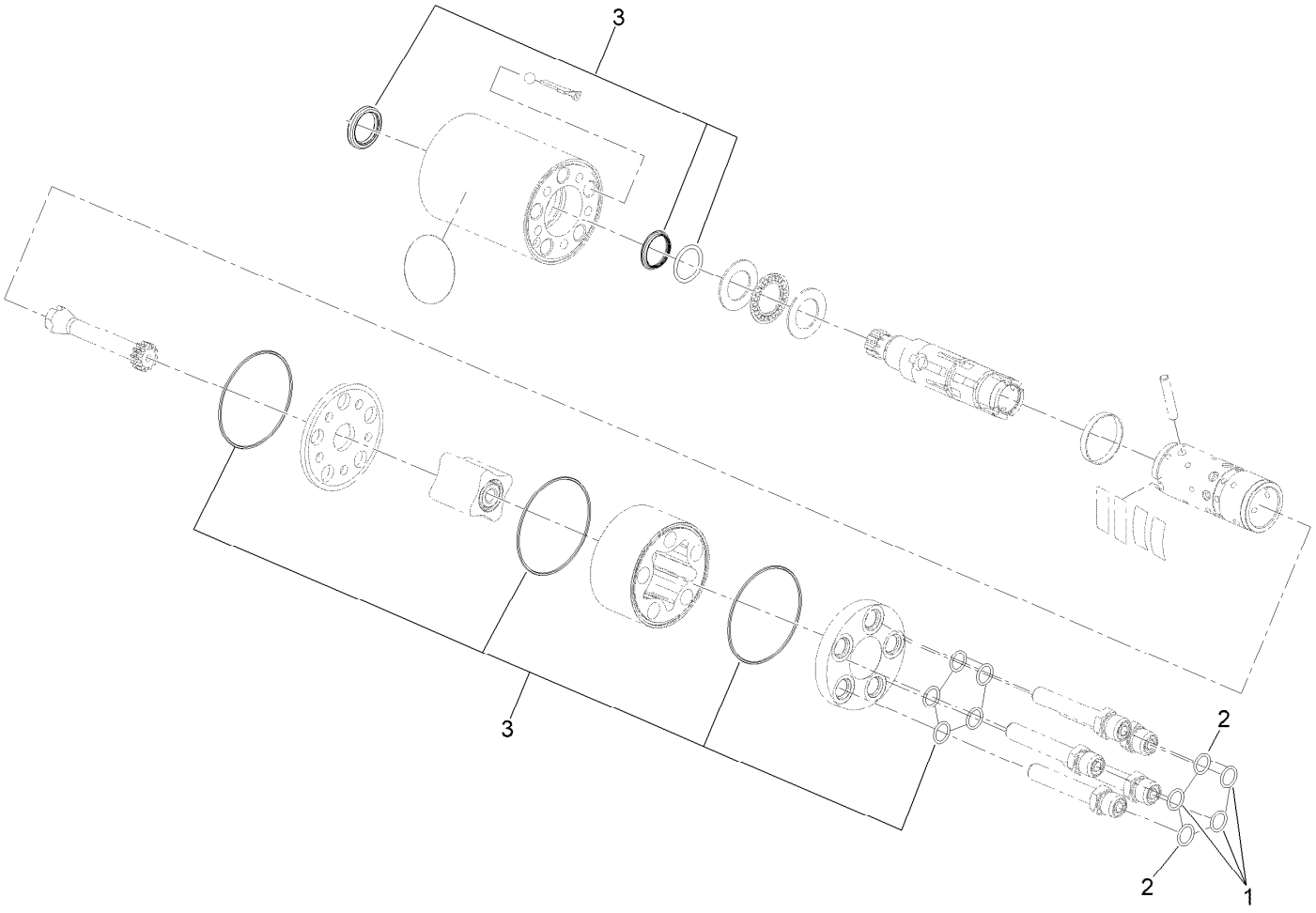

Steering Valve Assembly No. 137-7509

Ref.	*Part Number*	*Qty.*	*Description*
1	237-21	3	O-Ring
2	237-22	2	O-Ring
3	106-6716	1	Seal Kit

Hydraulic Valve Assembly No. 137-4076

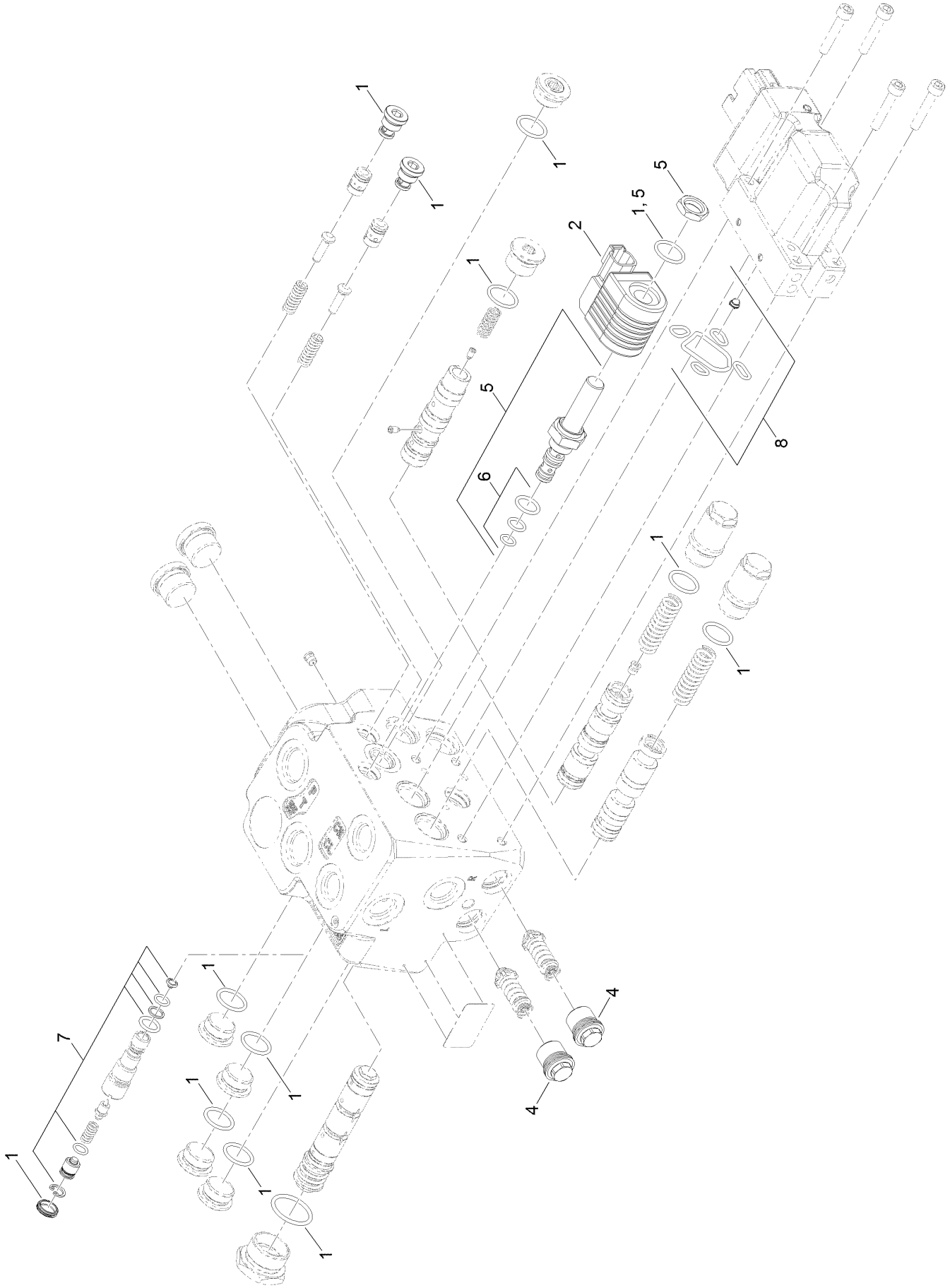

Hydraulic Valve Assembly No. 137-4076 (continued)

Ref.	Part Number	Qty.	Description
1	138-6270	1	Seal Kit
2	138-6271	1	Coil Kit
4	138-6273	1	Shock Valve Kit
5	138-6274	1	Cartridge Kit
6	138-6275	1	Spool Kit
7	138-6276	1	Relief Valve Kit
8	138-6277	1	Pve Kit

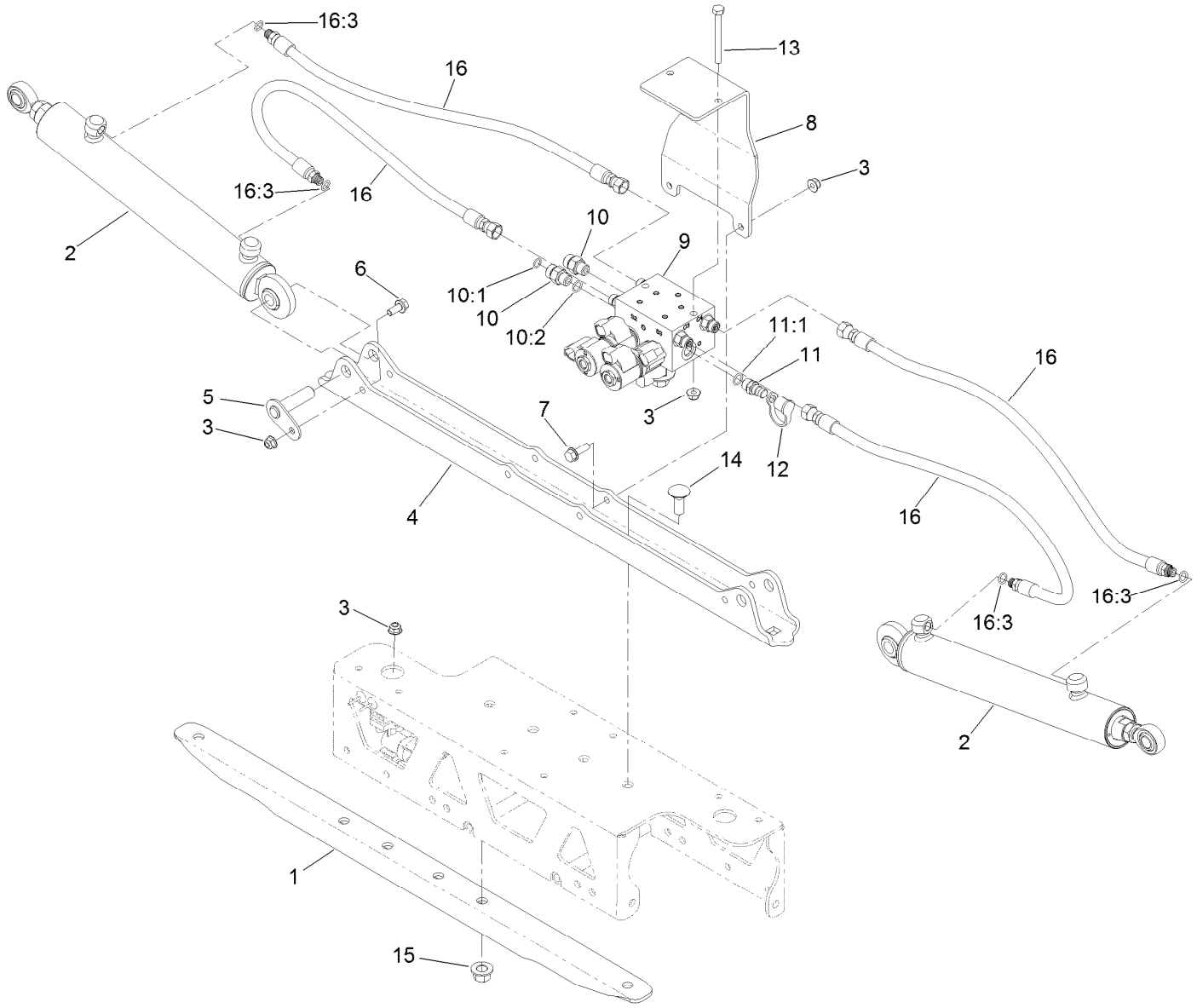

Boom Lift Assembly

Ref.	Part Number	Qty.	Description
1	131-0285-03	1	Stiffener-Channel
2	117-0701	2	Hydraulic Cylinder ASM
3	119-4041	7	Nut-HF
4	131-0275-03	1	Plate-Mount
5	112-7884	2	Pin-Pivot
6	110-5053	2	Screw-HHF
7	3234-29	2	Screw-HHF
8	130-8201-03	1	Mount-Valve
9	136-2400	1	On-Off Boom Lift Valve ASM
10	340-2	2	Fitting-Straight

Ref.	Part Number	Qty.	Description
10:1	237-22	1	O-Ring
10:2	237-42	1	O-Ring
11	59-7410	1	Fitting-Diagnostic
11:1	237-42	1	O-Ring
12	354-79	1	Cap-Dust
13	322-14	2	Screw-HH
14	110-5067	4	Screw-CARR
15	139-1689	4	Nut-HF
16	131-0276	4	Hose ASM
16:3	237-78	1	O-Ring

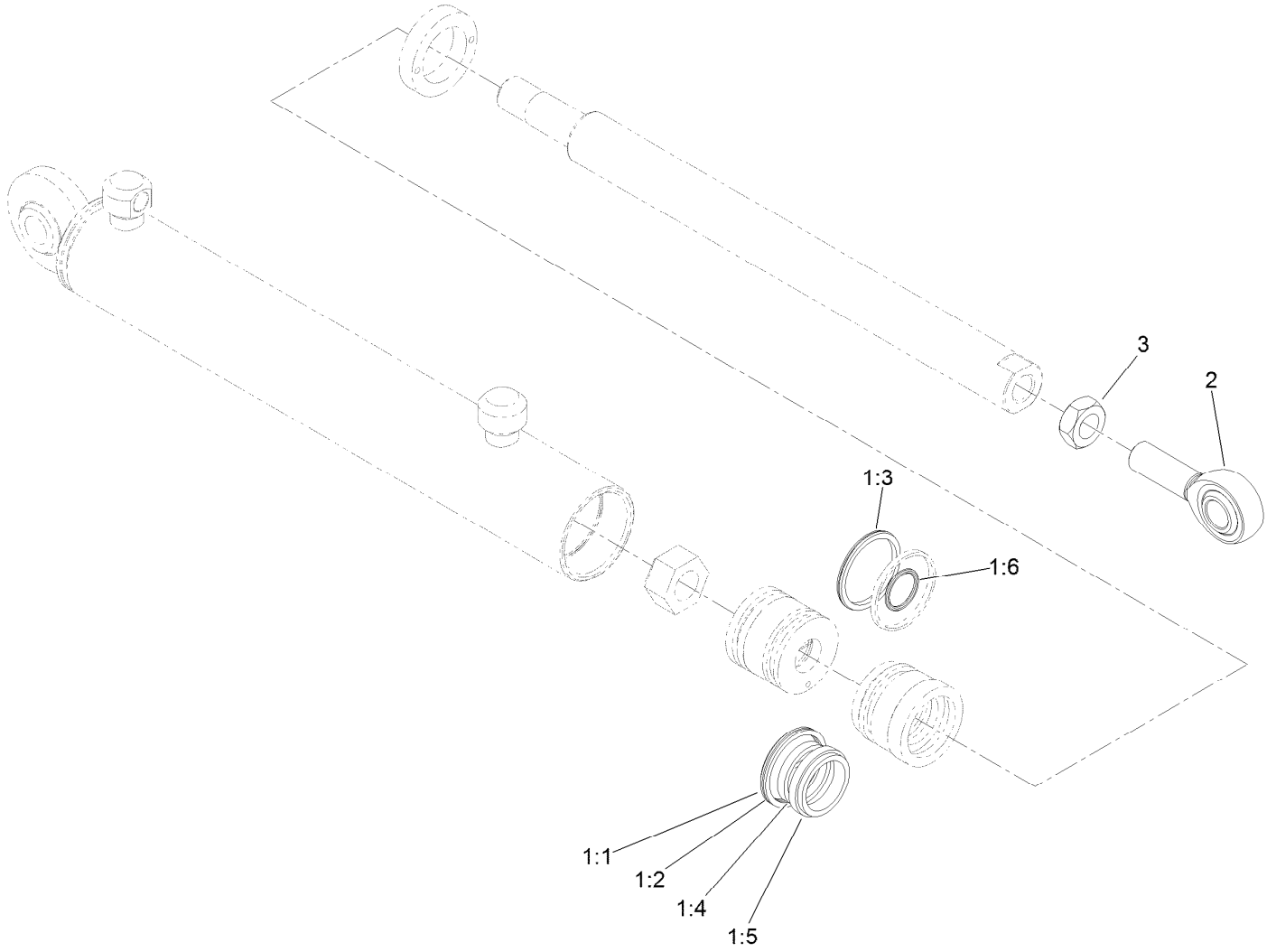

Hydraulic Cylinder Assembly No. 117-0701

Ref.	*Part Number*	*Qty.*	*Description*
1	119-8026	1	Seal Kit ●
1:1		1	O-Ring ■
1:2		1	Ring-Backup ■
1:3		1	Bp Seal ■
1:4		1	Bs Seal ■
1:5		1	Dust Seal ■
1:6		1	O-Ring ■
2	119-8027	1	Rod End
3	3220-6	1	Nut-Jam

● Not illustrated

■ Not serviced separately

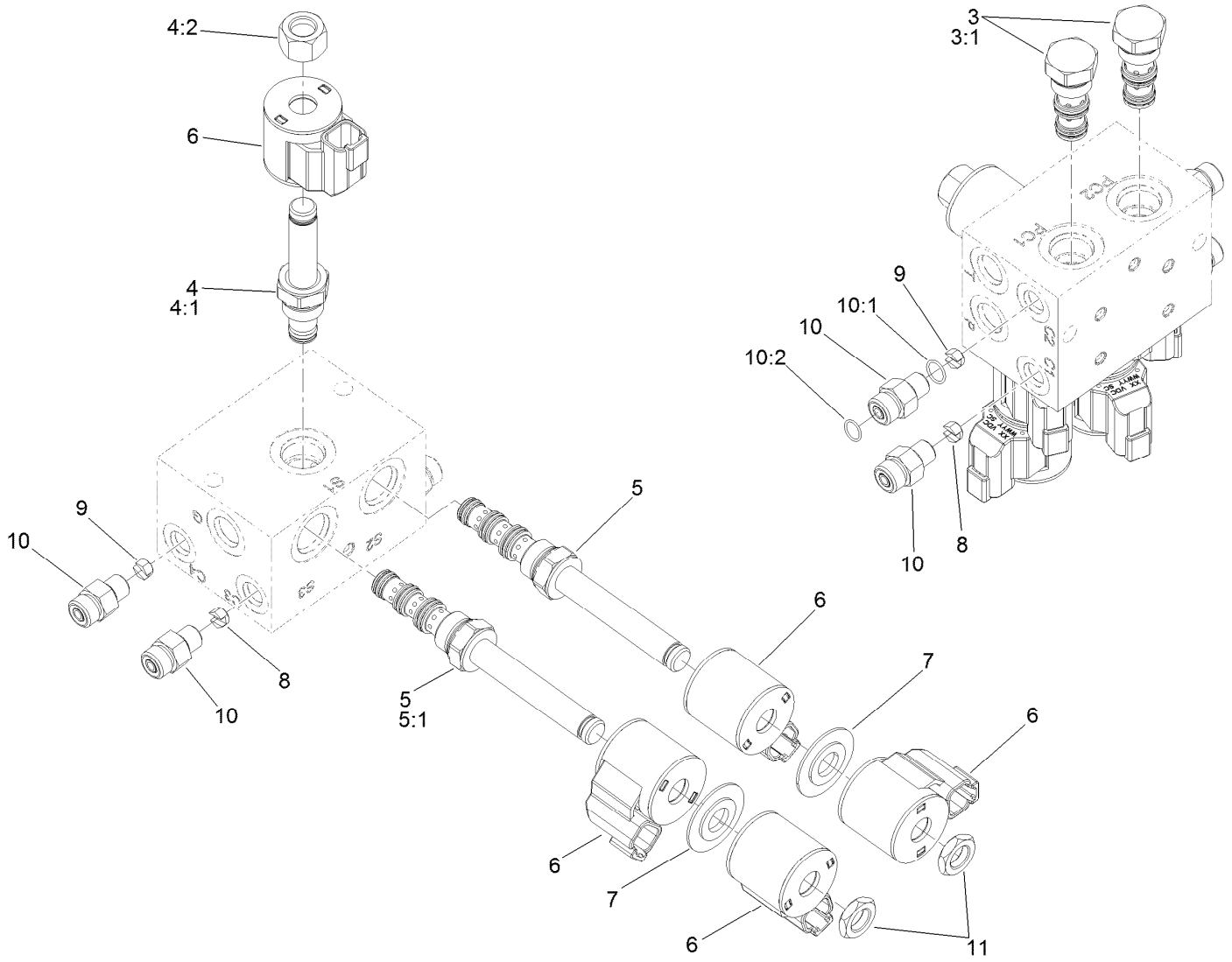

On-Off Boom Lift Valve Assembly No. 136-2400

Ref.	*Part Number*	*Qty.*	*Description*
3	136-2430	2	Valve-Check, Po
3:1	120-0886	1	Seal Kit
4	107-7517	1	Valve-Solenoid
4:1	105-9156	1	Seal Kit
4:2	107-7812	1	Nut-Solenoid
5	120-2587	2	Valve-Solenoid
5:1	112-6520	1	Seal Kit ●
6	119-8036	5	Coil
7	120-2586	2	Spacer-Coil
8	110-8903	2	Orifice-Control, Flow (0.055)
9	125-8849	2	Orifice-Flow Control
10	340-92	4	Fitting-Straight
10:1	237-78	1	O-Ring
10:2	237-21	1	O-Ring
11	110-2634	2	Nut-Coil

● Not illustrated

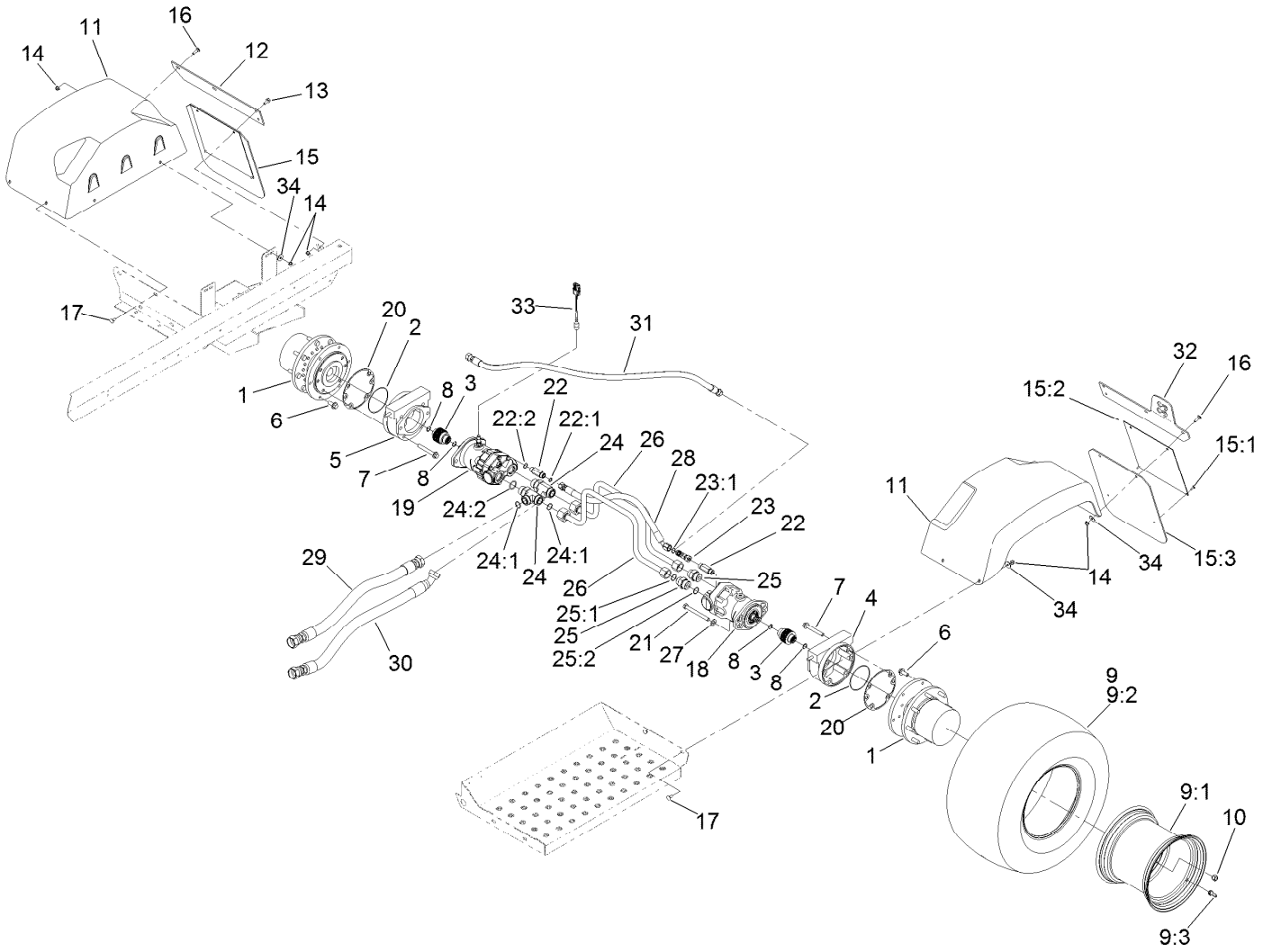

Rear Drive Assembly

Ref.	Part Number	Qty.	Description
1	136-2913	2	Planetary ASM
2	237-166	2	O-Ring
3	100-3046	2	Shaft-Brake, Splined
4	100-3069	1	RH Brake ASM
5	100-3070	1	LH Brake ASM
6	33106-030	12	Screw-HHF
7	33106-080	8	Screw-HHF
8	93-7972	4	Ring-Retaining, Internal
9	145-3376	2	Tire/Wheel ASM
9:1	133-2723	1	Wheel
9:2	145-3377	1	Tire 26.5/14-12, 6 Ply
9:3	232-27	1	Stem-Valve
10	139-2564	16	Nut-Lug
11	93-6498	2	Fender-Rear
12	93-6528-03	1	Strap-Mount, Fender
13	3234-5	4	Screw-HHF
14	119-4041	16	Nut-HF
15	94-7127	2	Splash Guard ASM
15:1	114439	2	Rivet-Blind
15:2	94-7128-03	1	Plate-Guard, Splash
15:3	94-7129	1	Guard-Splash

Ref.	Part Number	Qty.	Description
16	3230-2	4	Bolt-CARR
17	3230-1	8	Bolt-CARR
18	132-5631	1	HYD Motor ASM
19	136-2373	1	Motor-Hydraulic (W/Speed Sensor)
20	93-7984	2	Gasket
21	33116-110	4	Screw-HH
22	119-4854	2	Fitting-STR
22:1	237-30	1	O-Ring
22:2	237-79	1	O-Ring
23	340-104	1	Fitting-Tee
23:1	237-30	2	O-Ring
24	104-3795	2	Fitting-Tee
24:1	340-65	2	O-Ring
24:2	237-146	1	O-Ring
25	340-91	2	Fitting-STR
25:1	237-58	1	O-Ring
25:2	237-146	1	O-Ring
26	117-0674	2	Tube-Traction
27	33096-00	4	Washer-Flat
28	131-9634	1	Hydraulic Hose ASM

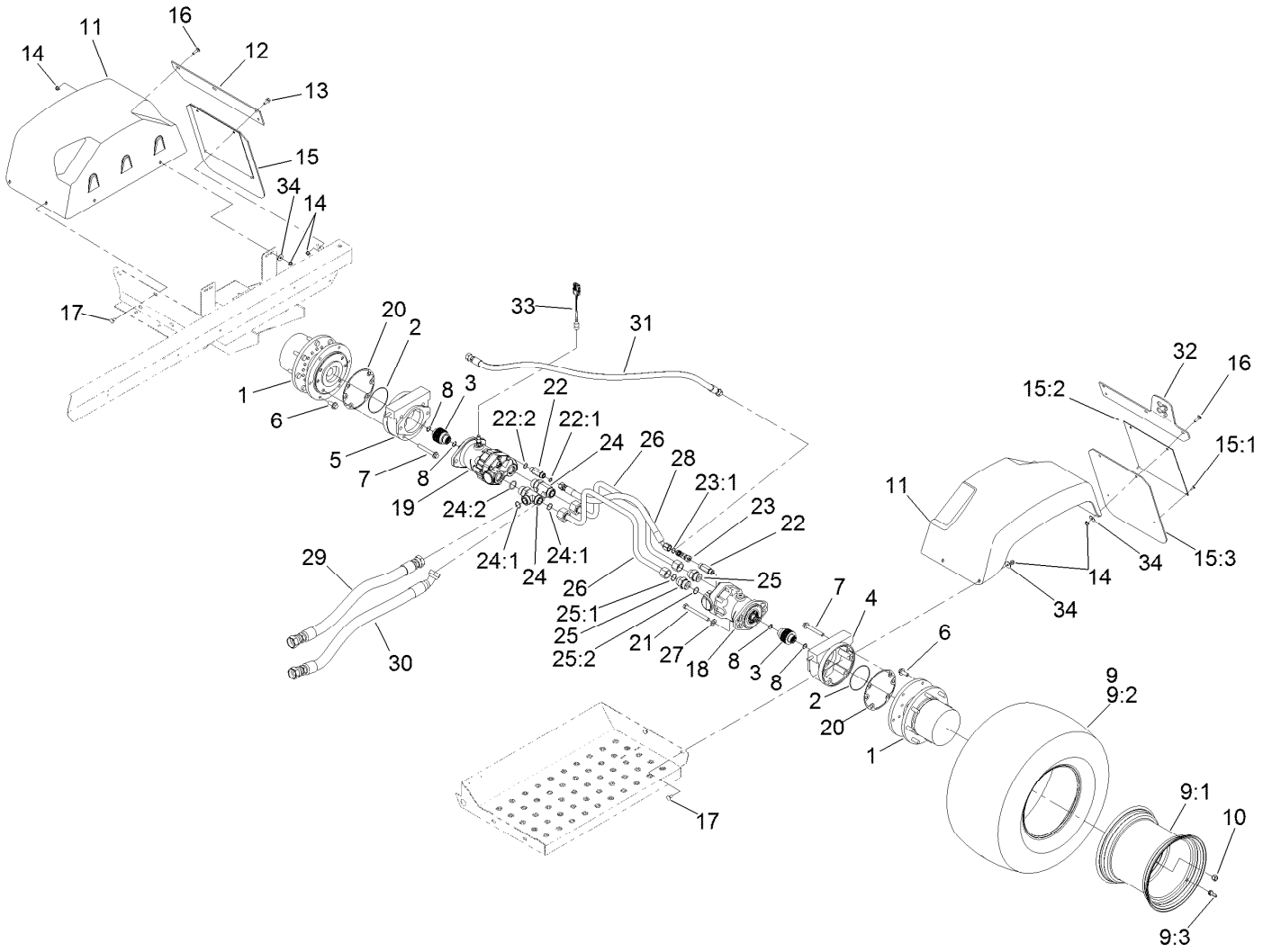

Rear Drive Assembly (continued)

Ref.	Part Number	Qty.	Description
29	120-8563	1	Hose ASM
30	120-8564	1	Hose ASM
31	119-0582	1	Hose ASM
32	136-2308-03	1	Support-Mount, Drain
33	136-2339	1	Harness-Wire, Adaptor
34	3256-82	12	Washer-Flat

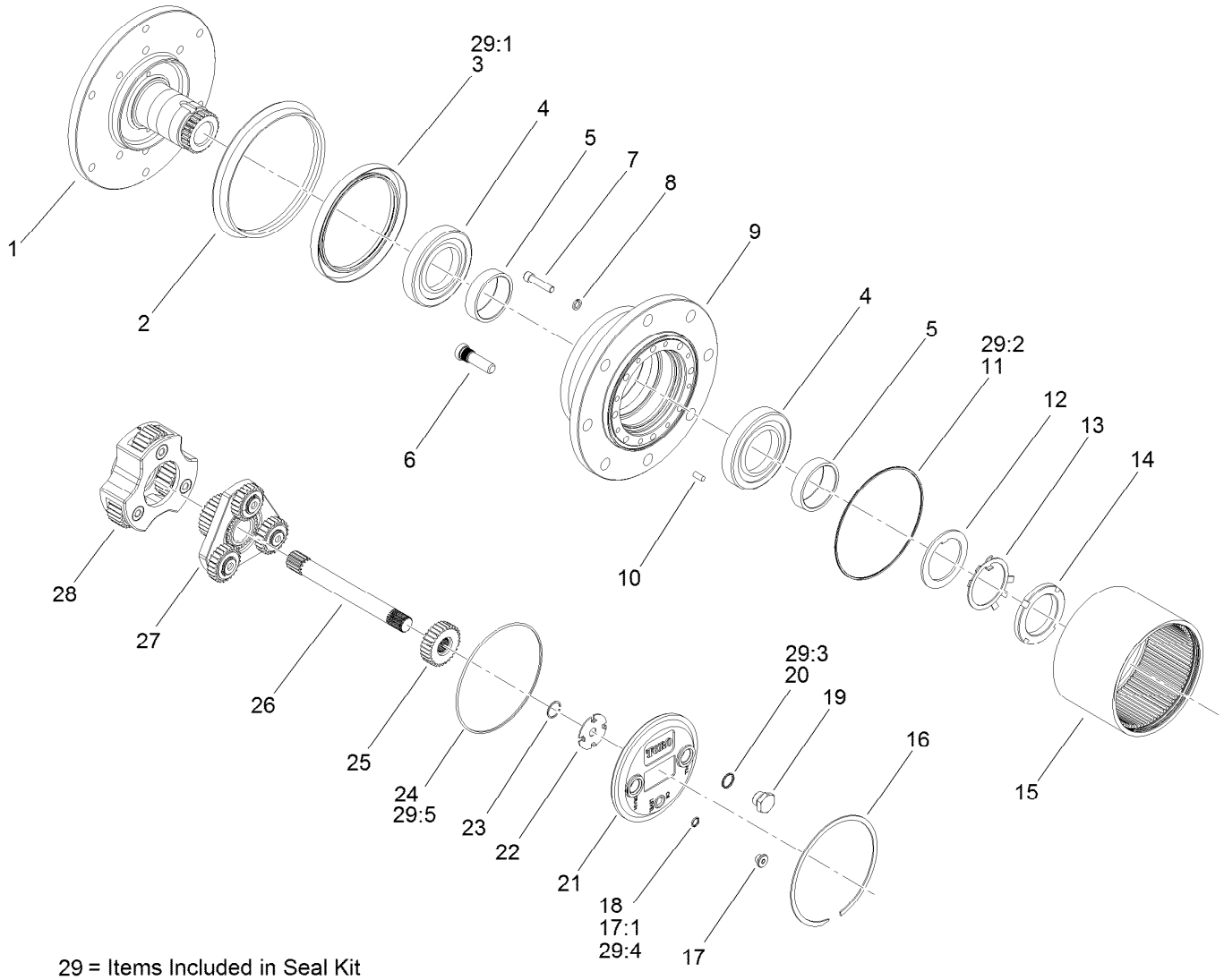

29 = Items Included in Seal Kit

Planetary Assembly No. 136-2913

Ref.	Part Number	Qty.	Description
1		1	Spindle ●
2	138-1204	1	Seal-Boot
3		1	Seal-Lip ●
4	138-1205	2	Bearing-Cup
5	138-1206	2	Bearing-Cone
6	105-8124	8	Stud-Wheel
7	138-1207	8	Screw-Socket Head
8	138-1208	8	Washer-Lock
9		1	Housing ●
10	105-8121	4	Pin-Dowel
11		1	O-Ring ●
12	138-6928	1	Spacer
13	138-6929	1	Washer
14	138-6930	1	Nut-Lock
15	138-1209	1	Gear-Ring
16	138-1210	1	Ring-Snap
17	353-990	1	Plug ASM
17:1	237-78	1	O-Ring

Ref.	Part Number	Qty.	Description
18	237-78	1	O-Ring
19	138-1211	2	Plug-Flange, Magnetic
20	138-1212	2	O-Ring
21	138-1213	1	Cap-End
22	138-1214	1	Washer-Thrust, Sun
23	105-8131	2	Ring-Retaining
24		1	O-Ring ●
25	138-1215	1	Gear-Primary, Sun
26	138-1216	1	Shaft-Drive
27	138-1217	1	Primary Carrier ASM
28	138-1218	1	Secondary Carrier ASM
29	138-1219	1	Seal Kit
29:1		1	Seal-Lip ●
29:2		1	O-Ring ●
29:3		1	O-Ring ●
29:4		1	O-Ring ●
29:5		1	O-Ring ●

● Not serviced separately

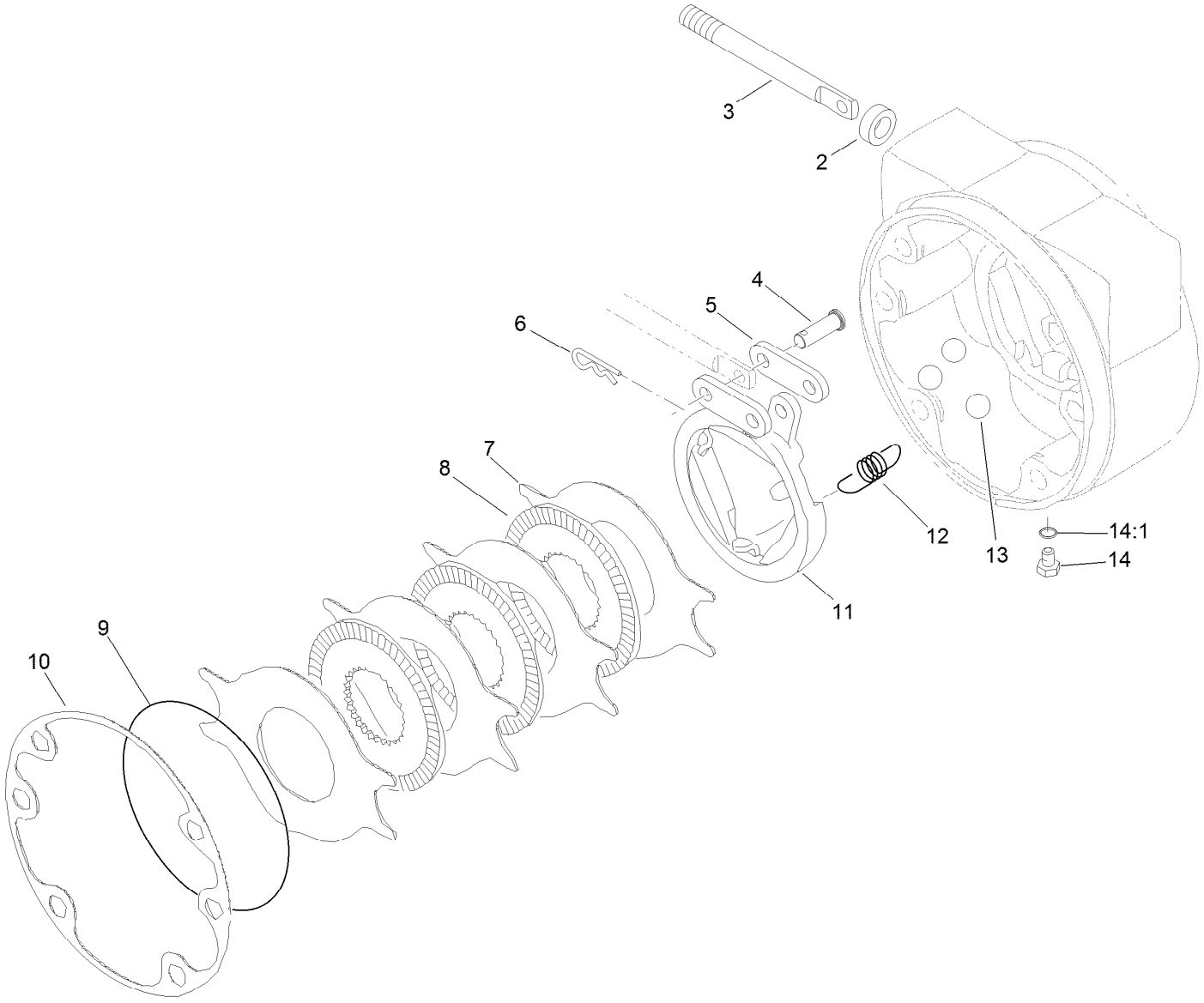

RH Brake Assembly No. 100-3069

Ref.	*Part Number*	*Qty.*	*Description*
2	93-7977	1	Seal
3	93-7978	1	Rod-Pull
4	93-7983	2	Pin-Clevis
5	93-7980	2	Link
6	93-7979	2	Pin-Hitch
7	93-7986	4	Disc-Stationary
8	104-4278	3	Disc-Rotating
9	93-7976	1	Ring-Retaining
10	93-7984	1	Gasket
11	104-4280	1	Actuator-Rotating
12	93-7987	3	Spring-Extension
13	93-7985	3	Ball
14	353-990	2	Plug ASM
14:1	237-78	1	O-Ring

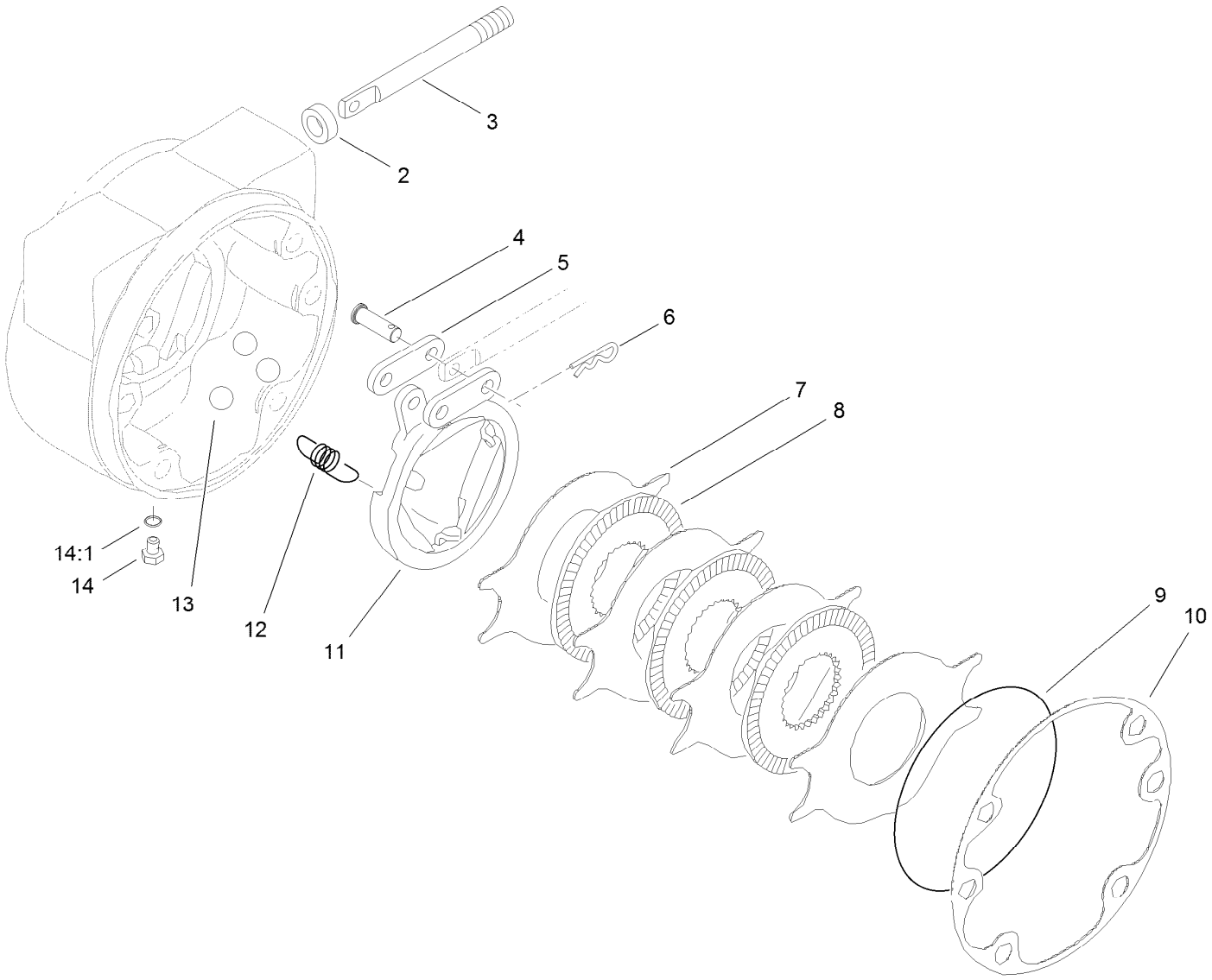

LH Brake Assembly No. 100-3070

Ref.	*Part Number*	*Qty.*	*Description*
2	93-7977	1	Seal
3	93-7978	1	Rod-Pull
4	93-7983	2	Pin-Clevis
5	93-7980	2	Link
6	93-7979	2	Pin-Hitch
7	93-7986	4	Disc-Stationary
8	104-4278	3	Disc-Rotating
9	93-7976	1	Ring-Retaining
10	93-7984	1	Gasket
11	104-4279	1	Actuator-Rotating
12	93-7987	3	Spring-Extension
13	93-7985	3	Ball
14	353-990	2	Plug ASM
14:1	237-78	1	O-Ring

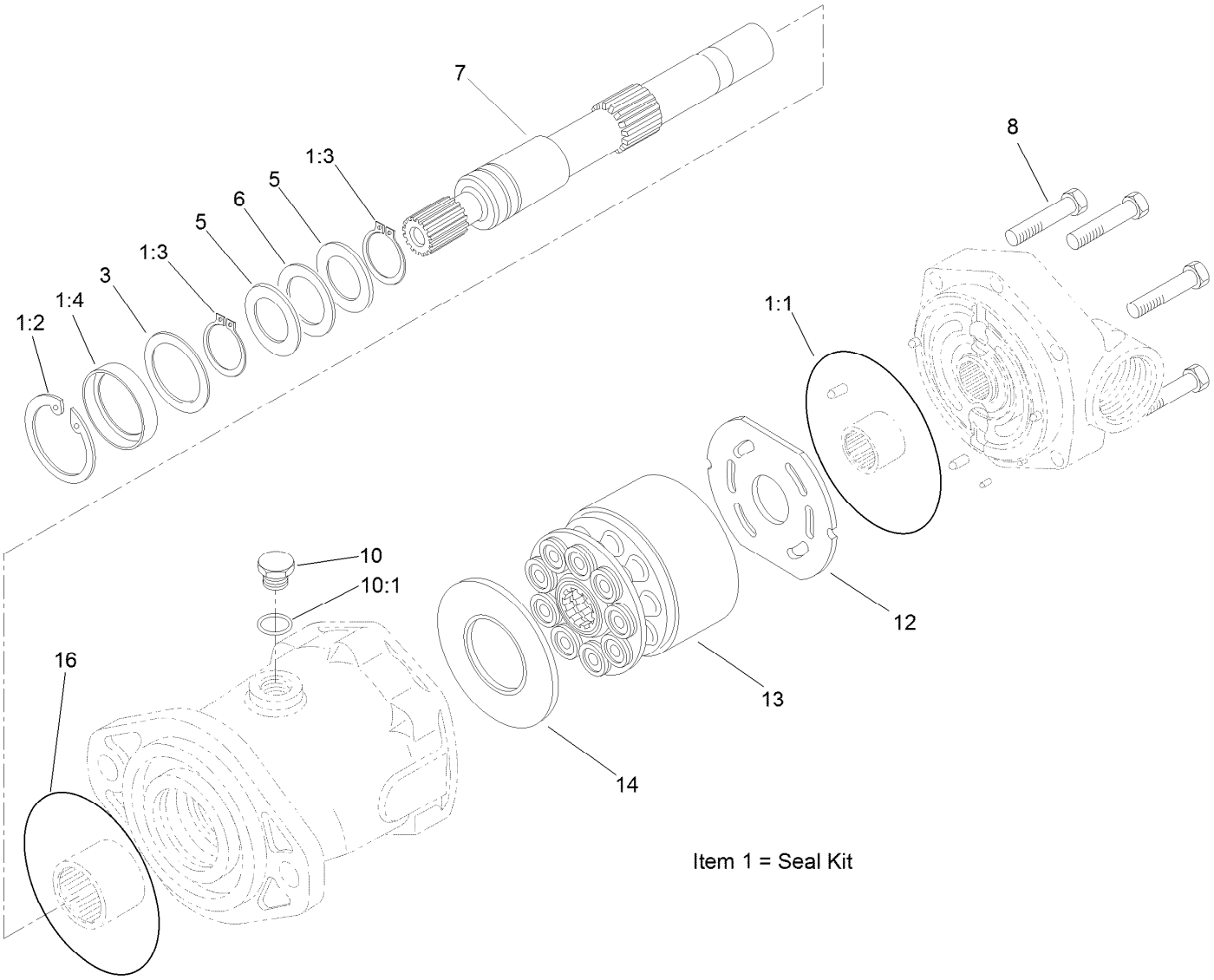

Hydraulic Motor Assembly No. 132-5631

Ref.	Part Number	Qty.	Description
1	106-6876	1	Seal Kit
1:1		1	O-Ring ●■
1:2	76-7010	1	Ring-Retaining ●
1:3	76-7000	2	Ring-Retaining ●
1:4		1	Seal-Shaft ●■
3	60-6240	1	Washer
5	76-6950	2	Race-Thrust
6	76-6960	1	Bearing-Thrust

Ref.	Part Number	Qty.	Description
7	94-3004	1	Shaft-Drive, Splined
8	94-3002	6	Screw-Cap
10	94-3009	1	Plug
10:1		1	O-Ring ■
12	94-3003	1	Plate-Valve
13	76-6910	1	Rotating Kit
14	76-6970	1	Insert-Plate, Cam
16	237-166	1	O-Ring

● Not illustrated

■ Not serviced separately

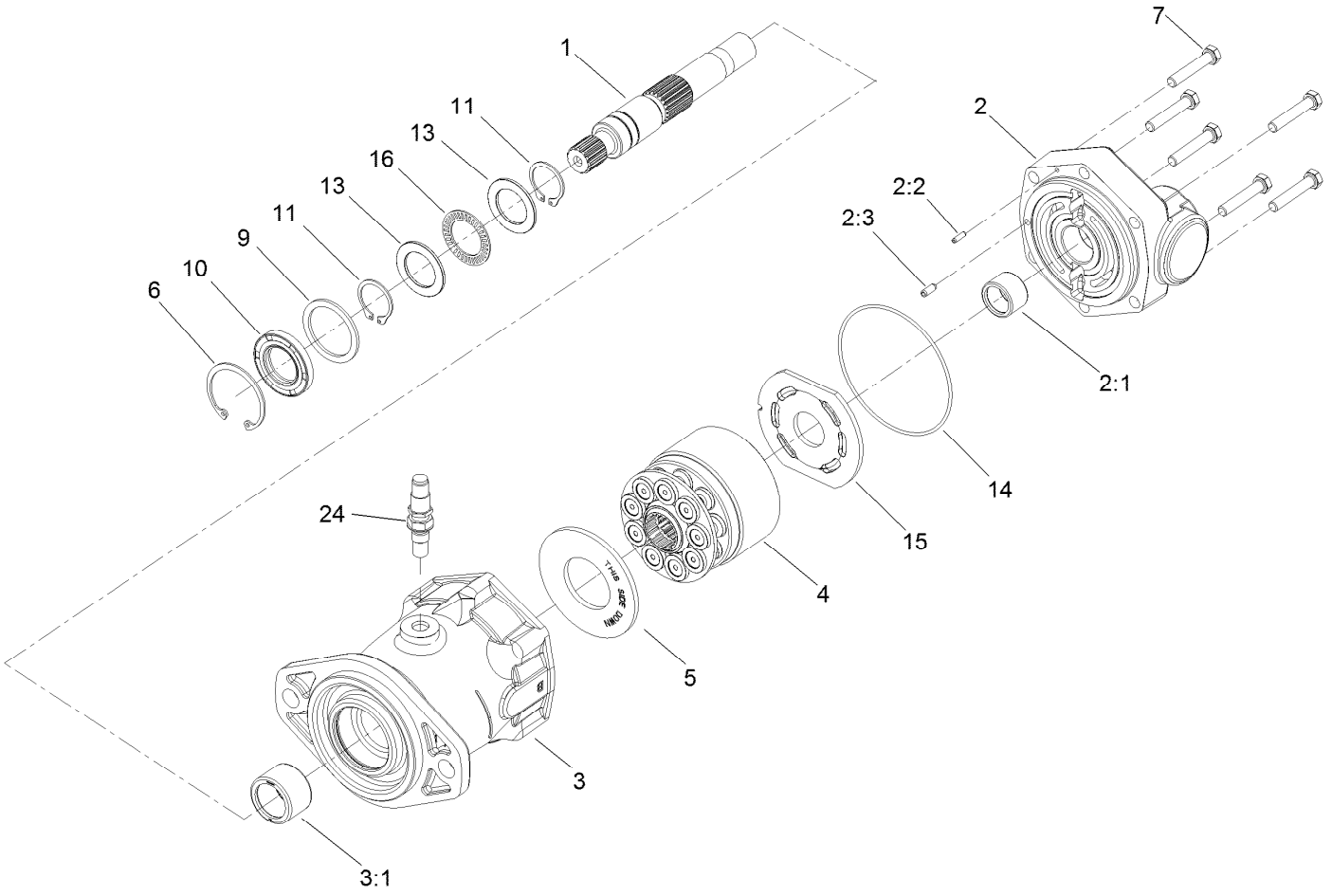

Hydraulic Motor Assembly No. 136-2373

Ref.	Part Number	Qty.	Description
1	94-3004	1	Shaft-Drive, Splined
2	136-2366	1	Backplate ASM
2:1	136-2367	1	Bearing
2:2	136-2369	1	Pin-Roll
2:3	136-2370	1	Pin-Roll
3	136-2365	1	Housing ASM
3:1	136-2368	1	Bearing
4	76-6910	1	Rotating Kit
5	76-6970	1	Insert-Plate, Cam
6	76-7010	1	Ring-Retaining
7	94-3002	6	Screw-Cap
9	60-6240	1	Washer

Ref.	Part Number	Qty.	Description
10	106-6876	1	Seal Kit
10:1		1	O-Ring ■ ●
10:2	76-7010	1	Ring-Retaining ●
10:3	76-7000	2	Ring-Retaining ●
10:4		1	Seal-Shaft ■ ●
11	76-7000	2	Ring-Retaining
13	76-6950	2	Race-Thrust
14	76-6980	1	O-Ring
15	94-3003	1	Plate-Valve
16	76-6960	1	Bearing-Thrust
24	136-2270	1	Sensor-Speed, Wheel

● Not illustrated

■ Not serviced separately

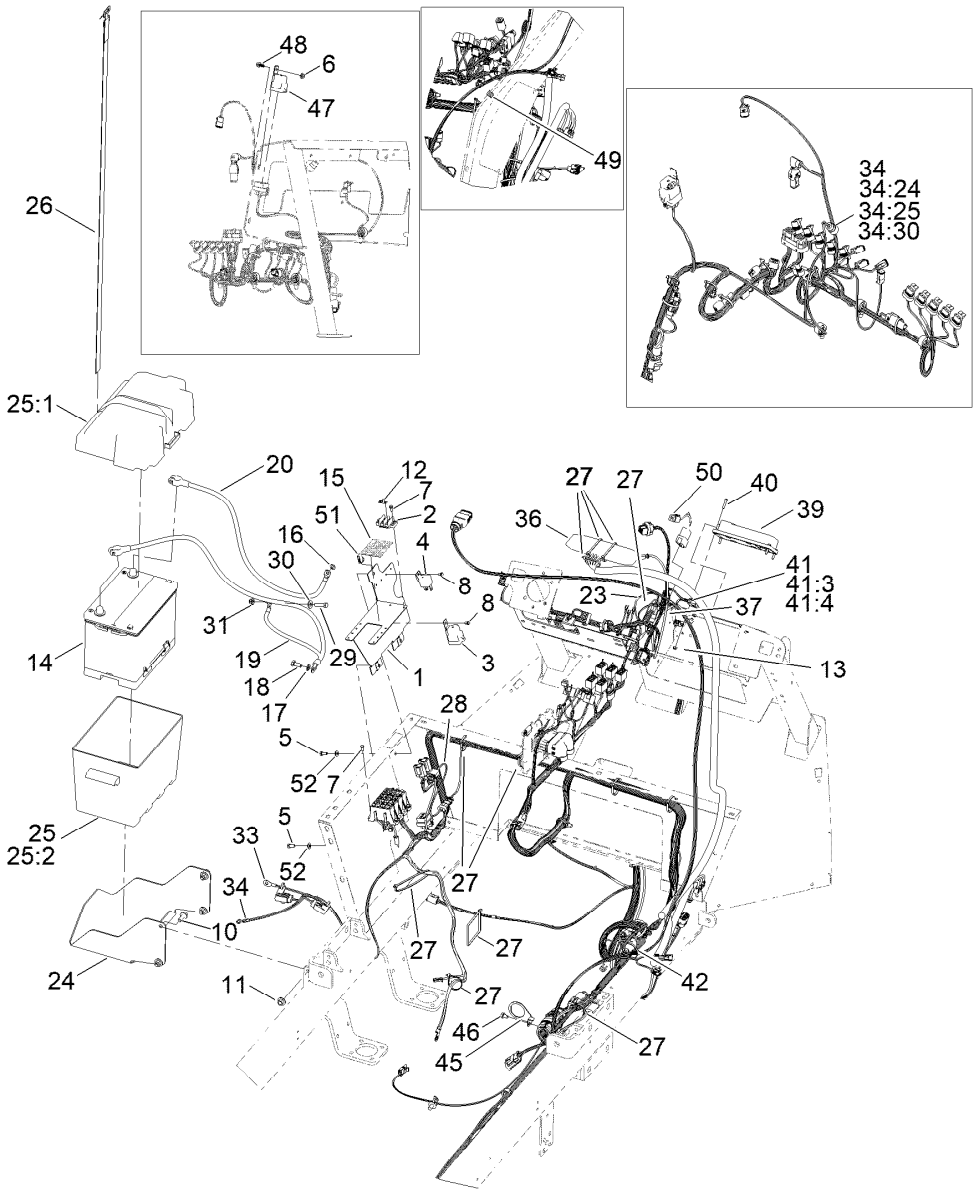

Electrical Assembly

Ref.	Part Number	Qty.	Description
1	163-7141-0P	1	Panel-Electrical
2	42862	1	Block-Terminal, Ground
3	99-7430	1	Relay-Mini
4	99-7435	1	Relay
5	321-3	3	Screw-HH
6	104-7201	1	Nut-HF, NI
7	32144-1	6	Screw-Taptite
8	104-2065	2	Screw-HWH
10	3234-11	4	Screw-HHF
11	32128-43	4	Nut-Flange
12	42863	1	Strip-Jumper
13	3296-2	4	Nut-Lock, NI
14	106-5190	1	Battery, 660 CCA W/O Electrolyte
15	163-2971	1	Decal-Fuse, Mp5800 Geolink
16	3255-8	1	Washer-Lock
17	48-9590	1	Washer-Lock
18	63-7790	1	Screw-Cap
19	105-0115	1	Cable-Battery, Negative
20	105-0114	1	Cable-Battery, Positive

Ref.	Part Number	Qty.	Description
23	122-0695	1	Harness-Wire, Auto/MAN
24	119-5049-03	1	Bracket-Battery
25	93-7595	1	Battery Box ASM
25:1	105-2914	1	Top-Battery Box
25:2	105-2915	1	Bottom-Battery Box
26	3339-175	1	Strapping-Web
27	3290-379	12	Tie-Cable
28	108-8657	1	Harness-Wire, Seat
29	322-6	1	Screw-HH
30	3256-3	1	Washer-Flat
31	119-4041	1	Nut-HF
33	122-3653	1	Harness-Wire, Front
34	122-3655	1	Harness-Wire, Mp5800 Rear, Geolink
34:24	32180-043	1	Resistor-120 Ohm
34:25	100-4918	4	Diode
34:30	32180-089	1	Cap-Plug, 3 Way
36	139-6148	1	Antenna ASM, CI55
37	147-3180	1	Harness-Xd To Modem, CI55
39	161-9001	1	Gateway-Telematics

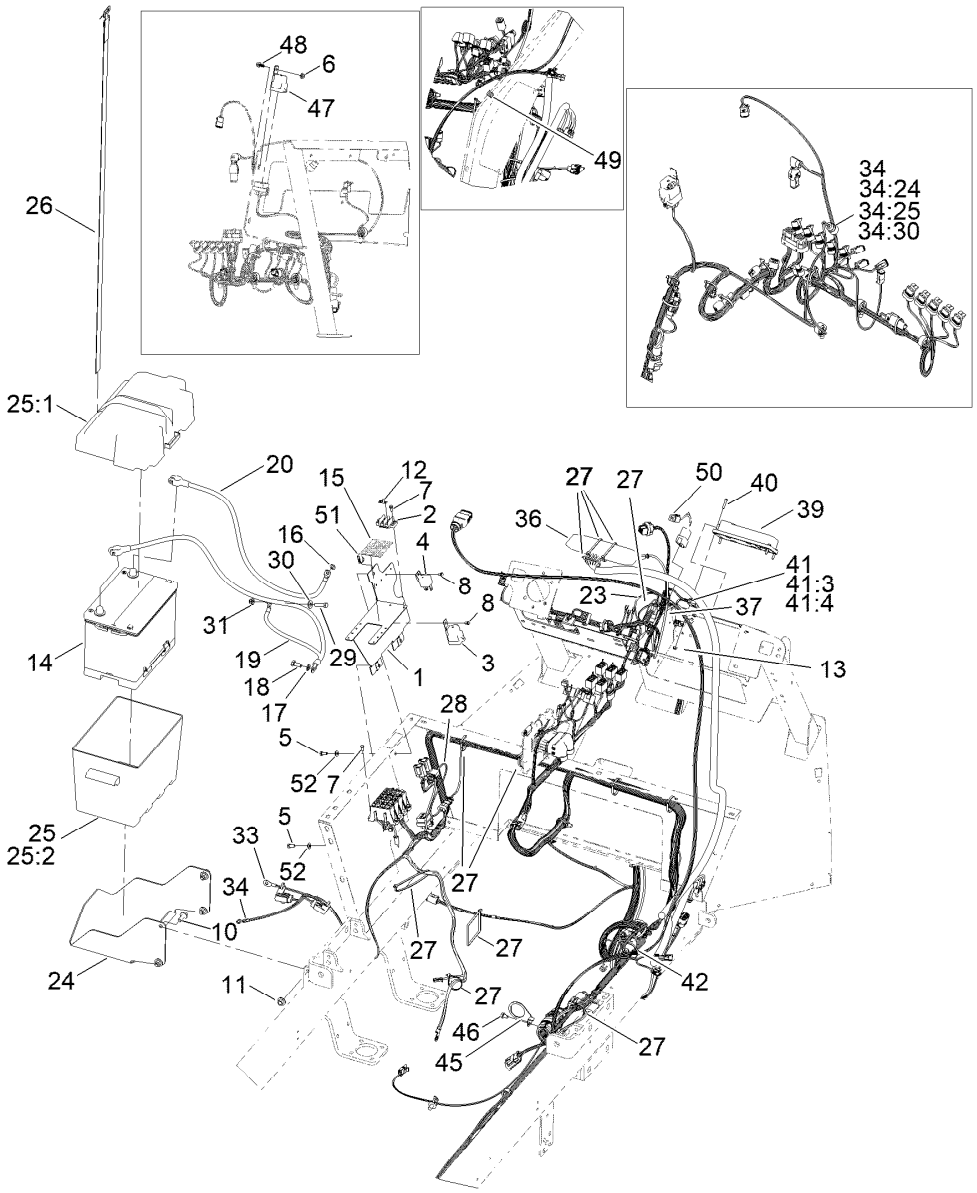

Electrical Assembly (continued)

Ref.	Part Number	Qty.	Description
40	131-6456	4	Screw-HWH
41	122-2163	1	Harness-Wire
41:3	121-8861	1	Fuse-Mini Blade, 2 Amp
41:4	32180-101	1	Cover-Fuse, Single
42	3290-378	3	Tie-Cable
45	163-2924-03	1	Mount-Connector
46	32104-82	1	Screw-HHF
47	99-7430	1	Relay-Mini

Ref.	Part Number	Qty.	Description
48	99-6810	1	Screw-HHF
49	32180-119	1	Clip-Edge, W/Tie, Side Mount
50	122-4266	1	Harness-Wire, Jumper Dt-6S To Dt-12P
51	107069	3	Clip
52	120-9679	3	Washer-Flat

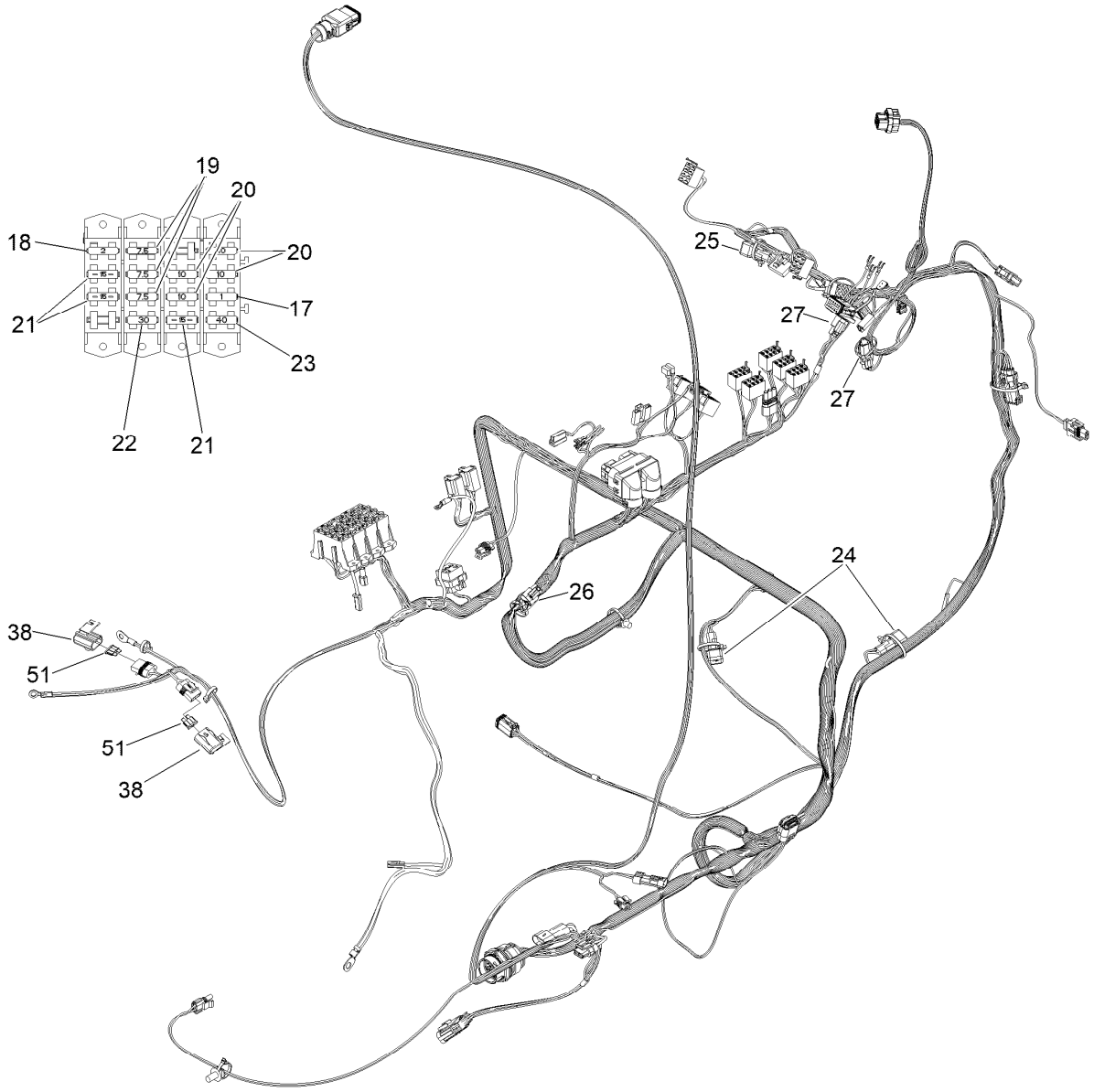

Wire Harness Assembly No. 122-3653

Ref.	*Part Number*	*Qty.*	*Description*
17	104-9055	1	Fuse-Blade, 1 Amp
18	94-6710	1	Fuse-2 Amp
19	114241	3	Fuse-Blade, 7.5 Amp
20	218-578	5	Fuse-Blade, 10 Amp
21	109355	3	Fuse-Blade, 15 Amp
22	109103	1	Fuse-Blade, 30 Amp
23	99-6124	1	Fuse-40 Amp
24	100-4918	2	Diode
25	104-4022	1	Resistor-75 Ohm
26	32180-089	1	Cap-Plug, 3 Way
27	32180-043	2	Resistor-120 Ohm
38	32180-019	2	Cover-Fuse, Single
51	109101	1	Fuse-Blade, 20 Amp

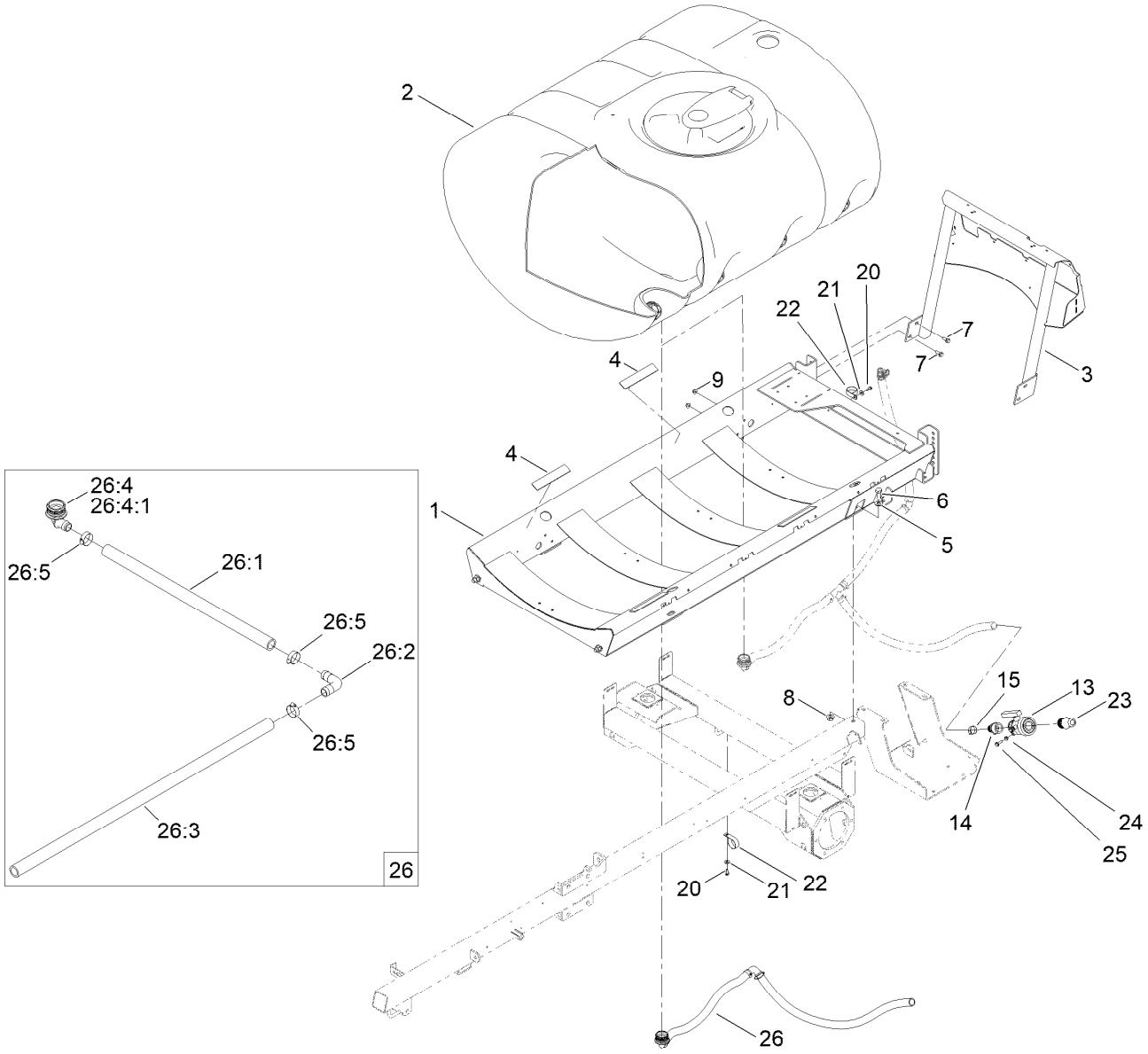

Tank and Saddle Assembly

Ref.	Part Number	Qty.	Description
1	130-7092-03	1	Saddle-Tank
2	117-8005	1	Tank ASM
3	147-4669-03	1	Mount-Vavle
4	104-7102	4	Pad-Battery
5	3256-27	4	Washer-Flat
6	327-4	4	Screw-HH
7	3234-11	4	Screw-HHF
8	32128-50	4	Nut-Flange
9	119-4042	4	Nut-HF, NI
13	108-0069	1	Valve-Ball
14	110-5224	1	Fitting-Barbed, Straight
15	2412-34	1	Clamp-Hose
20	9264964	1	Screw-HWH, Thread Cut
21	3256-3	1	Washer-Flat
22	2412-147	1	Clamp-R
23	132-7787	1	Coupler-Quick
24	32128-26	2	Nut-HF
25	3234-29	2	Screw-HHF
26	161-4149	1	Hose-ASM, Drain
26:1	131-5775	1	Hose-Drain
26:2	117-7867	1	Elbow-Hosebarb
26:3	131-5777	1	Hose-Drain
26:4	106-4933	1	Hosebarb ASM
26:4:1	100-8637	1	O-Ring
26:5	2412-34	3	Clamp-Hose

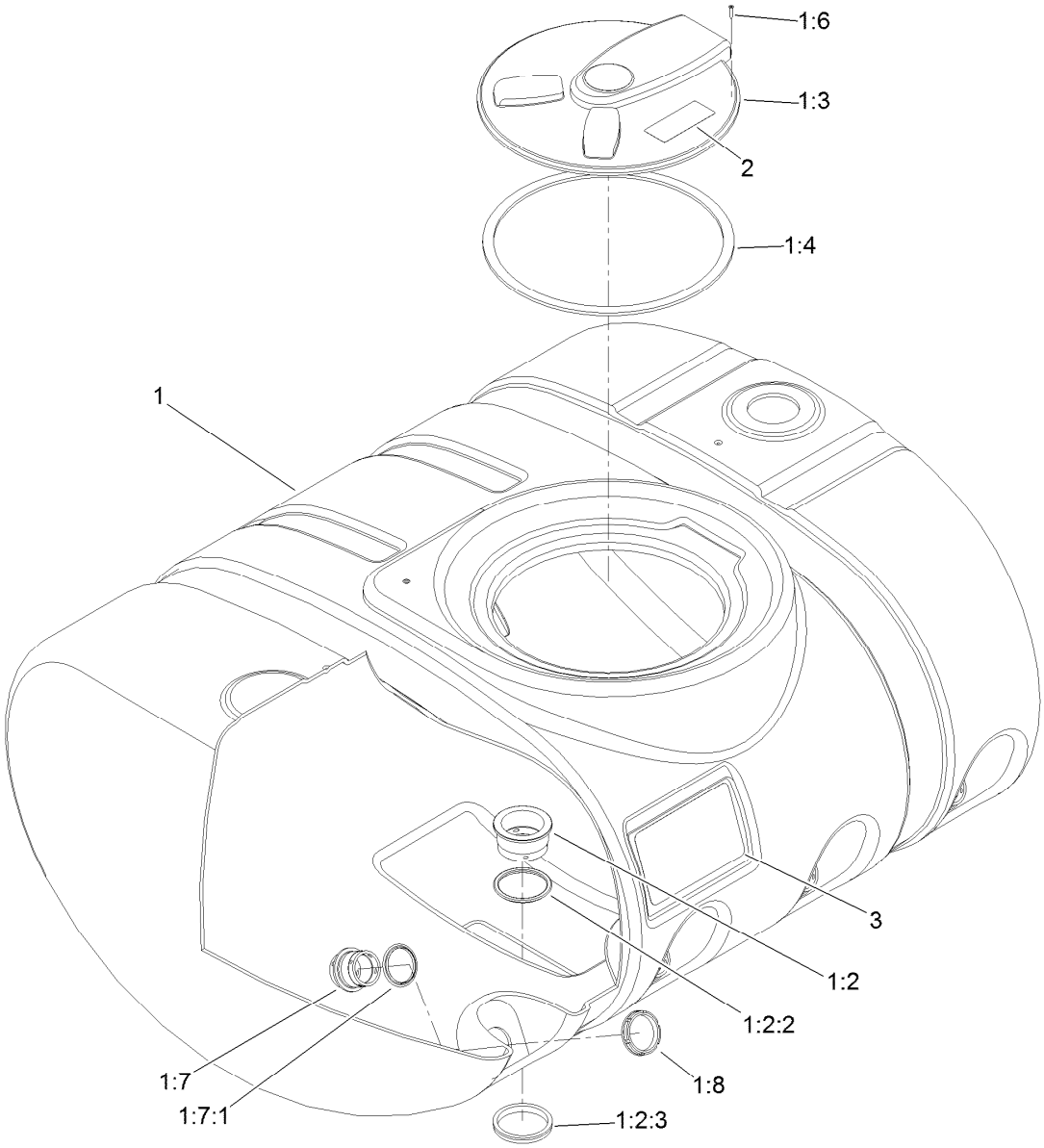

Tank Assembly No. 117-8005

Ref.	*Part Number*	*Qty.*	*Description*
1		1	Tank ASM ●
1:2	117-7851	1	Bulkhead ASM
1:2:2	100-8646	1	Gasket-Bulkhead
1:2:3	100-8647	1	Nut-Bulkhead
1:3	138-6283	1	Lid ASM - Sprayer Tank
1:4	119-9378	1	Gasket-Lid, Tank
1:6	107-8635	8	Screw-PFH
1:7	108-3358	4	Fitting-Bulkhead
1:7:1	107-2864	1	Gasket-Bulkhead
1:8	100-7051	4	Nut-Bulkhead
2	120-0622	1	Decal-Warning
3	119-5042	2	Decal-Tank

● Not serviced separately

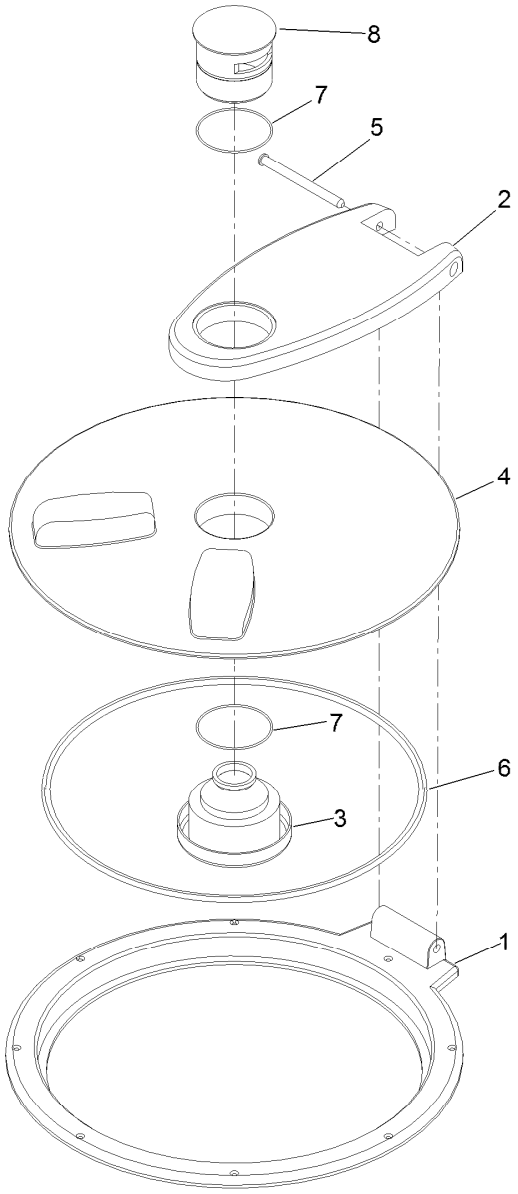

Spray Tank Lid Assembly No. 138-6283

Ref.	*Part Number*	*Qty.*	*Description*
1	119-9381	1	Ring-Lid
2	119-9382	1	Arm-Lid
3	119-9383	1	Vent-Lid
4	119-9384	1	Cover-Lid
5	119-9385	1	Pin-Pivot
6	138-6281	1	Seal - Tank Lid
7	119-9386	2	O-Ring
8	119-9387	1	Cap-Lid

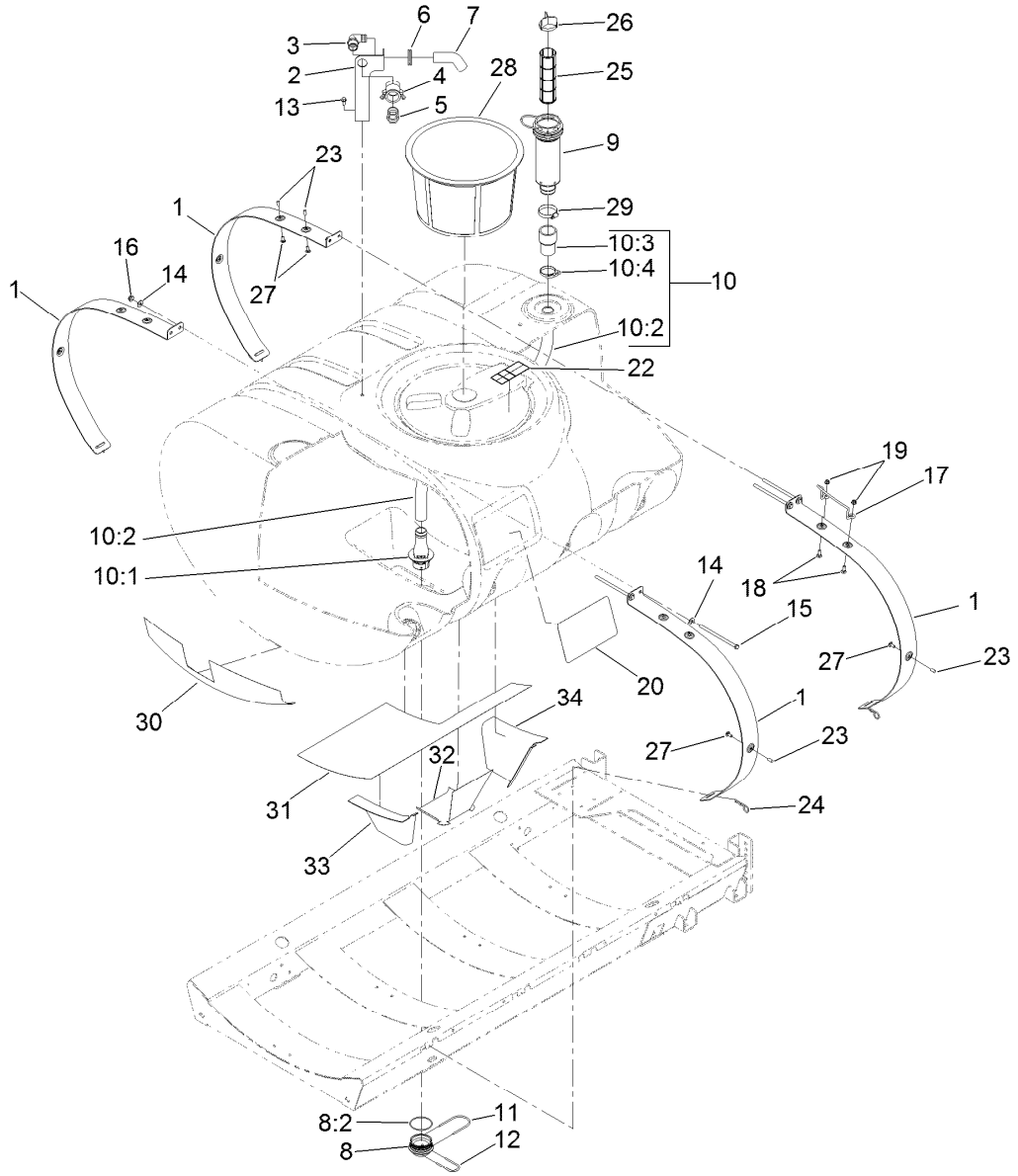

Tank Mounting and Filter Assembly

Ref.	Part Number	Qty.	Description
1	117-8029-03	4	Band-Tank
2	110-5082-03	1	Bracket-Anti Siphon
3	41140	1	Elbow
4	100-6779	1	Coupling-Female
5	41316	1	Adapter-Quick
6	110-5090	1	Grommet
7	110-5088	1	Hose-Fill
8	117-7928	1	Adapter ASM
8:2	100-6989	1	O-Ring
9	130-7096	1	Filter ASM
10	121-5003	1	Suction Tube ASM
10:1	121-5008	1	Foot-Suction
10:2	121-5030	1	Tube-Suction
10:3	121-5031	1	Connector-Suction
10:4	121-5047	1	Clamp-Nylon
11	117-7996	1	Fork
12	100-8635	1	Fork
13	3234-5	1	Screw-HHF
14	3256-4	8	Washer-Flat
15	120-0649	4	Bolt-TAP HH
16	119-4042	4	Nut-HF, NI

Ref.	Part Number	Qty.	Description
17	119-5019	1	Stop-Lid
18	3230-2	2	Bolt-CARR
19	119-4041	2	Nut-HF
20	131-3316	2	Decal-Tank
22	120-0622	1	Decal-Warning
23	42452	5	Cap-Protective
24	3290-343	4	Pin-Hair
25	100-6991	1	Element-Filter, Green
25	100-6992	1	Element-Filter, Red
25	100-8642	1	Screen-Suction
26	100-8641	1	Vane-Screen
27	3230-1	5	Bolt-CARR
28	119-9419	1	Basket-Filter
29	2412-130	1	Clamp-Hose
30	130-7139	1	Shield-Heat Tape, Front
31	130-7140	1	Shield-Heat Tape, Bottom
32	130-7141	1	Shield-Heat Tape, Sump
33	131-3298	1	Shield-Heat Tape, Sump, Front
34	131-3299	1	Shield-Heat Tape, Sump, Rear

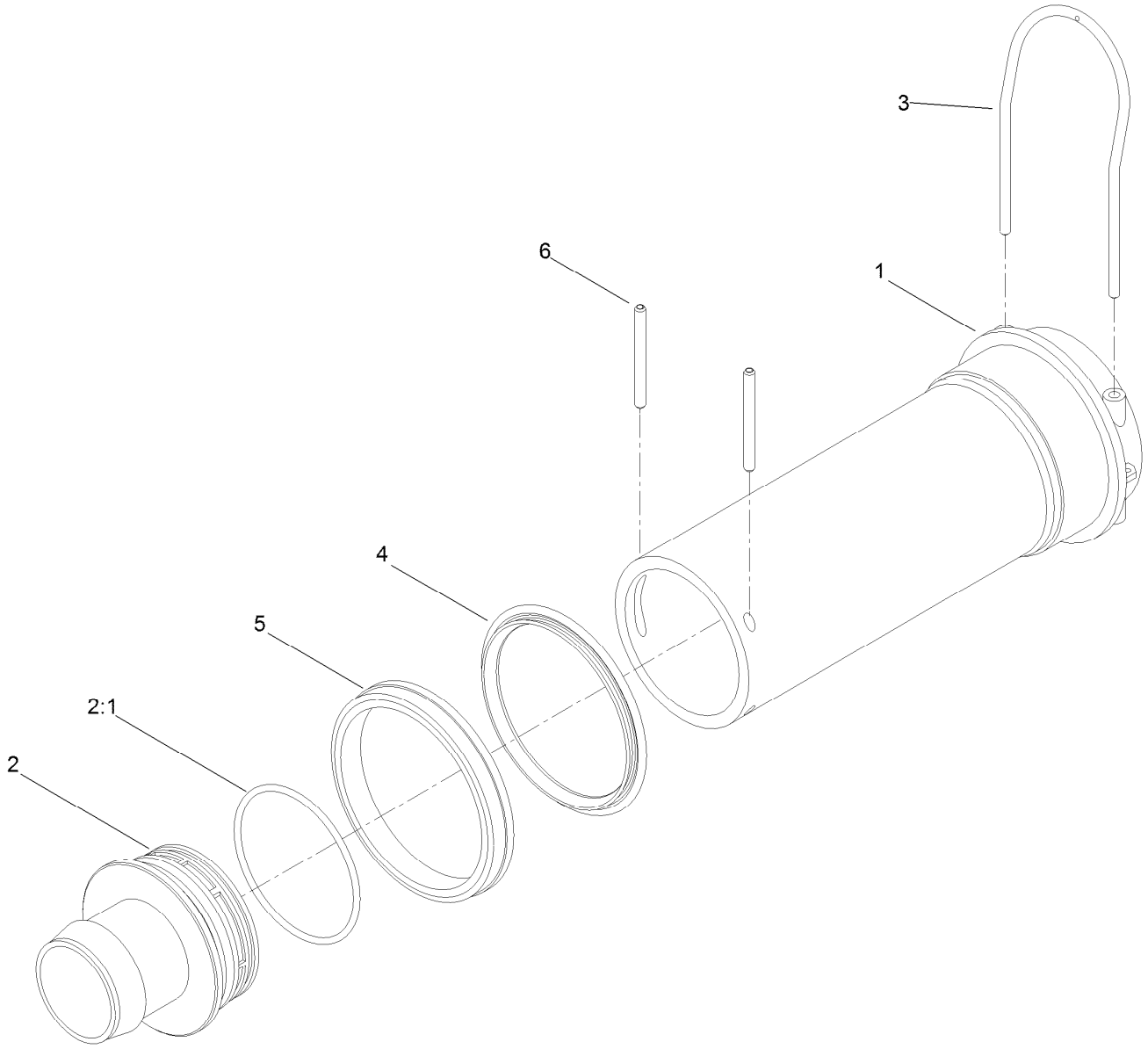

Filter Assembly No. 130-7096

Ref.	*Part Number*	*Qty.*	*Description*
1	100-8643	1	Housing-Filter
2	106-4942	1	Hosebarb-Straight
2:1	100-6989	1	O-Ring
3	100-8636	1	Fork-Special
4	100-8646	1	Gasket-Bulkhead
5	100-8647	1	Nut-Bulkhead
6	100-8644	2	Pin-Expansion

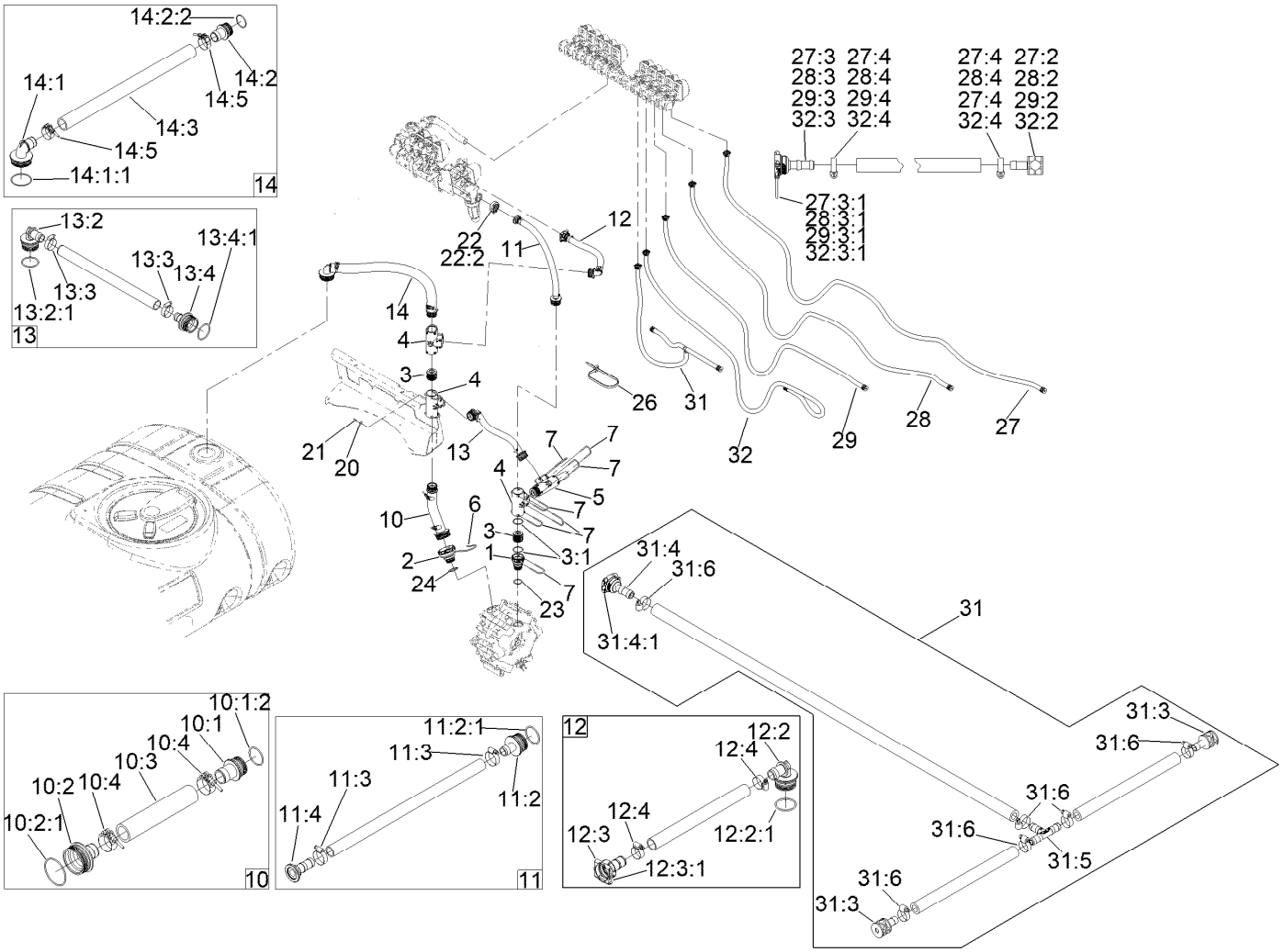

Spray System Hose Assembly

Ref.	Part Number	Qty.	Description
1	133-2881	1	Fitting
2	133-2883	1	Fitting
3	106-4947	2	Connector
3:1	100-8637	2	O-Ring
4	100-6704	3	Tee
5	117-7874	1	Relief Valve ASM
6	117-7996	1	Fork
7	100-8635	13	Fork
10	130-7128	1	Lower Suction Hose ASM
10:1	117-7982	1	Hosebarb ASM
10:1:2	100-8637	1	O-Ring
10:2	117-7965	1	Hosebarb ASM
10:2:1	100-6989	1	O-Ring
10:3	127-8982	1	Hose-Suction, Lower
10:4	130-7125	2	Clamp, T-Bolt
11	132-4295	1	Supply Hose ASM
11:2	106-4932	1	Hosebarb-Straight
11:2:1	100-8637	1	O-Ring
11:3	2412-3	2	Clamp-Hose
11:4	127-1142	1	Fitting-STR

Ref.	Part Number	Qty.	Description
12	161-4166	1	Hose ASM,Agitation Bypass Mp5800
12:2	106-4933	1	Hosebarb ASM
12:2:1	100-8637	1	O-Ring
12:3	161-4117	1	Kit-Fitting, Qf 1" Barb Female
12:3:1	147-3186	1	Pin-Fork, Qf Large
12:4	2412-129	2	Clamp-Hose
13	117-7963	1	Pressure Relief Hose ASM
13:2	106-4933	2	Hosebarb ASM
13:2:1	100-8637	1	O-Ring
13:3	2412-3	2	Clamp-Hose
13:4	106-4932	1	Hosebarb-Straight
13:4:1	100-8637	1	O-Ring
14	130-7127	1	Upper Suction Hose ASM
14:1	106-4952	1	Hosebarb-90 DEG
14:1:1	100-6989	1	O-Ring
14:2	117-7982	1	Hosebarb ASM
14:2:2	100-8637	1	O-Ring
14:3	127-8981	1	Hose-Suction, Upper
14:5	130-7125	2	Clamp, T-Bolt

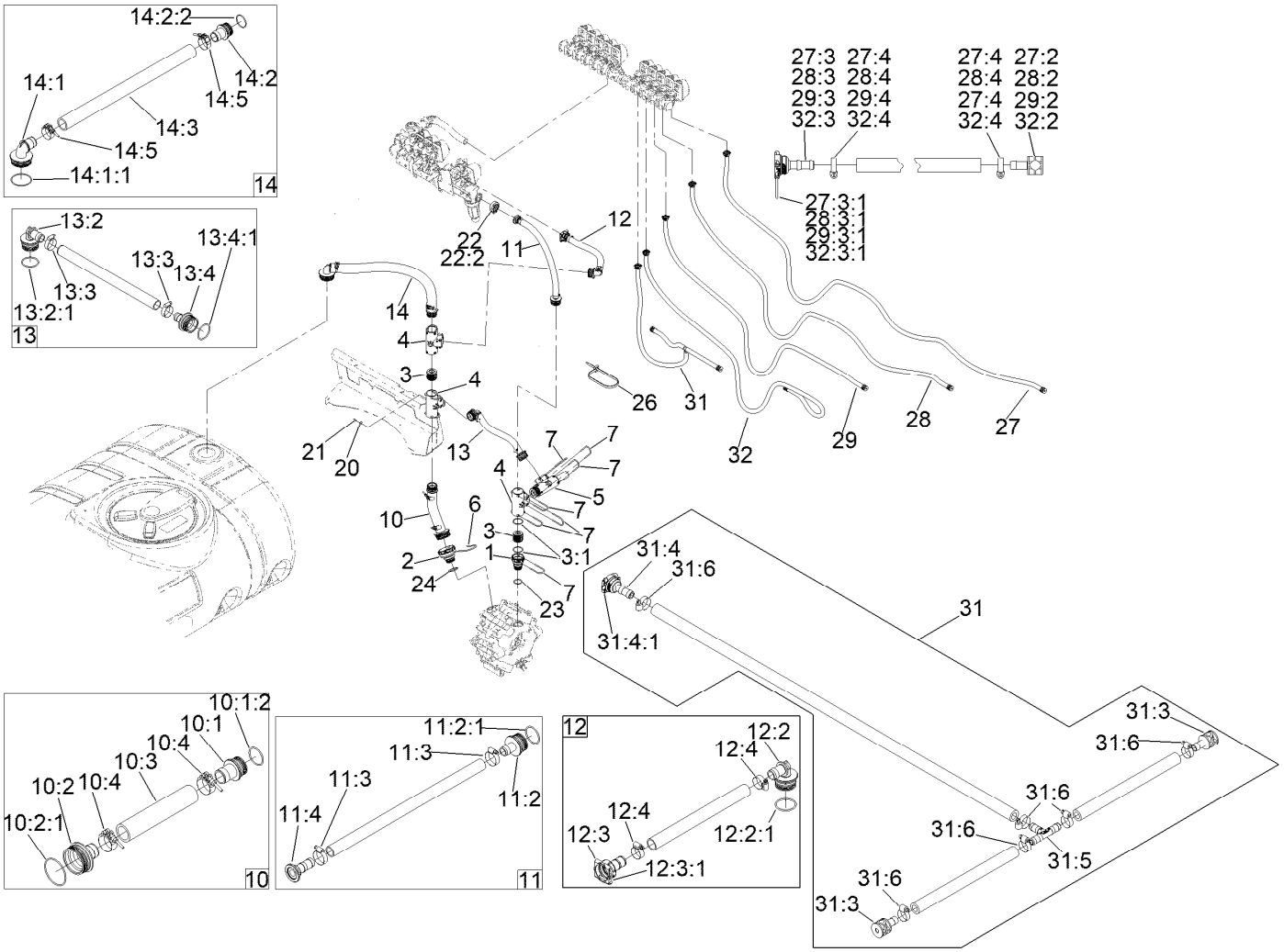

Spray System Hose Assembly (continued)

Ref.	Part Number	Qty.	Description
20	3256-61	2	Washer-Flat
21	32144-32	2	Screw-PPH
22	127-9829	2	Clamp/Gasket Kit
22:2	127-1145	1	Gasket-Flange
23	133-2882	1	O-Ring
24	133-2884	1	O-Ring
26	3290-378	8	Tie-Cable
27	131-7288	2	Hose Nozzle ASM
27:2	130-7265	1	Shank-Nozzle, Single
27:3	139-3088	1	Kit-Fitting, Qc 1/2" STR Barb
27:3:1	133-0398	1	Pin-Fork
27:4	2412-36	2	Clamp-Hose
28	131-7289	2	Hose Nozzle ASM
28:2	130-7265	1	Shank-Nozzle, Single
28:3	139-3088	1	Kit-Fitting, Qc 1/2" STR Barb
28:3:1	133-0398	1	Pin-Fork
28:4	2412-36	2	Clamp-Hose

Ref.	Part Number	Qty.	Description
29	131-7290	2	Hose Nozzle ASM
29:2	130-7265	1	Shank-Nozzle, Single
29:3	139-3088	1	Kit-Fitting, Qc 1/2" STR Barb
29:3:1	133-0398	1	Pin-Fork
29:4	2412-36	2	Clamp-Hose
31	131-7292	2	Hose Nozzle ASM
31:3	130-7265	2	Shank-Nozzle, Single
31:4	139-3088	1	Kit-Fitting, Qc 1/2" STR Barb
31:4:1	133-0398	1	Pin-Fork
31:5	131-3736	1	Fitting-Tee, Barb
31:6	2412-36	6	Clamp-Hose
32	163-2955	2	Hose ASM, Nozzle
32:2	130-7265	1	Shank-Nozzle, Single
32:3	139-3088	1	Kit-Fitting, Qc 1/2" STR Barb
32:3:1	133-0398	1	Pin-Fork
32:4	2412-36	2	Clamp-Hose

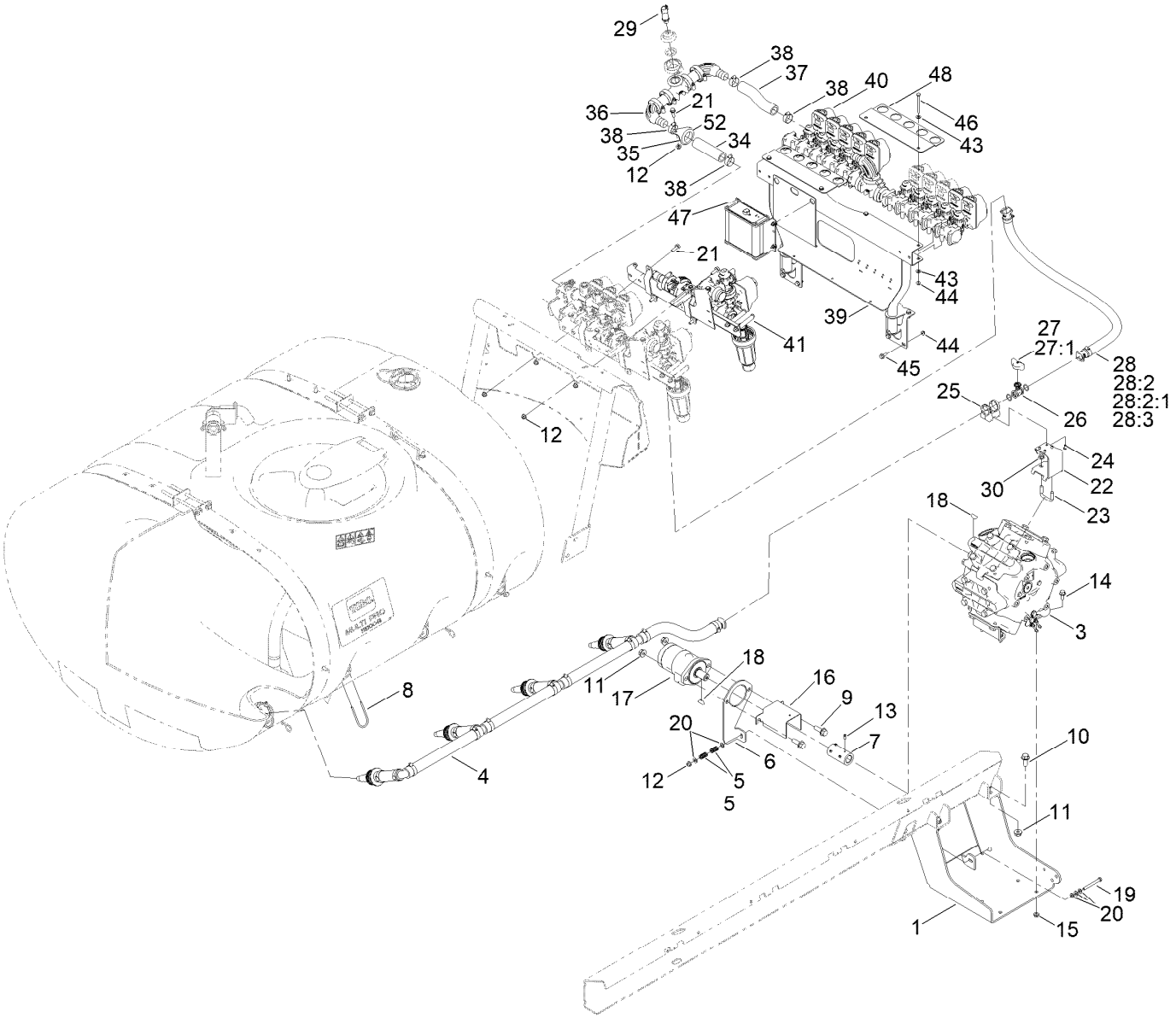

Spray Pump and Valve Assembly

Ref.	Part Number	Qty.	Description
1	117-0655-03	1	Bracket-Pump
3	145-3382	1	Pump ASM
4	139-3093	1	Agitation Hose ASM
5	110-5331	2	Spring-Compression
6	117-8040-03	1	Plate-Mount, Motor
7	117-8045	1	Coupler
8	100-8635	4	Fork
9	100-6116	2	Screw-HHF
10	110-5057	4	Capscrew-HHF
11	139-1689	6	Nut-HF
12	119-4041	6	Nut-HF
13	3241-7	4	Screw-Set,Sqhd
14	3234-11	4	Screw-HHF
15	3290-357	4	Nut-HSF
16	120-0628-03	1	Guard-Shaft, Pump
17	117-0706	1	HYD Motor ASM
18	106-1990	1	Key-Woodruff
19	322-14	1	Screw-HH
20	3256-23	5	Washer-Plain
21	3234-29	5	Screw-HHF
22	136-0376-03	1	Bracket-Valve, Agitation

Ref.	Part Number	Qty.	Description
23	107-3073	1	U-Bolt
24	33113-012	4	Screw-HH
25	132-4302	1	Mount-Valve
26	131-0249	1	On/Off 2-Way Valve Kit
27	131-0264	1	Agitation Throttling Handle Kit
27:1	131-0263	1	Screw-Handle
28	132-4310	1	Agiation Supply Hose ASM
28:2	127-9806	2	Fitting Kit
28:2:1	133-0398	1	Pin-Fork
28:3	2412-34	2	Clamp-Hose
29	130-8202	1	Transducer-Pressure
30	119-4042	2	Nut-HF, NI
34	119-0441	1	Hose-Agitaiton
35	163-2923-03	1	Holder-Hose
36	161-4139	1	Manifold-Connection ASM
37	125-0665	1	Nozzle-Hose, Agitation
38	2412-3	4	Clamp-Hose
39	147-4683-03	1	Mount-Valve, GPS [black]
40	147-4679	1	Manifold ASM-Geolink, Mp5800

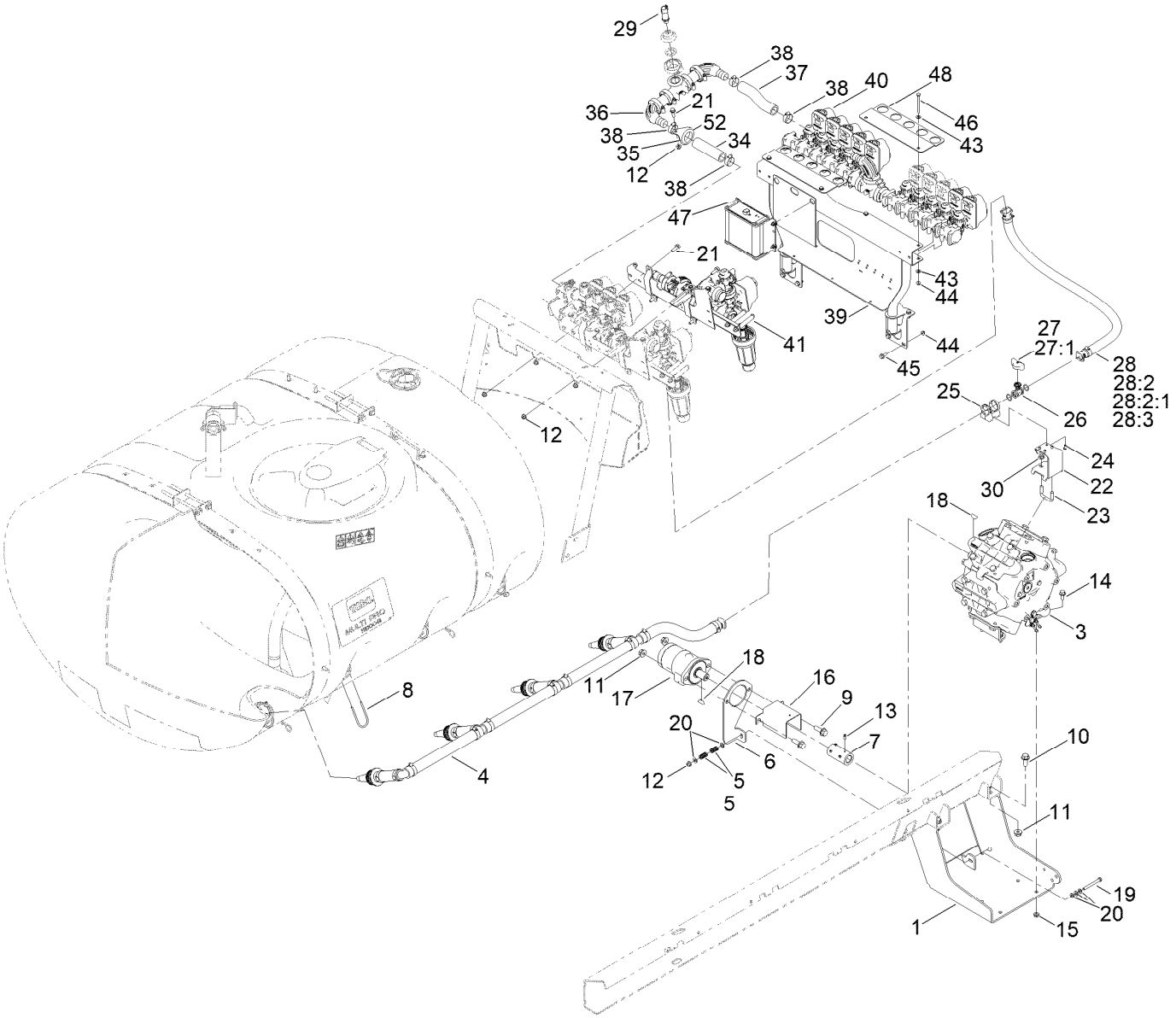

Spray Pump and Valve Assembly (continued)

Ref.	Part Number	Qty.	Description
41	161-4133	1	Agitation ASM-Geolink, Mp5800
43	3256-22	8	Washer-Flat
44	104-7201	12	Nut-HF, NI
45	3234-47	8	Screw-HHF
46	321-23	4	Screw-HH
47	161-4168	1	Asc-10, Mounting ASM
48	161-4185-03	2	Bracket-Bypass
52	110-5090	1	Grommet

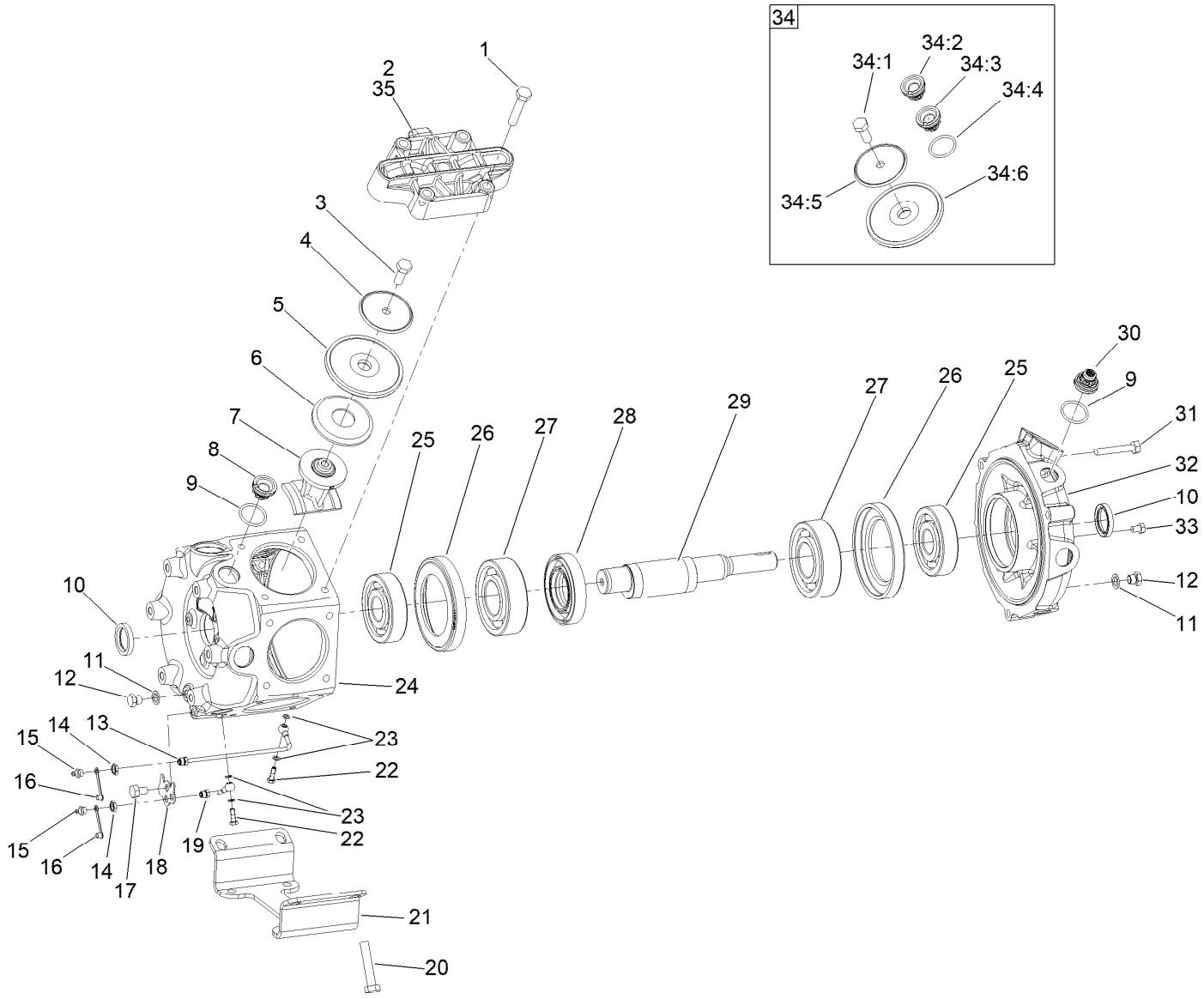

Pump Assembly No. 145-3382

Ref.	Part Number	Qty.	Description
1	120-0773	20	Bolt-Hex
2		6	Cover-Pump ●
3	120-0777	6	Bolt-Hex
4	120-0778	6	Disc-Diaphragm
5	120-0779	6	Diaphragm
6	120-0780	6	Disc-Backing, Diaphragm
7	120-0781	6	Rod-Connecting
8	99-0861	10	Valve-Pump
9	100-6651	12	O-Ring
10	120-0783	2	Seal-Oil
11	120-0786	2	Seal
12	120-0785	2	Plug
13	133-2877	1	Tube-Banjo, Long
14	133-2878	2	Nut
15	133-2879	2	Nipple-Grease
16	133-2880	2	Cap-Grease Nipple, Yellow
17	136-2252	1	Bolt-Hex
18	133-2875	1	Plate-Nipple, Grease
19	133-2876	1	Tube-Banjo, Short
20	120-0774	4	Bolt-Hex
21	120-0787	1	Foot-Pump
22	133-2830	2	Bolt-Banjo
23	136-2251	4	Gasket
24	133-2821	1	Housing-Pump, Main
25	120-0788	2	Bearing-Ball
26	133-2820	2	Spacer-Metal
27	120-0791	2	Bearing-Ball
28	133-2827	1	Distance Ring
29	133-2825	1	Shaft-Crank
30	120-0793	2	Valve W/Hole
31	120-0794	3	Bolt-Hex
32	133-2822	1	Housing-Pump, Front
33	120-0784	4	Bolt-Hex
34	120-0796	1	Pump Kit
34:1	120-0777	6	Bolt-Hex
34:2	99-0861	10	Valve-Pump

● Not serviced separately

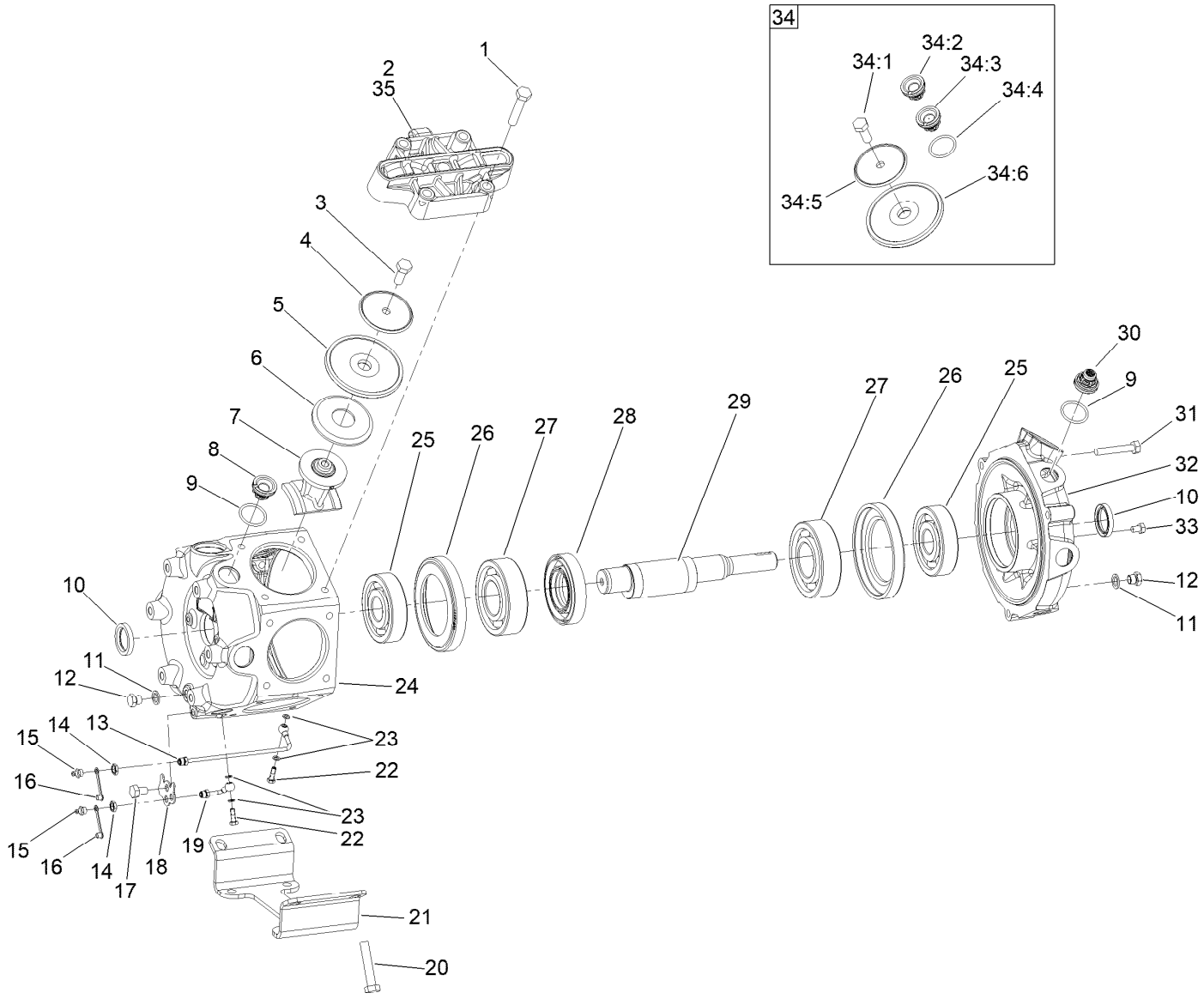

Pump Assembly No. 145-3382 (continued)

Ref.	Part Number	Qty.	Description
34:3	120-0793	2	Valve W/Hole
34:4	100-6651	12	O-Ring
34:5	120-0778	6	Disc-Diaphragm
34:6	120-0779	6	Diaphragm
35	145-3399	1	Pump Head Kit

● Not serviced separately

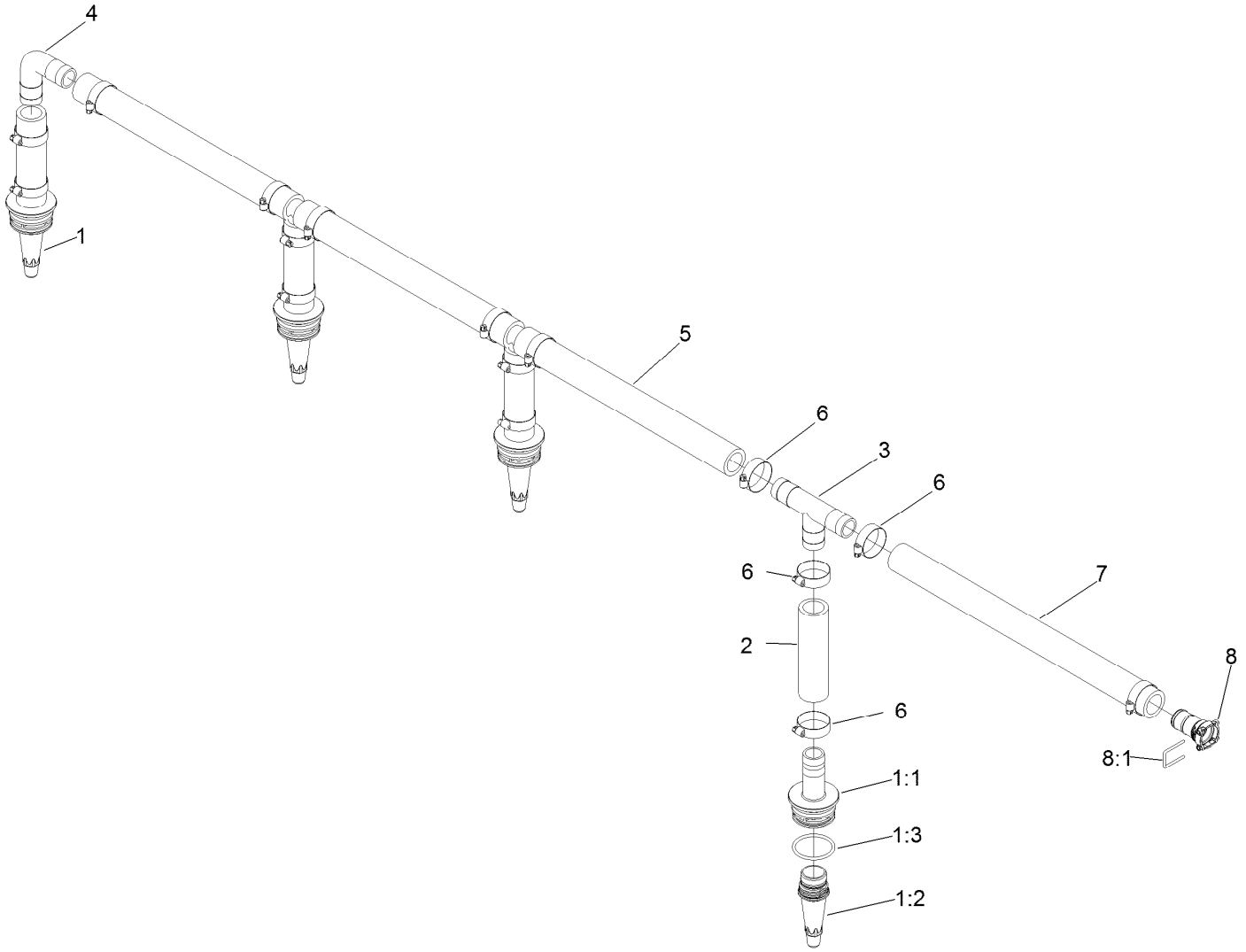

Agitation Hose Assembly No. 139-3093

Ref.	*Part Number*	*Qty.*	*Description*
1	131-3731	4	Agitation Nozzle ASM
1:1	131-3732	1	Fitting-Barb
1:2	120-8579	1	Nozzle-Agitation
1:3	121-4996	1	O-Ring
2	119-0441	4	Hose-Agitaiton
3	117-7866	3	Tee-Hosebarb
4	117-7867	1	Elbow-Hosebarb
5	117-7862	3	Hose-Main Agitation
6	2412-34	16	Clamp-Hose
7	137-4181	1	Hose-Agitation
8	127-9806	1	Fitting Kit
8:1	133-0398	1	Pin-Fork

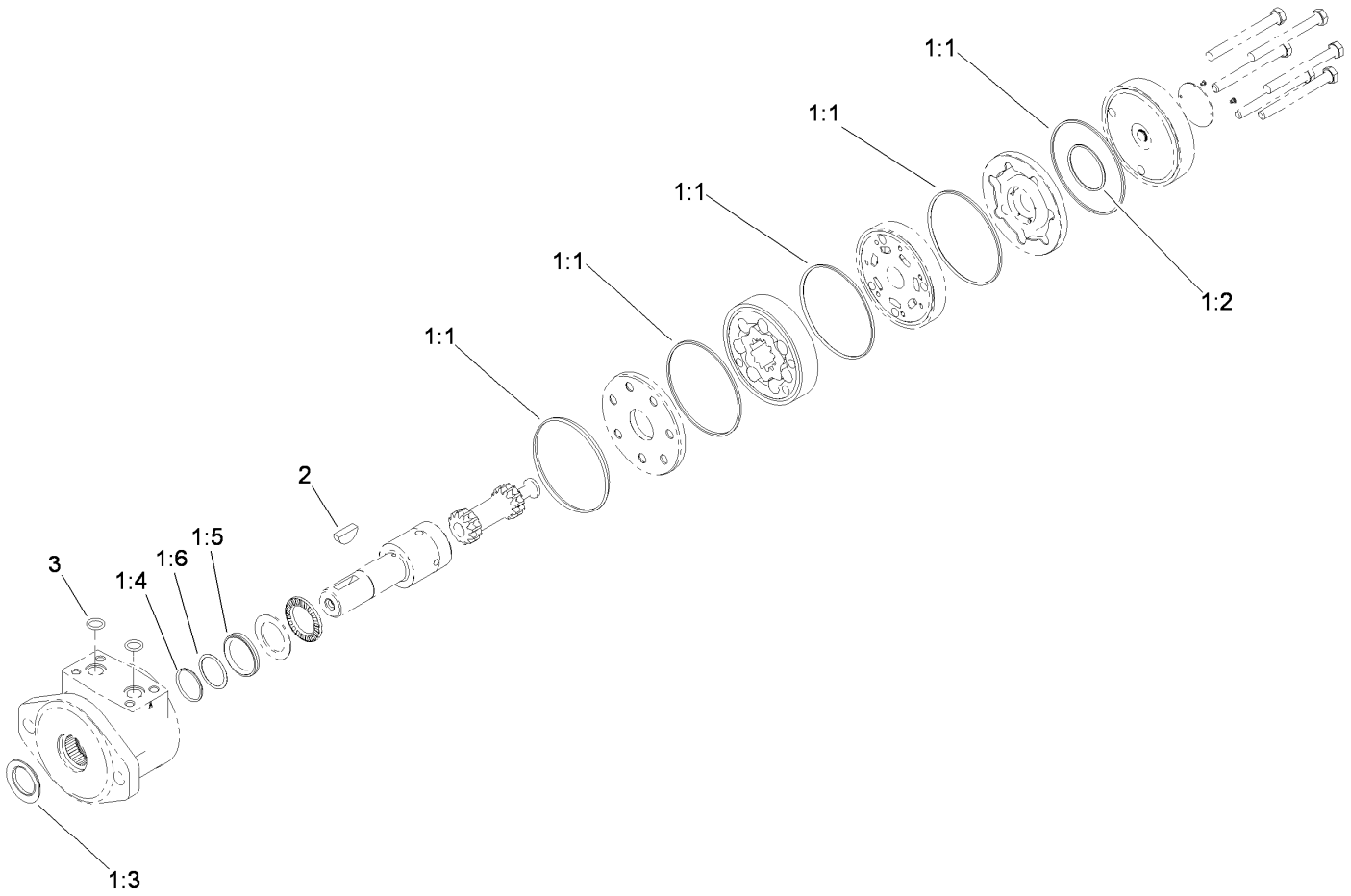

Hydraulic Motor Assembly No. 117-0706

Ref.	*Part Number*	*Qty.*	*Description*
1	119-0433	1	Wheel Motor Seal Kit ●
1:1		5	Seal-Ring ■
1:2		1	Seal-Commutator ■
1:3		1	Seal-Dirt And Water ■
1:4		1	Ring-Backing ■
1:5		1	Seal-Shaft ■
1:6		1	Washer-Backup ■
2	3257-8	1	Key-Woodruff
3	120-0691	2	O-Ring

● Not illustrated

■ Not serviced separately

On/Off 2-Way Valve Kit No. 131-0249

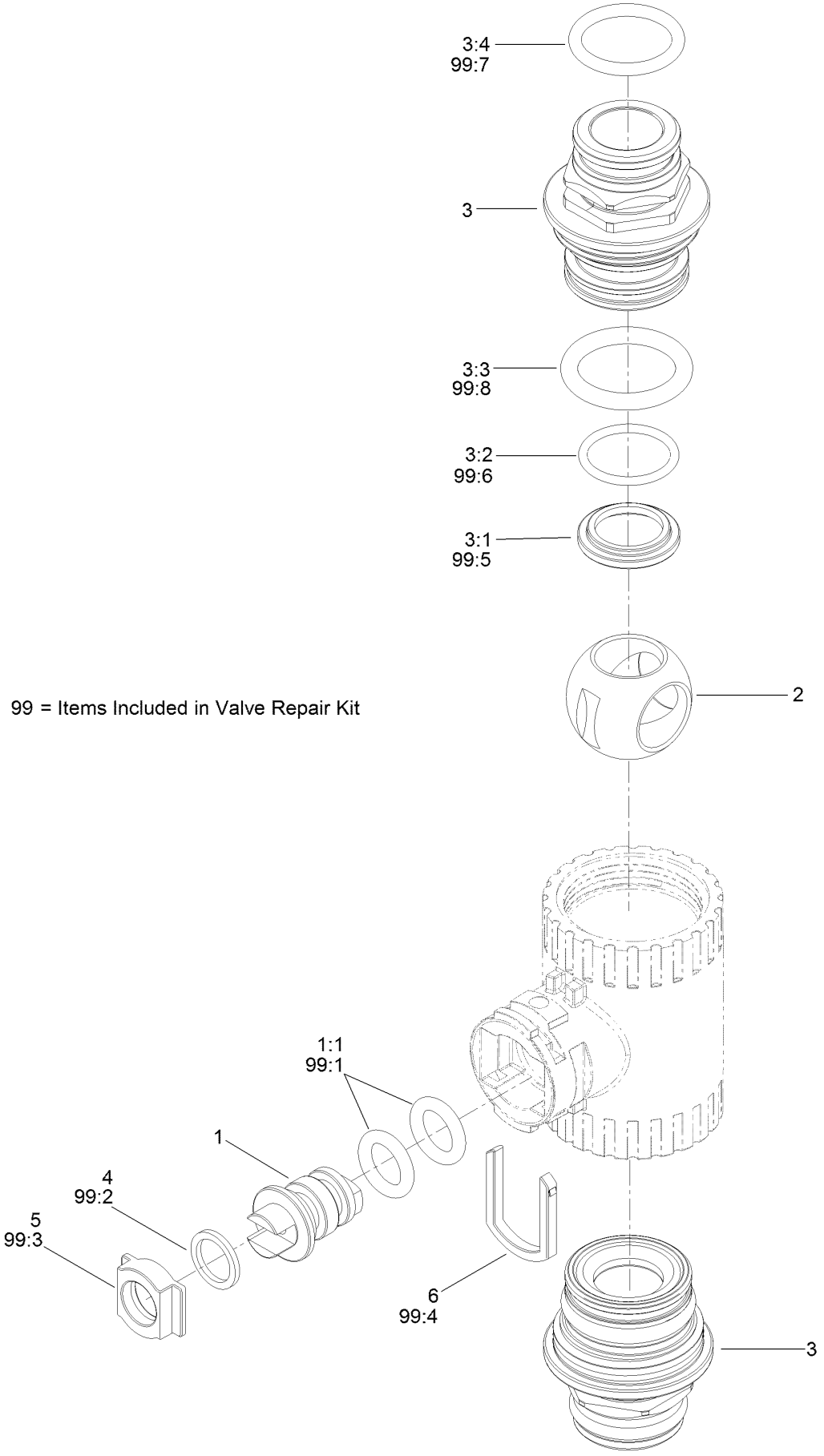

99 = Items Included in Valve Repair Kit

On/Off 2-Way Valve Kit No. 131-0249 (continued)

Ref.	Part Number	Qty.	Description
1	130-8248	1	Vavle Stem Kit
1:1	127-1197	2	O-Ring-Stem
2	131-0252	1	Ball-2-Way
3	130-7317	2	Endcap Kit
3:1	127-1192	1	Seat-Ball
3:2	127-1188	1	O-Ring, Seat (Ball)
3:3	127-1189	1	O-Ring, Endcap
3:4	127-1187	1	O-Ring, Endcap
4	127-1196	1	Washer-Stem, Valve
5	127-1195	1	Seat-Stem, Valve
6	127-1190	1	Fork-Stem, Valve
99	130-7304	1	Valve Repair Kit
99:1	127-1197	2	O-Ring-Stem
99:2	127-1196	2	Washer-Stem, Valve
99:3	127-1195	1	Seat-Stem, Valve
99:4	127-1190	1	Fork-Stem, Valve
99:5	127-1192	2	Seat-Ball
99:6	127-1188	2	O-Ring, Seat (Ball)
99:7	127-1187	2	O-Ring, Endcap
99:8	127-1189	2	O-Ring, Endcap

Manifold Connection Assembly

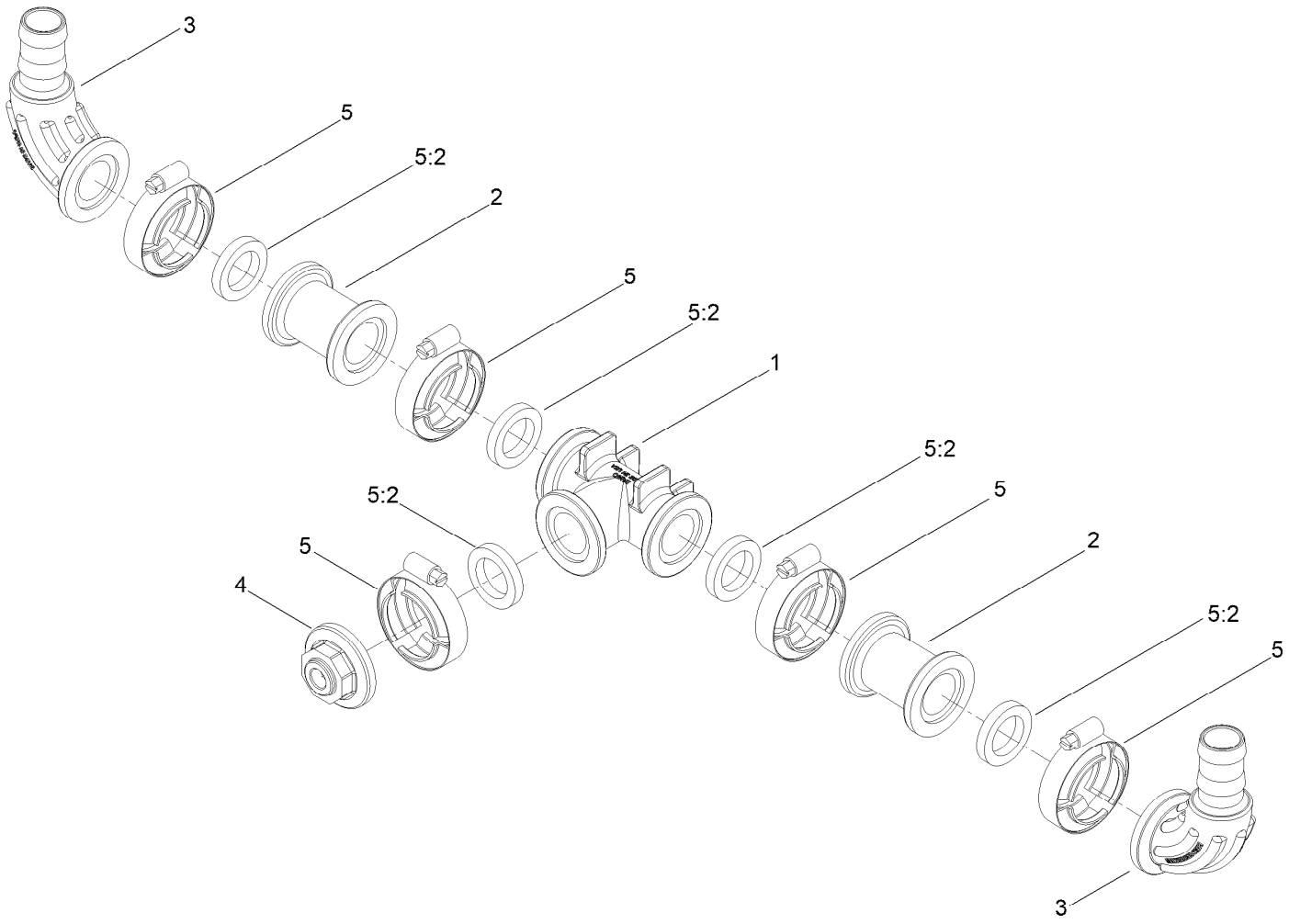

Manifold Connection Assembly (continued)

Ref.	Part Number	Qty.	Description
1	127-9834	1	Fitting-Tee
2	127-9814	2	Fitting-Adapter
3	131-0241	2	Fitting-Elb 90
4	127-1185	1	Fitting-Cap, Port
5	127-9829	5	Clamp/Gasket Kit
5:2	127-1145	1	Gasket-Flange

ASC-10 Mounting Assembly

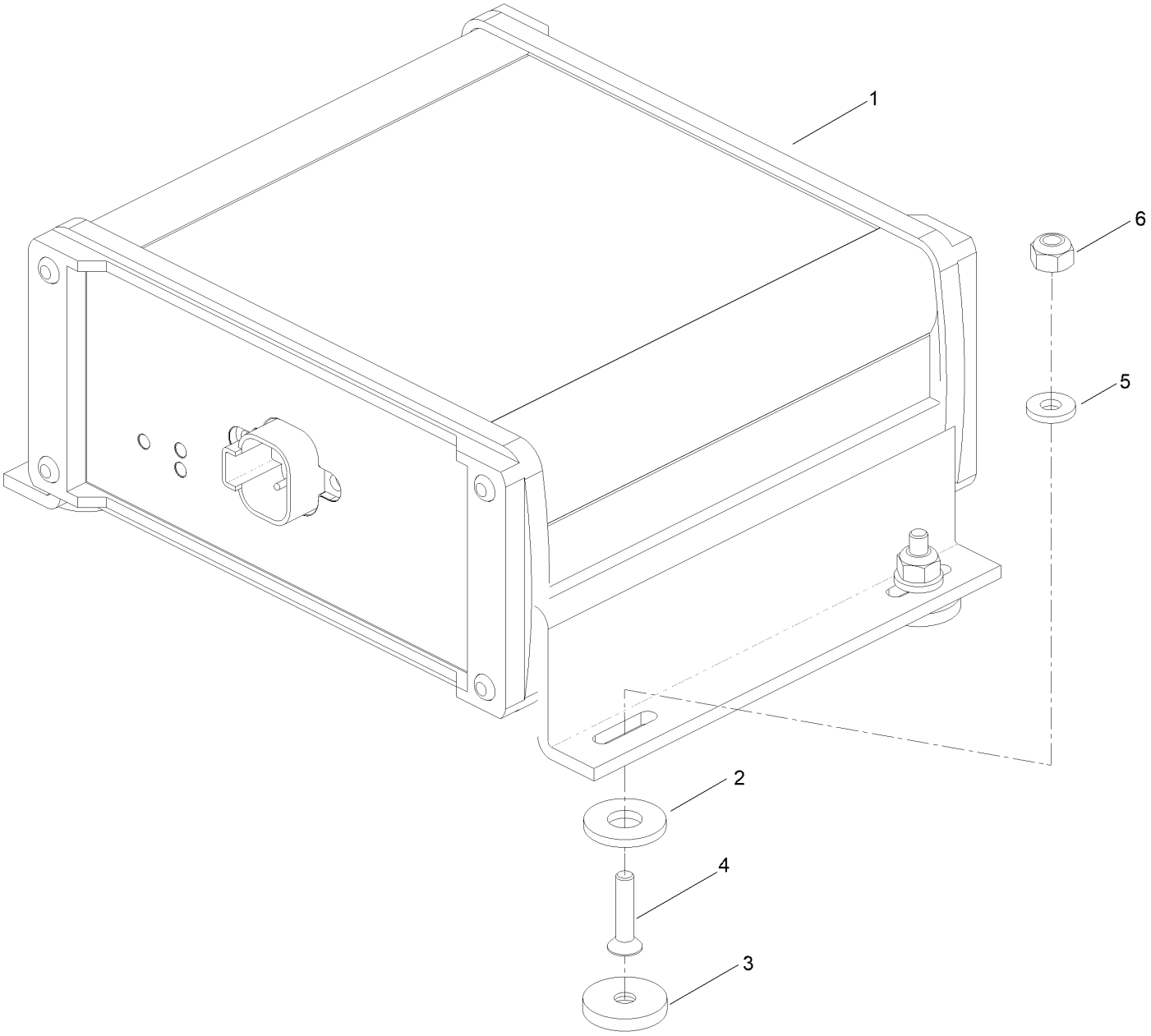

ASC-10 Mounting Assembly (continued)

Ref.	Part Number	Qty.	Description
1	137-4258	1	Controller - Rate/Auto-Section, Asc-10
2	3256-2	2	Washer-Flat
3	140-7369	4	Magnet
4	147-4691	4	Screw-PFH
5	3256-21	4	Washer-Flat
6	3296-1	4	Nut-Lock

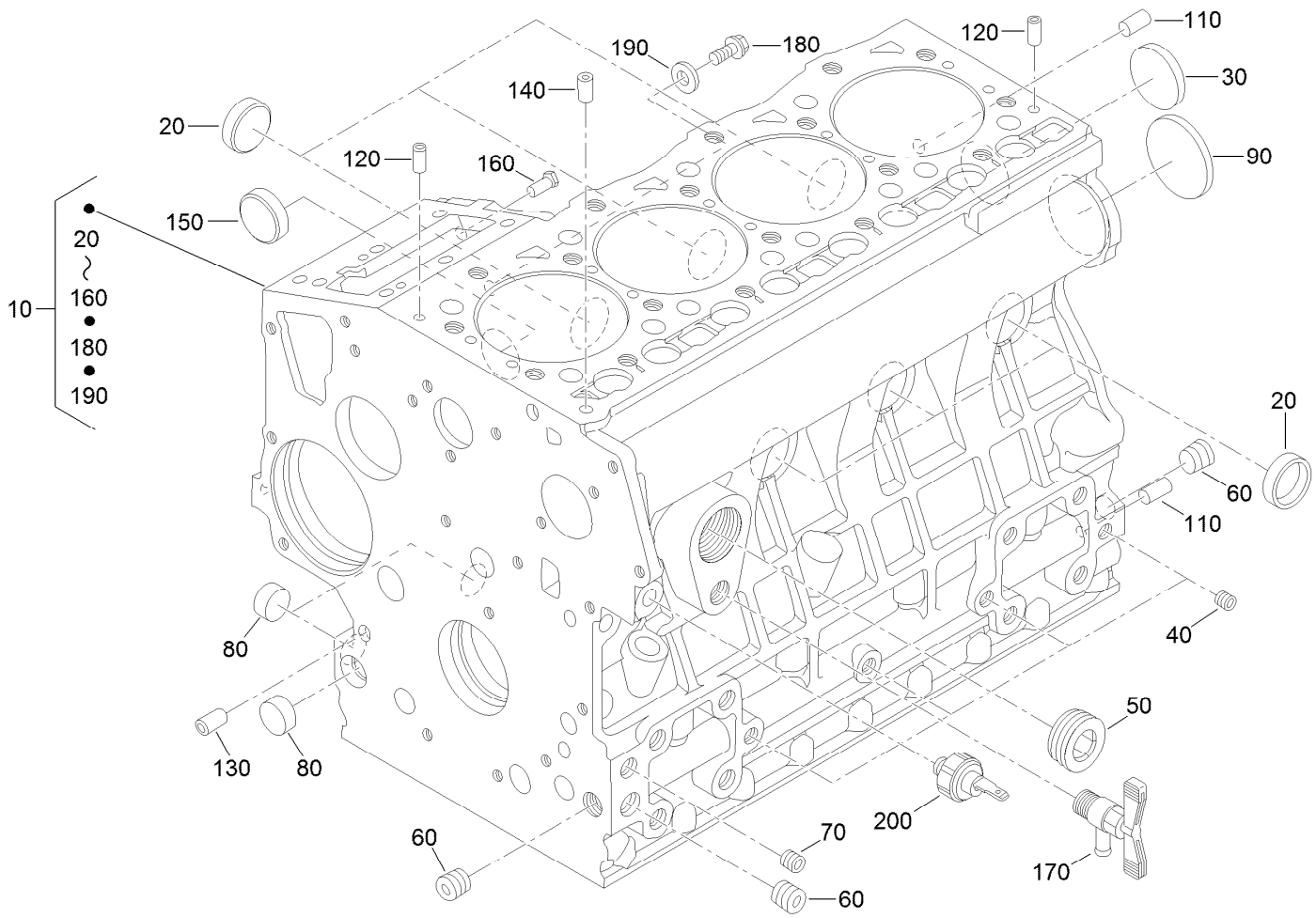

Crankcase Assembly

Ref.	Part Number	Qty.	Description
10	127-0451	1	Crankcase ASM
20	98-9398	6	Cap-Sealing
30	98-7539	1	Cap-Sealing
40	98-9687	4	Plug
50	105-3779	1	Plug
60	98-9597	3	Plug
70	98-7487	2	Plug
80	98-9379	3	Plug-Expansion
90	98-9668	1	Plug-Expansion
110	98-9377	2	Pin-Straight
120	98-9376	2	Pin-Straight
130	98-9387	2	Pin-Pipe
140	98-9539	1	Pin-Pipe
150	98-9599	1	Plug
160	105-3796	1	Pin-Spring, Start
170	120-3121	1	Draincock ASM
180	99-8363	1	Bolt-Flange
190	98-7654	1	Gasket
200	98-9416	1	Switch-Oil

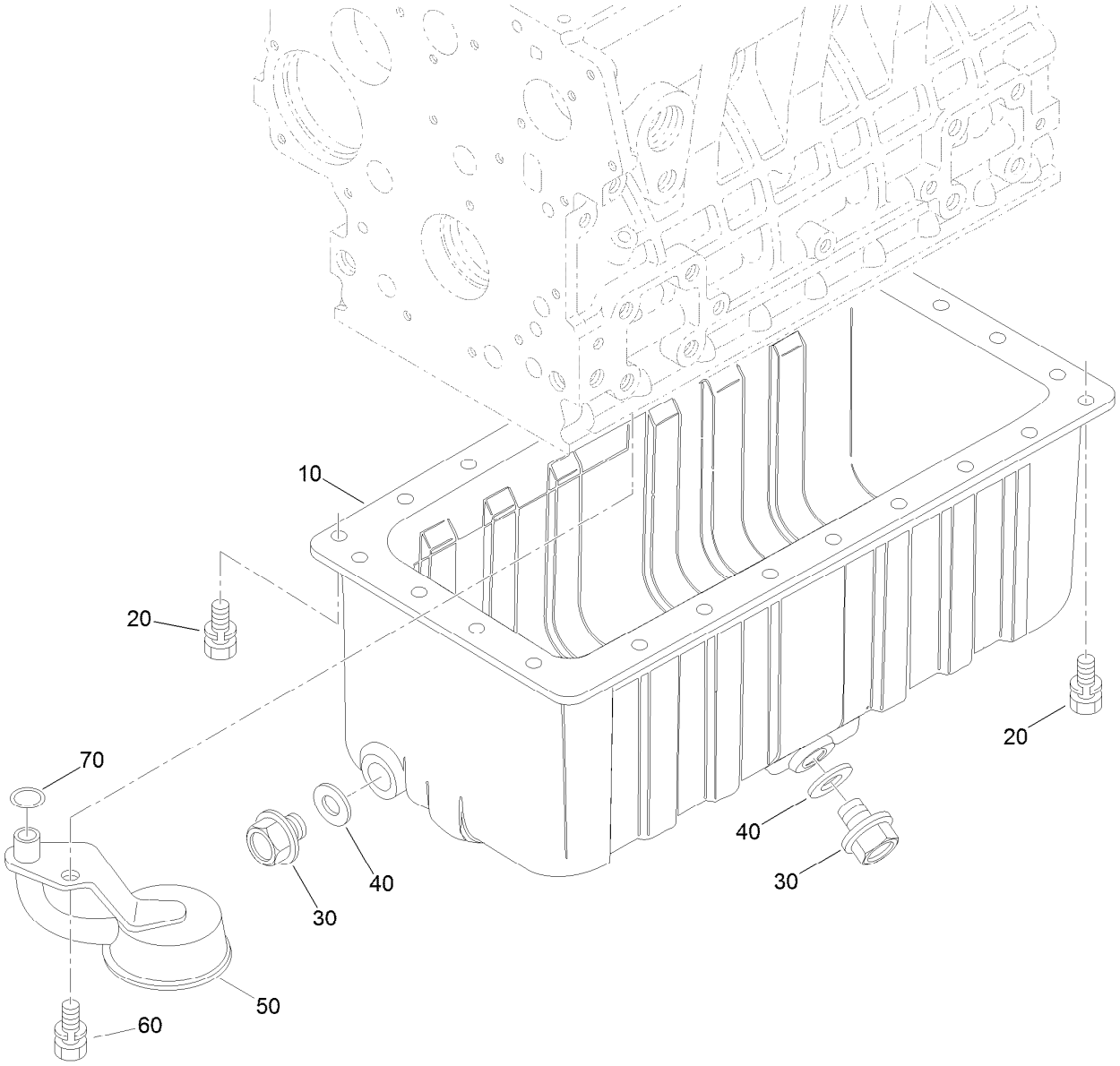

Oil Pan Assembly

Ref.	*Part Number*	*Qty.*	*Description*
10	108-2852	1	Oil Pan ASM
20	98-9351	26	Bolt
30	114-8151	2	Plug-Drain
40	98-7524	2	Gasket
50	112-7003	1	Head-Filter, Oil
60	98-7526	1	Bolt
70	105-3776	1	O-Ring

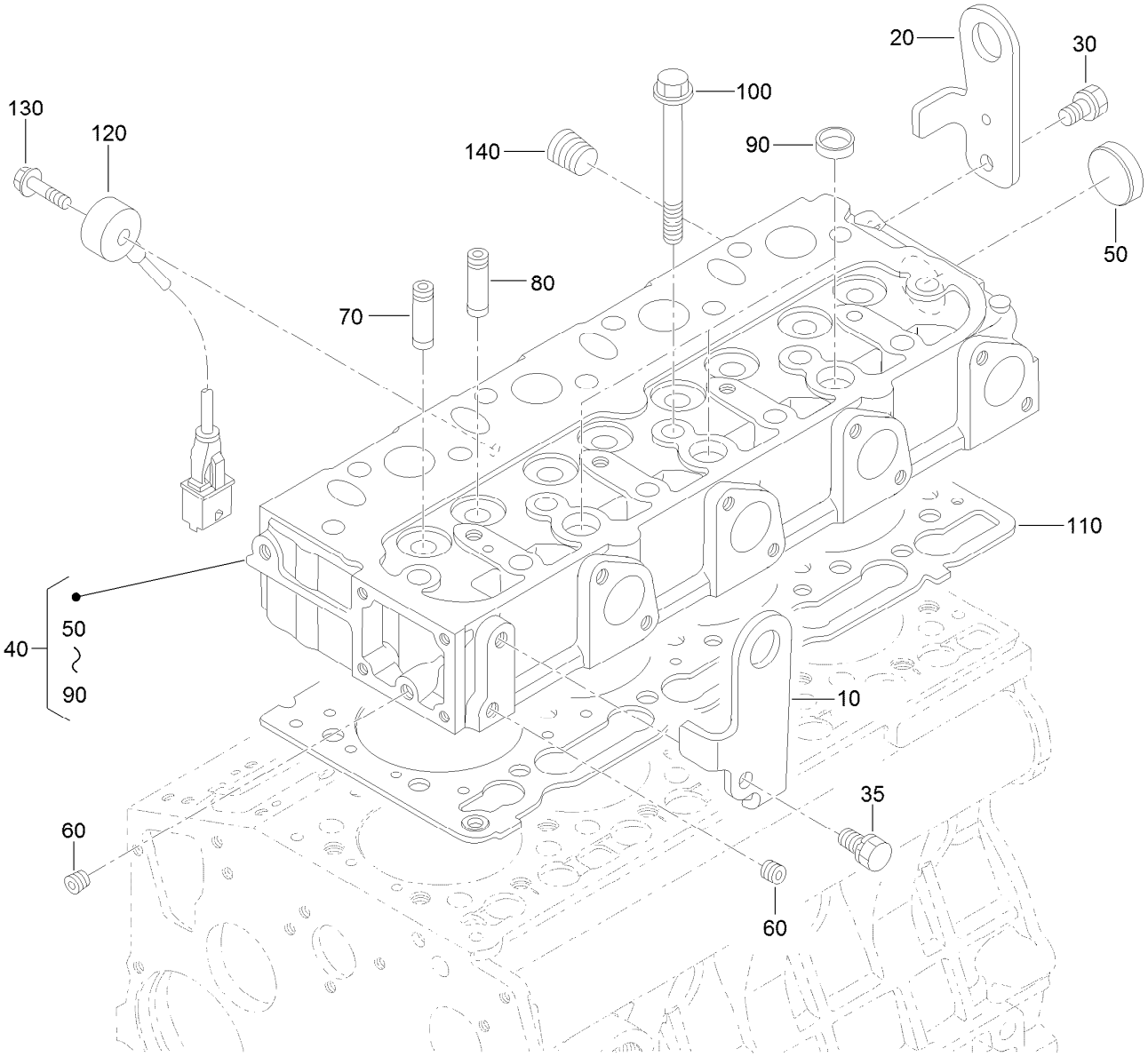

Cylinder Head Assembly

Ref.	*Part Number*	*Qty.*	*Description*
10	127-0463	1	Hook-Engine
20	127-0464	1	Hook-Engine
30	100-9195	1	Bolt
35	98-7526	1	Bolt
40	127-0452	1	Cylinder Head ASM
50	105-3705	1	Cap-Sealing
60	98-9687	2	Plug
70	107-9066	4	Guide-Valve, Inlet
80	127-0478	4	Guide-Valve, Exhaust
90	98-9389	3	Cap-Sealing
100	98-9479	9	Bolt-Head, Cylinder
110	127-0434	1	Gasket-Head, Cylinder
120	127-0467	1	Sensor-Knock
130	127-0506	1	Bolt-Sensor, Knock
140	98-9444	1	Plug

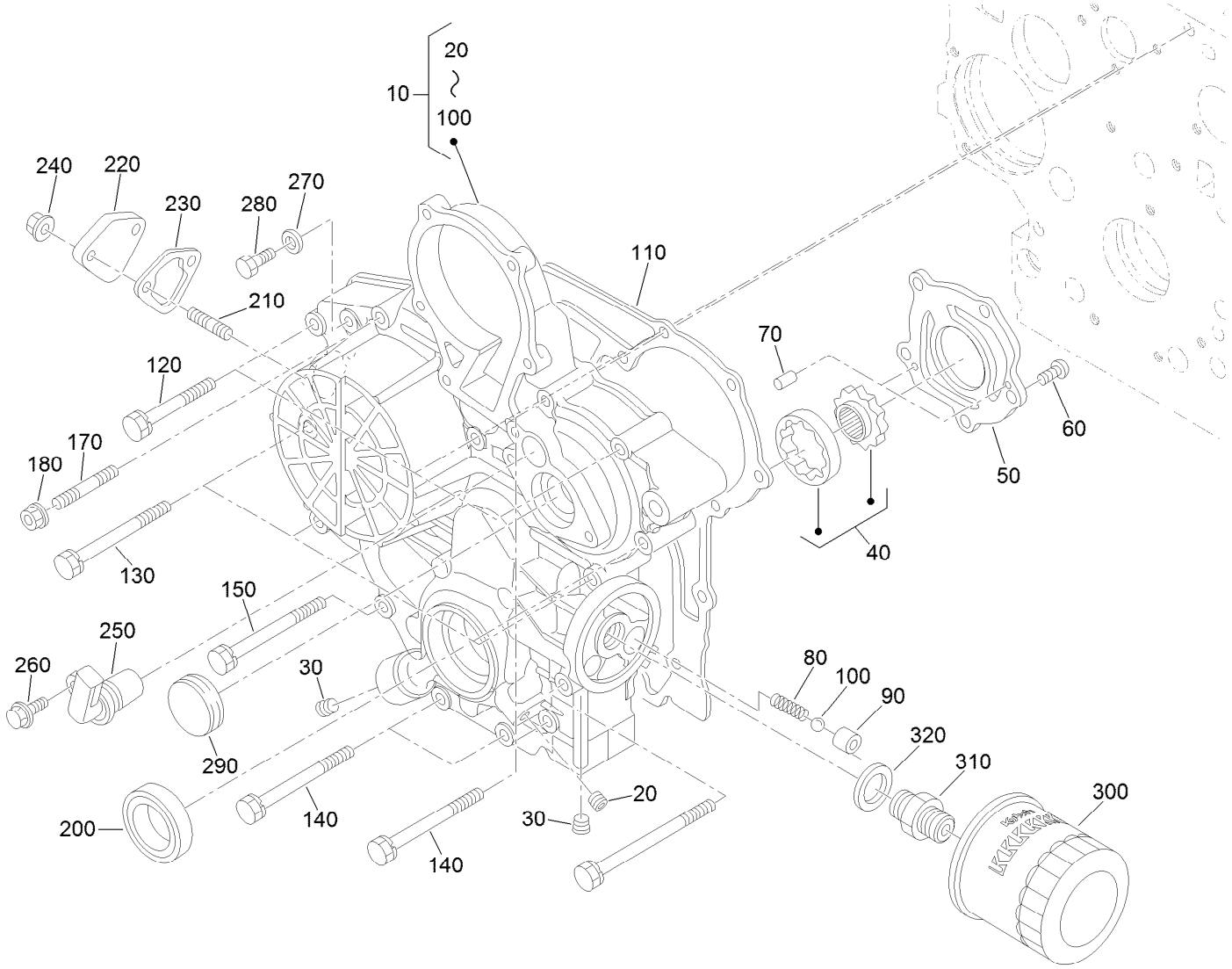

Gear Case and Oil Filter Cartridge Assembly

Ref.	Part Number	Qty.	Description
10	127-0453	1	Gear Case ASM
20	98-7487	1	Plug
30	127-0425	2	Plug
40	98-9540	1	Oil Pump Rotor ASM
50	107-9069	1	Cover-Pump, Oil
60	107-9071	5	Screw
70	107-9072	2	Pin-Straight
80	98-9544	1	Spring
90	98-9543	1	Seat-Valve
100	98-9380	1	Ball
110	98-9633	1	Gasket-Case, Gear
120	100-1765	3	Bolt
130	105-3797	4	Bolt
140	98-9356	4	Bolt
150	107-9074	1	Bolt

Ref.	Part Number	Qty.	Description
170	105-3709	1	Stud
180	100-2203	1	Nut-Flange
200	119-8038	1	Seal-Oil
210	105-3710	2	Stud
220	99-3514	1	Cover
230	117-7562	1	Gasket-Pump, Fuel
240	100-2203	2	Nut-Flange
250	127-0504	1	Sensor-Revolution
260	99-8363	1	Bolt-Flange
270	98-7654	1	Gasket
280	127-0400	1	Bolt-Hex
290	99-3515	1	Plug-Gearcase
300	108-3841	1	Filter-Oil
310	98-9388	1	Joint-Pipe
320	98-7562	1	Washer-Plain

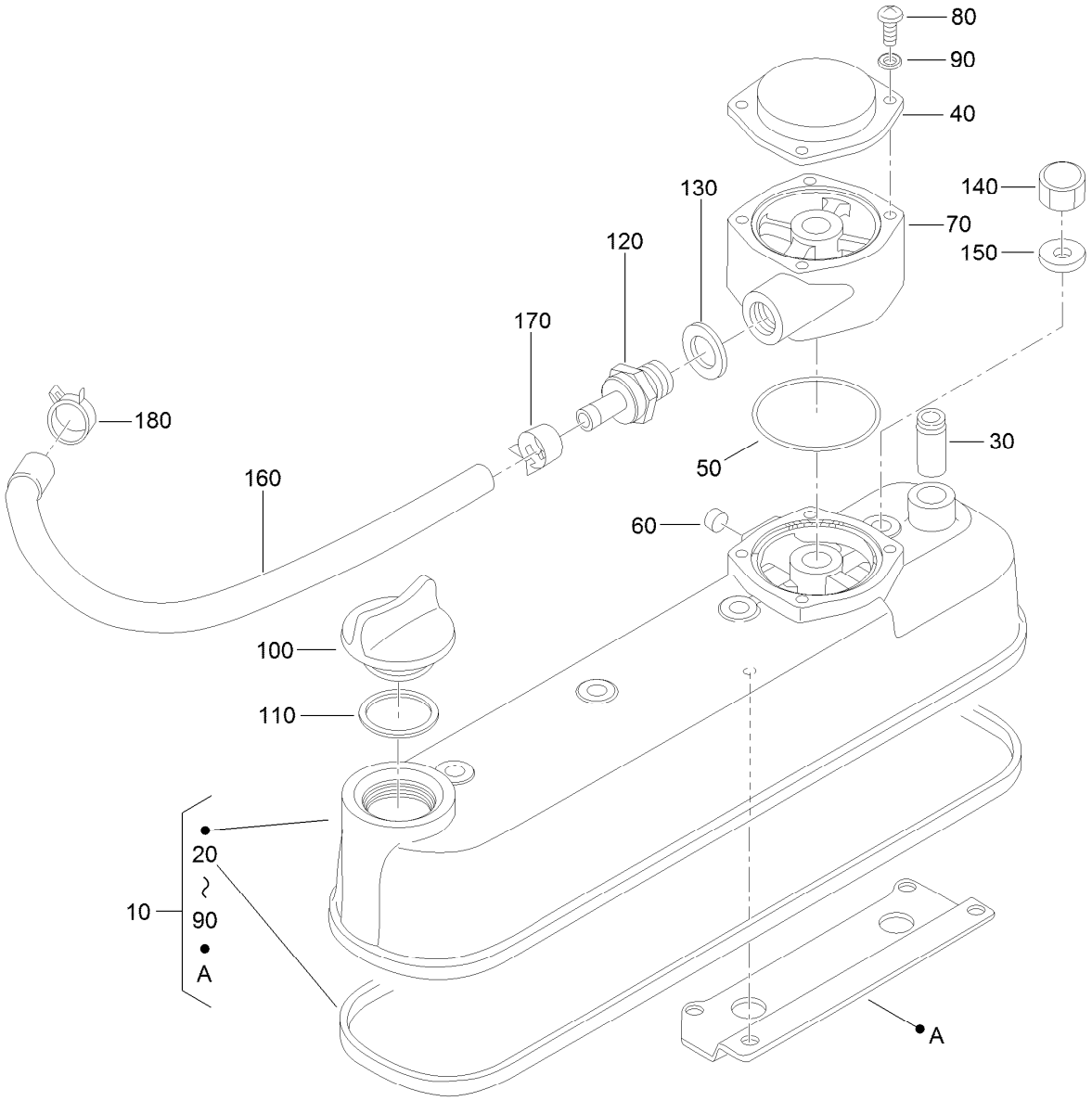

Cylinder Head Cover Assembly

Ref.	Part Number	Qty.	Description
10	127-0479	1	Cylinder Head Cover ASM
20	105-3712	1	Gasket-Cover, Head
30	98-7766	1	Pipe-Return, Water
40	108-7060	1	Cover-Breather
50	110-3846	2	O Ring-Breather
60	115-3042	1	Cap-Sealing
70	127-0480	1	Spacer-Breather
80	115-3044	4	Screw-Pan Head
90	127-0408	4	Washer-Lock, Spring

Ref.	Part Number	Qty.	Description
100	107-9075	1	Plug-Filler, Oil
110	99-3446	1	O-Ring
120	127-0468	1	Valve-Pcv
130	98-7528	1	O Ring-Copper
140	98-9455	4	Nut-Cap
150	98-9454	4	Gasket
160	127-0469	1	Tube-Breather
170	127-0491	1	Clamp-Hose
180	98-9579	1	Band-Pipe

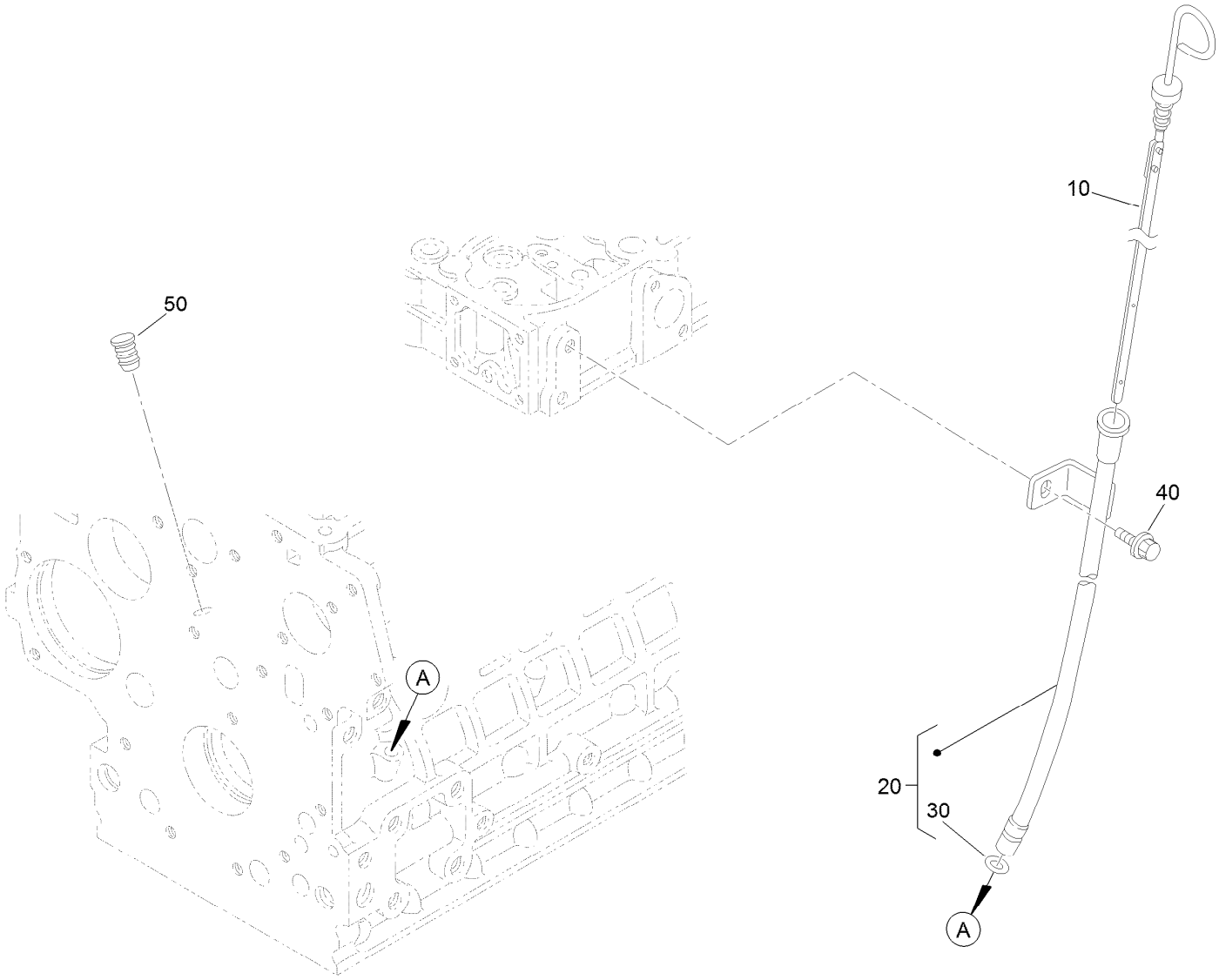

Oil Dipstick and Guide Assembly

Ref.	*Part Number*	*Qty.*	*Description*
10	98-9670	1	Gauge-Oil
20	98-9672	1	Oil Gauge Guide ASM
30	98-9722	1	O-Ring
40	115-8504	1	Bolt-Flange
50	110-3720	1	Plug-Gauge, Oil

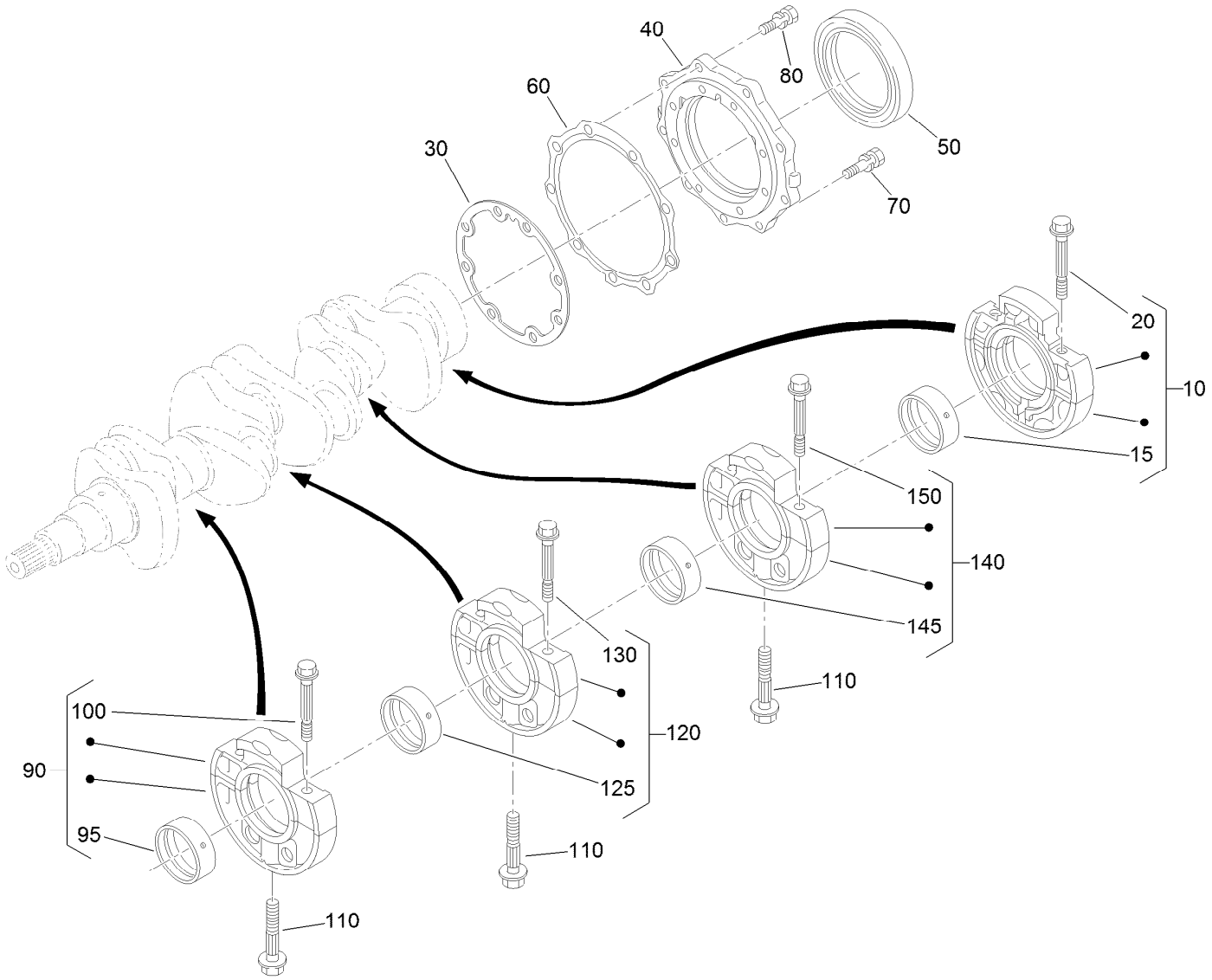

Main Bearing Case Assembly

Ref.	Part Number	Qty.	Description
10	112-7026	1	Wheel Bearing Case ASM
15	98-9525	1	Metal-Crankshaft (STD Set)
20	98-9484	2	Bolt-Case, Bearing
30	131-6554	1	Gasket-Case, Bearing
40	112-7046	1	Cover-Case, Bearing
50	112-0180	1	Seal-Oil
60	112-7037	1	Gasket-Cover, Case
70	127-0441	8	Bolt
80	127-0442	9	Bolt
90	127-0427	1	Main Bearing Case ASM

Ref.	Part Number	Qty.	Description
95	98-9524	2	Metal-Crankshaft (STD Set)
100	98-9484	2	Bolt-Case, Bearing
110	98-9485	3	Bolt-Case, Bearing
120	127-0428	1	Main Bearing Case ASM
125	98-9524	1	Metal-Crankshaft (STD Set)
130	98-9484	2	Bolt-Case, Bearing
140	127-0429	1	Bearing Case ASM
145	98-9524	1	Metal-Crankshaft (STD Set)
150	98-9484	2	Bolt-Case, Bearing

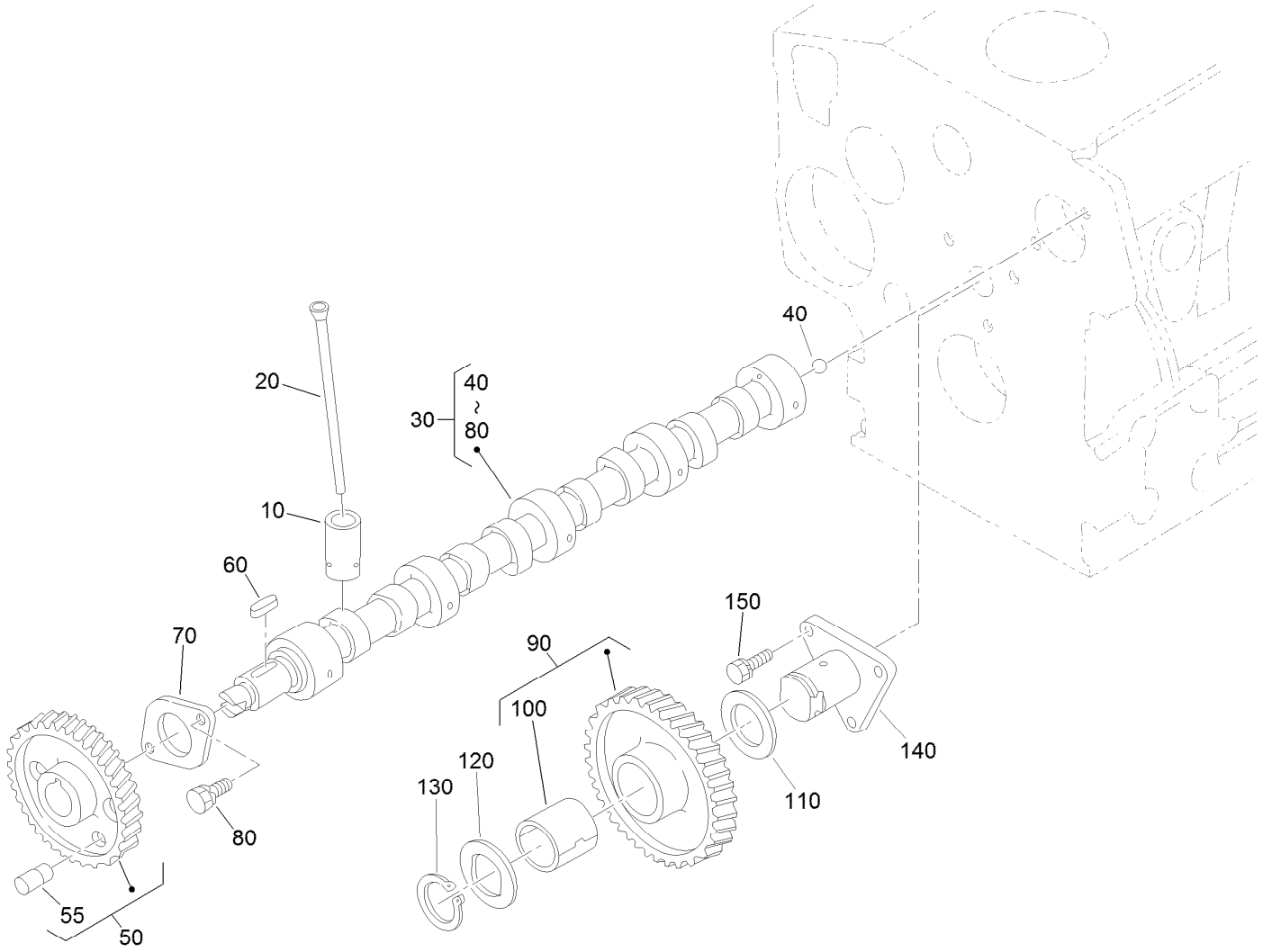

Cam Shaft and Idle Gear Assembly

Ref.	Part Number	Qty.	Description
10	112-0185	8	Tappet
20	127-0421	8	Rod-Push
30	127-0481	1	Camshaft ASM
40	110-3729	1	Ball
50	127-0482	1	Cam Gear ASM
55	127-0483	1	Pin-Gear, Cam
60	98-9378	1	Key-Feather
70	98-9510	1	Stopper-Camshaft

Ref.	Part Number	Qty.	Description
80	98-7692	2	Bolt
90	117-7584	1	Idler Gear ASM
100	117-7585	1	Bushing-Gear, Idle
110	98-9535	1	Collar-Gear, Idle
120	98-9536	1	Collar-Gear, Idle
130	98-9534	1	Circlip-Gear, Idle
140	98-9533	1	Shaft-Gear, Idle
150	98-7692	3	Bolt

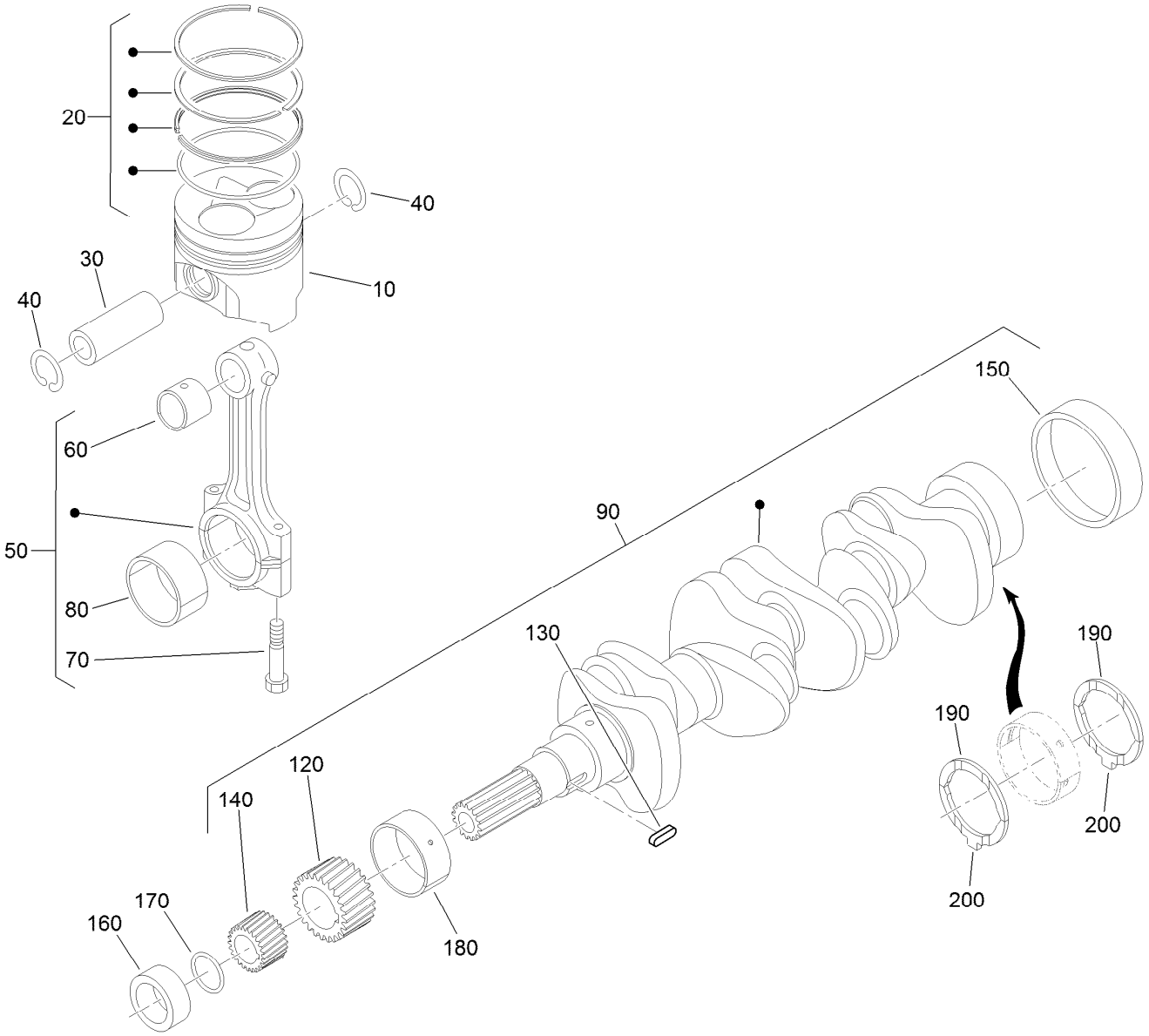

Piston and Crankshaft Assembly

Ref.	Part Number	Qty.	Description
10	127-0487	4	Piston (STD)
10	127-0488	4	Piston (+0.50MM)
20	127-0485	4	Piston Ring ASM (STD)
20	127-0486	4	Piston Ring ASM (+0.50MM)
30	98-9513	4	Pin-Piston
40	98-9514	8	Circlip-Pin, Piston
50	117-7586	4	Connecting Rod ASM
60	115-3014	4	Bushing-Pin, Piston
70	98-9517	8	Bolt-Rod, Connecting
80	98-9553	4	Bearing-Rod (STD)
80	98-9519	4	Bearing-Rod (-0.2MM)
80	117-7588	4	Metal-Crankpin (-0.4MM)
90	127-0433	1	Metal-Crankshaft (-0.2MM)
120	117-7561	1	Gear-Crankshaft

Ref.	Part Number	Qty.	Description
130	98-9666	1	Key
140	127-0445	1	Gear-Drive, Oil Pump
150	98-9522	1	Sleeve-Crankshaft
160	127-0444	1	Collar-Crankshaft
170	105-3783	1	O-Ring
180	98-9524	3	Metal-Crankshaft (STD Set)
180	127-0433	3	Metal-Crankshaft (-0.2MM)
180	127-0432	1	Metal-Crankshaft (-0.4MM)
190	98-9413	2	Bearing-Thrust (STD)
190	127-0416	2	Metal-Side (+0.2Mm)
190	127-0417	2	Metal-Side (+0.40Mm)
200	98-9688	2	Bearing-Thrust (STD)
200	127-0437	2	Metal-Side (+0.2MM)
200	127-0438	2	Metal-Side (+0.40MM)

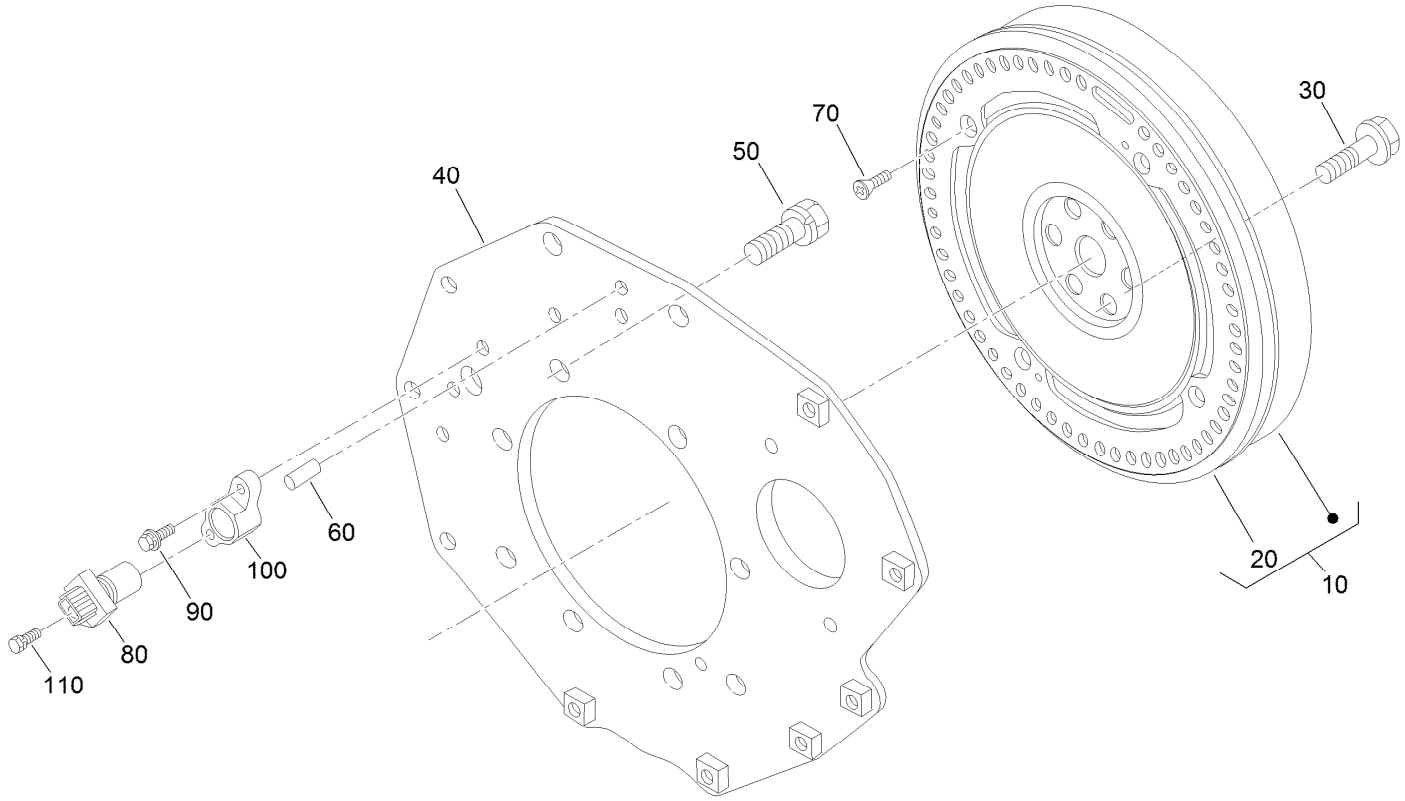

Flywheel and Sensor Switch Assembly

Ref.	*Part Number*	*Qty.*	*Description*
10	127-0489	1	Flywheel ASM
20	115-3015	1	Gear-Ring
30	98-9537	6	Bolt-Flywheel
40	127-0454	1	Plate-End, Rear
50	98-9392	8	Bolt
60	127-0412	2	Pin-Straight
70	127-0407	4	Screw-Head, Flat
80	125-9103	1	Sensor Stick ASM
90	127-0403	1	Bolt-Flange
100	127-0494	1	Holder-Sensor
110	127-0404	1	Bolt-Flange

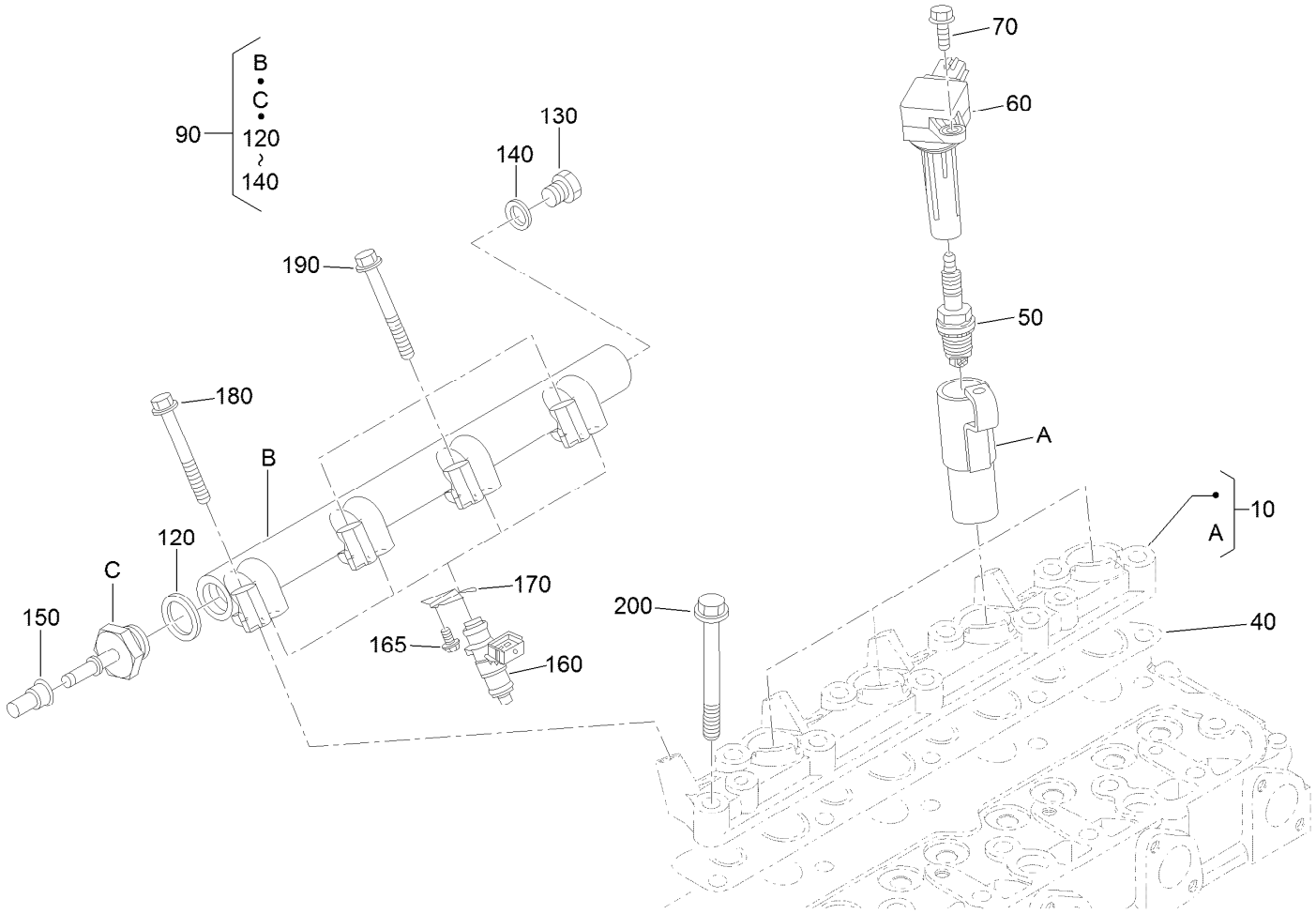

Ignition Coil and Delivery Pipe Assembly

Ref.	*Part Number*	*Qty.*	*Description*
10	127-0459	1	Flange-Injector
40	127-0460	1	Gasket-Flange
50	127-0499	4	Spark Plug
60	127-0498	4	Coil-Ignition
70	99-8363	4	Bolt-Flange
90	127-0509	1	Delivery Pipe ASM
120	127-0411	1	Packing
130	127-0413	1	Plug

Ref.	*Part Number*	*Qty.*	*Description*
140	125-9096	1	Gasket
150	127-0456	1	Cap-Fuel
160	125-9107	4	Injector
165	100-1774	4	Bolt-Flange
170	127-0458	4	Stopper-Injector
180	127-0404	1	Bolt-Flange
190	127-0405	3	Bolt-Flange
200	127-0466	9	Bolt-Head, Cylinder

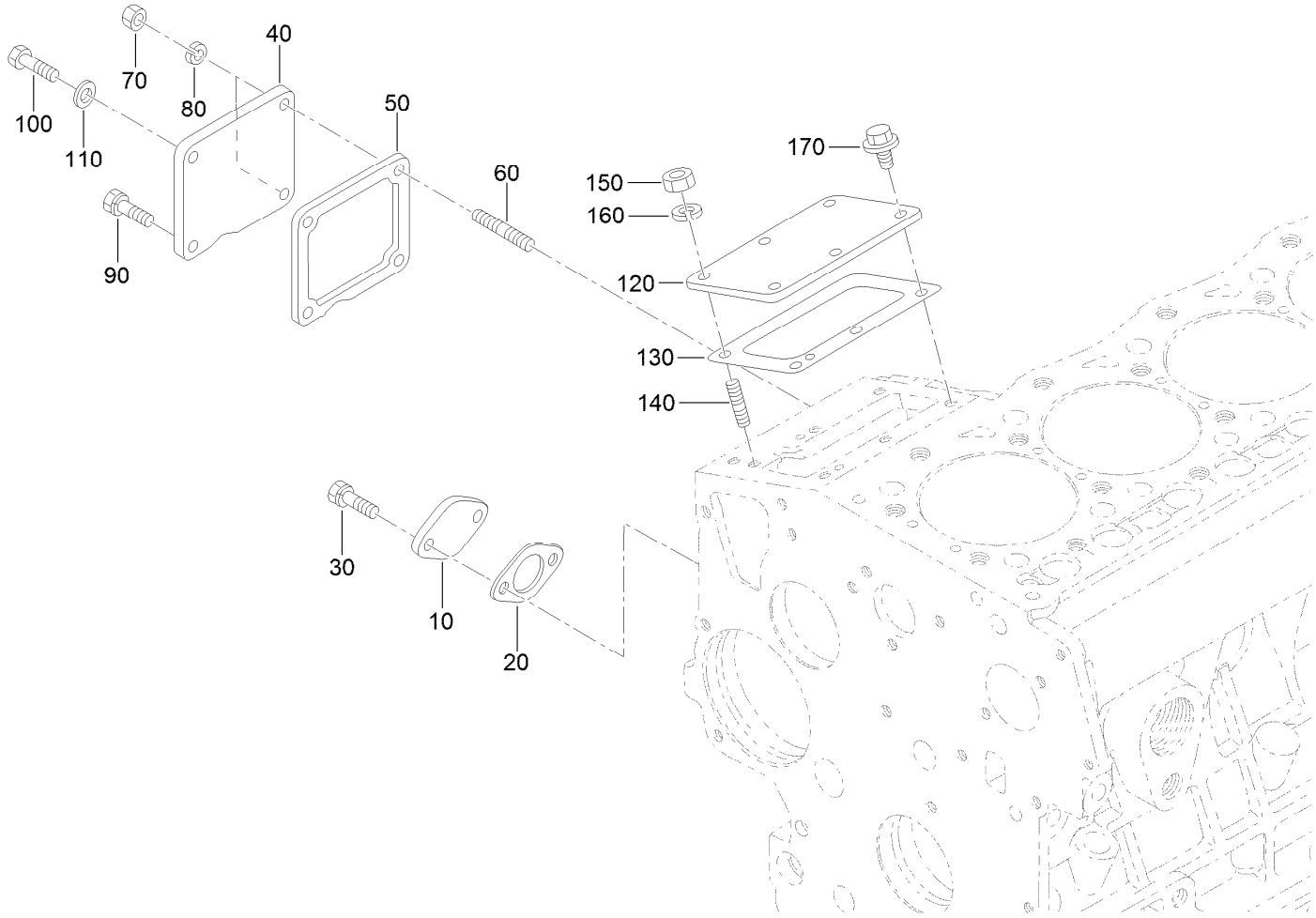

Engine Covers Assembly

Ref.	Part Number	Qty.	Description
10	115-4122	1	Cover-Shaft, Fork Lever
20	98-9682	1	Gasket
30	98-9350	2	Bolt
40	127-0418	1	Cover
50	98-9637	1	Gasket
60	105-3710	2	Stud
70	98-7572	2	Nut
80	98-7699	2	Washer-Spring
90	98-9350	1	Bolt

Ref.	Part Number	Qty.	Description
100	127-0401	1	Bolt-Hex
110	98-7654	1	Gasket
120	127-0465	1	Cover-Pump, Injection
130	105-3728	1	Shim-Pump, Injection (.20MM)
140	98-9438	3	Stud
150	100-1776	3	Nut
160	98-7699	3	Washer-Spring
170	100-1774	3	Bolt-Flange

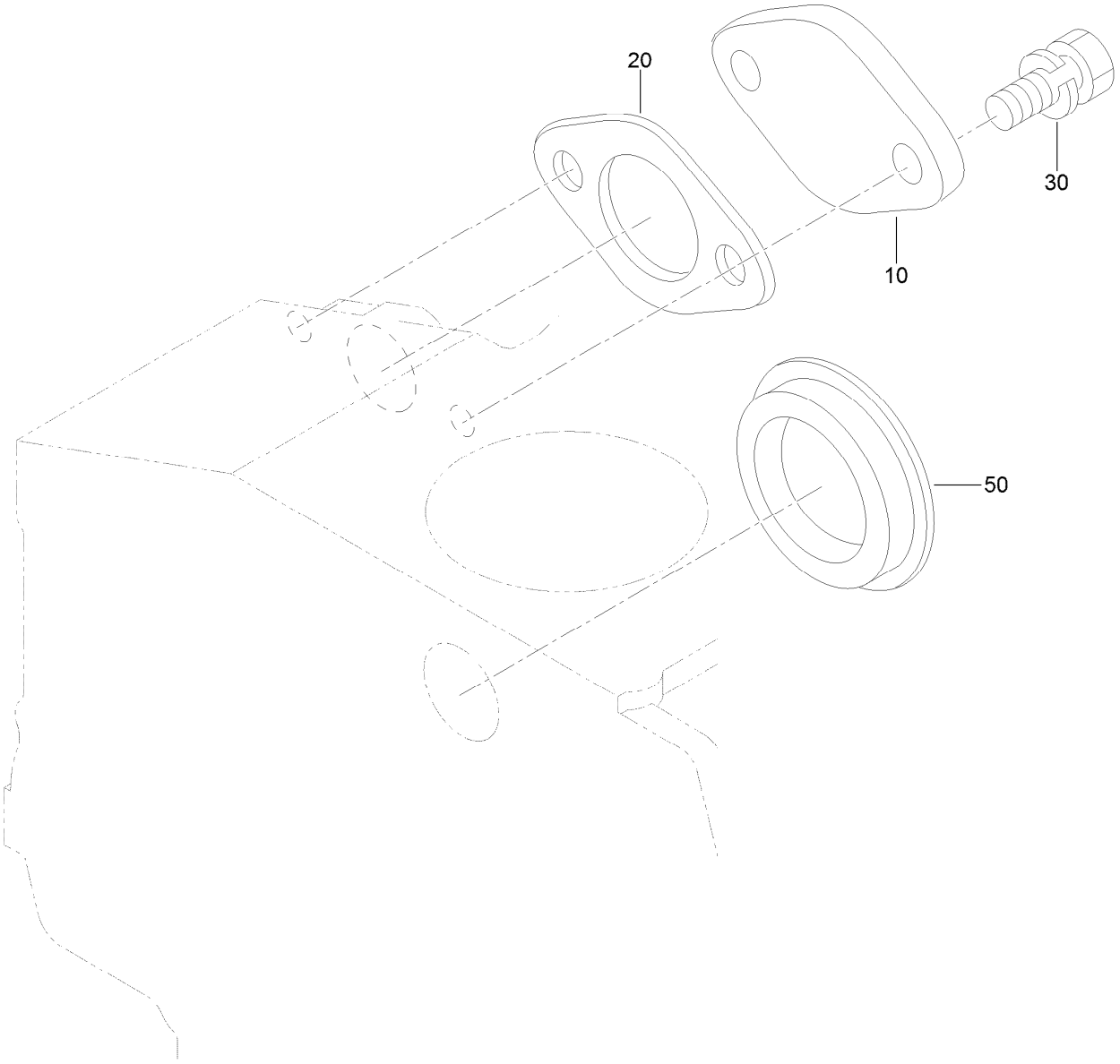

Solenoid Cover and Hydraulic Pump Cover

Ref.	*Part Number*	*Qty.*	*Description*
10	127-0419	1	Cover-Solenoid
20	98-9683	1	Gasket-Cover, Solenoid
30	98-7692	2	Bolt
50	112-7016	1	Cover-Pump

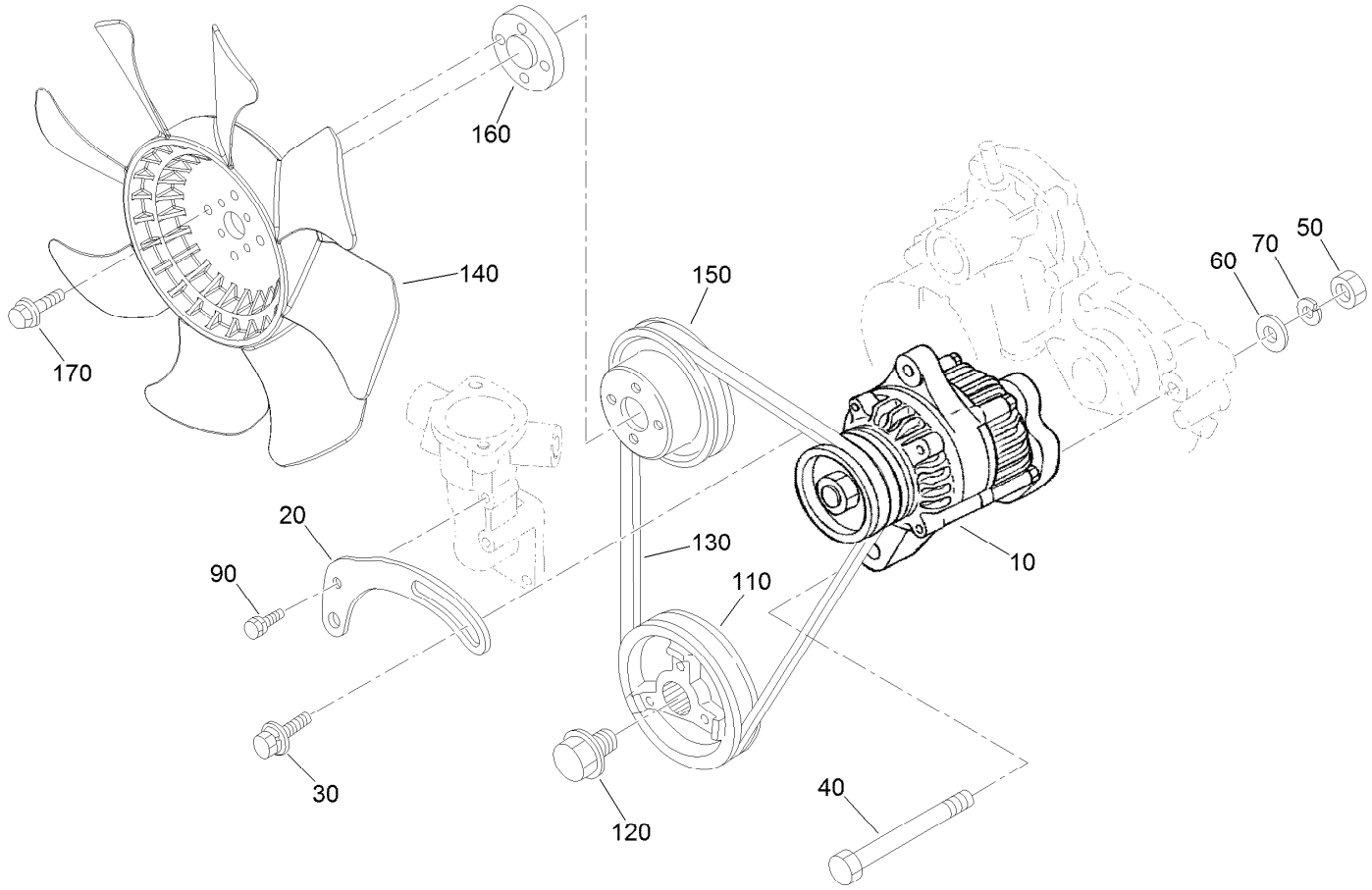

Alternator, Pulley and Fan Assembly

Ref.	*Part Number*	*Qty.*	*Description*
10	131-9567	1	60 Amp Alternator ASM
20	117-5542	1	Bracket
30	108-7088	1	Bolt
40	98-9360	1	Bolt
50	98-7737	1	Nut
60	98-9366	1	Washer-Plain
70	98-7738	1	Washer-Spring
90	98-7692	1	Bolt
110	105-3745	1	Pulley-Drive, Fan
120	98-9585	1	Bolt
130	104-3494	1	Belt-V
140	131-5803	1	Fan
150	98-9584	1	Pulley-Fan
160	108-2872	1	Collar-Fan
170	114-8414	4	Screw-HHF

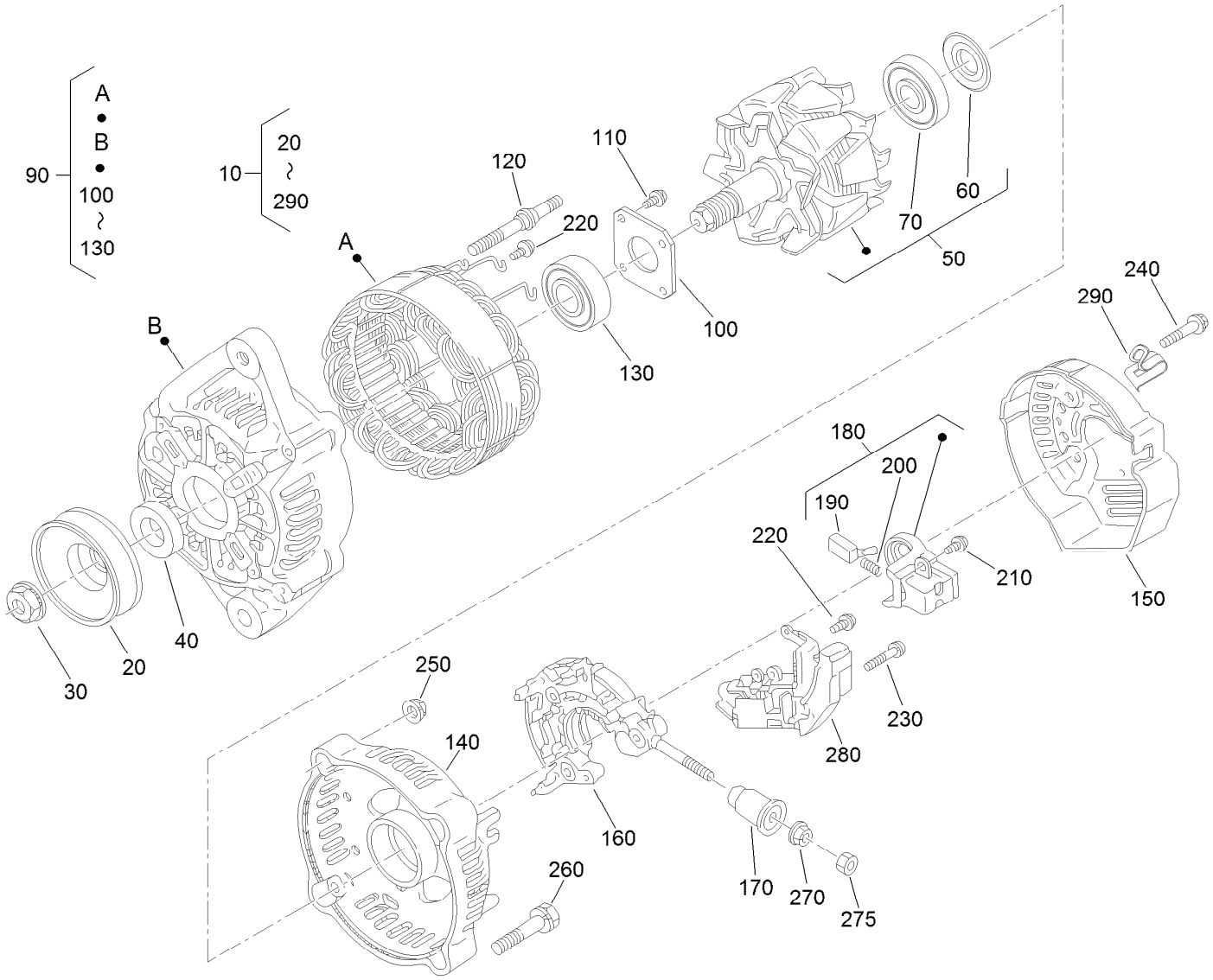

Alternator Assembly No. 131-9567

Ref.	Part Number	Qty.	Description
10	131-9567	1	60 Amp Alternator ASM
20	98-9453	1	Pulley-Dynamo
30	98-7708	1	Nut
40	98-7709	1	Collar
50	107-0136	1	Rotor ASM
60	98-7711	1	Cover-Bearing
70	107-0138	1	Bearing-Ball
90	131-9573	1	Frame-End, Drive
100	98-7715	1	Plate-Retainer
110	98-7716	4	Screw-Head, Round
120	98-7717	2	Bolt-Through
130	133-2811	1	Bearing
140	121-3812	1	Frame-End
150	121-3813	1	Cover-End
160	121-3805	1	Rectifier ASM

Ref.	Part Number	Qty.	Description
170	117-0321	1	Insulation-Brush
180	107-0141	1	Brush Holder ASM
190	98-7724	2	Brush
200	98-7725	2	Spring-Brush
210	98-7726	2	Screw-Head, Round
220	98-7727	6	Screw-Head, Round
230	98-7728	1	Screw-Head, Round
240	98-7729	3	Bolt
250	98-7730	2	Nut
260	98-7731	2	Bolt
270	98-7732	1	Nut
275	100-1776	1	Nut
280	121-3809	1	Regulator ASM
290	120-5841	1	Clamp-Cord

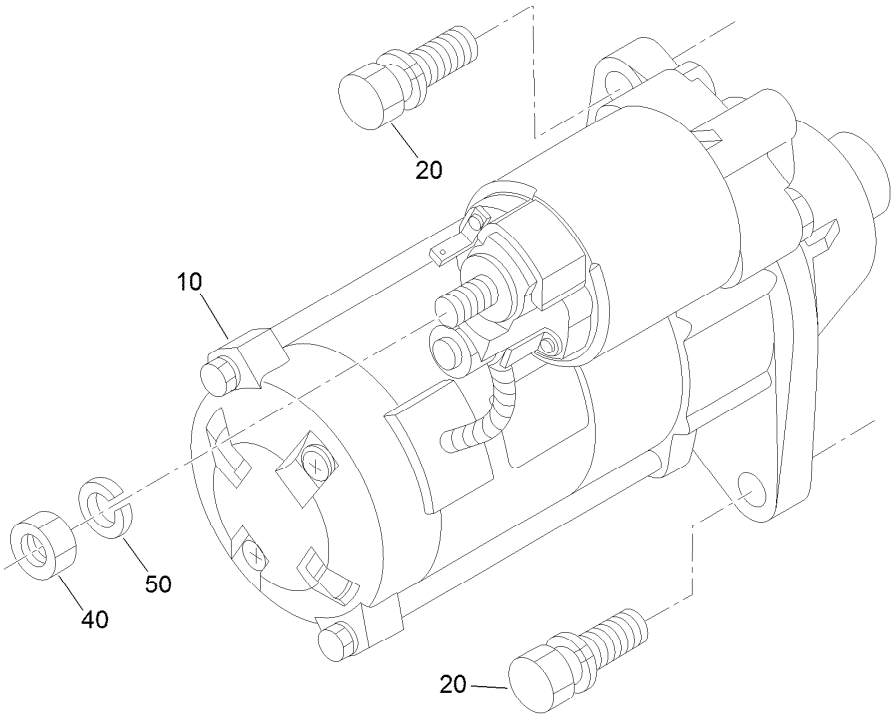

Starter Installation Assembly

Ref.	*Part Number*	*Qty.*	*Description*
10	127-0495	1	Starter ASM
20	98-7697	2	Bolt
40	98-7739	1	Nut
50	3253-4	1	Washer-Lock

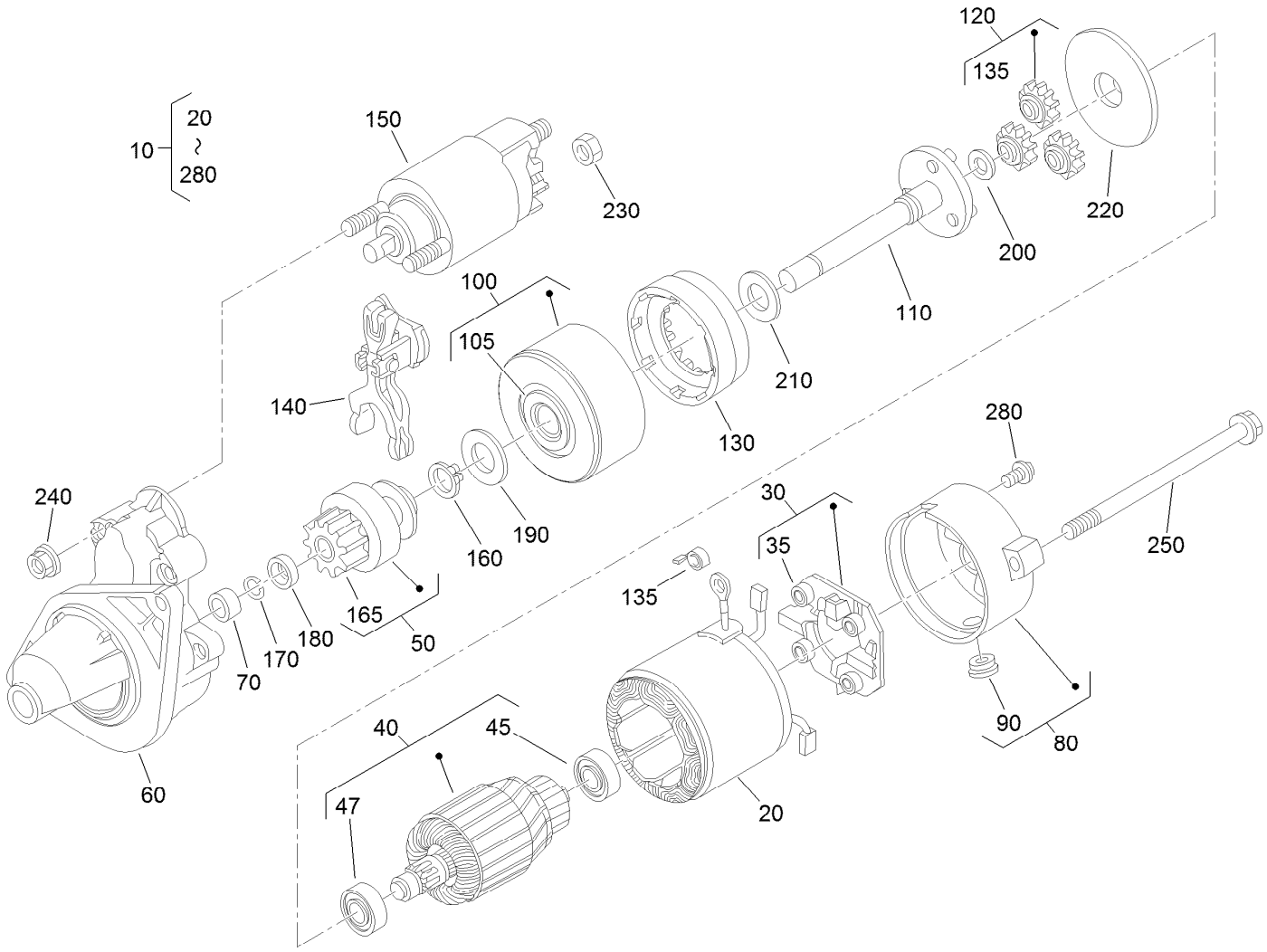

Starter Components Assembly

Ref.	Part Number	Qty.	Description
10	127-0495	1	Starter ASM
20	100-2181	1	Starter Yoke ASM
30	100-2222	1	Holder ASM
35	127-0415	4	Spring-Brush
40	100-2182	1	Armature ASM
45	98-9412	1	Bearing-Ball
47	98-9411	1	Bearing-Ball
50	100-2185	1	Starter Clutch ASM
60	127-0490	1	Starter Housing ASM
70	100-2183	1	Bearing
80	127-0449	1	Frame ASM
90	100-2213	1	Cover
100	100-2223	1	Bearing ASM
105	127-0414	1	Bearing
110	100-2187	1	Starter Shaft ASM
120	100-2220	3	Gear

Ref.	Part Number	Qty.	Description
130	100-2221	1	Gear
135	98-7750	4	Spring-Brush
140	100-2218	1	Lever
150	127-0448	1	Switch-Magnetic
160	100-2219	1	Ring-Snap
165	112-2833	1	Gear-Pinion
170	100-2212	1	Ring-Snap
180	100-2216	1	Collar
190	100-2224	1	Washer-Plain
200	100-2225	1	Washer-Plain
210	100-2226	1	Washer-Plain
220	100-2227	1	Plate
230	99-8371	1	Nut-Hex
240	100-1813	2	Nut
250	100-2210	2	Bolt-Through
280	100-2188	2	Screw

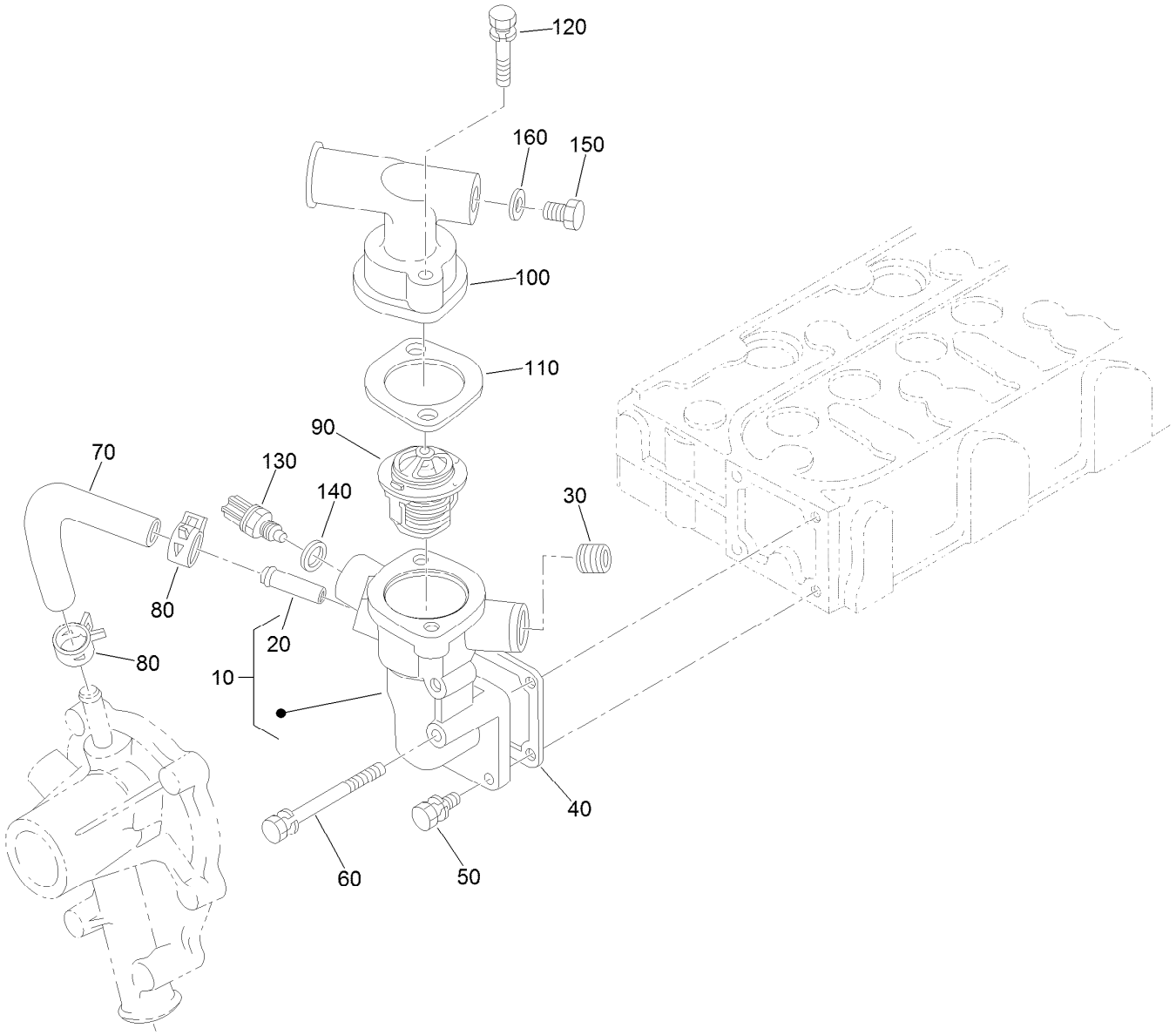

Water Flange and Thermostat Assembly

Ref.	Part Number	Qty.	Description
10	127-0435	1	Water Flange ASM
20	98-9580	1	Pipe-Return, Water
30	105-2874	1	Plug
40	98-9638	1	Gasket-Flange, Water
50	98-7692	3	Bolt
60	98-9356	1	Bolt
70	98-9578	1	Pipe-Return, Water
80	125-9078	2	Clamp-Hose

Ref.	Part Number	Qty.	Description
90	98-7778	1	Thermostat ASM
100	108-2869	1	Cover-Thermostat
110	105-3748	1	Gasket-Thermostat
120	98-7777	2	Bolt
130	125-9102	1	Sensor-Temperature, Water
140	127-0410	1	Washer-Seal
150	108-2870	1	Plug-Drain
160	100-9155	1	Gasket

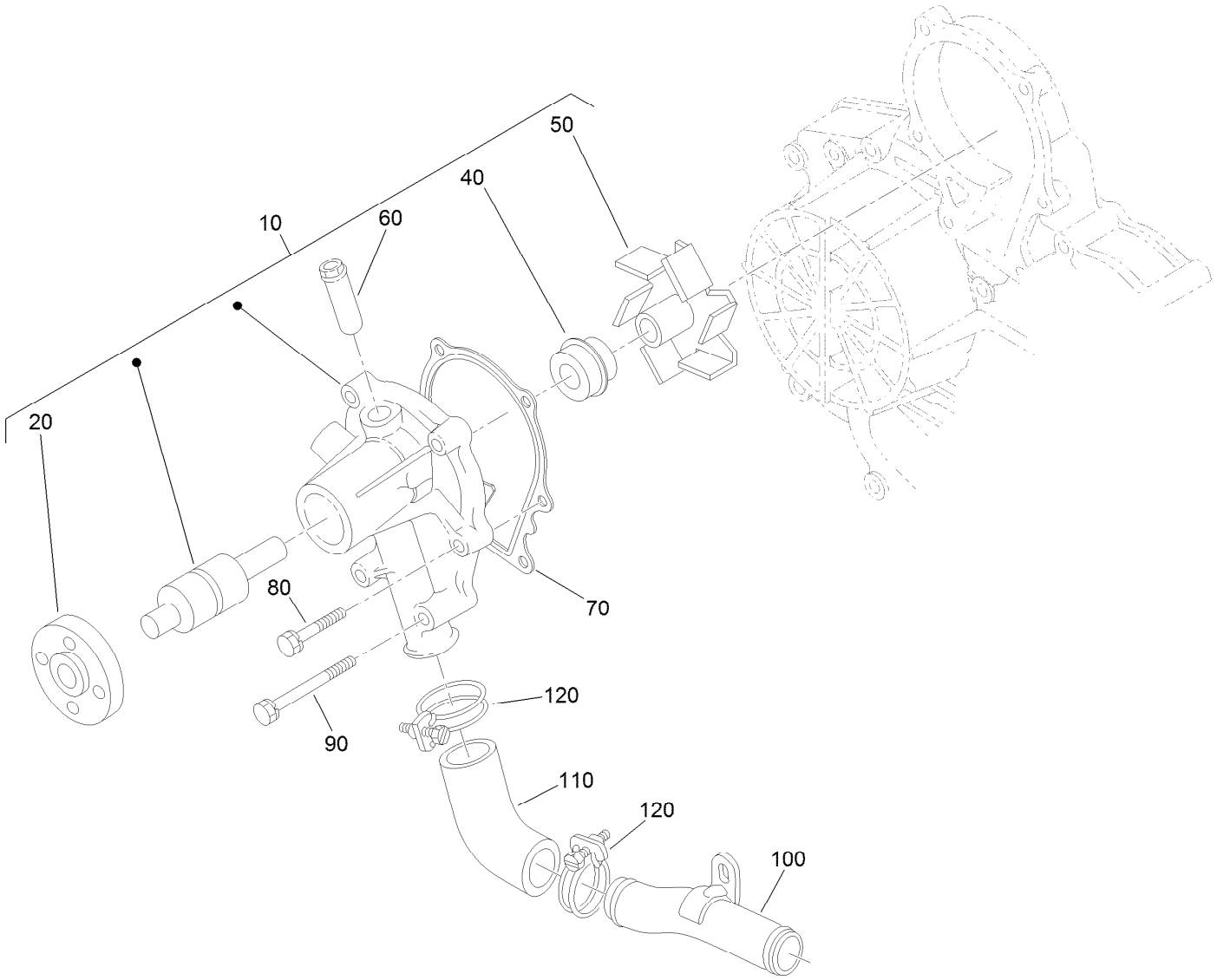

Water Pump Assembly

Ref.	*Part Number*	*Qty.*	*Description*
10	107-9089	1	Water Pump ASM
20	99-3516	1	Flange-Pump, Water
40	105-3750	1	Mechanical Seal ASM
50	112-7017	1	Impeller-Pump, Water
60	100-1932	1	Pipe-Return, Water
70	99-3454	1	Gasket-Pump, Water
80	98-9353	4	Bolt
90	107-9090	2	Bolt
100	98-9716	1	Pipe-Water
110	107-9091	1	Pipe-Water
120	127-0439	2	Clamp-Hose

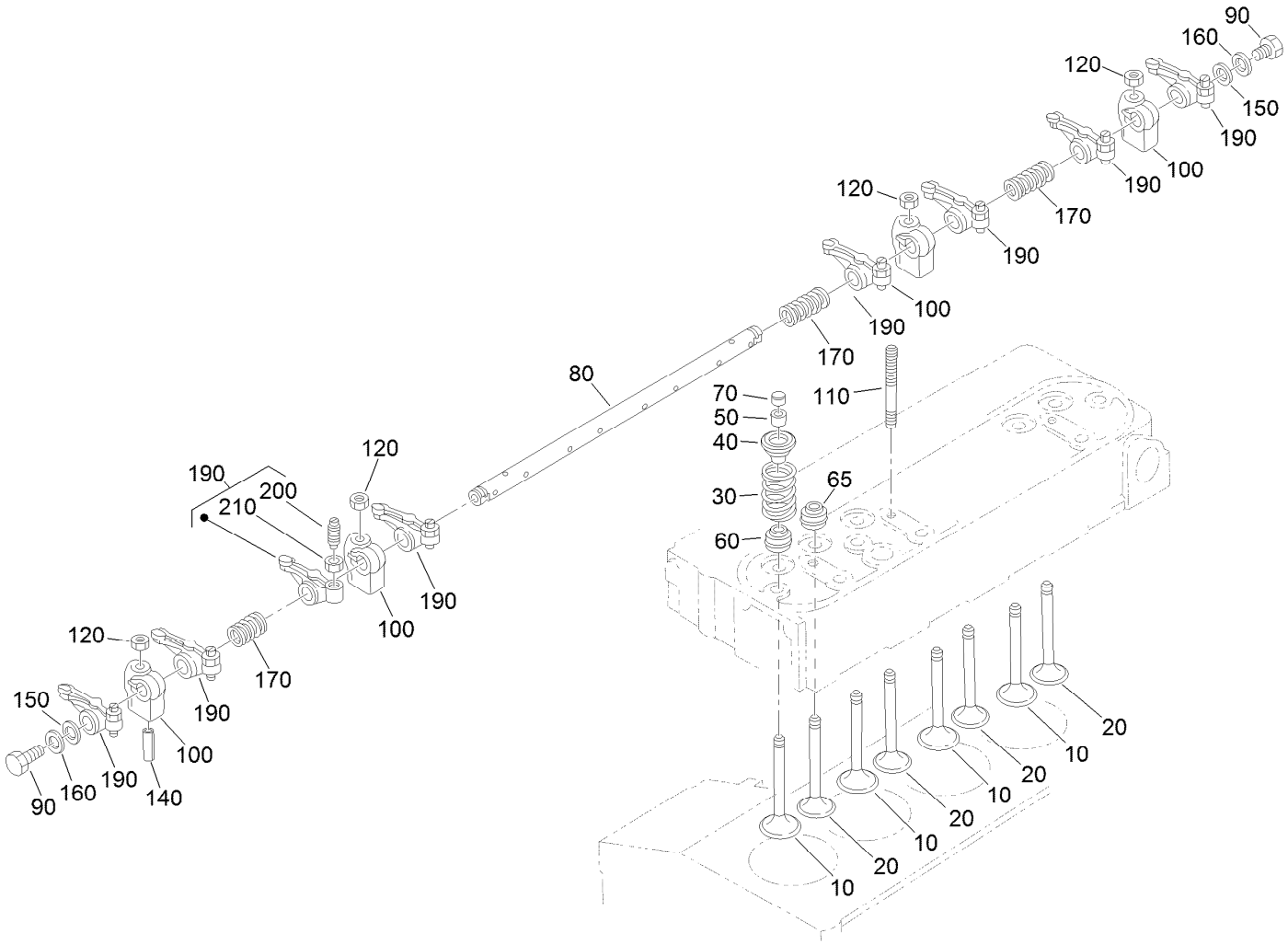

Valve and Rocker Arm Assembly

Ref.	Part Number	Qty.	Description
10	127-0475	4	Valve-Intake
20	127-0476	4	Valve-Exhaust
30	98-9626	8	Spring-Valve
40	107-9092	8	Retainer-Spring
50	117-7572	8	Collet-Spring, Valve
60	99-8385	4	Seal-Stem, Valve
65	127-0477	4	Seal-Stem, Valve
70	98-9497	8	Cap-Valve
80	127-0420	1	Shaft-Arm, Rocker
90	99-8363	2	Bolt-Flange

Ref.	Part Number	Qty.	Description
100	98-9505	4	Bracket-Arm, Rocker
110	98-9506	4	Stud
120	131-6563	4	Nut-Flange
140	105-3758	1	Pin-Spring
150	98-9507	2	Washer-Shaft, Rocker Arm
160	110-3832	2	Washer-Plain
170	98-9504	3	Spring-Arm, Rocker
190	112-7020	8	Rocker Arm ASM
200	98-9502	8	Screw-Adjusting
210	98-9503	8	Nut

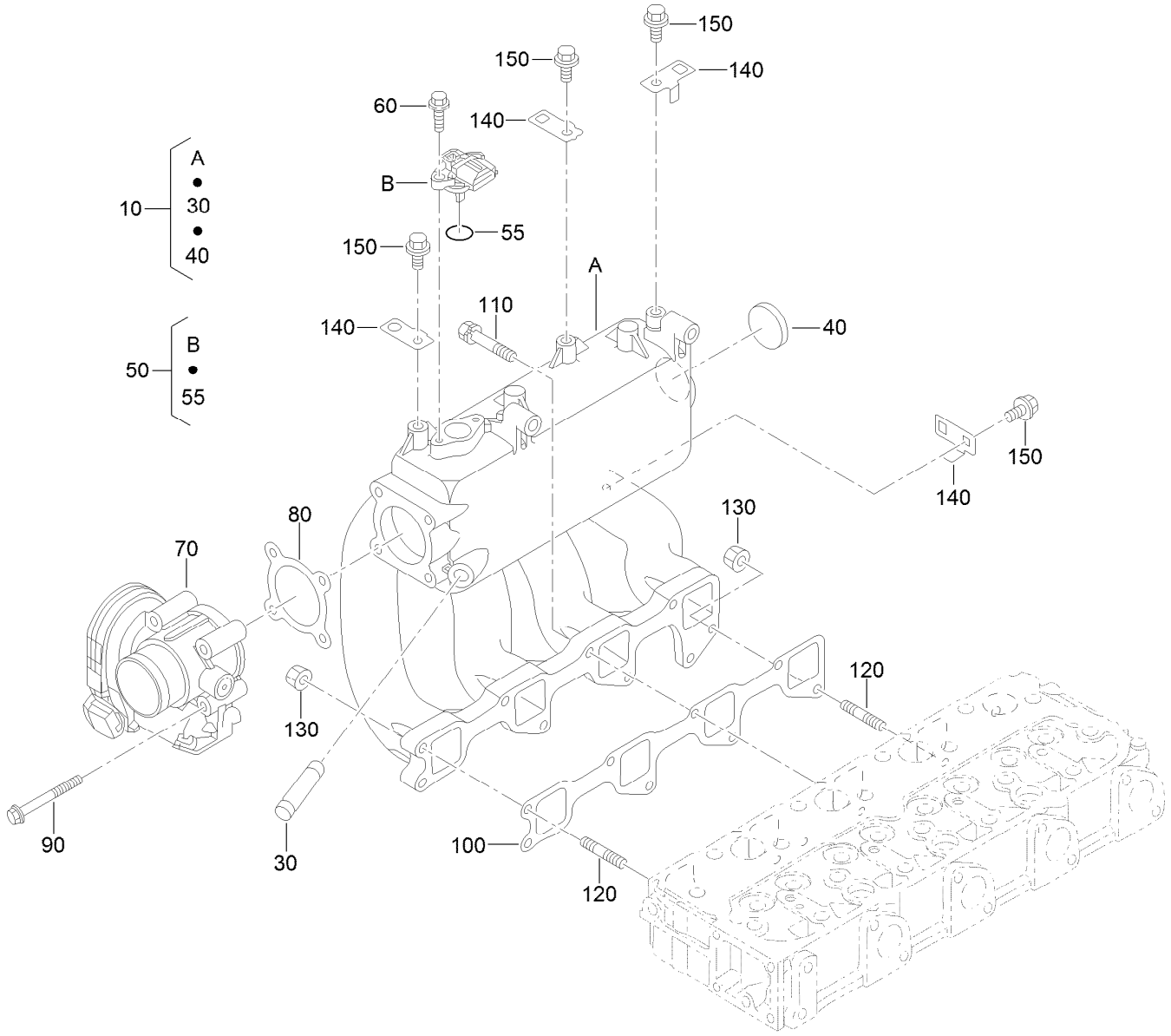

Inlet Manifold Assembly

Ref.	*Part Number*	*Qty.*	*Description*
10	127-0471	1	Manifold-Intake
30	127-0470	1	Joint-Tube, Breather
40	98-7539	1	Cap-Sealing
50	125-9110	1	Sensor (Tmap)
55	125-9112	1	O Ring
60	125-9111	2	Bolt-Flange
70	127-0492	1	Throttle Body ASM
80	127-0493	1	Gasket-Throttle
90	127-0405	1	Bolt-Flange
100	127-0472	1	Gasket-Intake
110	98-9352	6	Bolt
120	125-9092	2	Stud
130	100-2203	2	Nut-Flange
140	127-0496	4	Bracket-Harness
150	100-1774	4	Bolt-Flange

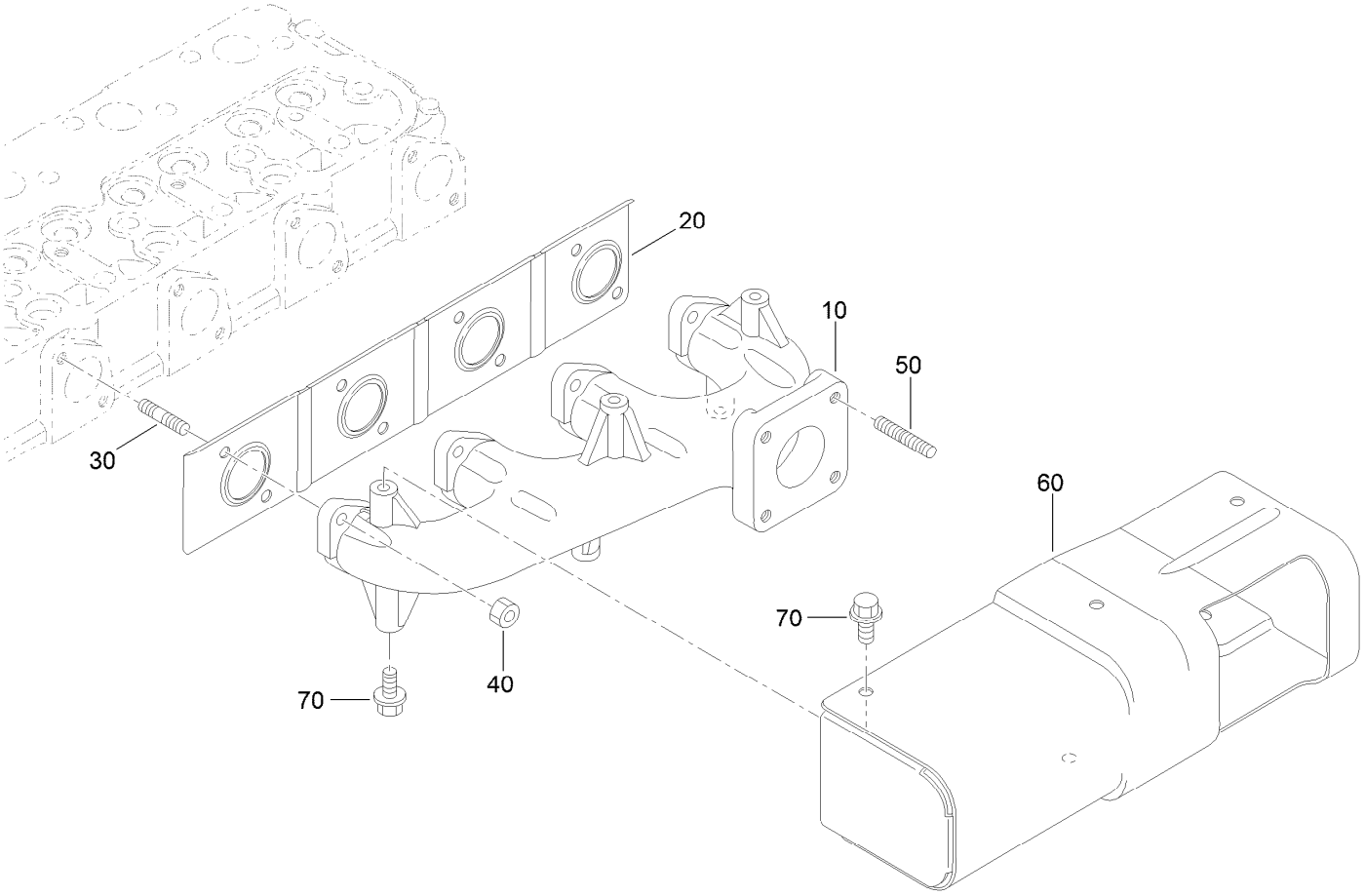

Exhaust Manifold Assembly

Ref.	*Part Number*	*Qty.*	*Description*
10	131-9592	1	Manifold-Exhaust
20	127-0474	1	Gasket-Manifold, Exhaust
30	127-0507	8	Stud
40	98-9665	8	Nut
50	127-0446	4	Stud
60	131-9593	1	Cover-Exhaust
70	99-8363	6	Bolt-Flange

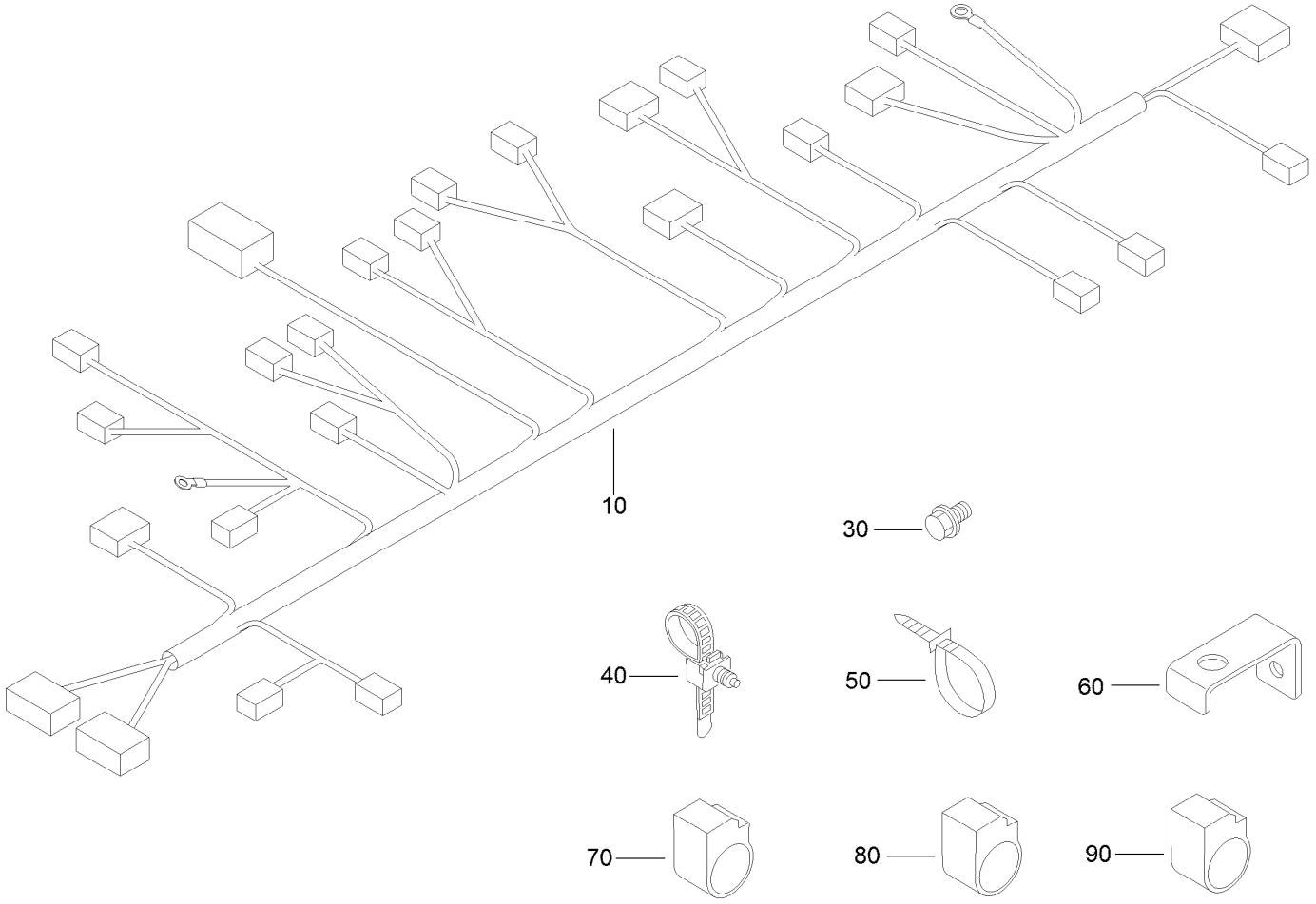

Wire Harness Assembly

Ref.	*Part Number*	*Qty.*	*Description*
10	147-0610	1	Wire Harness & Fusebox ASM
30	115-8504	1	Bolt-Flange
40	127-0515	1	Clamp
50	127-0447	4	Band-Cord
60	127-0497	1	Bracket-Harness
70	127-0514	1	Clamp
80	127-0513	2	Clamp
90	127-0512	1	Clamp

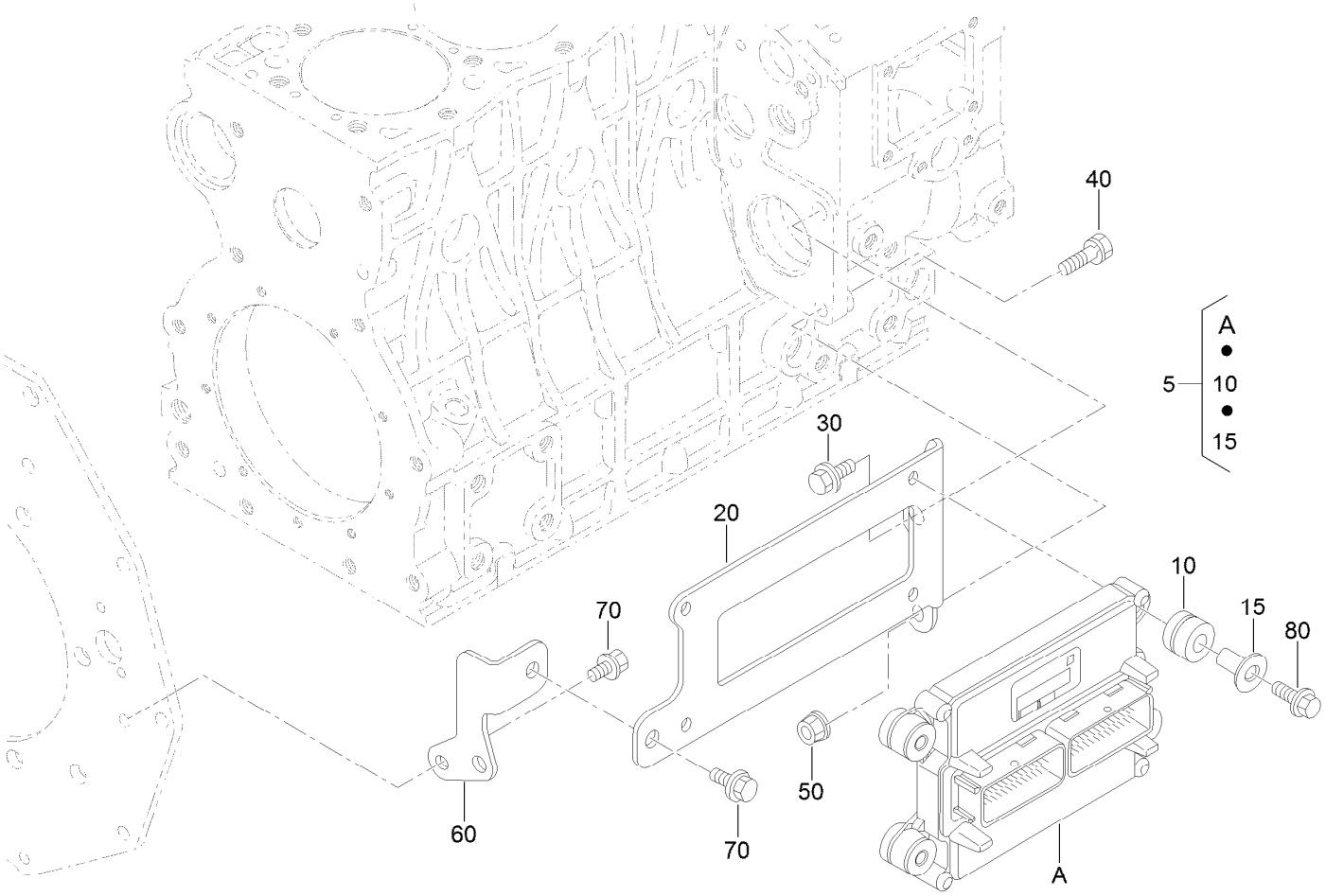

Electronic Control Unit Assembly

Ref.	*Part Number*	*Qty.*	*Description*
5	133-2789	1	Electronic Control Unit ASM
10	127-0501	4	Rubber-Cushion
15	127-0500	4	Spacer (E C U)
20	127-0502	1	Stay-E C M
30	127-0406	1	Bolt-Flange
40	98-7697	1	Bolt
50	112-2492	1	Nut-Flange
60	127-0503	1	Stay-E C M
70	115-8504	2	Bolt-Flange
80	125-9094	4	Bolt-Flange

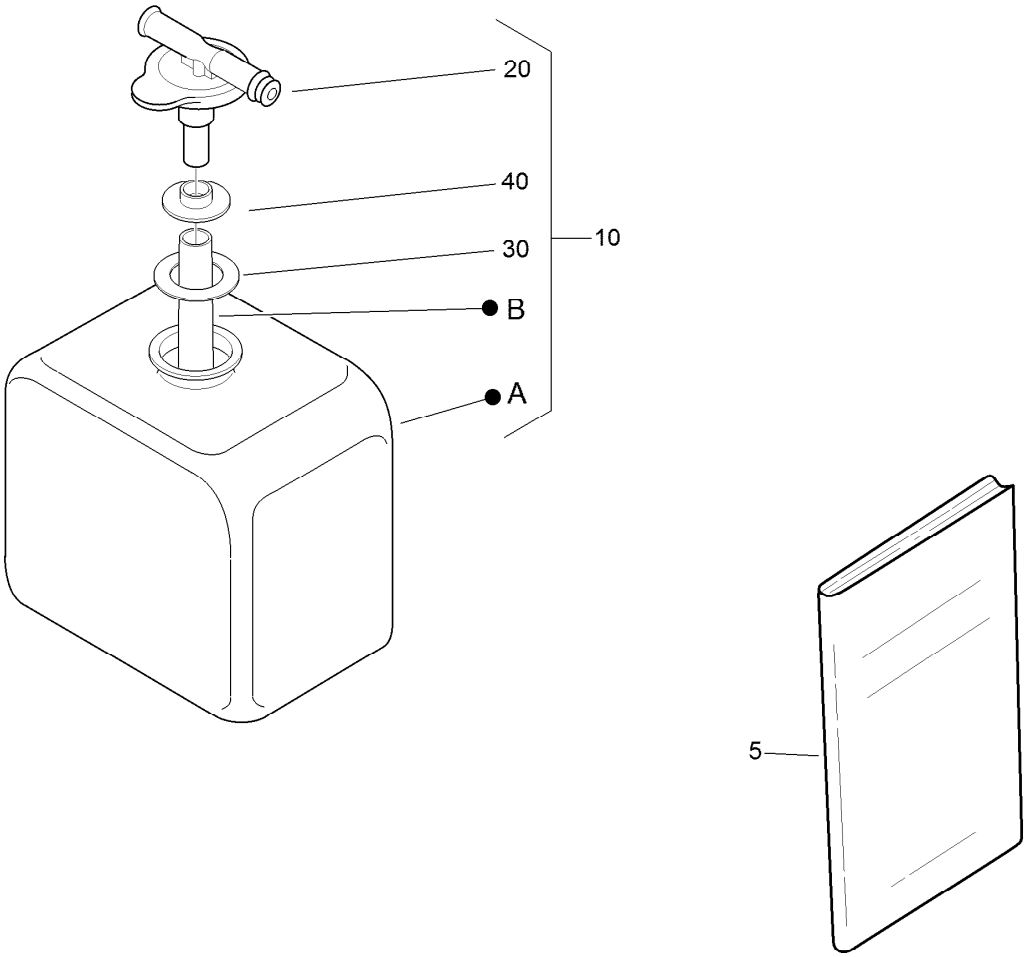

Miscellaneous Engine Parts

Ref.	*Part Number*	*Qty.*	*Description*
5	136-2287	1	Manual-Owners
10	108-0638	1	Bottle-Overflow
20	105-3754	1	Cap
30	105-3755	1	Gasket
40	105-3756	1	Plate

Attachments and Accessories

For 41394GK — Multi Pro 5800 Turf Sprayer with GeoLink Precision Spray System

Product Name	Model/Part
Premium All Season Hydraulic Fluid (55 Gallon Drum)	108-1177
Premium All Season Hydraulic Fluid (5 Gallon Pail)	108-1178
Premium Heavy Duty All Season Gear Lube (Pail)	108-1188
Premium All Purpose Grease (Tube)	108-1190
Premium Heavy Duty All Season Gear Lube (Quart)	108-1591
Spark Arrestor	115-2919
Tire	119-6021
Beacon Kit	120-8505
License Plate Kit	120-8506
Covered Boom Spring Upgrade Kit	120-8508
Premium Engine Oil 10w30 (55 Gallon Drum)	121-6392
Premium Engine Oil 10w30 (5 Gallon Pail)	121-6393
Wheel And Tire Asm	127-1100
Lance Suction Assembly	127-9826
Ultra Sonic Boom Finishing Kit	130-8229
Right Hand Step Kit	130-8230
Left Hand Step Kit	130-8231
Finishing Kit, Foam Marker for Serial Number 315000001 and After Multi Pro 5800 Turf Sprayer	136-0458
CE Kit, Multi Pro 5800-G Turf Sprayer	144-6200
Rear Work Light Kit	41010
Single Nozzle Kit	41023
Hand Spray Wand Kit	41118
Pro Foam Concentrate (4 x 1 Gallon)	41157
Nozzalert - Mp Nozzle Flow System	41166
Ultra Sonic Boom Leveling Kit	41219
Foam Marker Kit	41249
Drift Reduction Boom Shroud Kit	41602
Pro-Foam	41607
Tank Rinse Kit	41614
Pivoting Hose Reel Kit	41621
Eductor Kit	41622
TNL Reference Antenna Kit, MR-2	41635

Notes:

Notes:



Count on it.