Form No. 3476-426 Rev A

TORO®

Count on it.

Parts Catalog

21in Super Recycler®

Lawn Mower

Model No. 21565CA—Serial No. 400000000 and Up

Register at www.Toro.com.
Original Instructions (EN)

3476-426 A

Ordering Replacement Parts

To order replacement parts, please supply the part number, the quantity, and the description of each part desired.

Understanding Reference Numbers

Each identified part in an illustration has a reference number. The reference number for a part also appears in the parts list, along with other information about the part.

This catalog uses two special reference number formats, one to indicate parts in a service assembly and another to indicate the quantity of a given part in an illustration.

Service Assembly Reference Numbers

Parts in service assemblies have reference numbers in the form a:b. The a represents the reference number of the entire service assembly and the b represents a sequential number unique to each part within the service assembly.

For example, a wheel assembly might be identified by reference number 6, the tire by 6:1, the valve by 6:2, and the wheel by 6:3. When you order the assembly identified by reference number 6, you receive all parts identified by reference numbers 6:1,6:2, and 6:3. However, you may also order any part individually. Reference numbers of this type appear in illustration and in parts lists.

Reference Numbers Indicating Quantity

In an illustration, if a reference number indicates more than one part, the reference number has the form nX y. The n represents the quantity of the part, the X is the multiplication symbol, and the y represents the reference number.

For example, in an illustration, the reference number 2X 37 means that two of the parts identified by reference number 37 are indicated.

Contents

Housing Assembly 4
Rear Bag Assembly 6
Deck Decal Assembly 8
Engine and Muffler Assembly 10
Front Wheel and Height-of-Cut Assembly 12
Rear Wheel and Height-of-Cut Assembly 14
Handle Assembly 16
Attachments and Accessories 18

© 2025—The Toro® Company
8111 Lyndale Avenue South
Bloomington, MN 55420

Contact us at www.Toro.com.
Printed in the USA.
All Rights Reserved

Housing Assembly

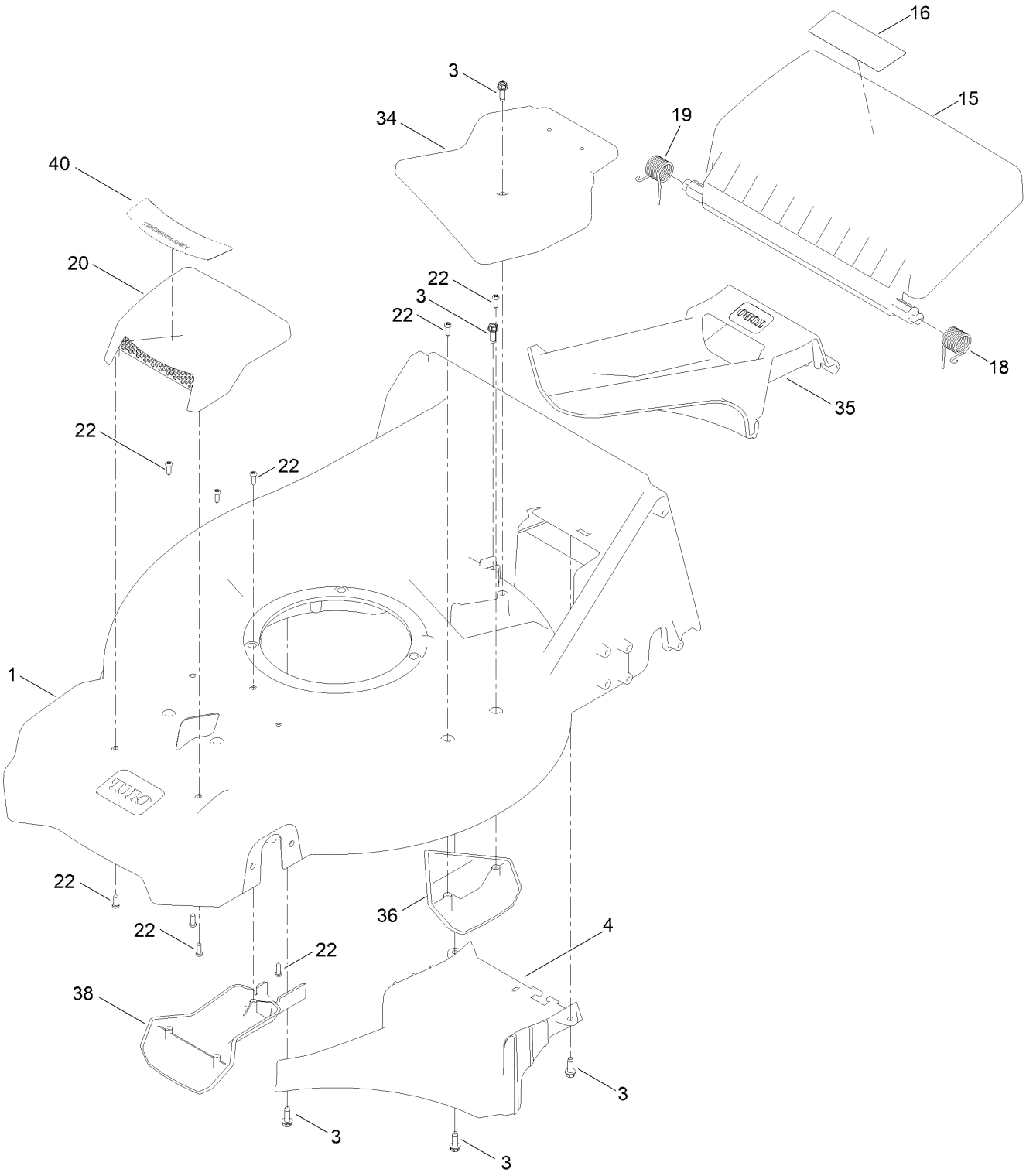

Housing Assembly (continued)

Ref.	Part Number	Qty.	Description
1	145-5835	1	Housing ASM
3	49-2040	5	Screw-HWHTF
4	144-0233	1	Ramp-Discharge
15	139-5477	1	Door-Rear
16	131-4514	1	Decal-Warning
18	139-5478	1	Spring-Torsion, LH
19	139-5479	1	Spring-Torsion, RH
20	144-6531	1	ASM-Cover, Top Intake
22	139-1703	9	Screw-Plastic, PPH
34	144-0234	1	Cover-Belt, Top
35	144-0236	1	Plug-Mulch
36	144-0237	1	Kicker-Housing
38	144-6464	1	Cover-Intake, Bottom
40	145-5600	1	Decal-Cover, Intake

Rear Bag Assembly

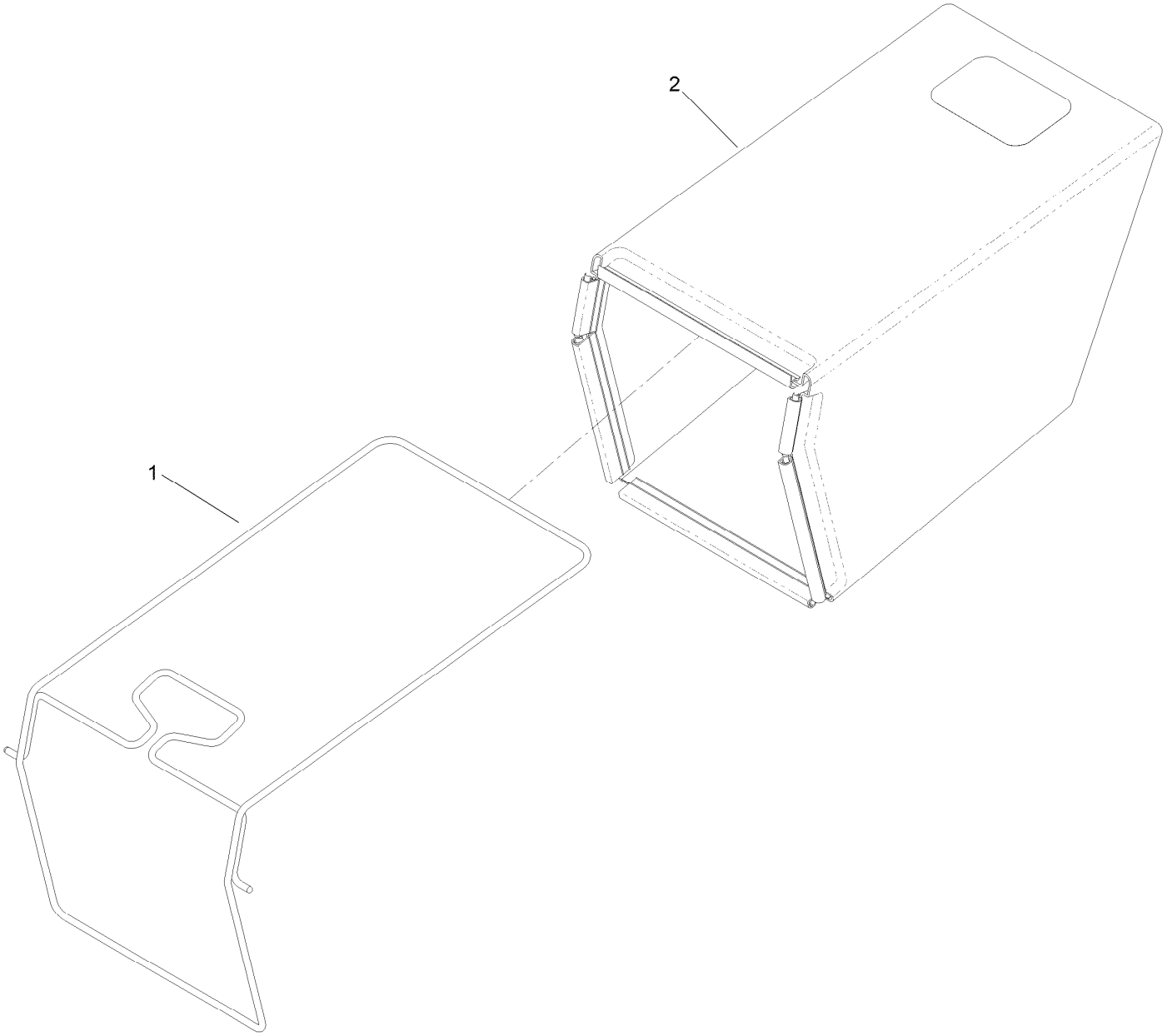

Rear Bag Assembly (continued)

Ref.	*Part Number*	*Qty.*	*Description*
1	139-5470-03	1	ASM-Frame, Bag
2	144-6509	1	ASM-Bag, Grass

Deck Decal Assembly

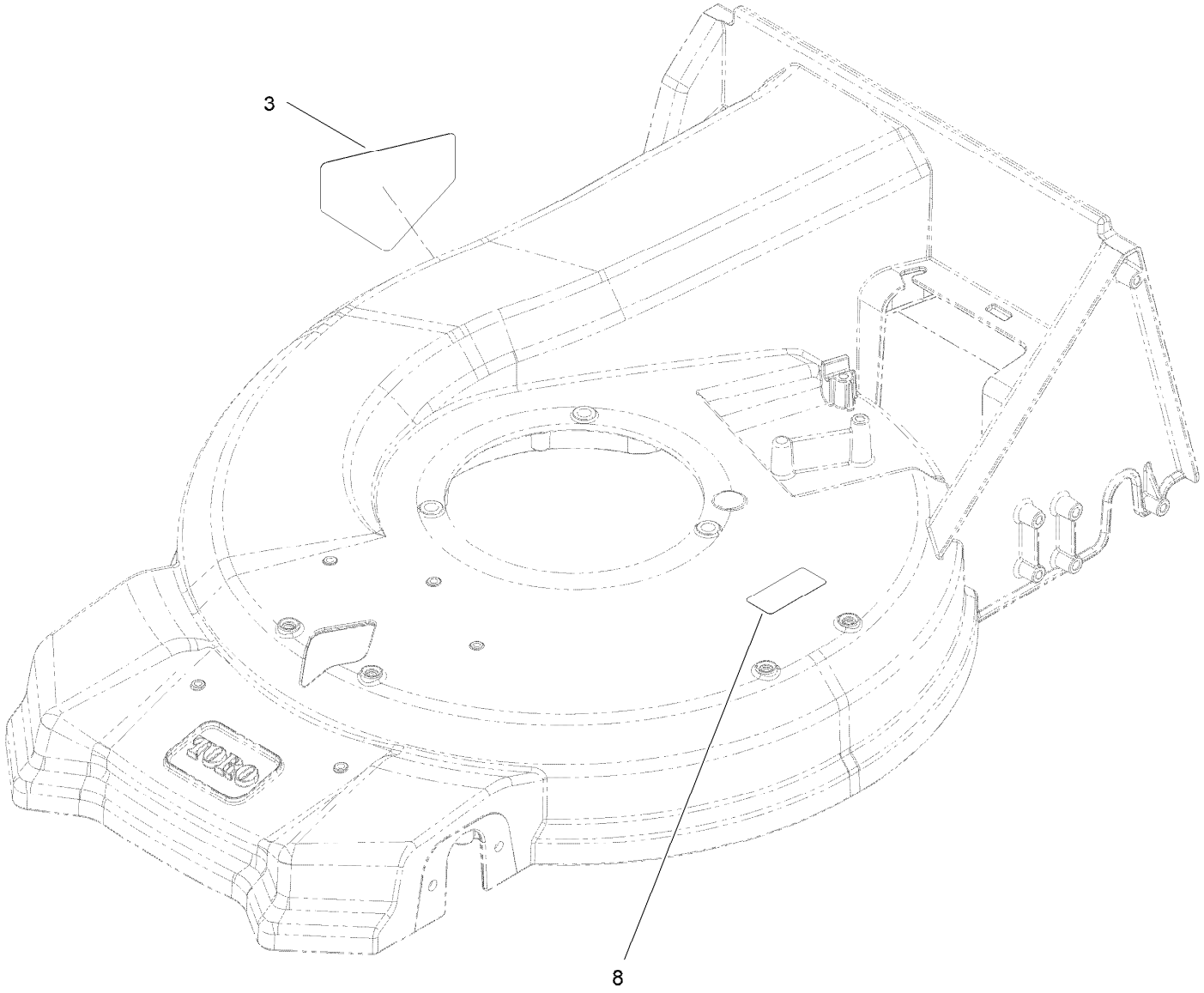

Deck Decal Assembly (continued)

Ref.	*Part Number*	*Qty.*	*Description*
3	147-9420	1	Decal-Danger
8	121-5684	1	Decal-Location, Service Dealer

Engine and Muffler Assembly

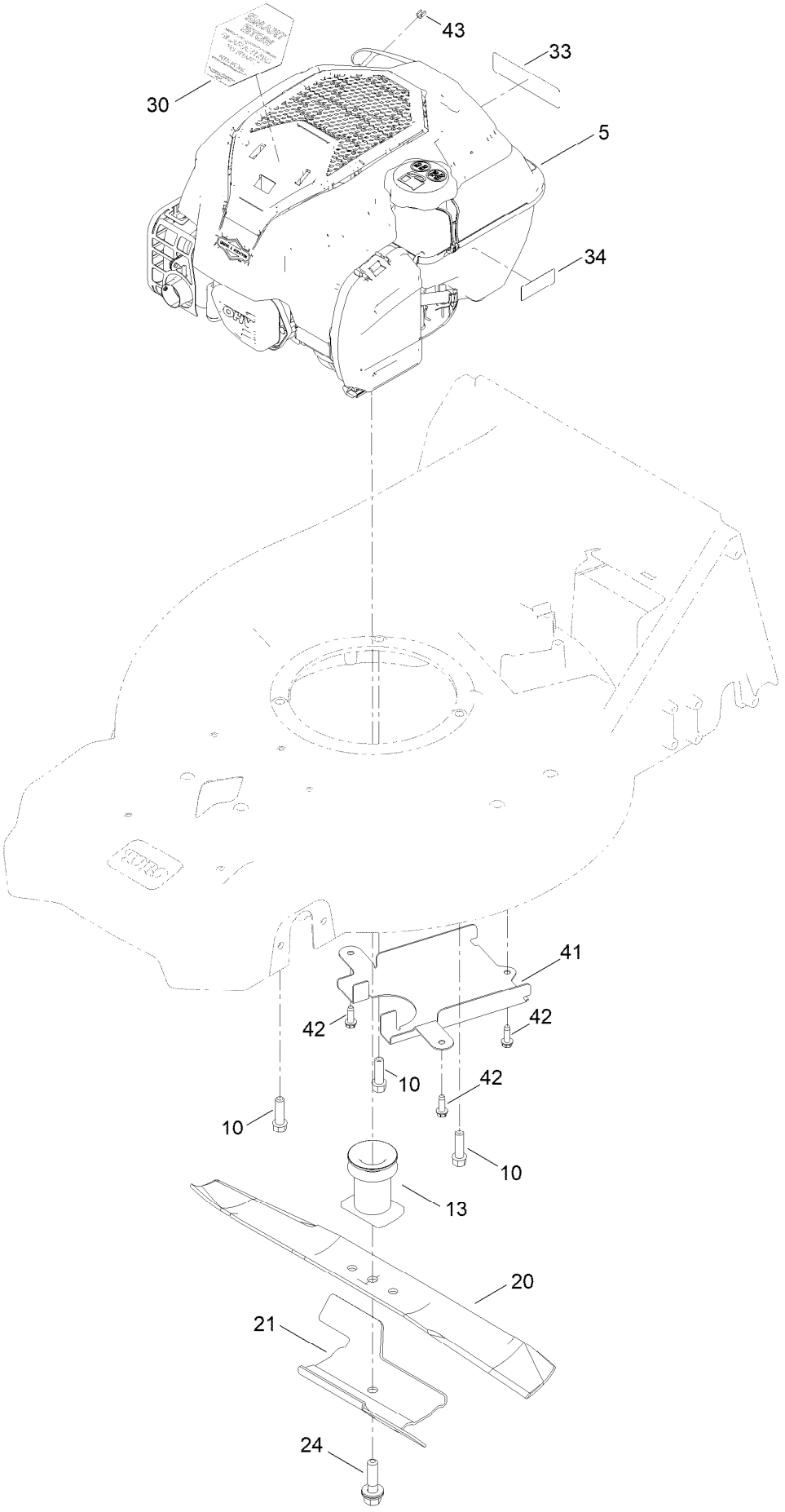

Engine and Muffler Assembly (continued)

Ref.	Part Number	Qty.	Description
5		1	Engine-Briggs 104M020254Z1 ■●
10	95-1727	3	Screw-Taptite
13	139-1816	1	Driver-Blade
20	133-8183-03	1	Blade-Recycling 21In (Bagging)
21	105-6848-01	1	Accelerator-Blade
24	125-2466	1	Bolt-Blade
30	145-5603	1	Decal-Briggs 725 Exi SS
33	133-8062	1	Decal-Spark Arrestor
34	133-8198	1	Decal-Level, Fuel
41	144-0238-05	1	Cover-Belt, Bottom
42	49-2040	3	Screw-HWHTF
43	2210-316	1	Stop-Rope

● Not serviced separately

■ Obtain parts from www.briggsandstratton.com

Front Wheel and Height-of-Cut Assembly

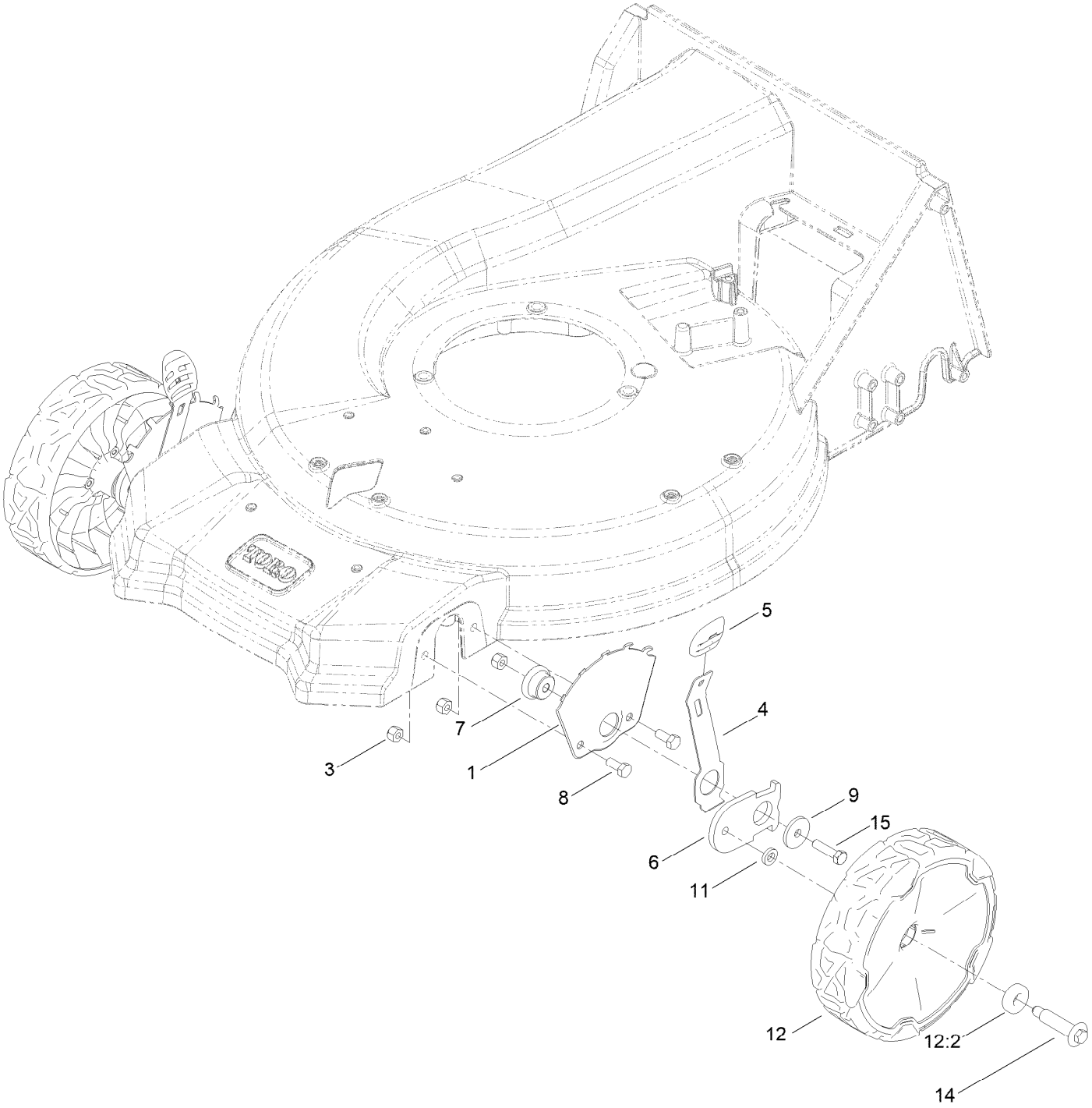

Front Wheel and Height-of-Cut Assembly (continued)

Ref.	Part Number	Qty.	Description
1	115-1956-05	2	Plate-HOC,Front Fsvq
3	3296-29	6	Nut-Lock, NI
4	105-1809	2	Arm-Spring
5	105-3042	2	Knob-Lever, HOC
6	137-9128	2	Arm-Pivot, Front
7	105-1818	2	Bushing-Mount, HOC
8	322-3	4	Screw-HH
9	105-3048	2	Washer-Flat
11	139-5449	2	Washer-Wheel Bolt
12	144-6469	2	ASM-Wheel, 8" (Bearings)
12:2	52-2450	2	Bearing-Wheel
14	145-3899	2	Wheel Bolt
15	322-6	2	Screw-HH

Rear Wheel and Height-of-Cut Assembly

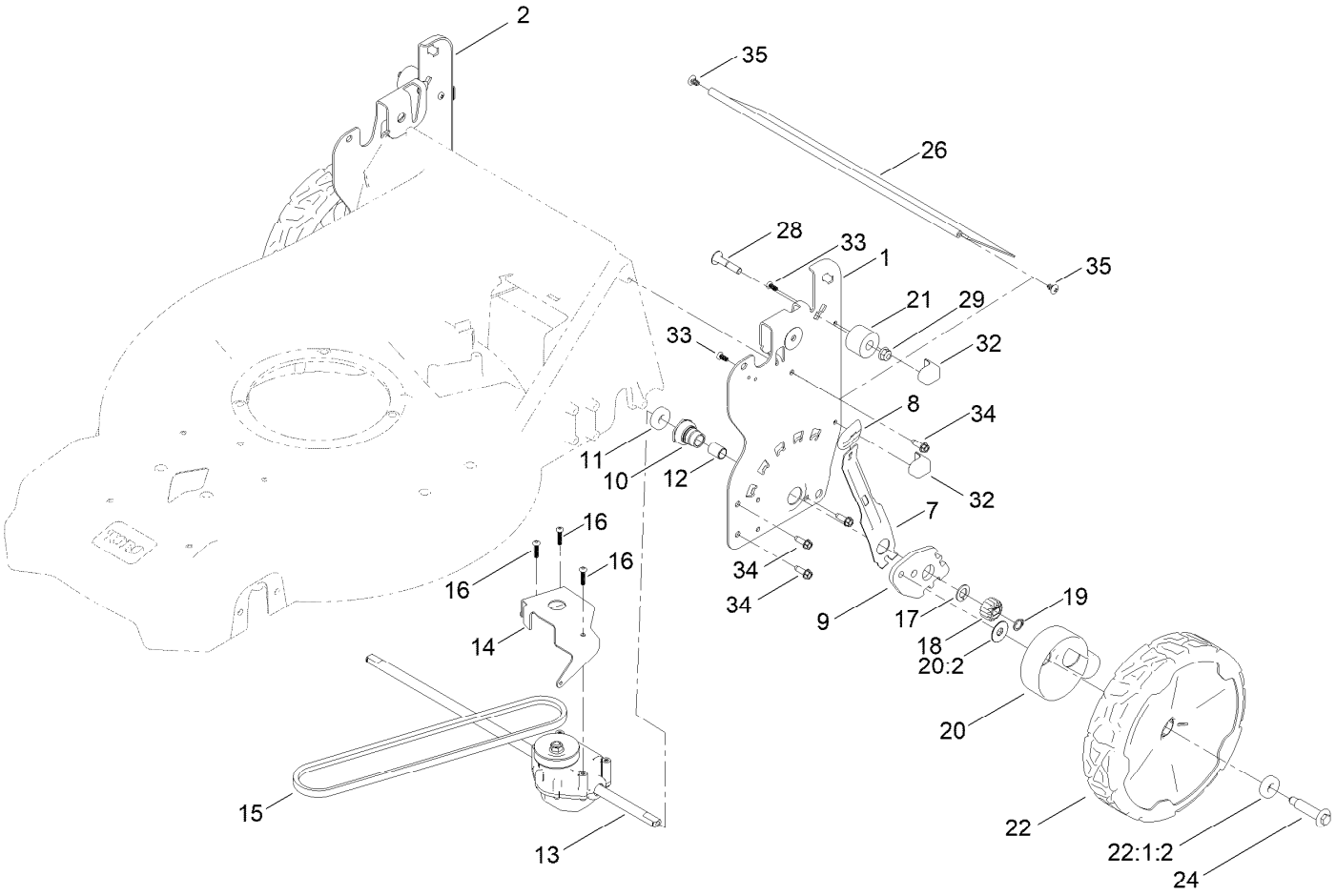

Rear Wheel and Height-of-Cut Assembly (continued)

Ref.	Part Number	Qty.	Description
1	145-5651-05	1	Plate-HOC, LH (ISO)
2	145-5650-05	1	Plate-HOC, RH (ISO)
7	132-4486	2	Arm-Spring
8	105-3042	2	Knob-Lever, HOC
9	139-5451	2	Arm-Pivot, Rear
10	108-9779	2	Retainer-Bushing, HOC
11	52-2450	2	Bearing-Wheel
12	108-9782	2	Bushing-Sleeve
13	144-0248	1	Transmission-Rwd, 5.25:1
14	132-4481-03	1	Bracket-Trans, Rwd Hi
15	115-4669	1	Belt-V
16	108-7476	3	Screw-Plastite
17	110-7191	2	Washer-Thrust
18	131-5399	2	Gear-Pinion, 15T
19	32151-61	2	Ring-Retaining
20	144-0240	2	ASM-Cover, Gear
20:2	614426	1	Washer-Stepped
21	144-0218	2	Bumper-Isolator
22	144-6474	2	ASM-9.65" Wheel, Geared
22:1:2	52-2450	2	Bearing-Wheel
24	145-3899	2	Wheel Bolt
26	139-6597	1	Shield-Trailing
28	144-6540	2	Screw-CARR-Spcl
29	104-8300	2	Nut-HF, NI
32	140-2369	4	Pad-Smart Stow
33	107-7461	4	Screw-Plastite
34	49-2040	8	Screw-HWHTF
35	139-1692	2	Screw-PTH

Handle Assembly

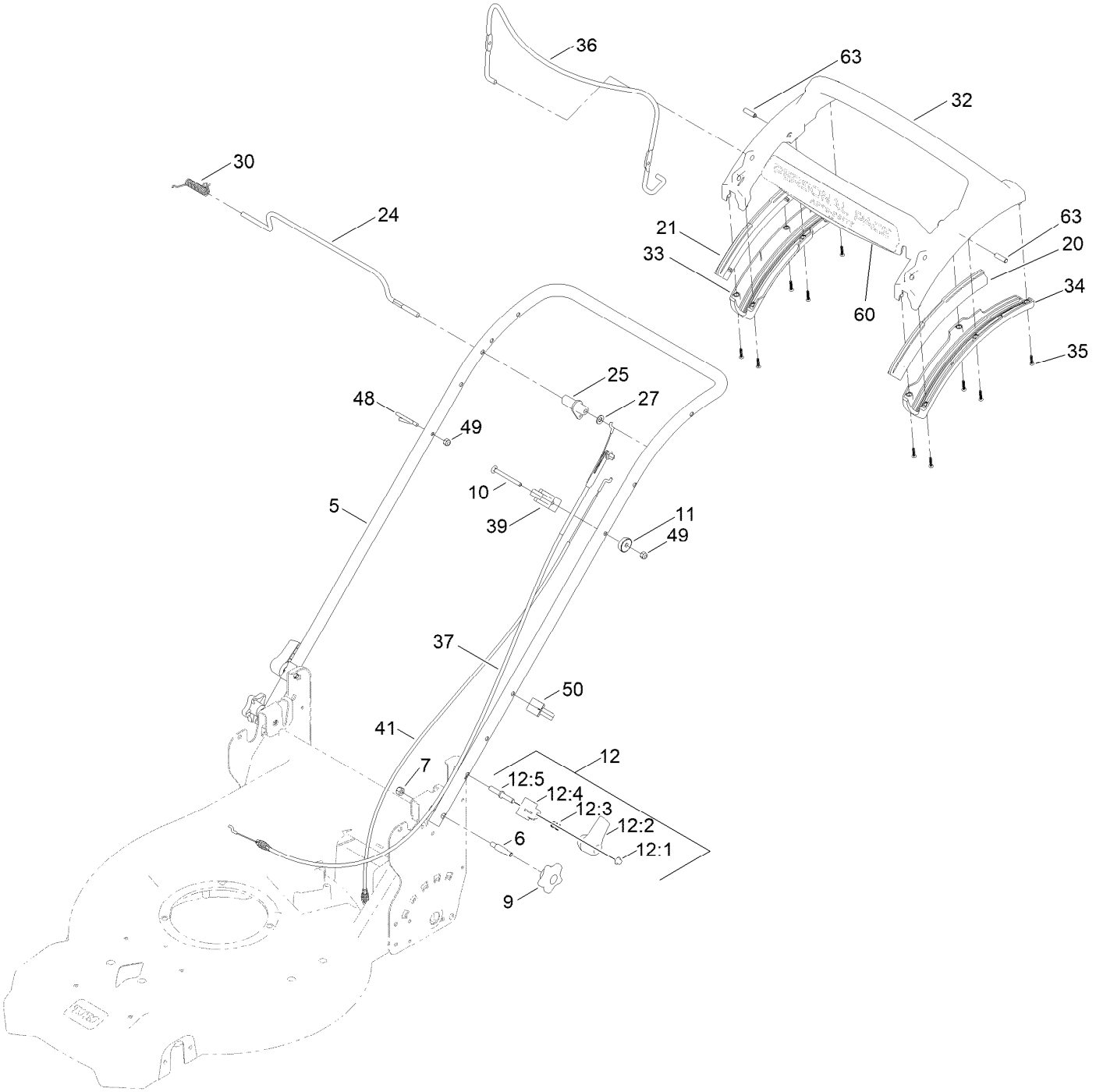

Handle Assembly (continued)

Ref.	Part Number	Qty.	Description
5	144-6516-05	1	Handle-Curved
6	139-6588	2	Bolt-Shoulder, Handle
7	3296-29	2	Nut-Lock, NI
9	117-5976	2	Knob-Handle
10	144-0221	1	Screw-CARR
11	136-9075	1	Washer-Curved
12	138-3249	2	Quick Release ASM
12:1	140-4157	1	Nut-Push
12:2	138-3248	1	Lever-Release
12:3	138-3253	1	Anchor-Spring
12:4	115-2858	1	Spring-Compression
12:5	140-4158	1	Rod-Release
20	140-2367	1	Guide-Curved, LH (Rwd)
21	140-2366	1	Guide-Curved, RH (Rwd)
24	139-5464	1	Rod-Control, Traction
25	139-6554	1	Lever-Traction, Rwd
27	3256-23	1	Washer-Plain
30	140-4194	1	Spring-Torsion
32	139-6569	1	Handle-Personal Pace, Curved
33	139-6567	1	Bottom-Handle, RH
34	139-6568	1	Bottom-Handle, LH
35	94-4496	10	Screw-PPH
36	145-5879-03	1	Bail-Brake
37	139-6594	1	Cable-Brake, Pp B&s
39	139-6581	1	Anchor-Cable, Rwd
41	139-6595	1	Cable-Traction, Rwd (Pp)
48	86-9671	1	Guide-Rope
49	137-3094	2	Nut-Hex
50	114-7988	1	Guide-Cable
60	145-5601	1	Decal-Handle, Pp
63	139-6577	2	Pin-Handle, Pp

Attachments and Accessories

For 21565CA 21in Super Recycler Lawn Mower

Product Name	Model/Part
Discharge Chute ASM	144-0242
Lawnmower Cover	490-7462
Smart Stow Walk Power Mower Cover	490-2012
Lawn Striping Kit with 22in Roller	20601
Bagging Blade	108-3759-03
Bag-Walk Behind (Toro)	490-7318
Briggs Maint Kit	130-8148
Fuel Stabilizer .05 oz	130-2393
Toro Premium Fuel Treatment 12oz Bottle	131-6572
4-Cycle Fuel, Snow And Lawn 32oz Can	131-3823
Oil-30/10W-30 Synthetic (Quart)	138-6053
Summer Oil-Case of 24 (20oz Bottles)	38916

Notes:



Count on it.