Form No. 3444-712 Rev D

TORO®

Count on it.

Operator's Manual

Flex-Force Power System® 60V MAX 22in Recycler® Lawn Mower

Model No. 21467—Serial No. 400000000 and Up
Model No. 21467T—Serial No. 400000000 and Up

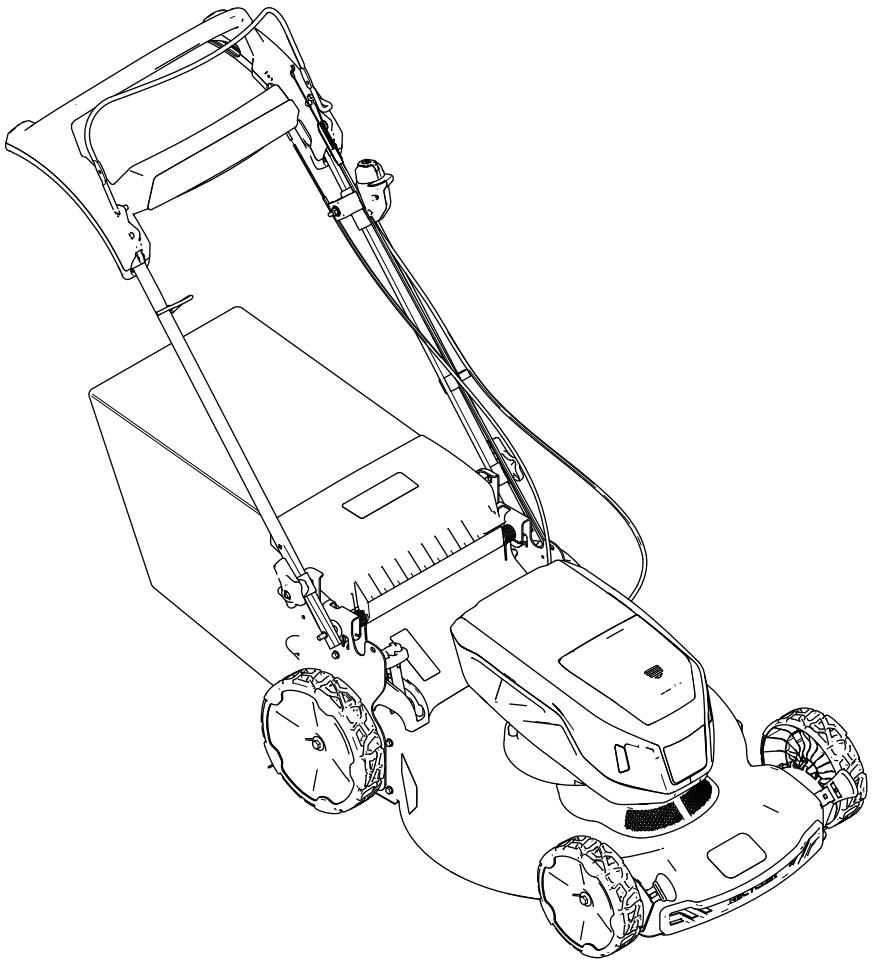

Register at www.Toro.com.
Original Instructions (EN)

3444-712

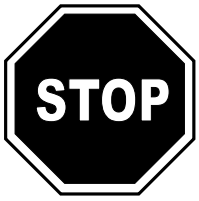

For assistance, please see www.Toro.com/support for instructional videos or contact 1-888-384-9939 before returning this product.

⚠ WARNING

CALIFORNIA
Proposition 65 Warning

The power cord on this product contains lead, a chemical known to the State of California to cause birth defects or other reproductive harm. Wash hands after handling.

Use of this product may cause exposure to chemicals known to the State of California to cause cancer, birth defects, or other reproductive harm.

Introduction

This rotary-blade, walk-behind lawn mower is intended to be used by residential homeowners. It is designed primarily for cutting grass on well-maintained lawns on residential properties. It is not designed for cutting brush or for agricultural uses. It is designed to use Toro 60V lithium-ion battery packs. These battery packs are designed to be charged only by Toro 60V lithium-ion battery chargers. Using these products for purposes other than their intended use could prove dangerous to you and bystanders.

Model 21467T does not include a battery or a charger.

Read this information carefully to learn how to operate and maintain your product properly and to avoid injury and product damage. You are responsible for operating the product properly and safely.

Visit www.Toro.com for more information, including safety tips, training materials, accessory information, help finding a dealer, or to register your product.

Whenever you need service, genuine Toro parts, or additional information, contact an Authorized Service Dealer or Toro Customer Service and have the model and serial numbers of your product ready. Figure 1 identifies the location of the model and serial numbers on the product. Write the numbers in the space provided.

Important: **With your mobile device, you can scan the QR code on the serial number decal (if equipped) to access warranty, parts, and other product information.**

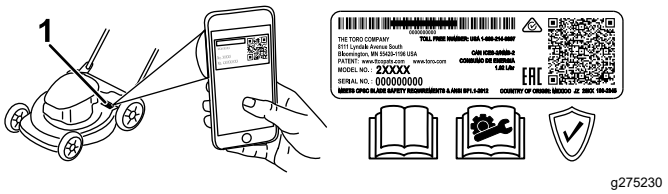

g275230

Figure 1

1. Model and serial number location

Model No. _____

Serial No. _____

Safety-Alert Symbol

The safety-alert symbol (Figure 2) shown in this manual and on the machine identifies important safety messages that you must follow to prevent accidents.



g000502

Figure 2
Safety-alert symbol

The safety-alert symbol appears above information that alerts you to unsafe actions or situations and is followed by the word **DANGER**, **WARNING**, or **CAUTION**.

DANGER indicates an imminently hazardous situation which, if not avoided, **will** result in death or serious injury.

WARNING indicates a potentially hazardous situation which, if not avoided, **could** result in death or serious injury.

CAUTION indicates a potentially hazardous situation which, if not avoided, **may** result in minor or moderate injury.

This manual uses two other words to highlight information. **Important** calls attention to special mechanical information and **Note** emphasizes general information worthy of special attention.

© 2025—The Toro® Company

All Rights Reserved

Safety

IMPORTANT SAFETY INSTRUCTIONS

⚠ WARNING

When using electric lawn mowers, basic safety precautions should always be followed to reduce the risk of fire, electric shock, and personal injury, including the following:

Read All Instructions

I. Training

1. The operator of the machine is responsible for any accidents or hazards occurring to others or their property.
2. Do not allow children to use or play with the machine, battery pack, or the battery charger; local regulations may restrict the age of the operator.
3. Do not allow children or untrained people to operate or service this device. Allow only people who are responsible, trained, familiar with the instructions, and physically capable to operate or service the device.
4. Before using the machine, battery pack, and battery charger, read all the instructions and cautionary markings on these products.
5. Become familiar with the controls and proper use of the machine, battery pack, and battery charger.

II. Preparation

1. Keep bystanders, especially children and pets, out of the operating area.
2. Do not operate the machine without all guards and safety devices, such as deflectors and grass catchers, in place and functioning properly on the machine.
3. Inspect the area where you will use the machine and remove all objects that could interfere with the operation of the machine or that the machine could throw.
4. Before using the machine, ensure that the blade, blade bolt, and blade assembly are not worn or damaged. Replace any damaged or unreadable labels.
5. Use only the battery pack specified by Toro. Using other accessories and attachments may increase the risk of injury and fire.
6. Plugging the battery charger into an outlet that is not 120V can cause a fire or electric shock. Do not plug the battery charger into an outlet other than 120V. For a different style of connection, use an attachment plug adapter of the proper configuration for the power outlet if needed.
7. Do not use a damaged or modified battery pack or battery charger, which may exhibit unpredictable behavior that results in fire, explosion, or risk of injury.
8. If the supply cord to the battery charger is damaged, contact an Authorized Service Dealer to replace it.
9. Charge the battery pack with only the battery charger specified by Toro. A charger suitable for 1 type of battery pack may create a risk of fire when used with another battery pack.
10. Charge the battery pack in a well-ventilated area only.
11. Follow all charging instructions and do not charge the battery pack outside of the temperature range specified in the instructions. Otherwise, you may damage the battery pack and increase the risk of fire.
12. Dress properly—Wear appropriate clothing, including eye protection; long pants; substantial, slip-resistant footwear (not barefoot or wearing sandals); and hearing protection. Tie back long hair and do not wear loose clothing or loose jewelry that can get caught in moving parts. Wear a dust mask in dusty operating conditions. Use of rubber gloves is recommended.

III. Operation

1. Contact with the moving blade will cause serious injury. Keep your hands and feet away from the cutting area and all moving parts of the machine. Keep clear of any discharge opening.
2. Using this machine for purposes other than its intended use could prove dangerous to you and bystanders.
3. Disengage the self-propel drive (if equipped) before starting the machine.
4. Do not tilt the machine when starting the motor.
5. Prevent unintentional starting—Ensure that the electric-start button is removed from the electric-start switch before connecting the battery pack and handling the machine.
6. Use your full attention while operating the machine. Do not engage in any activity that causes distractions; otherwise, injury or property damage may occur.
7. Stop the machine, remove the electric-start button, remove the battery pack from the machine, and wait for all movement to stop before adjusting, servicing, cleaning, or storing the machine.

8. Remove the battery pack and electric-start button from the machine whenever you leave it unattended or before changing accessories.
9. Do not force the machine—Allow the machine to do the job better and safer at the rate for which it was designed.
10. Stay alert—Watch what you are doing and use common sense when operating the machine. Do not use the machine while ill, tired, or under the influence of alcohol or drugs.
11. Do not use a battery-operated lawn mower in rain.
12. Operate the machine only in good visibility and appropriate weather conditions. Do not operate the machine when there is the risk of lightning.
13. Use extreme caution when reversing or pulling the machine toward you.
14. Keep proper footing and balance at all times, especially on slopes. Mow across the face of slopes, never up and down. Use extreme caution when changing directions on slopes. Do not mow exceedingly steep slopes. Walk, never run with the machine.
15. Do not direct the discharge material toward anyone. Avoid discharging material against a wall or obstruction; material may ricochet toward you. Stop the blade(s) when crossing surfaces other than grass.
16. Watch for holes, ruts, bumps, rocks, or other hidden objects. Uneven terrain could cause you to lose your balance or footing.
17. Wet grass or leaves can cause serious injury if you slip and contact the blade. Do not mow in wet conditions. Do not mow when it is raining.
18. If the machine strikes an object or starts to vibrate, immediately shut off the machine, remove the electric-start button, remove the battery pack, and wait for all movement to stop before examining the machine for damage. Make all necessary repairs before resuming operation.
19. Stop the machine and remove the electric-start button before loading the machine for hauling.
20. Under abusive conditions, the battery pack may eject liquid; avoid contact. If you accidently come into contact with the liquid, flush with water. If the liquid contacts your eyes, seek medical help. Liquid ejected from the battery pack may cause irritation or burns.

IV. Maintenance and Storage

1. Stop the machine, remove the electric-start button, remove the battery pack from the machine, and wait for all movement to stop before adjusting, servicing, cleaning, or storing the machine.
2. Do not attempt to repair the machine except as indicated in the instructions. Have an Authorized Service Dealer perform service on the machine using identical replacement parts.
3. Wear gloves and eye protection when servicing the machine.
4. Sharpen a dull blade on both edges to maintain balance. Clean the blade and ensure that it is balanced.
5. Replace the blade if it is bent, worn, or cracked. An unbalanced blade causes vibration, which could damage the motor or cause personal injury.
6. When servicing the blade, be aware that the blade can still move even though the power source is off.
7. Check the grass collection bag frequently for deterioration or wear, and replace a worn bag with a Toro [replacement] bag.
8. For best performance, use only genuine Toro replacement parts and accessories. Other replacement parts and accessories could be dangerous, and such use could void the product warranty.
9. Maintain the machine—Keep cutting edges sharp and clean for the best and safest performance. Keep handles dry, clean, and free from oil and grease. Keep guards in place and in working order. Keep blades sharp. Use identical replacement blades only.
10. Check the machine for damaged parts—If there are damaged guards or other parts, determine whether the machine will operate properly. Check for misaligned and binding moving parts, broken parts, mounting, and any other condition that may affect its operation. Unless indicated in the instructions, have an Authorized Service Dealer repair or replace a damaged guard or part.
11. When the battery pack is not in use, keep it away from metal objects such as paper clips, coins, keys, nails, and screws that can make a connection from 1 terminal to another. Shorting the battery terminals may cause burns or a fire.
12. Check the blade and motor mounting bolts frequently for tightness.

13. When you are not using the machine, store it indoors in a dry, secure place out of the reach of children.
14. Do not expose a battery pack or machine to fire or excessive temperature. Exposure to fire or temperature above 130°C (265°F) may cause explosion.
15. CAUTION—A mistreated battery pack may present a risk of fire, explosion, or chemical burn.
    - Do not disassemble the battery pack.
    - Replace the battery pack with a genuine Toro battery pack only; using another type of battery pack may cause a fire or risk of injury.
    - Keep battery packs out of the reach of children and in the original packaging until you are ready to use them.

SAVE THESE INSTRUCTIONS

Safety and Instructional Decals

Safety decals and instructions are easily visible to the operator and are located near any area of potential danger. Replace any decal that is damaged or missing.



decal137-9462

137-9462



decal137-9463

137-9463

1. The battery pack is charging.
2. The battery pack is fully charged.
3. The battery pack is over or under the appropriate temperature range.
4. Battery pack charging fault



decal137-9455

137-9455

1. Read the *Operator's Manual*.
2. Keep away from open fire or flames.
3. Do not expose to rain.

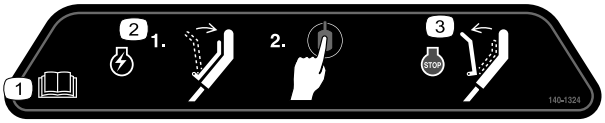

decal140-1324

140-1324

1. Read the *Operator's Manual*.
2. To start the machine, squeeze the bar to the handle and press the button.
3. To shut off the machine, release the bar.

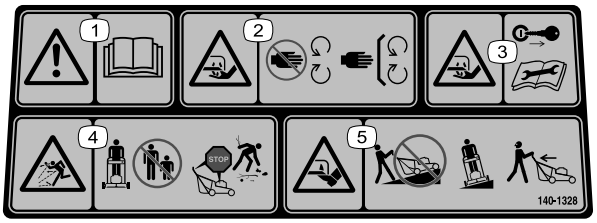

decal140-1328

140-1328

1. Warning—read the *Operator's Manual*.
2. Cutting/dismemberment hazard of the hand, mower blade—stay away from moving parts; keep all guards and shields in place.
3. Cutting/dismemberment hazard of the hand, mower blade—remove the key and read the *Operator's Manual* before performing maintenance.
4. Thrown object hazard—keep bystanders away; shut off the engine and wait for all moving parts to stop before leaving the machine; pick up debris before mowing.
5. Cutting/dismemberment hazard of the foot, mower blade—do not mow up or down slopes; only mow across slopes; look behind you when mowing in reverse.



decal94-8072

94-8072



decal125-5026

125-5026

1. Recycling mode
2. Bagging mode

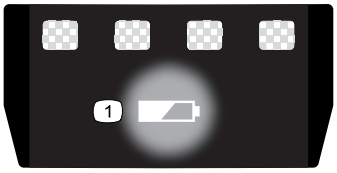

decal137-9461

137-9461

1. Battery charge status

⚠ WARNING: Cancer and Reproductive Harm - www.P65Warnings.ca.gov.
For more information, please visit www.ttcoCAProp65.com
133-8061

decal133-8061

133-8061

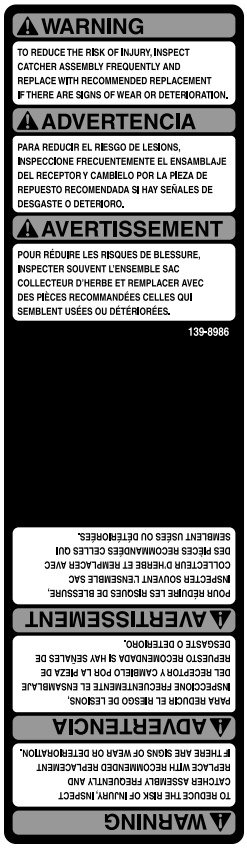

decal139-8986

139-8986

Setup

Important: **The battery pack is not fully charged when it is purchased. Before using the machine for the first time, refer to Charging the Battery Pack (page 17).**

1

Mounting the Battery Charger (Optional)

No Parts Required

Procedure

If desired, mount the battery charger securely on a wall using the wall-mount key holes on the back of the charger.

Mount it indoors (such as a garage or other dry place), near a power outlet, and out of the reach of children.

Refer to Figure 3 for assistance in mounting the charger.

Slide the charger over the appropriately positioned hardware to secure the charger in place (hardware not included).

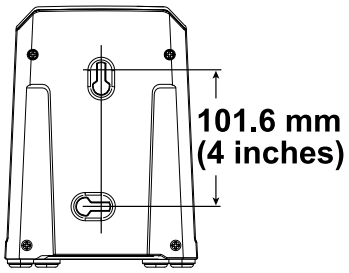

g290534

Figure 3

2

Unfolding the Handle

No Parts Required

Procedure

⚠ WARNING

Folding or unfolding the handle improperly can damage the cables, causing an unsafe operating condition.

- **Do not damage the cable(s) when folding or unfolding the handle.**
- **Ensure that the cable(s) are routed to the outside of the handle.**
- **If a cable is damaged, contact an Authorized Service Dealer.**

Note: Ensure that the cables are routed on the outside of the handle and are not pinched (D of Figure 4).

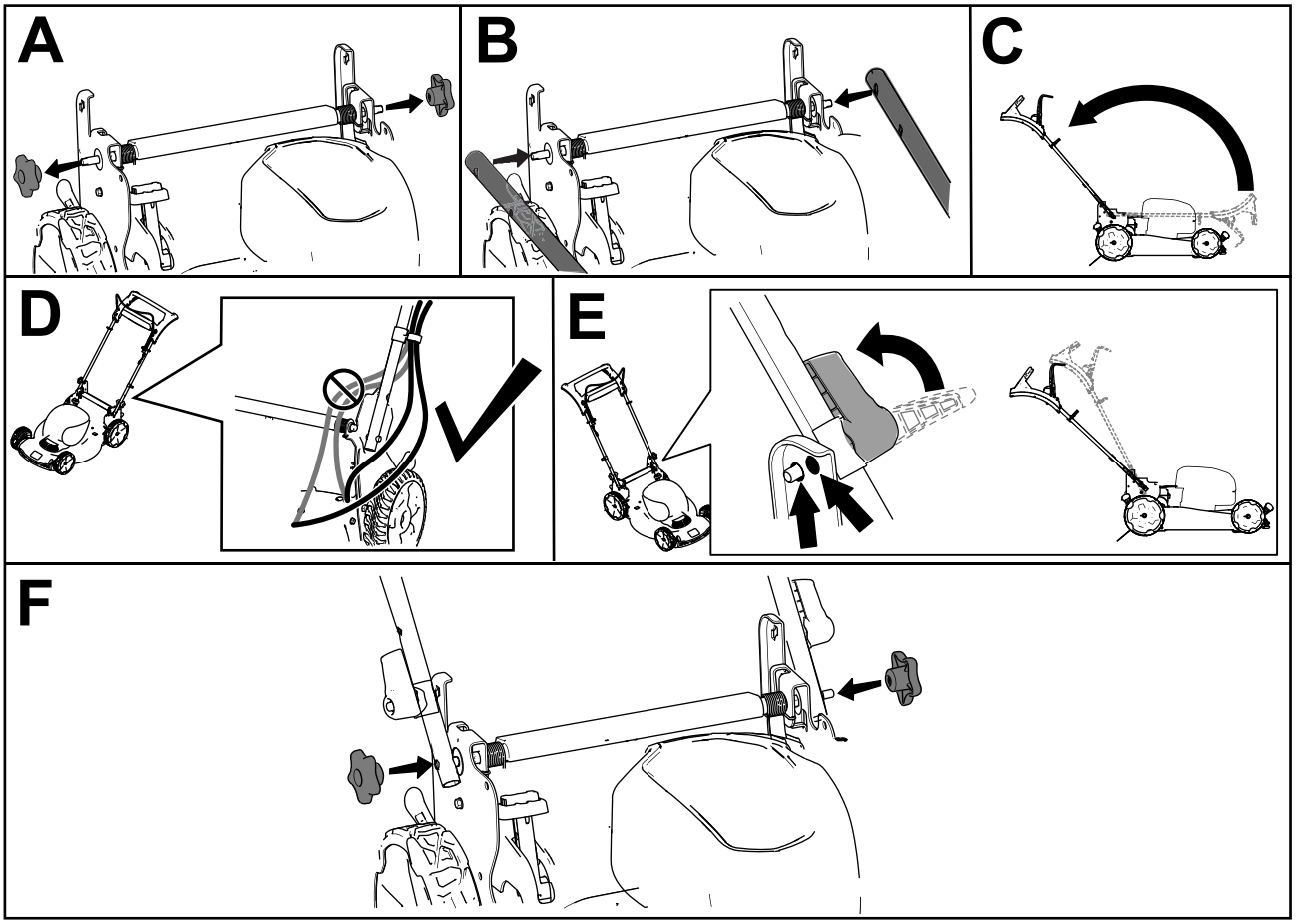

g335466

Figure 4

3

Assembling the Grass Bag

No Parts Required

Procedure

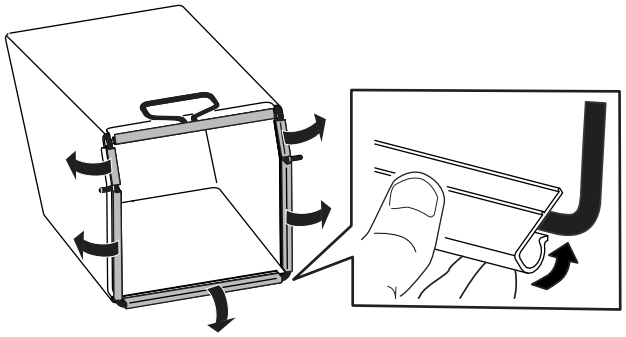

g334351

Figure 5

Product Overview

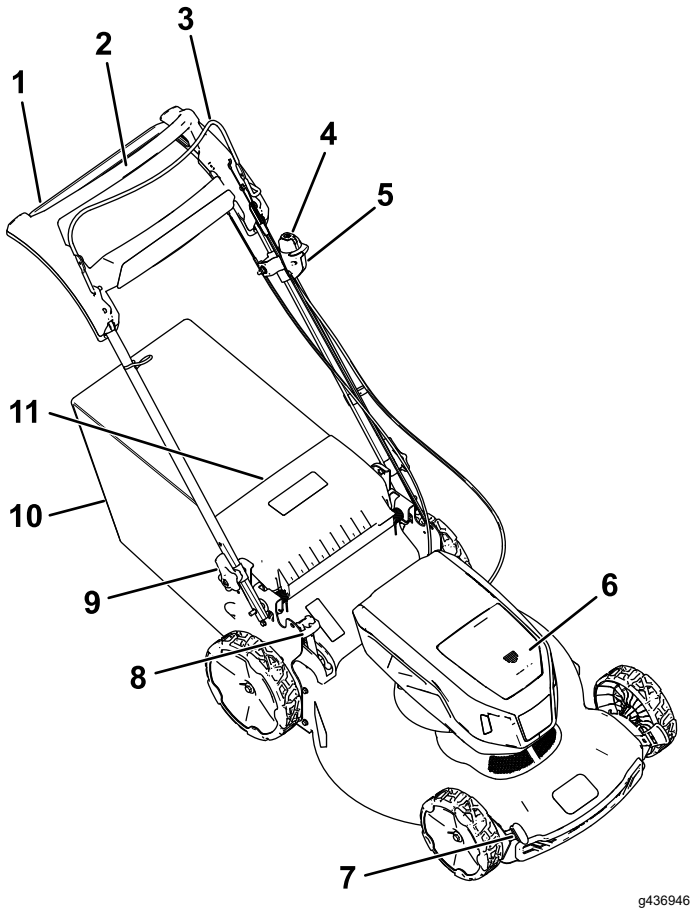

Figure 6

1. Handle
2. Self-propel drive bar
3. Blade-control bar
4. Electric-start button
5. Electric-start switch
6. Battery compartment
7. Cutting-height lever (4)
8. Bag-on-demand lever
9. Handle lever (2)
10. Grass bag
11. Rear deflector

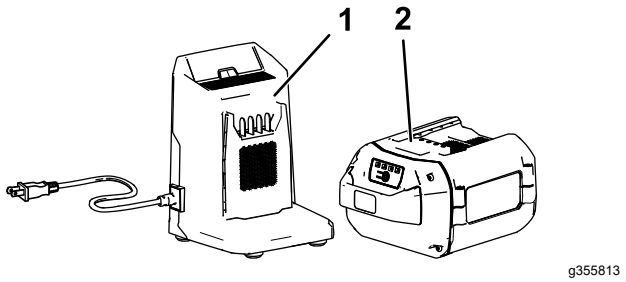

Figure 7

1. Battery charger (included with Model 21467)
2. Battery pack model 88660 (included with Model 21467)

Specifications

Battery Pack

Model	**88660**
Battery pack capacity	6.0 Ah 324 Wh
Battery manufacturer rating = 60V maximum and 54V nominal. Actual voltage varies with load.	

Battery Charger

Model	**88602**
Type	60V MAX Lithium-Ion Battery Charger
Input	120V AC ~2.0A, 60Hz
Output	60V DC ⎓ 2.0A MAX

Appropriate Temperature Ranges

Charge/store the battery pack at	5°C (41°F) to 40°C (104°F)*
Use the battery pack at	-30°C (-22°F) to 49°C (120°F)*
Use the machine at	0°C (32°F) to 49°C (120°F)*

*Charging time will increase if you do not charge the battery pack within this range.

Store the machine, battery pack, and battery charger in an enclosed clean, dry area.

Attachments/Accessories

A selection of Toro approved attachments and accessories is available for use with the machine to enhance and expand its capabilities. Contact your Authorized Service Dealer or authorized Toro distributor or go to www.Toro.com for a list of all approved attachments and accessories.

To ensure optimum performance and continued safety certification of the machine, use only genuine Toro replacement parts and accessories. Replacement parts and accessories made by other manufacturers could be dangerous.

Operation

Before Operation

Installing the Battery Pack

Important: **Use the battery pack only in temperatures that are within the appropriate range; refer to Specifications (page 11).**

1. Ensure that the vents on the battery are clear of any dust and debris.
2. Press down on the battery-compartment lid to open it (A of Figure 8).
3. Line up the cavity in the battery pack with the tongue on the machine and slide the battery pack into the compartment until it locks into place (B of Figure 8).
4. Press down on the battery-compartment lid until it clicks into place (C of Figure 8).

   Note: If the battery-compartment lid does not close completely, the battery is not fully installed.

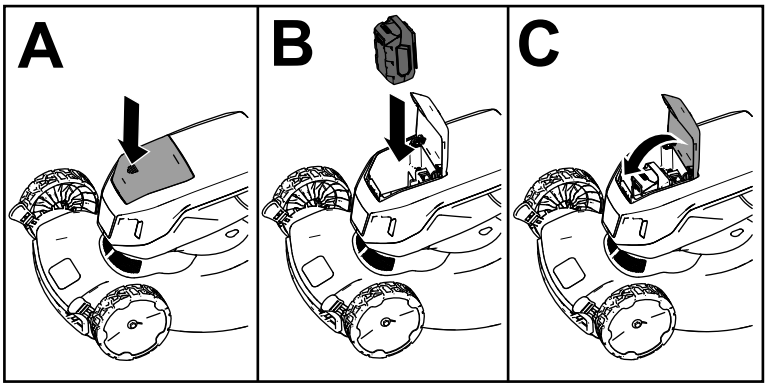

g436947

Figure 8

Adjusting the Cutting Height

⚠ DANGER

Adjusting the height-of-cut could bring your hands into contact with a moving blade and result in serious injury.

- **Shut off the motor, remove the battery, and wait for all moving parts to stop before adjusting the cutting height.**
- **Do not put your fingers under the housing when adjusting the cutting height.**

Adjust the cutting height as desired. Set all wheels to the same cutting height (Figure 9).

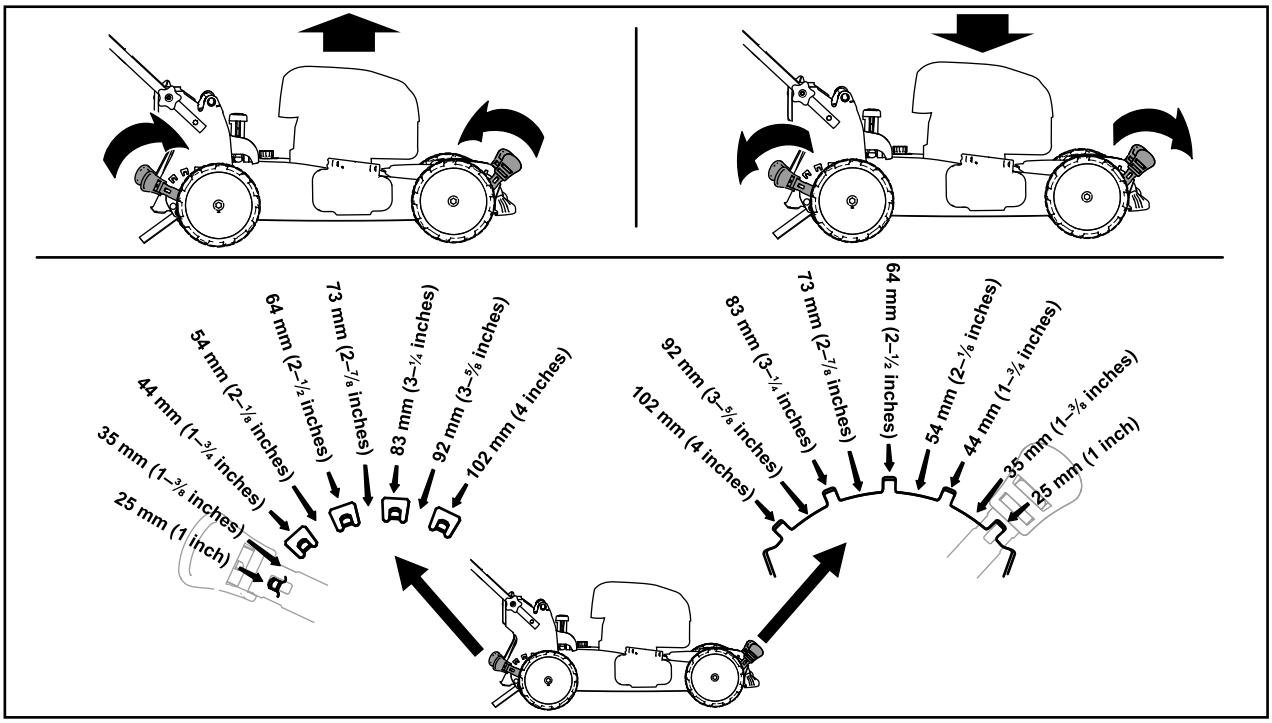

g254131

Figure 9

During Operation

Starting the Machine

1. Ensure that the battery pack is installed in the machine; refer to Installing the Battery Pack (page 12).

   Note: If the battery-compartment lid does not close completely, the battery is not fully installed.
2. Insert the electric-start button into the electric-start switch (A of Figure 10).
3. Squeeze the blade-control bar and hold it to the handle (B of Figure 10).
4. Press the electric-start button and keep it pressed until the motor starts (C of Figure 10).

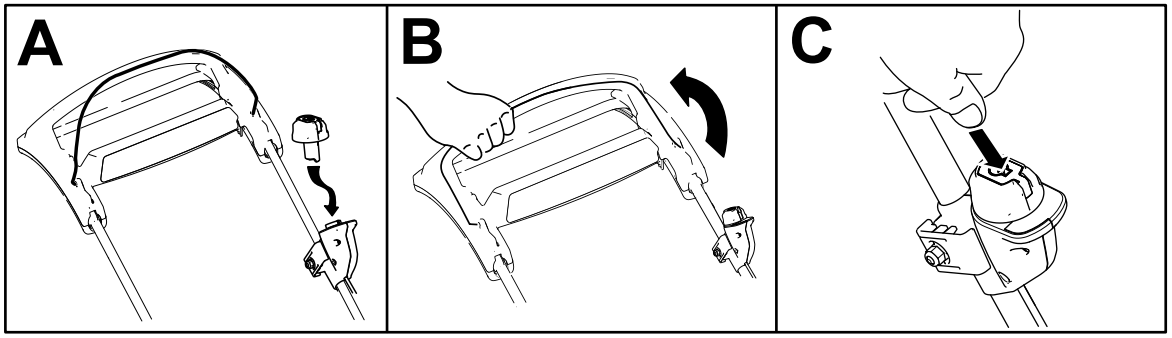

g370586

Figure 10

Using the Self-Propel Drive

Simply walk with your hands on the upper handle and your elbows at your sides, and the machine will automatically keep pace with you (Figure 11).

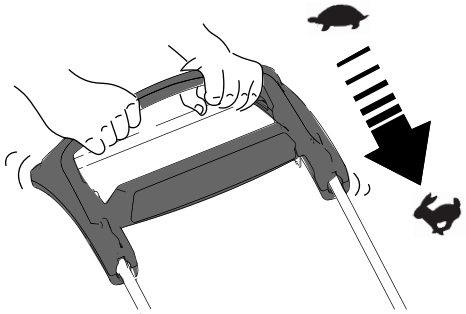

g334136

Figure 11

Note: If the machine does not freely roll backward after self-propelling, stop walking, hold your hands in place, and allow the machine to roll a couple of centimeters (inches) forward to disengage the wheel drive. You can also try reaching just under the upper handle to the metal handle and pushing the machine forward a couple of centimeters (inches). If the machine still does not roll backward easily, contact an Authorized Service Dealer.

Recycling the Clippings

Your machine comes from the factory ready to recycle the grass and leaf clippings back into the lawn.

If the grass bag is on the machine and the bag-on-demand lever is in the bagging position, move the lever to the recycling position; refer to Operating the Bag-on-Demand Lever (page 15).

Bagging the Clippings

Use the grass bag when you want to collect grass and leaf clippings from the lawn.

If the bag-on-demand lever is in the recycling position, move it to the bagging position; refer to Operating the Bag-on-Demand Lever (page 15).

Installing the Grass Bag

1. Raise and hold up the rear deflector (A of Figure 12).
2. Install the grass bag, ensuring that the pins on the bag rest in the notches on the handle (B of Figure 12).
3. Lower the rear deflector.

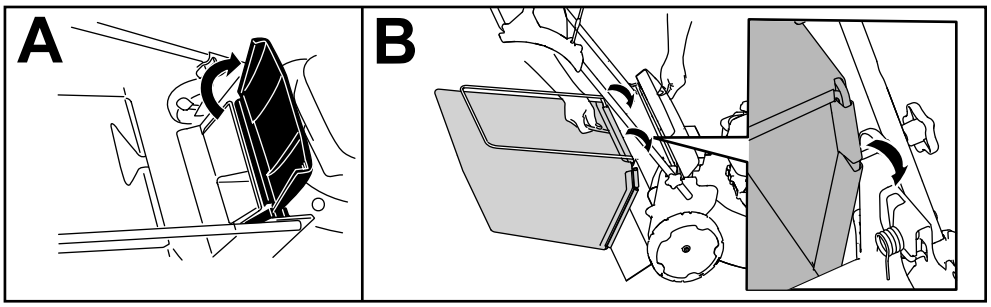

g334207

Figure 12

Removing the Grass Bag

To remove the bag, reverse the steps in Installing the Grass Bag (page 15).

Operating the Bag-on-Demand Lever

The bag-on-demand feature allows you to either collect or recycle grass and leaf clippings while the grass bag is attached to the machine.

- **To bag the grass and leaf clippings**, press the button on the bag-on-demand lever and move the lever forward until the button on the lever pops up (Figure 13).

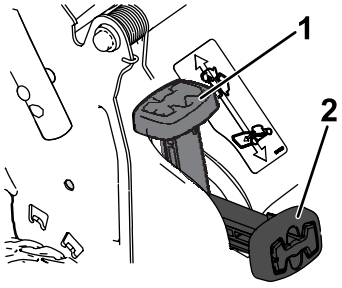

g251583

Figure 13

1. Bag-on-demand lever (in the recycling position)
2. Bag-on-demand lever (in the bagging position)

- **To recycle the grass and leaf clippings**, press the button on the lever and move the lever rearward until the button on the lever pops up.

  Important: **For proper operation, remove any grass clippings and debris from the bag-on-demand door and the surrounding opening (Figure 14) before you move the bag-on-demand lever from 1 position to another.**

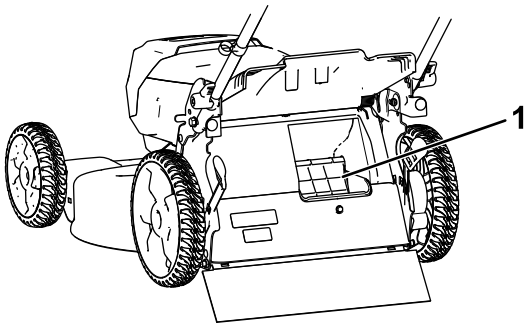

g251584

Figure 14

1. Clean here

Shutting Off the Machine

1. Release the blade-control bar (A of Figure 15).
2. Remove the electric-start button from the electric-starter switch (B of Figure 15).
3. Remove the battery pack; refer to Removing the Battery Pack from the Machine (page 16).

   Note: Whenever you are not using the machine, remove the battery pack.

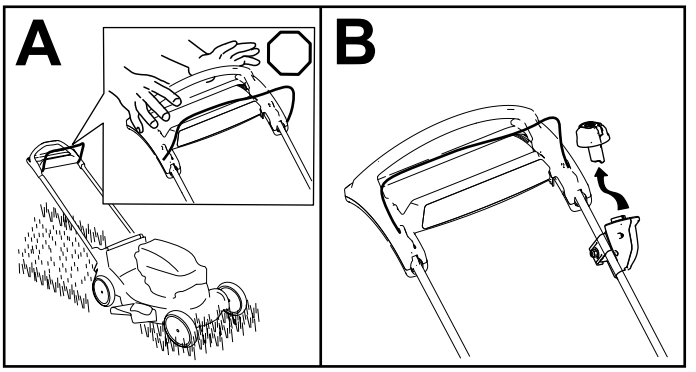

g335480

Figure 15

Removing the Battery Pack from the Machine

1. Lift up the battery-compartment lid.
2. Press the battery-pack latch to release the battery pack and remove the battery pack.
3. Close the battery-compartment lid.

Operating Tips

General Mowing Tips

- Avoid striking solid objects with the blade. Never deliberately mow over any object.
- For best performance, install a new Toro blade before the cutting season begins or when necessary.

Cutting Grass

- Cut only about a third of the grass blade at a time. For improved runtime, cut grass at a higher height of cut.
- Do not cut below 51 mm (2 inches) unless the grass is sparse or it is late fall when grass growth begins to slow down.
- When cutting grass over 15 cm (6 inches) tall, mow at the highest cutting height setting and walk slower; then mow again at a lower setting for the best lawn appearance. If the grass is too long, the machine may plug and cause the motor to stall.
- Wet grass and leaves tend to clump on the yard and can cause the machine to plug or the motor to stall. Avoid mowing in wet conditions.
- Be aware of a potential fire hazard in very dry conditions, follow all local fire warnings, and keep the machine free of dry grass and leaf debris.
- Alternate the mowing direction. This helps disperse the clippings over the lawn for even fertilization.
- If the finished lawn appearance is unsatisfactory, try 1 or more of the following:
  - Replace the blade or have it sharpened.
  - Walk at a slower pace while mowing.
  - Raise the cutting height on your machine.
  - Cut the grass more frequently.
  - Overlap cutting swaths instead of cutting a full swath with each pass.

Cutting Leaves

- After cutting the lawn, ensure that half of the lawn shows through the cut leaf cover. You may need to make more than a single pass over the leaves.
- If there are more than 13 cm (5 inches) of leaves on the lawn, mow at a higher cutting height and then again at the desired cutting height.
- Slow down your mowing speed if the machine does not cut the leaves finely enough.

After Operation

Charging the Battery Pack

Important: **The battery pack is not fully charged when you purchase it. Before using the tool for the first time, place the battery pack in the charger and charge it until the LED display indicates the battery pack is fully charged. Read all safety precautions.**

Important: **Charge the battery pack only in temperatures that are within the appropriate range; refer to Specifications (page 11).**

Note: At any time, press the battery-charge-indicator button on the battery pack to display the current charge (LED indicators).

1. Ensure that the vents on the battery and charger are clear of any dust and debris.

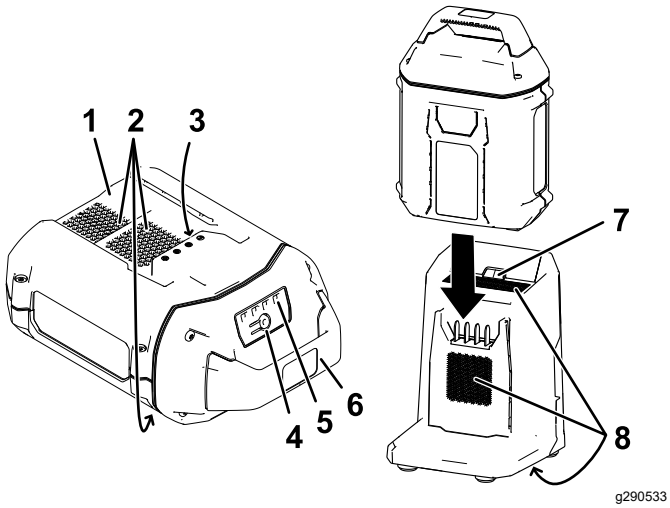

Figure 16

1. Battery pack cavity
2. Battery pack venting areas
3. Battery pack terminals
4. Battery-charge-indicator button
5. LED indicators (current charge)
6. Handle
7. Charger LED indicator light
8. Charger venting areas

2. Line up the cavity in the battery pack (Figure 16) with the tongue on the charger.
3. Slide the battery pack into the charger until it is fully seated (Figure 16).
4. To remove the battery pack, slide the battery backward out of the charger.
5. Refer to the following table to interpret the LED indicator light on the battery charger.

Indicator light	Indicates
Off	No battery pack inserted
Green blinking	Battery pack is charging
Green	Battery pack is charged
Red	Battery pack and/or battery charger is over or under the appropriate temperature range
Red blinking	Battery pack charging fault*

*Refer to Troubleshooting (page 23) for more information.

Important: **The battery can be left on the charger for short periods between uses.**

If the battery will not be used for longer periods, remove the battery from the charger; refer to Storage (page 22).

Cleaning Under the Machine

Service Interval: After each use

For best results, clean the machine soon after you have completed mowing.

1. Move the machine onto a flat paved surface.
2. Remove the electric-start button and wait for all moving parts to stop before leaving the operating position.
3. Remove the battery pack; refer to Removing the Battery Pack from the Machine (page 16).
4. Wash out the area under the rear door where the clippings go from the underside of the machine to the grass bag.

   Note: Wash out the area with the bag-on-demand (if equipped) in both the fully forward and fully rearward positions.
5. Start the motor and run it for a few minutes to dry the underside of the machine to prevent it from rusting.
6. Shut off the motor, remove the electric-start button, and store the machine; refer to Storage (page 22).

Cleaning Under the Machine in the Vertical-Stow Position

1. Set the machine in the vertical-stow position; refer to Storing the Machine in the Vertical-Stow Position (page 19).
2. Wash out the clippings from under the machine.

Folding the Handle

⚠ WARNING

Folding or unfolding the handle improperly can damage the cables, causing an unsafe operating condition.

- **Do not damage the cable(s) when folding or unfolding the handle.**
- **Ensure that the cable(s) are routed to the outside of the handle.**
- **If a cable is damaged, contact an Authorized Service Dealer.**

1. Hold the handle while disengaging the handle locks to avoid pinching your hands.
2. Disengage the handle locks until you can move the upper handle freely (A of Figure 17)
3. Fold the handle forward to the fully forward position (B of Figure 17).

   Important: **Route the cables to the outside of the handle locks as you fold the handle.**

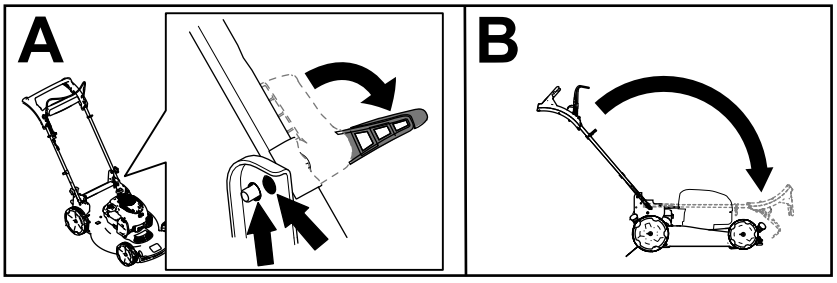

g334367

Figure 17

4. To unfold the handle, refer to 2 Unfolding the Handle (page 9).

Storing the Machine in the Vertical-Stow Position

You can store your machine in the vertical position to minimize storage space.

⚠ DANGER

The vertical-stow position exposes the bottom of the machine.

- **Remove the battery pack and the electric-start button before moving the machine into the vertical-stow position.**
- **Do not transport the machine in the vertical-stow position.**
- **Do not attempt to start the machine in the vertical-stow position.**

1. Remove the electric-start button and battery from the machine.
2. Ensure that the cutting-height setting on the machine is 92 mm (3-5/8 inches) or lower; if it is not, lower it; refer to Adjusting the Cutting Height (page 13).
3. Disengage the handle locks (Figure 18).

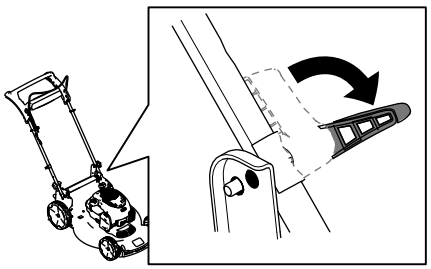

g335482

Figure 18

4. Fold the handle fully forward; refer to Folding the Handle (page 18).

   Important: **Route the cables to the outside of the handle knobs as you fold the handle.**
5. Engage the handle locks.
6. Lift the front of the machine by the handle and move it into a storage space (Figure 19).

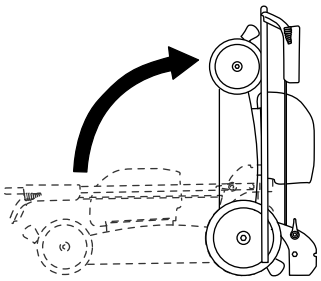

g251586

Figure 19

Maintenance

Remove the electric-start button and battery pack from the machine before maintaining or cleaning the machine.

Use only the manufacturer's recommended replacement parts and accessories.

Inspect and maintain the machine regularly. Have the machine repaired only by an Authorized Service Dealer.

Lubricating the Machine

You do not need to lubricate the machine; all the bearings have been lubricated at the factory for the life of the machine.

Replacing the Blade

Service Interval: Yearly

***Important:* You will need a torque wrench to install the blade properly. If you do not have a torque wrench or are uncomfortable performing this procedure, contact an Authorized Service Dealer.**

If the blade is damaged or cracked, replace it immediately. If the blade edge is dull or nicked, have it sharpened and balanced, or replace it.

⚠ WARNING

When servicing the blade, the blade can still move even though the power source is off. The blade is sharp; contacting the blade can result in serious personal injury.

- **Keep your hands and feet away from a moving blade.**
- **Wear gloves when servicing the blade.**

1. Remove the electric-start button and battery pack from the machine.
2. Use a block of wood to hold the blade steady (Figure 20).
3. Remove the blade, saving all mounting hardware (Figure 20).

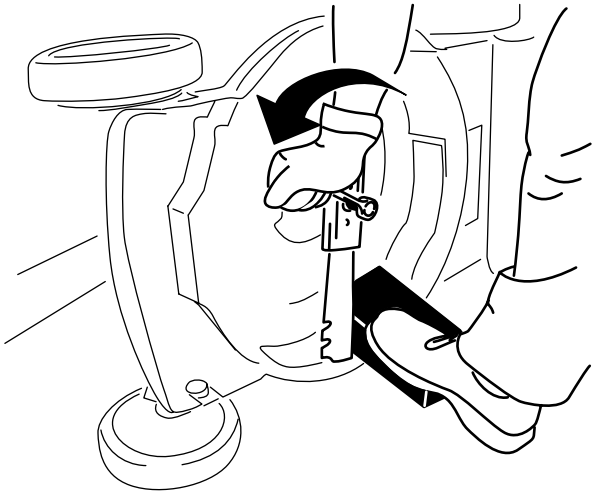

g231389

Figure 20

4. Install the new blade and all mounting hardware (Figure 21).

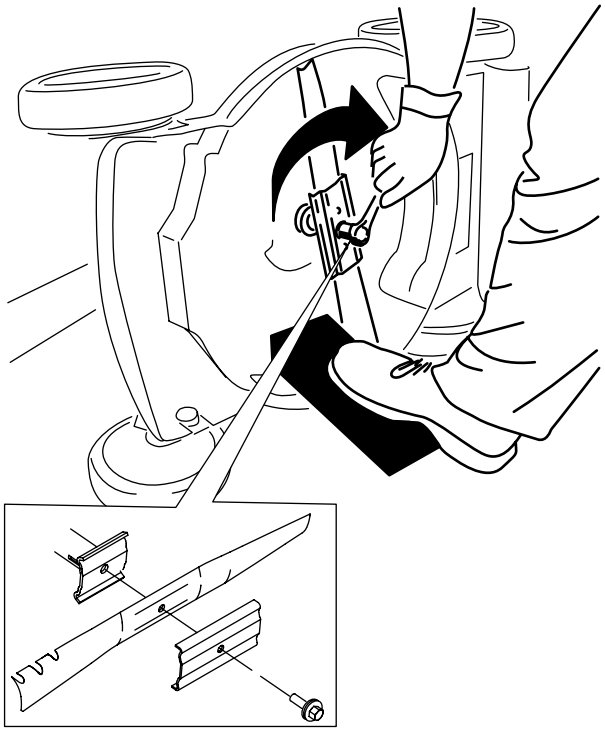

g231390

Figure 21

***Important:* Position the curved ends of the blade facing up toward the machine housing.**

5. **Use a torque wrench to tighten the blade bolt to 68 N·m (50 ft-lb).**

Adjusting the Self-Propel Drive

For Self-Propel-Drive Models Only

Whenever you install a new self-propel cable or if the self-propel drive is out of adjustment, adjust the self-propel drive.

1. Turn the adjustment nut counterclockwise to loosen the cable adjustment (Figure 22).

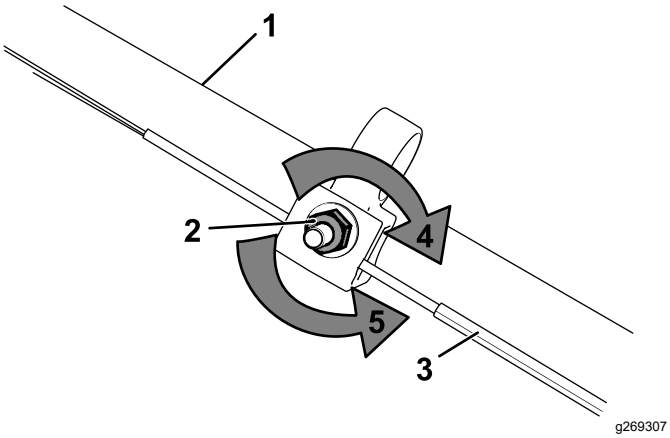

Figure 22

1. Handle (left side)
2. Adjustment nut
3. Self-propel-drive cable
4. Turn the nut clockwise to tighten the adjustment.
5. Turn the nut counterclockwise to loosen the adjustment.

2. Adjust the tension on the cable (Figure 22) by pulling it back or pushing it forward and holding that position.

   Note: Push the cable toward the motor to increase the traction; pull the cable away from the motor to decrease the traction.

3. Turn the adjustment nut clockwise to tighten the cable adjustment.

   Note: Tighten the nut firmly with a socket or wrench.

Preparing the Battery Pack for Recycling

Important: **Upon removal, cover the terminals of the battery pack with heavy-duty adhesive tape. Do not attempt to destroy or disassemble the battery pack or remove any of its components.**

	Lithium-ion battery packs labeled with the Call2Recycle seal can be recycled at any participating retailer or battery recycling facility in the Call2Recycle program (US and Canada only). To locate a participating retailer or facility closest to you, please call 1-800-822-8837 or visit www.call2recycle.org. If you cannot locate a participating retailer or facility nearby, or if your rechargeable battery is not labeled with the Call2Recycle seal, please contact your local municipality for more information on how to responsibly recycle the battery. If you are located outside of the US and Canada, please contact your authorized Toro distributor.

Storage

Important: **Store the machine, battery pack, and charger only in temperatures that are within the appropriate range; refer to Specifications (page 11).**

Important: **If you are storing the battery pack for the off-season, charge it until 2 or 3 LED indicators turn green on the battery. Do not store a fully charged or fully depleted battery. When you are ready to use the machine again, charge the battery pack until the left indicator light turns green on the charger or all 4 LED indicators turn green on the battery.**

- Disconnect the product from the power supply (i.e., remove the battery pack) and check for damage after use.
- Do not store the machine with the battery pack installed.
- Clean all foreign material from the product.
- When not in use, store the machine, electric-start button, battery pack, and battery charger out of the reach of children.
- Keep the machine, battery pack, and battery charger away from corrosive agents, such as garden chemicals and de-icing salts.
- To reduce the risk of serious personal injury, do not store the battery pack outside or in vehicles.
- Store the machine, battery pack, and battery charger in an enclosed clean, dry area.

Troubleshooting

Perform only the steps described in these instructions. All further inspection, maintenance, and repair work must be performed by an authorized service center or a similarly qualified specialist if you cannot solve the problem yourself.

Always remove the battery from the machine when troubleshooting, inspecting, maintaining, or cleaning the tool.

Problem	Possible Cause	Corrective Action
The machine does not start.	1. The battery is not fully installed in the machine. 2. The battery pack is not charged. 3. The battery pack is damaged. 4. There is another electrical problem with the machine.	1. Remove and then replace the battery into the machine, making sure that it is fully installed and latched. 2. Remove the battery pack from the machine and charge it. 3. Replace the battery pack. 4. Contact an Authorized Service Dealer.
The machine does not run continuously.	1. There is moisture on the leads of the battery pack. 2. The battery is not fully installed into the tool.	1. Allow the battery pack to dry or wipe it dry. 2. Remove and then replace the battery into the tool making sure that it is fully installed and latched.
The machine does not reach full power.	1. The battery pack charge capacity is too low. 2. The air vents are blocked.	1. Remove the battery pack from the machine and fully charge the battery pack. 2. Clean the air vents.
The battery pack loses charge quickly.	1. The battery pack is over or under the appropriate temperature range.	1. Move the battery pack to a place where it is dry and the temperature is between 5°C (41°F) and 40°C (104°F).
The battery charger is not working.	1. The battery charger is over or under the appropriate temperature range. 2. The outlet that the battery charger is plugged into does not have power.	1. Unplug the battery charger and move it to a place where it is dry and the temperature is between 5°C (41°F) and 40°C (104°F). 2. Contact your licensed electrician to repair the outlet.
The LED indicator light on the battery charger is red.	1. The battery charger and/or battery pack is over or under the appropriate temperature range.	1. Unplug the battery charger and move the battery charger and battery pack to a place where it is dry and the temperature is between 5°C (41°F) and 40°C (104°F).
The LED indicator light on the battery charger is blinking red.	1. There is an error in the communication between the battery pack and the charger. 2. The battery pack is weak.	1. Remove the battery pack from the battery charger, unplug the battery charger from the outlet, and wait 10 seconds. Plug the battery charger into the outlet again and place the battery pack on the battery charger. If the LED indicator light on the battery charger is still blinking red, repeat this procedure again. If the LED indicator light on the battery charger is still blinking red after 2 attempts, properly dispose of the battery pack at a battery recycling facility. 2. Properly dispose of the battery pack at a battery recycling facility.

Problem	Possible Cause	Corrective Action
The machine is producing a beeping sound.	1. The battery pack is not charged. 2. The machine is in an unsafe position for operation. 3. The machine is overloaded. 4. There is another electrical problem with the machine.	1. Remove the battery pack from the machine and charge it. 2. Ensure that the machine is not at an extreme angle while operating. 3. Cut the grass at a higher height of cut or walk at a slower pace while mowing. 4. Attempt the other troubleshooting actions, if the alarm still sounds, contact an Authorized Service Dealer.
The quality of cut is decreased or unsatisfactory.	1. The blade is dull. 2. The cutting deck has debris buildup.	1. Have the blade sharpened or replaced. 2. Clean under the machine.
The machine is cutting unevenly.	1. The blade is dull. 2. The cutting deck is damaged.	1. Have the blade sharpened or replaced. 2. Contact an Authorized Service Dealer.
The machine is vibrating.	1. The blade is bent or damaged.	1. Inspect the blade and replace if necessary.

Notes:

Notes:

California Proposition 65 Warning Information

What is this warning?

You may see a product for sale that has a warning label like the following:



WARNING: Cancer and Reproductive Harm—www.p65Warnings.ca.gov.

What is Prop 65?

Prop 65 applies to any company operating in California, selling products in California, or manufacturing products that may be sold in or brought into California. It mandates that the Governor of California maintain and publish a list of chemicals known to cause cancer, birth defects, and/or other reproductive harm. The list, which is updated annually, includes hundreds of chemicals found in many everyday items. The purpose of Prop 65 is to inform the public about exposure to these chemicals.

Prop 65 does not ban the sale of products containing these chemicals but instead requires warnings on any product, product packaging, or literature with the product. Moreover, a Prop 65 warning does not mean that a product is in violation of any product safety standards or requirements. In fact, the California government has clarified that a Prop 65 warning "is not the same as a regulatory decision that a product is 'safe' or 'unsafe.'" Many of these chemicals have been used in everyday products for years without documented harm. For more information, go to https://oag.ca.gov/prop65/faqs-view-all.

A Prop 65 warning means that a company has either (1) evaluated the exposure and has concluded that it exceeds the "no significant risk level"; or (2) has chosen to provide a warning based on its understanding about the presence of a listed chemical without attempting to evaluate the exposure.

Does this law apply everywhere?

Prop 65 warnings are required under California law only. These warnings are seen throughout California in a wide range of settings, including but not limited to restaurants, grocery stores, hotels, schools, and hospitals, and on a wide variety of products. Additionally, some online and mail order retailers provide Prop 65 warnings on their websites or in catalogs.

How do the California warnings compare to federal limits?

Prop 65 standards are often more stringent than federal and international standards. There are various substances that require a Prop 65 warning at levels that are far lower than federal action limits. For example, the Prop 65 standard for warnings for lead is 0.5 µg/day, which is well below the federal and international standards.

Why don't all similar products carry the warning?

- Products sold in California require Prop 65 labelling while similar products sold elsewhere do not.
- A company involved in a Prop 65 lawsuit reaching a settlement may be required to use Prop 65 warnings for its products, but other companies making similar products may have no such requirement.
- The enforcement of Prop 65 is inconsistent.
- Companies may elect not to provide warnings because they conclude that they are not required to do so under Prop 65; a lack of warnings for a product does not mean that the product is free of listed chemicals at similar levels.

Why does Toro include this warning?

Toro has chosen to provide consumers with as much information as possible so that they can make informed decisions about the products they buy and use. Toro provides warnings in certain cases based on its knowledge of the presence of one or more listed chemicals without evaluating the level of exposure, as not all the listed chemicals provide exposure limit requirements. While the exposure from Toro products may be negligible or well within the "no significant risk" range, out of an abundance of caution, Toro has elected to provide the Prop 65 warnings. Moreover, if Toro does not provide these warnings, it could be sued by the State of California or by private parties seeking to enforce Prop 65 and subject to substantial penalties.



Count on it.