FORM NO. 95-9309 Rev A

TORO®

MODEL NO. 41020-70224 and UP
MODEL NO. 41021-70224 and UP
MODEL NO. 41564-70224 and UP

OPERATOR'S & SET-UP MANUAL

MULTI PRO® 5500
TURF SPRAYER

To assure maximum safety, optimum performance, and to gain knowledge of the product, it is essential that you or any other operator of this vehicle read and understand the contents of this manual before the engine is ever started. Pay particular attention to the SAFETY INSTRUCTIONS highlighted by the triangular safety alert symbol.

The safety alert symbol means CAUTION, WARNING, or DANGER - personal safety instruction. Failure to comply with the instruction may result in personal injury.



©The TORO Company - 1998
All Rights Reserved

IDENTIFICATION AND ORDERING

VEHICLE:

The MULTI PRO® 5500 has two identification numbers: a model number and a serial number. These numbers are stamped into a plate located behind the left front fender of the vehicle. In any correspondence concerning the unit, supply the model number and serial numbers to ensure correct information and replacement parts are obtained. Record your Vehicle Identification numbers on the illustration below for future reference.



ENGINE:

An Identification Decal is affixed to the right side of the engine. The decal contains the engine serial number which identifies this unit from all others. The model number and S.O.. or special options determine the parts or components required on this unit. When ordering parts or in any communication involving the engine, it will be necessary to supply the engine manufacturer with these numbers, to ensure correct information and replacement parts are obtained. Record the engine identification numbers on the illustration below for future reference.

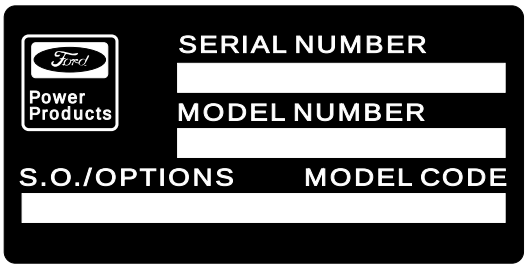

DATE PURCHASED: _____

This vehicle is not a motor vehicle as defined by the National Traffic Motor Vehicle Safety Act. **It is not designed or manufactured for use on roads, streets, or highways, and is not to be licensed as a motor vehicle.**

⚠ WARNING

The engine exhaust from this product contains chemicals known to the State of California to cause cancer, birth defects, or other reproductive harm.

FOREWORD

You have purchased a vehicle from the industry leader in maintenance excellence. Its future performance and dependability are of prime importance. TORO is also concerned about future use of the vehicle and of safety to the user. Therefore, this manual must be read by you and those involved with the MULTI PRO® 5500 to assure that safety, proper set-up, operation, and maintenance procedures are followed at all times. The major sections of the manual are:

1. SAFETY INSTRUCTIONS 2. SET-UP INSTRUCTIONS 3. BEFORE OPERATING

4. OPERATING INSTRUCTIONS 5. MAINTENANCE 6. SPRAY SYSTEM SECTION

Safety, mechanical, and some general information in this manual are emphasized. **DANGER, WARNING,** and **CAUTION** identify safety messages. Whenever the triangle safety symbol appears, it is followed by a safety message that must be read and understood. For more details concerning safety, read the safety instructions on pages 4 through 6. **IMPORTANT** identifies special mechanical information and **NOTE** identifies general information worthy of special attention.

OPTIONAL SPARK ARRESTER

In some places a Spark Arrester muffler must be used because of local, state, or federal regulations. The Spark Arrester available from your local TORO Distributor is approved by the United States Department of Agriculture and the United States Forest Service.

When the machine is used or operated on any California forest, brush, or grass covered land, a properly operating Spark Arrester must be obtained and installed to the Muffler. The operator is violating state law, Section 442 Public Resources Code if a Spark Arrester is not used.

All information, illustrations and specifications in this manual are based on the latest product information available at the time of publication. The right is reserved to make any changes at any time without notice.

TABLE OF CONTENTS

SAFETY INSTRUCTIONS 4-6
SPECIFICATIONS 7
SAFETY AND INSTRUCTION DECALS 8,9
SET-UP INSTRUCTIONS
- BATTERY SERVICE 10
- SPRAY SYSTEM 11-14
- FRESH WATER TANK 14

BEFORE OPERATING 15-19
VEHICLE CONTROLS 20,21
OPERATING INSTRUCTIONS 22-26
MAINTENANCE 26-44
- DAILY MAINTENANCE SCHEDULE 27
- MAINTENANCE SCHEDULE 28
- JACKING VEHICLE 29
- LUBRICATION 30
- AIR CLEANER MAINTENANCE 31
- ENGINE MAINTENANCE 32-33
- COOLING SYSTEM MAINTENANCE 34
- BELT MAINTENANCE 35
- HYDRAULIC SYSTEM MAINTENANCE 36
- HYDRAULIC SYSTEM DIAGRAM 37
- HYDRAULIC SYSTEM 38
- BRAKE MAINTENANCE 39
- THROTTLE LEVER TENSION 39
- AXLE MAINTENANCE 40
- ELECTRICAL MAINTENANCE 41
- VEHICLE ELECTRICAL DIAGRAM 42
- TRACTION DRIVE MAINTENANCE 43-44

SPRAY SYSTEM

SPRAYING SYSTEM 45
CONTROLS AND OPERATION 46
BEFORE SPRAYING
- NOZZLE SELECTION GPA/GAL/1000 FT^2 46,47
- NOZZLE SELECTION LIT/HA 48
- DEFINITIONS/CONVERSIONS 49
- FRESH WATER WASH TANK 50
- SYSTEM SET-UP 51
- FILLING SOLUTION TANK 51

OPERATION
- USING THE SPRAYER 51,52
- AFTER SPRAYING 52

PREVENTATIVE MAINTENANCE 52
PUMP MAINTENANCE 53
MAINTENANCE
- TROUBLESHOOTING SOLENOID VALVE 54
- SOLENOID VALVE MAINTENANCE 55,56

FLOW DIAGRAM 57
SPRAY SYSTEM ELECTRICAL DIAGRAM 58

STORAGE 59
PERFORMANCE VERIFICATION 60, 61
TORO PROMISE 64

⚠ SAFETY INSTRUCTIONS

The MULTI PRO® 5500 Turf Sprayer was designed and tested to offer safe service when operated and maintained properly. Although hazard control and accident prevention partially are dependent upon the design and configuration of the vehicle, these factors are also dependent upon the awareness, concern, and proper training of the personnel involved in the operation, maintenance, and storage of the vehicle. Improper use or maintenance of the vehicle can result in injury or death.

This is a specialized Turf Sprayer designed for off road use. Its ride and handling will have a different feel than what drivers experience with passenger cars or trucks. So take time to become familiar with your MULTI PRO® 5500. The attachments that adapt to the MULTI PRO® 5500 are not covered in this manual. See the specific Operator's Manual provided with the attachment for additional safety instructions. READ THESE MANUALS.

TO REDUCE THE POTENTIAL FOR INJURY OR DEATH, COMPLY WITH THE FOLLOWING SAFETY INSTRUCTIONS:

SUPERVISOR'S RESPONSIBILITIES

1. Make sure operators are thoroughly trained and familiar with the Operator's Manual and all labels on the vehicle.

2. Be sure to establish your own special procedures and work rules for unusual operating conditions (e.g. slopes too steep for vehicle operation).

BEFORE OPERATING

3. Operate the vehicle only after reading and understanding the contents of this manual. A replacement manual is available by sending complete model and serial number to: **Hahn Equipment Co.**, A subsidiary of The Toro Company, 1625 N. Garvin, Evansville, Indiana 47711-4596.

Read and understand the Engine Manufacturer's Operator's Manual. Follow the safety alert messages.

4. Never allow children to operate the vehicle or adults to operate it without proper instructions. Only trained and authorized persons should operate this vehicle. Anyone who operates the vehicle should have a motor vehicle license.

5. This vehicle is designed to carry **One Operator,** and **One Passenger. Never** carry more than one passenger on the vehicle.

6. Never operate the vehicle when under the influence of drugs or alcohol.

7. Become familiar with the controls and know how to stop the engine quickly.

8. Keep all shields, safety devices, and decals in place. If a shield, safety device, or decal is malfunctioning, illegible, or damaged, repair or replace it before operating the vehicle.

9. Always wear substantial shoes. Do not operate vehicle while wearing sandals, tennis shoes, or sneakers. Do not wear loose fitting clothing or jewelry which could get caught in moving parts and cause personal injury.

10. Wearing safety glasses, safety shoes, long pants, and a helmet is advisable and required by some local safety and insurance regulations.

11. Keep everyone, especially children and pets, away from the areas of operation.

12. Before operating the vehicle, always check all parts of the vehicle and any attachments. If something is wrong, **stop using the vehicle**. Make sure the problem is corrected before vehicle or attachment is operated again.

13. Since gasoline is highly flammable, handle it carefully.

A. Use an approved gasoline container.

B. Do not remove cap from fuel tank when engine is hot or running.

C. Do not smoke while handling gasoline.

D. Fill fuel tank outdoors and to approximately one inch below top of tank, (bottom of filler neck). Do not overfill.

E. Wipe up any spilled gasoline.

14. The MULTI PRO® 5500 is equipped with a Neutral Lock-Out Switch. The purpose of this switch is to insure that the vehicle will **not** start unless the Traction Pedal is in the NEUTRAL position. Should the vehicle start when the Traction Pedal is **not** in the NEUTRAL position, shut off the engine and refer to the Traction Drive Maintenance instructions on pages 43 and 44.

⚠ SAFETY INSTRUCTIONS

WHILE OPERATING

WARNING: Do not run engine in a confined area without adequate ventilation. Exhaust fumes are hazardous and could possibly be deadly.

15. Operator and passenger should remain seated whenever the vehicle is in motion. Operator should keep both hands on steering wheel whenever possible, and passenger should use hand holds provided. Keep arms and legs within the vehicle body at all times. Remember your passenger may not be expecting you to brake or turn and may not be ready.

16. Sit on seat when starting and operating the vehicle.

17. When starting the engine:

A. Engage the Parking Brake.

B. Make sure Traction Pedal is in NEUTRAL. Move the Throttle Lever to 1/4 to 1/3 throttle.

C. After engine is started, release parking brake and keep foot off traction pedal. The vehicle must not move. If movement is evident, the neutral return mechanism is adjusted incorrectly. Shut engine off and refer to the Traction Drive Maintenance section on pages 43 and 44.

18. Operator and passenger must be skilled and trained in how to drive on hillsides. Failure to use caution on slopes or hills may cause loss of control and vehicle to tip or roll, possibly resulting in personal injury or death.

19. Using the vehicle demands attention. Failure to operate vehicle safely may result in an accident, tip over of vehicle and serious injury or death. Drive carefully. To prevent tipping or loss of control:

A. Use extreme caution, reduce speed and maintain a safe distance around sand traps, ditches, creeks, ramps, and any unfamiliar areas, or other hazards.

B. Watch for holes or other hidden hazards.

C. Always reduce speed before starting up or down a hill. Do not start or stop suddenly when traveling uphill or downhill. Use caution when operating vehicle on a steep slope. Normally travel straight up and down slopes. Avoid turning on hillsides whenever possible. Reduce speed when making sharp turns or when turning on hillsides.

D. If engine stalls or loses power and cannot make it to the top of a slope, do not turn vehicle around. Always back slowly straight down the slope.

E. Use extra caution when operating vehicle on wet surfaces, at higher speeds or with a full load. Stopping time will increase with a full load.

F. Operate vehicle with extra caution when handling off-center loads that cannot be centered.

G. Avoid sudden starts and stops. Do not go from reverse to forward or forward to reverse without first coming to a complete stop.

H. Do not attempt sharp turns or abrupt maneuvers or other unsafe driving actions that may cause a loss of vehicle control.

I. Before backing up, be sure no one is behind the vehicle. Back up slowly.

J. Watch out for traffic when near or crossing roads. Always yield the right of way to pedestrians and other vehicles. This vehicle is **not** designed for use on streets or highways. Always signal your turns and stop early enough to let other people know what you plan to do. Obey all traffic rules and regulations.

K. Never operate vehicle in or near an area where dust or fumes which are explosive, are in the air. The electrical and exhaust systems of the vehicle can produce sparks capable of igniting explosive materials.

L. Watch out for and avoid low overhangs such as tree limbs, door jambs, overhead walkways, etc. Make sure there is enough room overhead to easily clear the vehicle and your head.

M. If ever unsure about safe operation, STOP WORK and ask your supervisor.

⚠ SAFETY AND INSTRUCTIONS

20. Do not touch Engine, Muffler, or Muffler Shield while engine is running or soon after it has stopped because these areas may be hot enough to cause burns.

21. If the vehicle ever vibrates abnormally, stop immediately, turn off engine, wait for all motion to stop, and inspect for damage. Repair all damage before commencing operation.

22. Before getting off the seat:

A. Remove foot from Traction Pedal, stopping movement of the vehicle.

B. Set Parking Brake.

C. Shut engine off.

D. Remove Key from Ignition Switch.

E. Do not park on slopes unless wheels are chocked or blocked.

MAINTENANCE

23. Before servicing, lubricating or making adjustments to the vehicle, stop engine, set Parking Brake and remove Key from Ignition Switch to prevent accidental starting of the engine.

24. Make sure the vehicle is in safe operating condition, keeping all nuts, bolts, and screws tight.

25. To reduce potential fire hazard, keep the engine area free of excessive grease, grass, leaves, and accumulation of dirt. Do not wash a warm engine or electrical components.

26. Make sure all hydraulic line connectors are tight, and all hydraulic hoses and lines are in good condition before applying pressure to the system.

27. Keep body and hands away from pin hole leaks in hydraulic lines that eject high pressure hydraulic fluid. Use cardboard or paper to find hydraulic leaks. Hydraulic fluid escaping under pressure can penetrate skin and cause injury. Fluid accidentally injected into the skin must be surgically removed within a few hours by a doctor familiar with this form of injury, or gangrene may result.

28. Before disconnecting or performing any work on the hydraulic system, all pressure in the system must be relieved by stopping the engine.

29. If major repairs are ever needed or assistance is required, contact an Authorized TORO Distributor.

30. Disconnect battery before servicing the vehicle. If battery voltage is required for troubleshooting, temporarily connect the battery.

31. If the engine must be running to perform maintenance, or an adjustment, keep hands, feet, clothing, and any parts of the body away from the engine and any moving parts. Keep everyone away.

32. Do not over-speed engine by changing Governor settings. Maximum engine speed is 3200 no-load rpm. To assure safety and accuracy, have an Authorized TORO Distributor check maximum engine speed with a tachometer.

33. Shut engine off before checking or adding oil to the crankcase.

34. To assure optimum performance and continued safety of the vehicle, always use genuine TORO replacement parts and accessories. Replacement parts and accessories made by other manufacturers could be dangerous. Altering this vehicle in any manner may affect the vehicle's operation, performance, durability, or its use may result in injury or death. Such use could also void the product warranty of the TORO Company.

35. This vehicle should not be modified without The Toro Company's authorization. Direct any inquiries to:

Hahn Equipment Co.
A subsidiary of The Toro Company
1625 N. Garvin Street
Evansville, IN 47711-4596

SPECIFICATIONS

Vehicle: Four-wheel step through, out front operator style, two person vehicle.

Engine: Ford, 4 cycle, 4 cylinder, overhead valve, liquid cooled gas engine with centrifugal water pump. Ford rates engine at 45 HP. Mechanically governed to a maximum speed of 3200 ± 100 rpm. 79 cu. in. (1300 cc) displacement. Distributorless electronic ignition. 3.5 quart (3.25 liter) oil capacity; replacement oil filter. Forged connecting rods, cast iron cylinder head and block. Mechanical fuel pump.

Air Cleaner: Heavy duty, 2 stage, remote mounted.

Battery: 12 volt with 420 cold cranking amps at 0° F.

Cooling System: Mid mounted radiator with oil cooler mounted in front of radiator. Cooling system capacity is 12 quarts (11.5 liters) of 50/50 mixture of ethylene glycol anti-freeze.

Fuel System: Capacity is approximately 10.6 gallon (40 liters) of lead-free gasoline.

Traction System: Servo-controlled hydrostatic system driving double planetary gear reduction rear wheel drives. Foot pedal control of forward/reverse ground speed.

Frame: Welded, high strength steel tubing.

Front Suspension: Straight axle with twin independent leaf springs, dual shock absorbers.

Rear Suspension: Rigid frame.

Tires: Front: 23 x 10.5 x 12, 4-ply rating, turf tread.
Rear: 26.5 x 14 x 12, 4-ply rating, turf tread.

Brakes: Individual totally enclosed, multi-disc, wet brakes and parking brakes on rear traction wheels. Hydrostatic braking through traction drive.

Steering: Full hydraulic power with dedicated power source.

Seats: Twin molded cushions and back rests, with hip restraints.

Electrical Features: 12 volt, 420 cold cranking amperes at 0° F, maintenance free battery. 51 amp alternator with I/C regulator. Automotive type electrical system. Traction interlock switch.

Controls: Foot operated traction pedal, brake, brake lock pedals, and remote boom on/off switch. Hand operated throttle, speed control, choke control, ignition switch, light switch, pressure increase/decrease, master boom on/off, hydraulic spray pump, agitator, and individual boom on/off switches.

Gauges: Sprayer pressure gauge, engine oil pressure warning light, temperature gauge, voltmeter, and hour meter.

Lights: Twin halogen headlights.

Ground Speed:	Working	2 - 6 mph
	Transporting	0 - 11.5 mph
	Reverse	0 - 4 mph

Sprayer Tank: 300 gallon capacity.

Spray Pump: Closed impeller hydraulic driven centrifugal. Adjustable hydraulic drive. 120 gpm (454 lpm), 100 psi (690 kpa) maximums.

Boom Assembly: Three section, 18.5 foot (5.6 meter) working width.

Nozzles: Drift reduction, quick disconnect with diaphragm check valves.

General Specifications (approx.):

Base Weight:	Base unit	1,750 lbs.
With standard spray sys. and operator:	dry	2,540 lbs.
	full	5,040 lbs.
Maximum Gross Vehicle Weight:		6,040 lbs.

Measurements with spray system:

Overall Width:	72"
Overall Length:	136"
Height:	57-1/2"
Ground Clearance:	6-1/2"
Wheel Base:	78"

⚠ SAFETY AND INSTRUCTION DECALS

The following safety and instruction decals are installed on the vehicle. If any become damaged or illegible, replace them. Decal part numbers are listed below and in the parts catalog. Order replacements from your Authorized TORO Distributor.



Part No. 36-3400: One Located on right Front Fender, One on left Front Fender.



Part No. 94-7171: Located on Dash Panel, right of Light Switch.

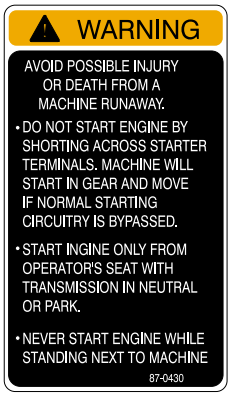

Part No. 87-0430: Located behind Left Front Fender.



Part No. 87-0450: Located on left side of Center Console.



Part No. 71-3730: Located on top of Gasoline Tank.



Part No. 87-0580: Located on Left Front Fender.



Part No. 87-0500: Located on Dash Panel, above Key Switch.

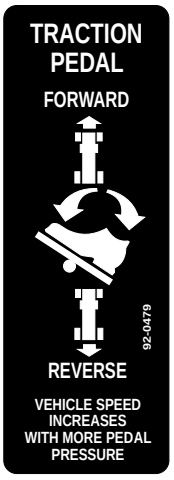

Part No. 92-0479: Located on Floorboard, right of Traction Pedal.

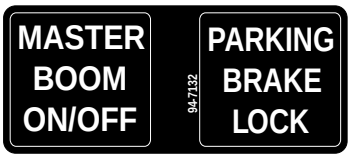

Part No. 94-7132: Located on Floor Board, left of Brake Lock Pedal.



Part No. 85-4730: Located on top of Hydraulic Tank.



Part No. 94-7172: Located on left side of Dash Panel, under Steering Wheel.



Part No. 94-7173: Located on Dash Panel, above Indicator Lights.



Part No. 93-0688: Located on Spray Tank Lid.



Part No. 95-2136: Located on the right end of the Dash.

⚠ SAFETY AND INSTRUCTION DECALS

The following safety and instruction decals are installed on the vehicle. If any become damaged or illegible, replace them. Decal part numbers are listed below and in the parts catalog. Order replacements from your Authorized TORO Distributor.



Part No. 62-5550: Located on Front of Front Console.



Part No. 65-3090: Located on left side of Dash Panel.

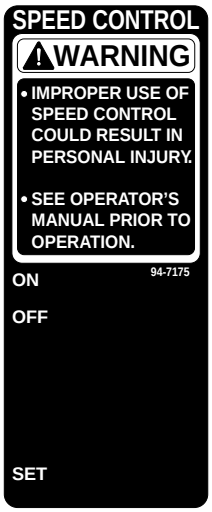

Part No. 94-7175: Located on Dash Panel, right of Steering Wheel.



Part No. 94-7176: Located on Dash panel, under grab bar.

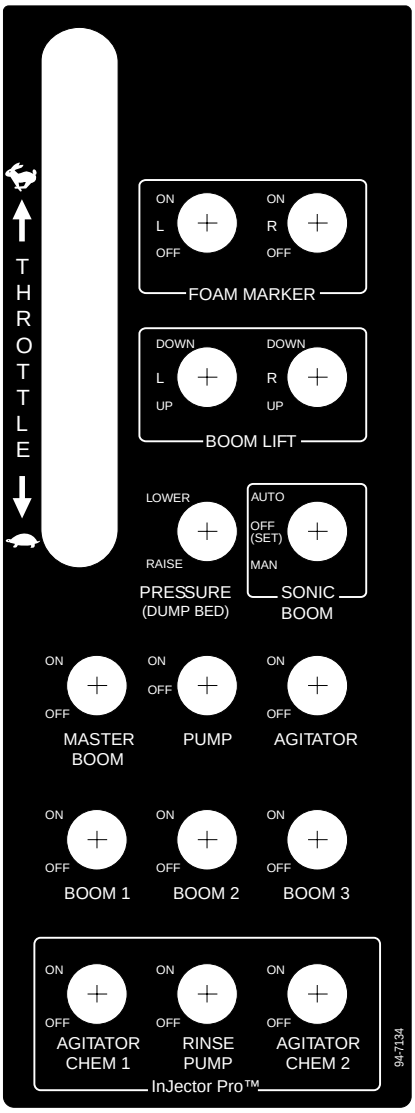

Part No. 94-7134: Located on the Center Console.



Part No. 42958: Located on left radiator brace.



Part No. 87-0570: Located on Rear Tank Band.

MULTI PRO 5500

Part No. 94-7133: Located on Front of Front Console.

SET-UP INSTRUCTIONS

BATTERY SERVICE:

⚠ CAUTION

Electrolyte gases are explosive and can cause serious injury to eyes, lungs, and skin. Nausea may result if the gases are inhaled.

- **Wear safety goggles and rubber gloves when working with electrolyte or battery.**
- **Charge the Battery in a well ventilated place so gases produced while charging can dissipate.**
- **Unplug charger from electrical outlet before connecting to or disconnecting charger leads from battery posts.**
- **Since the gases are explosive, keep open flames and electrical spark away from the battery; DO NOT SMOKE!**

The Battery has been filled with electrolyte and charged at the factory. However, prior to actual operation, it may be necessary to bring the Battery to a full charge as follows:

1. **First** disconnect the **black negative (-)** cable, then disconnect the **red positive (+)** cable.

2. Connect a 3 to 4 amp battery charger to the Battery Posts. Charge the Battery at a rate of 3 to 4 amperes for 4 to 8 hours.

3. When Battery is charged, disconnect the charger from electrical outlet and battery posts.

IMPORTANT! If optional electric powered equipment is to be installed on the MULTI PRO® 5500, DO NOT connect the battery cables until all wiring harness connections for the optional equipment have been completed. If accidentally grounded, the lead to the battery terminal will burn the accessory's wiring harness. After the accessory's wiring harness has been connected, proceed as follows:

4. Connect the **red positive (+)** cable to the **positive (+)** post on the battery **first**, then connect the **black negative (-)** cable to the **negative (-)** post on the battery. Secure with cap screws and nuts. Slide the rubber boot over the positive terminal to prevent short-out from occurring.

⚠ WARNING

Connecting cables to the wrong post could cause the battery to explode, resulting in personal injury and damage to the electrical system.

- **Make sure Battery Cables do not interfere or rub on any moving or hot parts.**

SET-UP INSTRUCTIONS

⚠ CAUTION

Chemicals are hazardous and can cause personal injury!

- **Securely tighten all sprayer hose clamp connections during initial set-up to prevent leaks and hose blow-offs while spraying system is in operation.**

SPRAY SYSTEM:

NOTE: In the following instructions, "sealer" refers to the Teflon Thread Tape.

1. Apply a heavy coating of grease to the tubes of the two Boom Mount Assemblies and insert them into the Vehicle Frame until Stop Pin bottoms out against Vehicle Frame. (See FIG. 1.)

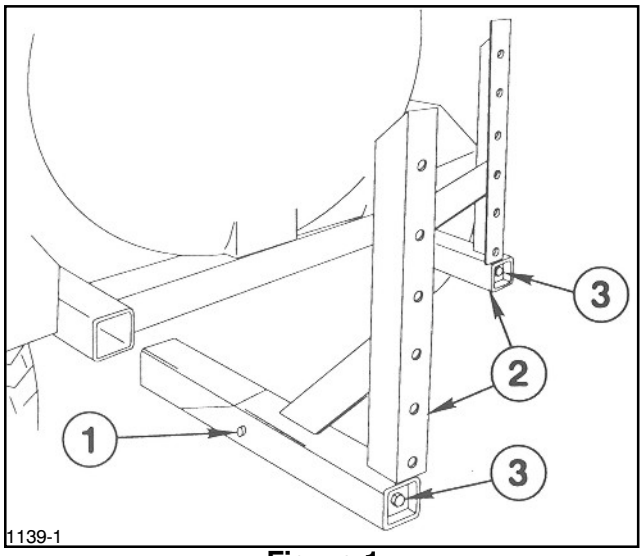

Figure 1

1. Stop Pin **3. 1/2" x 18" screws**
2. Boom Mount Ass'y.

2. Using a torque wrench, tighten the 1/2" x 18" screws that join the Wedges to the Boom Mounts. Tighten to 50 ft. lbs.

NOTE: If installing the "Enclosed Boom" option in place of the Standard Boom, DO NOT install the (2) Boom Hold-In Assemblies in Step 3 or the (2) Boom Mounting Brackets in Step 4.

.

3. Install the two (2) Boom Hold-In Assemblies and the Angle Crossmember to the top of the Boom Mount uprights as shown in FIG. 2, using four (4) 1/2" x 1-1/4" cap screws, flat washers and lock nuts.

4. Attach the two "U"-shaped Boom Mounting Brackets to the bottom of the Boom Mount uprights with four (4) 1/2" x 1-1/4" cap screws, and lock nuts. (See FIG. 2.)

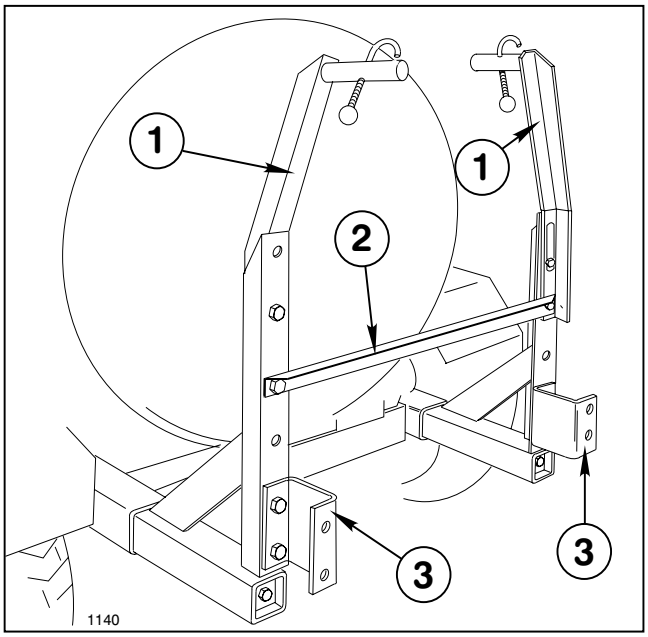

Figure 2

1. Boom Hold-In Ass'y. **3. Boom Mounting Bracket**
2. Angle Crossmember

5. Attach the Solenoid Assembly to the Angle Crossmember with four (4) 5/16" hex head cap screws and hex nuts. (See FIG. 3.)

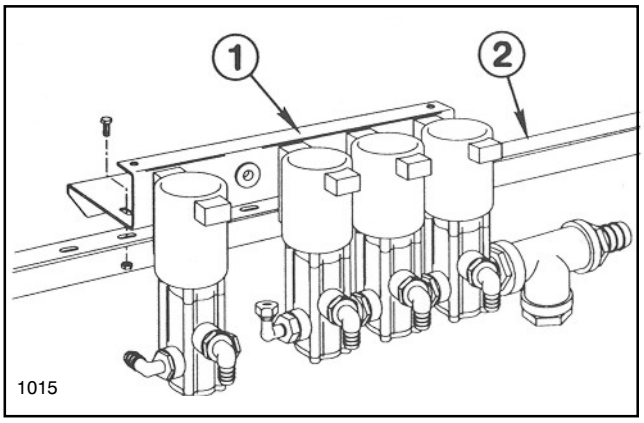

Figure 3

1. Solenoid Ass'y **2. Angle Crossmember**

NOTE: If installing the "Enclosed Boom" option in place of the Standard Boom, skip steps 6-19.

6. Position a Spacer Tube between the lugs on each side of the Main Frame tube. Insert a 1/2" x 2-1/2" cap screw through the lugs and spacers. Secure the Main Frame to the Boom Mounting Brackets with lock nuts. (See FIG. 4.)

SET-UP INSTRUCTIONS

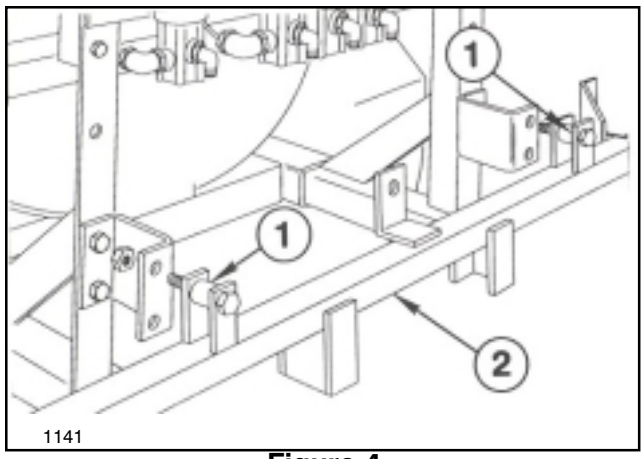

Figure 4

1. Spacer Tube
2. Main Frame

7. Position the two (2) Center Boom angles on the Main Frame and secure them to the Main Frame tube with two (2) square U-bolts, four (4) flat washers and hex nuts. (See FIG. 5.)

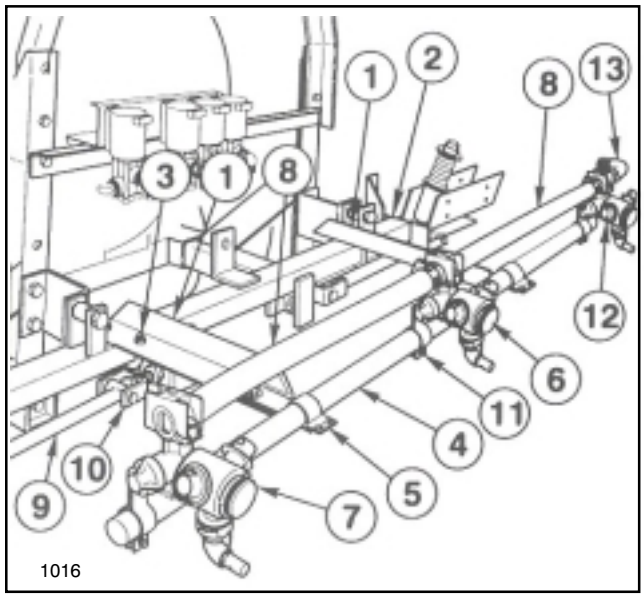

Figure 5

1. Center Boom Angle
2. Main Frame
3. U-bolt
4. Center Boom Pipe
5. Boom Clamp
6. Double Barb Turret
7. Single Barb Turret
8. Jumper Hose
9. Strut Assembly
10. Adjustable Clevis
11. Turret Body Clamp
12. Threaded Barb Turret
13. 90° Hose Barb

8. Center and attach the Center Boom Pipe to the two Center Boom Angles with two (2) clamps, (2) 3/8" x 1" cap screws, flat washers and lock nuts. Once mounted the Center Boom Pipe should be approx. 20" from ground.

9. Loosely attach the Double Barb Turret Body with the Turret Body Clamp in the approximate center of the Center Boom Pipe. For the most uniform spray coverage, position all Nozzles level as shown in FIG. 5.

10. Loosely attach a Single Barb Turret Body with the Turret Body Clamp to LH end of the Center Boom Pipe. Loosely attach a threaded Turret Body with the Turret Body Clamp to RH end of the Center Boom Pipe.

11. Place two Hose Clamps on two 3/4" x 19" Jumper Hoses and connect the two "end" Turret Bodies to the Double Barb Turret Body. Space nozzles 20" apart and tighten fasteners securely. Apply thread sealer and install the 90° 3/4" Hose Barb on the Threaded Turret Body. (See FIG. 5.)

12. Attach the two Strut Assemblies to the two adjustable clevis' found on each side of the Main Frame tube with two (2) 1/2" x 2" clevis pins and two (2) 1/8" x 1" cotter pins. (See FIG. 5)

NOTE: If the optional "Foam Marker Kit" is to be installed, refer to the instructions furnished with that kit before proceeding to step 13.

IMPORTANT! DO NOT over-tighten the nuts in steps 13 and 15. The clamping action could crush the Boom Pipe.

13. Insert the plugged end of an Extension Boom Pipe into the Pivot Assembly and secure with four (4) 1/4" x 1-1/4" cap screws and lock nuts. (See FIG. 6) Repeat on the opposite side to assemble the other Extension Boom.

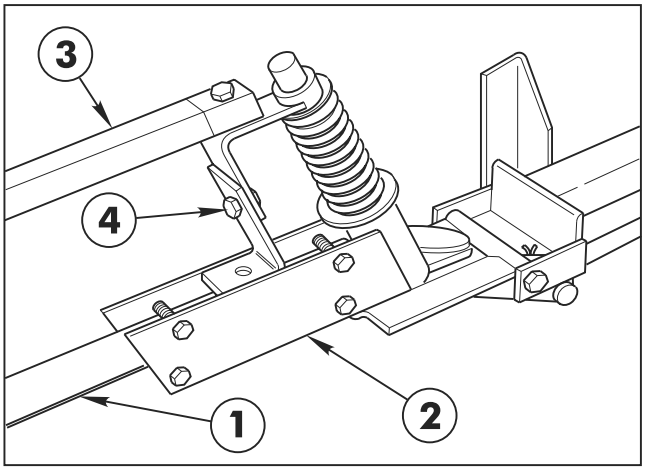

Figure 6

1. Extension Boom Pipe
2. Pivot Assembly
3. Boom Support Assembly
4. Height Adjustment

14. Attach the LH Boom Support Assembly to the Pivot Assembly, using a 5/16" x 1-1/2" cap screw and lock nut. (See FIG. 6 & 7.)

15. Secure the two plates of the Boom Support Assembly to the Extension Boom Pipe, using two (2) 1/4" U-bolts, four (4) lock nuts and flat washers. (See FIG. 7.)

SET-UP INSTRUCTIONS

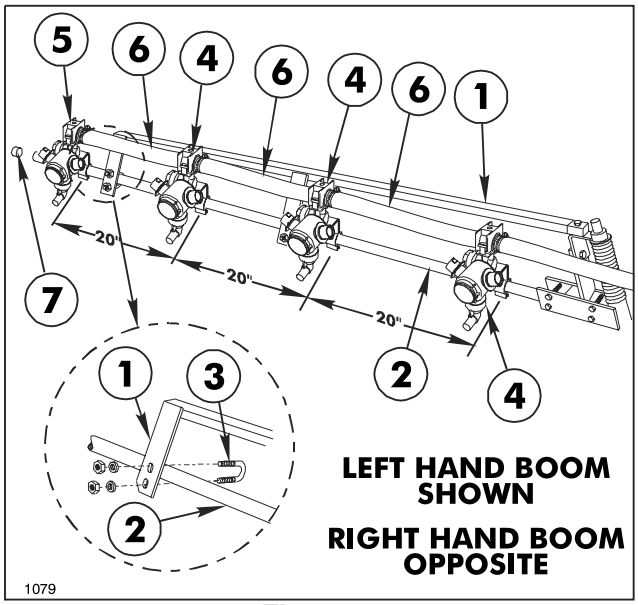

Figure 7

1. Boom Support Ass'y
2. Extension Boom Pipe
3. U-bolt
4. Double Barb Turret
5. Single Barb Turret
6. Jumper Hose 3/4 x 19"
7. Boom Cap
8. Jumper Hose 3/4 x 21"

16. Assemble the RH Boom Support Assembly to the other Extension Boom Pipe.

17. Adjust the Booms to a level position by adjusting the jam nuts on the adjustable clevis assemblies (See FIG. 5) to the desired position, then tighten the end nuts against the Main Frame plate.

18. Attach three Double Barb Turret Bodies and one Single Barb Turret Body with Clamp Assemblies on each Extension Boom Pipe as shown in FIG. 7.

19. Level Nozzles and space 20" apart. Connect the Turret Body Assemblies with 3/4" x 19" Jumper Hoses and a 3/4" x 21" Jumper Hose. Secure with hose clamps. (See FIG. 7.)

20. Apply thread sealer and install a 90° hose barb into the top of the Tee at the pump for Boom supply. Attach one end of the 1-1/4" x 52" Supply Hose to the 90° hose barb, and secure with a hose clamp. (See FIG. 10)

21. Attach the other end of the Supply Hose to the hose barb in Tee at the Solenoid Assembly. Secure with two hose clamps, one clamp at 1/4" and the other clamp at 1-1/4" from the hose barb hex. (See FIG. 8 & 9)

22. Secure the Supply Hose to the Solenoid Assembly using a large "R" clamp. (See FIG. 8)

23. Route wiring harness across rear of vehicle and secure to Solenoid Assembly with a small "R" clamp. (See FIG. 8)

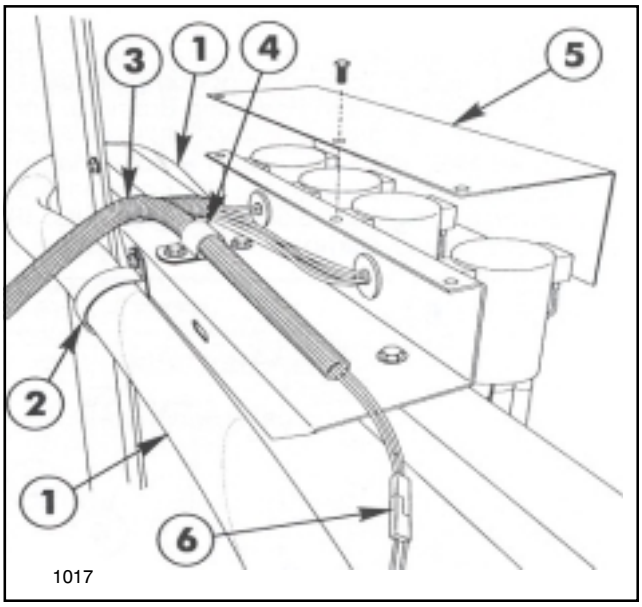

Figure 8

1. Supply Hose
2. Large "R" Clamp
3. Wiring Harness
4. Small "R" Clamp
5. Solenoid Valve Shield
6. Hyd. Control Valve Plug

24. Connect the plug on the wiring harness to the mating plug from the Hydraulic Control Valve. Then make connections to the four solenoid valves as shown in FIG. 8 & 9.

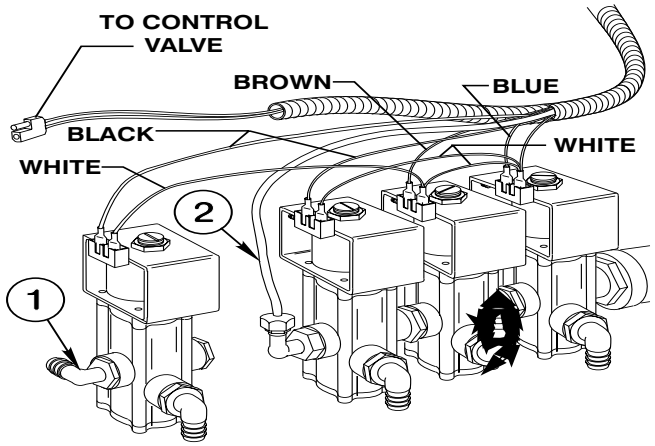

Figure 9

1. 90° Hose Barb
2. Gauge Tube
3. Supply Hose

25. Install Gauge Tube into the 90° street elbow at through port of Solenoid Assembly and secure with Compression Adapter. (See FIG. 9)

26. Install Solenoid Valve Shield to top of Solenoid Mounting Bracket using two (2) 1/4 x 3/8" flange screws. (See FIG. 8)

SET-UP INSTRUCTIONS

27. Apply thread sealer and install Reducing Bushing into side of Tee on top of Pump. Install 1" MPT x 3/4" hose barb into Reducing Bushing, and attach one end of the Agitator Solenoid Feed Hose. (See FIG. 10) Secure with a hose clamp. Attach other end of hose to the 90° hose barb at the side of the Agitator Solenoid. (See FIG. 9) Secure with a hose clamp.

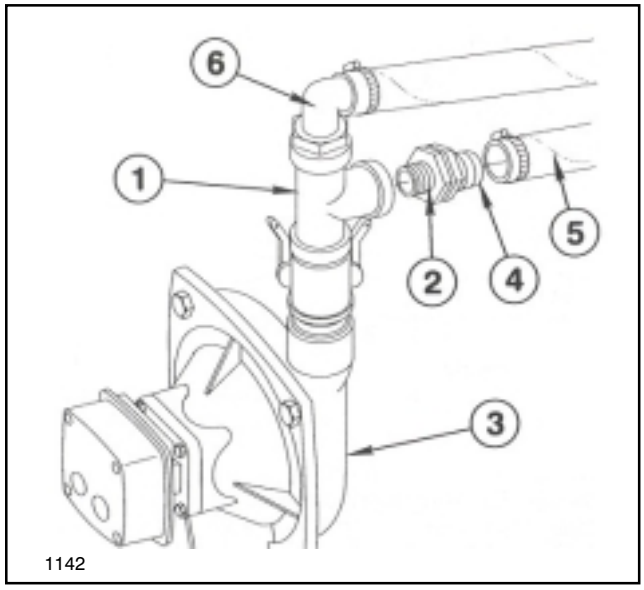

Figure 10

1. **Tee**
2. **Reducing Bushing**
3. **Pump**
4. **Hose Barb**
5. **Agitator Feed Hose**
6. **90° Hose Barb**

NOTE: If installing the "Enclosed Boom" option in place of the Standard Boom, skip Steps 28-30 and refer to the instructions furnished with that kit before continuing with Step 31.

28. Attach the Boom Feeder Hoses to the barbs in the Solenoids with hose clamps.

29. Place a hose clamp on the center Boom Feeder Hose and attach it to the 90° Hose Barb at the RH end of Center Boom Pipe.

30. Place a hose clamp on the right and left Boom Feeder Hoses and attach them to the double barb nozzles on the right and left Boom Pipes.

31. Install the "Anti-Siphon Kit". Instructions and parts are included with your MULTI PRO® 5500 Turf Sprayer.

NOTE: If installing the optional "Foam Marker Kit", refer to the instructions furnished with that kit for remaining set-up procedures.

FRESH WATER TANK (Fig. 11)

1. Mount Brace assembly to the two (2) 5/16" carriage bolts in the right side front Tank Band using two (2) 5/16" flat washers and hex nuts. Tighten securely.

NOTE: Left hold-in assembly and hardware will not be used.

2. Mount Wash Tank Bracket (open end forward) to right-hand Hold-In Brace assembly using two (2) 5/16" x 1" hex hd. cap screws, flat washers, and hex nuts. Place Clean Water Wash Tank into Wash Tank Bracket and secure with Rubber Hold-Down, as shown in FIG. 11.

NOTE: Tighten all fasteners and hose clamps securely before using the spray system.

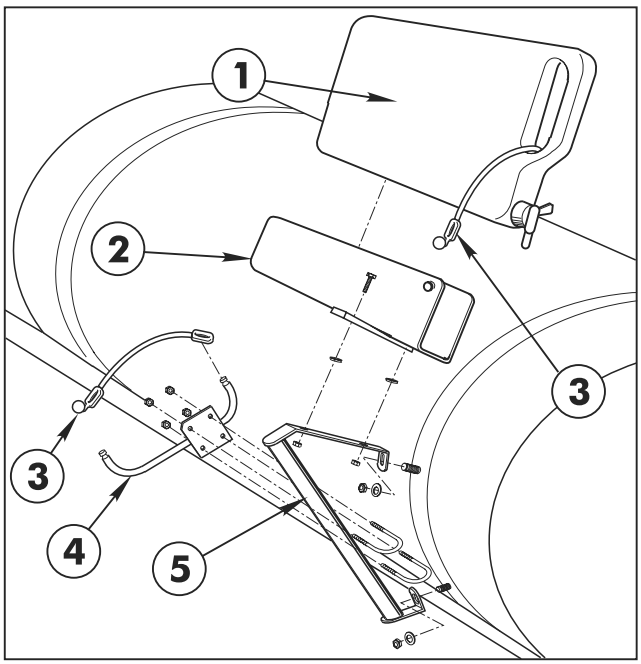

Figure 11

1. **Clean Water Wash Tank**
2. **Wash Tank Bracket**
3. **Rubber Hold-Down**
4. **Boom Hold-In Ass'y**
5. **Hold-In Brace Ass'y**

BEFORE OPERATING

⚠ CAUTION

Servicing the vehicle while the engine is running or vehicle is not properly secured could result in personal injury or death.

- **Before servicing or making adjustments to the vehicle, stop engine, set parking brake, and remove key from the switch.**

CHECK ENGINE OIL (Fig. 12 a, b)

The engine is shipped with approximately 3.5 quarts (3.25 liter) of oil in the crankcase; however, level of oil **must be checked before and after the engine is first started.**

1. Position vehicle on a level surface. Tilt right seat forward to gain access to the engine compartment.

2. Remove dipstick from oil tube, wipe clean, and reinstall into the tube. Pull it out again and check oil level on dipstick. Oil level must be maintained between the minimum and maximum marks on the dipstick.

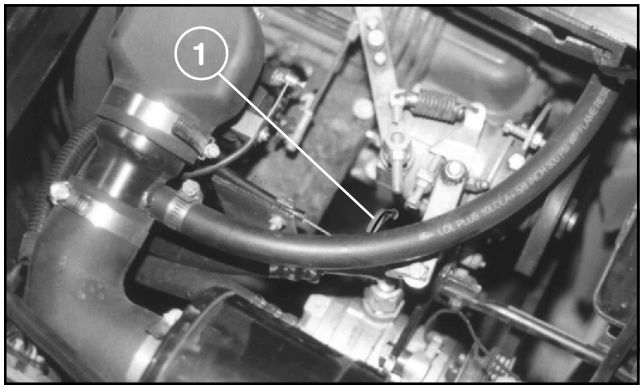

Figure 12 a

1. Oil Dipstick

3. If oil level is low, tilt drivers side seat forward, remove oil fill cap, and add Ford or Motorcraft oil or equivalent that meets Ford Specification ESE-M2C153-E and API categories SG, SG/CC or SG/CD until level is between the "MIN" and "MAX" marks on the dipstick. DO NOT OVERFILL. See viscosity chart for recommended weight to use.

4. Install the dipstick firmly in place.

5. Install oil fill cap.

6. Close access door and secure handle.

7. Lower seat to original seating position.

IMPORTANT! Check level of oil BEFORE EACH USE, while engine is cool so the oil has had some time to drain into the sump.

SINGLE VISCOSITY OILS	
Outside Temperature	
- 10°F to +60°F	SAE 10W
+10°F to +90°F	SAE 20W-20
Above +32°F	SAE 30
Above +50°F	SAE 40

MULTI-VISCOSITY OILS	
Outside Temperature	
Below +60°F	SAE 5W-30
- 10°F to +90°F	SAE 10W-20
Above -10°F	SAE 10W-40 or 10W50
Above +50°F	SAE 20W-40 or 20W50

Change oil and filter after the first 50 hours of operation. Thereafter, change oil and filter after every 100 hours of operation. Change oil more frequently when engine is operated in extremely dusty or dirty conditions. See page 32.

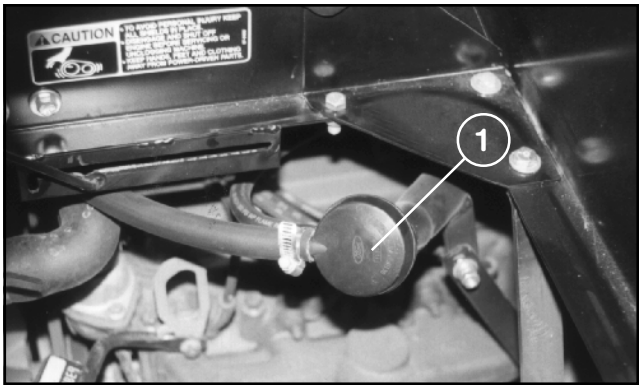

Figure 12 b

1. Filler Cap

⚠ CAUTION

If engine has been running, pressurized hot coolant can escape and cause burns if cap is removed.

- **Before removing cap, allow engine to cool for at least 15 minutes or until the cap is not hot to the touch.**

CHECK COOLING SYSTEM (Fig. 13)

Capacity of system is 12 quarts (11.5 liters). The cooling system is filled with a 50/50 solution of water and permanent ethylene glycol anti-freeze. Check level of coolant at beginning of each day before starting the engine.

1. Park machine on level surface and fold seats forward.

2. When engine is cool remove radiator cap and check coolant level. Coolant level should be approximately 3/4 to 1-1/2 inches below the filler neck seat when the coolant is cold.

3. If coolant is low, add a 50/50 mixture of water and antifreeze. **DO NOT USE WATER ONLY OR ALCOHOL/METHANOL BASE COOLANTS.**

4. Replace radiator cap securely.

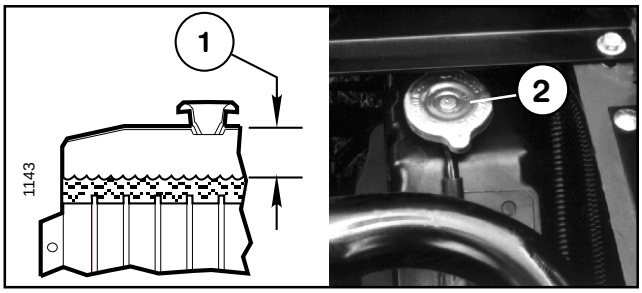

Figure 13

1. Coolant level (3/4 to 1-1/2 inches below cap seal.)

2. Radiator cap.

BEFORE OPERATING

FILL FUEL TANK (Fig. 14)

Fuel tank capacity is 10.6 gallons (40 liters).

THE TORO COMPANY STRONGLY RECOMMENDS THE USE OF FRESH, CLEAN **UNLEADED** REGULAR GRADE GASOLINE IN TORO GASOLINE POWERED PRODUCTS. UNLEADED GASOLINE BURNS CLEANER, EXTENDS ENGINE LIFE, AND PROMOTES GOOD STARTING BY REDUCING THE BUILDUP OF COMBUSTION CHAMBER DEPOSITS. MINIMUM OCTANE RATING OF 87.

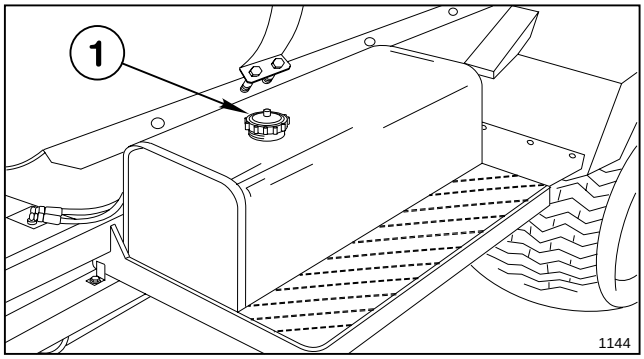

Figure 14

1. Fuel tank cap.

IMPORTANT! NEVER USE METHANOL, GASOLINE CONTAINING METHANOL, GASOLINE CONTAINING MORE THAN 10% ETHANOL, GASOLINE ADDITIVES, OR WHITE GAS. ENGINE FUEL SYSTEM DAMAGE COULD RESULT.

1. Clean area around fuel tank cap.

2. Remove fuel tank cap.

3. Fill tank to about one inch below top of tank (bottom of filler neck). **DO NOT OVERFILL.** Then install cap.

4. Wipe up any fuel that may have spilled to prevent a fire hazard.

FUEL GAUGE: The Fuel Tank Cap shows amount of fuel in tank.

⚠ DANGER

Because gasoline is flammable, caution must be used when storing or handling it. Do not fill fuel tank while engine is running, hot, or when vehicle is in an enclosed area. Vapors may build up and be ignited by a spark or flame source many feet away. DO NOT SMOKE while filling the fuel tank to prevent the possibility of an explosion. Always fill fuel tank outside and wipe up any spilled gasoline before starting the engine. Use a funnel or spout to prevent spilling gasoline, and fill tank no higher than one inch below top of tank, (bottom of filler neck). DO NOT OVER FILL. Store gasoline in a clean safety approved container and keep the cap on the container. Keep gasoline in a cool, well ventilated place; never in an enclosed area such as a hot storage shed. To assure volatility, do not buy more than a 30 day supply of gasoline. Gasoline is a fuel for internal combustion engines; therefore do not use it for any other purpose. Since many children like the smell of gas, keep it out of their reach because the fumes are explosive and dangerous to inhale.

BEFORE OPERATING

CHECK HYDRAULIC FLUID (Fig. 15)

IMPORTANT! ALWAYS USE EXTREME CAUTION WHEN FILLING THE RESERVOIR OR CHECKING THE LEVEL OF THE HYDRAULIC FLUID. KEEP THE SYSTEM FREE OF CONTAMINANTS.

1. Position vehicle on a level surface, set parking brake, and stop the engine

2. Clean area around filler neck and cap of hydraulic tank. Remove cap from filler neck.

3. If level is low, add appropriate fluid to raise level to two inches from top of the tank (bottom of strainer) DO NOT OVERFILL.

4. Install cap onto filler neck.

5. Start engine.

6. Turn the steering wheel completely to the left, then completely to the right.

7. Turn off the engine and recheck level of hydraulic fluid. Replenish as required.

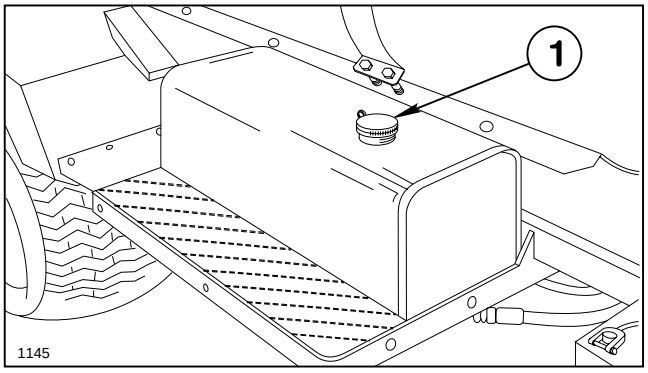

Figure 15

1. Hydraulic fluid tank cap.

The vehicle's reservoir is filled at the factory with approximately 12 gallons (45.42 liters) of Mobil 424 hydraulic fluid. **Check level of hydraulic fluid before engine is first started and daily thereafter.**

BEFORE OPERATING

CHECK PLANETARY GEAR OIL (Fig. 16)

Check oil if external leakage is noted. Use high quality SAE 85W-140 wt. gear lube replacement.

Capacity of system is 16 oz.

1. With machine on level surface, position wheel so check/drain plugs are at the 9 and 12 o'clock position.

2. Remove the 9 o'clock positioned plug. Oil should be to bottom of the hole.

3. If necessary add gear oil to the 12 o'clock hole until oil begins to flow from the 9 o'clock hole.

4. Wipe surface clean and reinstall plugs.

5. Repeat steps 1 through 4 on opposite gear assembly.

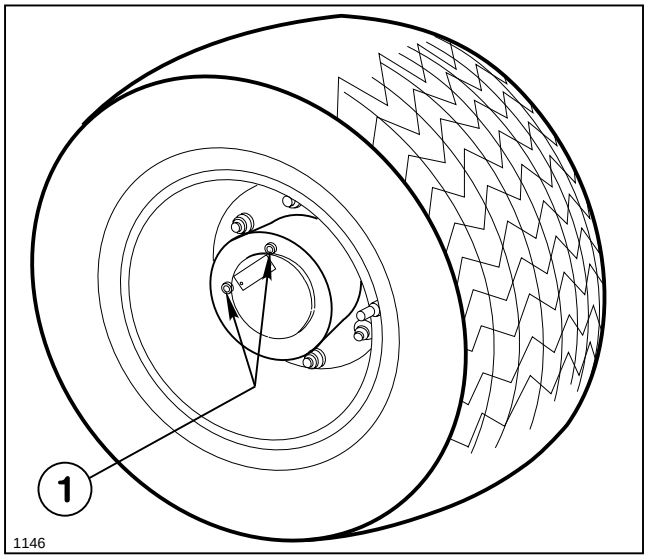

Figure 16

1. Check/Drain Plugs

CHECK EMERGENCY/PARK BRAKE

Adjust the Emergency/Park Brake when there is more than 1 inch of "free travel" of the Brake Pedal, or if the Brake does not work effectively. "Free travel" is the distance the Brake Pedal moves before braking resistance is felt. To reduce "free travel" of brake pedal see the MAINTENANCE section on "ADJUSTING BRAKES".

⚠ DANGER

Operating the vehicle with worn or poorly adjusted brakes can result in serious injury or death.

- **If Brake Pedal travels to within 1 inch of the Vehicle floor board, the brakes must be adjusted or repaired.**

CHECK TORQUE OF WHEEL NUTS

⚠ WARNING

Failure to maintain proper torque could result in failure or loss of wheel and may result in personal injury.

- **Torque front wheel nuts to 55-65 ft-lb (75-88N-m) and rear wheel nuts or bolts to 85-100 ft-lb (116-136 N-m) after 1-4 hours of operation and every 200 hours thereafter.**

IMPORTANT! After the "initial run-in" (approximately one to two hours) check all the MULTI PRO® 5500 wheel fasteners for tightness.

CHECK TIRE PRESSURE

Check tire pressure every 8 hours or daily to assure proper levels. **Maximum** air pressure in both front and rear tires is 18 p.s.i.

The air pressure needed is determined by the payload carried. Once the desired pressure has been ascertained, it is to be used and maintained to insure the accuracy of the spraying system.

INSPECT TIRES

Check tire condition for wear or damage. Operating accidents, such as hitting curbs, can damage a tire or rim and also disrupt wheel alignment, so inspect tire condition after any accident.

VEHICLE CONTROLS

Familiarize yourself with the controls and recommended operating procedures before operating the MULTI PRO® 5500.

TRACTION PEDAL: (Fig. 17) Controls forward and reverse operation. Depress top of pedal to move forward and bottom of pedal to move backward. Ground speed depends on how far pedal is depressed. For maximum ground speed, fully depress pedal while throttle is in FAST.

To stop, reduce foot pressure on traction pedal and allow it to return to center position.

EMERGENCY/PARKING BRAKE PEDAL: (Fig. 17) Functions as a parking brake and an emergency brake in situations demanding an immediate stop.

BRAKE LOCK: (Fig. 17) The small pedal to the left side of the brake pedal actuates the parking brake lock. To engage parking brake, fully depress brake pedal and depress brake lock which locks brake pedal. To release parking brake, fully depress brake pedal to release brake lock.

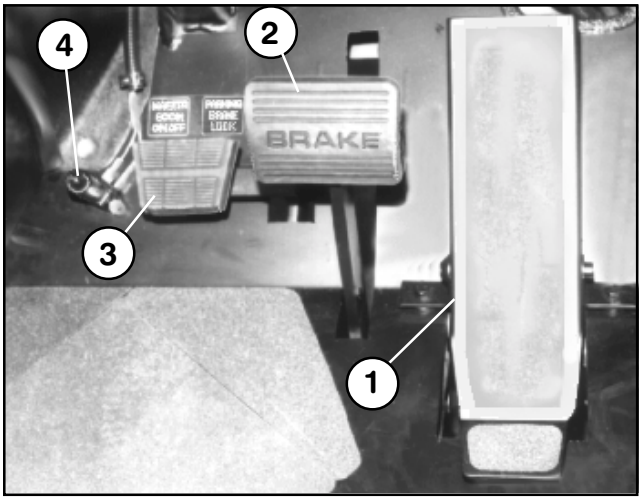

Figure 17

1. Traction Pedal
2. Brake Pedal
3. Brake Lock
4. Remote Master Switch

REMOTE BOOM ON/OFF SWITCH: (Fig. 17) Is in series with the MASTER BOOM ON/OFF switch; The operator must first turn on the Master Boom ON/OFF switch on the center console; then click on the Remote Boom ON/OFF Switch on the floor board.

THROTTLE CONTROL: (Fig. 18) Move control forward, toward "FAST", to increase engine speed, rearward, toward "SLOW", to decrease engine speed. Set at 1/4 to 1/3 throttle when starting engine.

MANUAL CHOKE: (Fig. 18) Pull OUT when starting cold engine, gradually push IN after successfully starting engine.

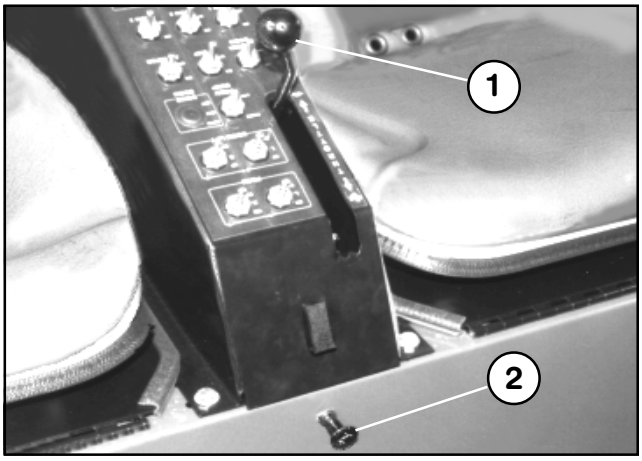

Figure 18

1. Throttle control
2. Manual Choke

VEHICLE CONTROLS

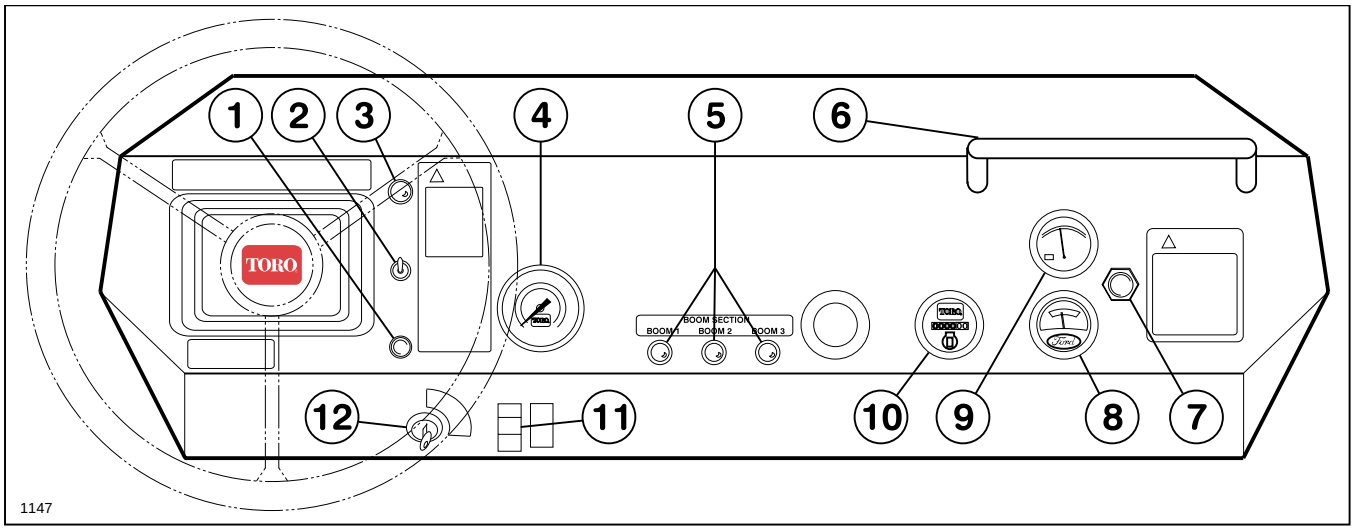

INSTRUMENT PANEL LAYOUT

SPEED CONTROL: Vehicle may be set at a desired speed. Ground speed will vary slightly in accordance with the slope of the terrain.

1. ENABLE BUTTON: When depressed, activates the Speed Control.

2. TOGGLE SWITCH: Turns Speed Control "ON" or "OFF".

3. INDICATOR LIGHT: When lit, indicates Speed Control is on.

4. PRESSURE GAUGE: Indicates the pressure at which the Spray System is operating
.

5. BOOM INDICATOR LIGHTS: When lit, indicates which Boom section(s) is on.

6. PASSENGER HAND HOLD: Right side of dash panel.

7. ENGINE OIL PRESSURE WARNING LIGHT: Indicates dangerously low oil pressure. If light comes on with the engine running, STOP as soon as possible and correct the cause of low oil pressure before restarting the engine.

8. COOLANT TEMPERATURE GAUGE: Indicates the temperature of the engine coolant when the ignition switch is in the ON position. The pointer will move to the NORMAL band as the engine warms up. When operating in hot weather or with very heavy loads, the pointer may read at the very top of the NORMAL band. If the pointer moves out of the NORMAL band into the H (hot) position, the engine is overheating and engine damage may result. If there is no apparent loss of coolant from the cooling system, idle the engine for two minutes, then turn off the engine and let it cool.

9. VOLT METER: Indicates the battery voltage when the ignition key is in the ON position. After the engine is started, the pointer will move into the white marked area, and in normal operation, remain there. (12.8-14.8 volts) If the pointer remains in either red marked area, have the engine's electrical system checked.

10. HOUR METER: Shows total hours that vehicle has been operated.

11. HEADLAMP SWITCH: Turns Headlamps ON and OFF.

12. IGNITION SWITCH: NOTE: THIS IS A FOUR POSITION SWITCH. The "ACC" position is not used on the MULTI PRO® 5500 Turf Sprayer. In the "OFF" position, the switch disconnects the electrical system from the battery. The key can be removed from the switch when it is in this position. In the "ON" position, the electrical system is activated. Engage the starter by turning the key to the "START" position. Release the key when the engine starts and it will return to the "ON" position.

OPERATING INSTRUCTIONS

PRE-STARTING CHECKS

Safe operation begins before taking the vehicle out for a day's work. You should check these items each time:

1. Check tire pressure. (See page 19)

NOTE: These tires are different than car tires, they require less pressure to minimize turf compaction and damage.

2. Check all fluid levels and add the appropriate amount of TORO specified fluids if any are found to be low.

3. Check Brake Pedal operation.

4. Check to see that the lights are working.

5. Check for oil leaks, loose parts, or any other noticeable malfunctions. Make sure engine is off and all moving parts have stopped before checking for oil leaks, loose parts, and any other malfunctions.

If any of the above items are not correct, notify your mechanic or check with your supervisor before taking the vehicle out for the day. Your supervisor may want you to check other items on a daily basis, so ask what your responsibilities are.

STARTING ENGINE

⚠ WARNING

Engine exhaust gases contain poisonous carbon monoxide.

- **Carbon monoxide is odorless, colorless and can cause death if inhaled.**
- **Avoid inhaling exhaust fumes and never run the engine in a closed building or confined area.**

1. Sit on Operator's Seat and engage Parking Brake.

2. Make sure Traction Pedal is in NEUTRAL position.

3. Make sure Spray System is in the "OFF" position.

3. Move the Throttle Lever 1/4 to 1/3 throttle.

4. Pull the Choke Control out to full choke position, if cold starting engine.

5. Insert Key into Ignition Switch and rotate it clockwise to start engine. Release Key when engine starts.

IMPORTANT! Do not hold Key in starting position longer than 10 seconds at one time. If the engine does not start, wait at least 60 seconds before attempting to start again. Continuous cranking will burn out the Starter motor. If the engine develops sufficient speed to disengage the Starter, but fails to continue running, the engine must come to a complete stop before attempting to restart the engine. If the Starter is engaged while the Flywheel is still rotating, the Starter Pinion and Flywheel ring gear may clash, resulting in damage to the Starter. If the Starter does not turn the engine over, shut off the engine immediately and do not attempt to start the engine until the condition has been corrected. Do not "jump-start" using another, larger battery.

NOTE: Starter motors are pre-lubricated. Brushes normally require servicing only after extended use.

6. Gradually push the choke in to the OFF position after the engine is running.

7. Turn Steering Wheel to the left and right to check steering response.

8. Position the Throttle Lever at the desired engine RPM.

DRIVING VEHICLE

1. Release Parking Brake.

2. With the operator's foot positioned on the foot pedal as shown in (**Fig. 19** page 23), slowly apply pressure with the toe on top of the pedal away from the operator to move in a FORWARD direction. Position toe on the "tail" of the pedal to move in a REVERSE direction.

3. Slowly moving the Traction Pedal to the NEUTRAL or "centered" position will bring the vehicle to a stop. Be sure to allow the vehicle to stop before changing between forward and reverse motion.

4. Use the Throttle Lever to adjust the engine RPM if necessary.

OPERATING INSTRUCTIONS

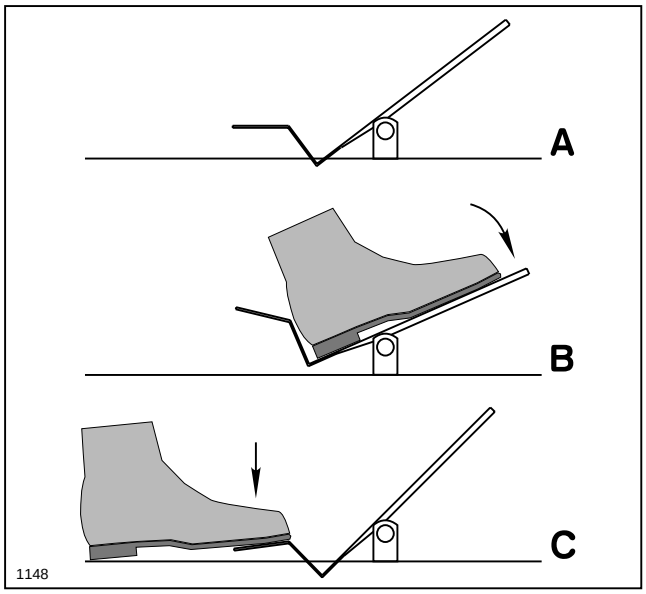

Figure 19

A. Neutral **B. Forward** **C. Reverse**

IMPORTANT! Do not attempt to push or tow the vehicle to get it started.

STOPPING VEHICLE

1. Slowly moving the Traction Pedal to NEUTRAL will stop the vehicle.

2. The BRAKE pedal may also be used to assist in stopping the vehicle in an emergency.

STOPPING ENGINE

1. Move Throttle Lever to "SLOW".

2. Depress Brake Pedal and lock in place by depressing the Brake Lock Pedal .

3. Rotate Ignition Key to "OFF".

4. Remove Ignition Key from Switch to prevent accidental starting.

SPEED CONTROL OPERATION

NOTE: The Speed Control can be engaged with the MULTI PRO® 5500 in operation and when the accessories are in use.

1. Flip the Toggle Switch to the ON position to enable the Speed Control.

2. Depress the Traction Pedal forward until the vehicle reaches the desired speed of operation.

3. Depress the SET button to lock ON the Speed Control.

4. To disengage the Speed Control, the brake must be depressed, or the Toggle Switch turned to the OFF position.

When the Speed Control is disengaged by use of the Brake Pedal, the operator must depress the SET button again to re-lock ON the Speed Control.

When the Speed Control is disengaged by use of the Toggle Switch, the operator must flip the Toggle Switch to the ON position and depress the SET button to lock ON the Speed Control.

⚠ CAUTION

Turning off the Toggle Switch while using speed control may bring the vehicle to an abrupt stop, possibly causing personal injury.

- **Always place foot on Traction Pedal before turning Toggle Switch off.**

NEW VEHICLE BREAK-IN

Your MULTI PRO® 5500 is ready for work. To provide the longest vehicle life, follow these guidelines for the first 100 operating hours.

1. Check the fluid and engine oil levels regularly and be alert for indications of overheating in any component of the vehicle.

2. After starting a cold engine, let it warm up for about 15 seconds before accelerating.

3. Vary vehicle speeds during operation. Avoid excessive idling. Avoid fast starts and quick stops.

4. A break-in oil for the engine is not required. Original engine oil is the same type specified for regular oil changes.

5. Refer to the Maintenance section of this Manual for any special low hour checks.

OPERATING INSTRUCTIONS

OPERATING CHARACTERISTICS

The vehicle is designed with safety in mind. It has four wheels for added stability. It is important to remember, however, that this vehicle is not a passenger car. It is a Turf Sprayer and is not designed for use on roadways.

The vehicle has special tires, a hydraulic traction pedal, and other features that give it extra gradeability. These features add to the versatility of the vehicle but, they can also get you into dangerous situations. You must keep in mind that the vehicle is not a recreation vehicle. It is not an all terrain vehicle. And, it is definitely not meant for "stunt driving" or "horsing around". It is a Turf Sprayer, not a play vehicle. Children should not be allowed to operate the vehicle, or ride as a passenger on the vehicle. Anyone who operates the vehicle should have a motor vehicle license.

If you are not experienced at driving the vehicle, practice driving in a safe area away from other people. Be sure you are familiar with all the vehicle controls, particularly those used for braking, steering, and shifting. Learn how your vehicle handles on different surfaces. Your operating skills will improve with experience, but as with operating any vehicle, take it easy as you begin. Be sure you know how to stop quickly in an emergency. If you need help ask your supervisor for assistance.

Many factors contribute to accidents. You have control over several of the most important. Your actions, such as driving too fast, turning too sharply, and combinations of these, are frequent causes of accidents.

One of the major causes of accidents is fatigue. Be sure to take occasional breaks. It is very important that you stay alert at all times.

Never operate the vehicle, or any equipment, if you are under the influence of alcohol or other drugs. Even prescription drugs and cold medicines can cause drowsiness. Read the label on the medicine or check with your doctor or pharmacist if you are unsure about a certain medication.

One of the most important rules to follow is to go slower in unfamiliar areas. It is surprising how much damage and injury common things can cause. Tree branches, fences, wires, other vehicles, tree stumps, ditches, sand traps, streams, and other things found in most parks and golf courses can be hazardous to the operator and passenger.

Avoid driving when it is dark, especially in unfamiliar areas. If you must drive when it's dark, be sure to drive cautiously, use the headlights.

PASSENGERS

The MULTI PRO® 5500 Turf Sprayer comes equipped with hip restraints and a passenger grab bar. Whenever you have a passenger riding on the vehicle, make sure he or she is holding on securely. Drive slower and turn less sharply because your passenger does not know what you are going to do next and may not be prepared for turning, stopping, accelerating, and bumps.

You should remain seated at all times, keeping arms and legs inside the vehicle. The operator should keep both hands on the steering wheel whenever possible.

There should never be passengers in the Cargo Bed or on any attachments. The vehicle is meant to carry a driver and one passenger only, and then only on the front seat.

SPEED

Speed is one of the most important variables leading to accidents. Driving too fast for the conditions can cause you to lose control and have an accident. Speed can also make a minor accident worse. Driving head-on into a tree at slow speed can cause injury and damage, but driving into a tree at high speed can destroy the vehicle and kill you and your passenger.

Never drive too fast for the conditions. If there is any doubt about how fast to drive, slow down.

TURNING

Turning is another important variable leading to accidents. Turning too sharply for the conditions can cause the vehicle to lose traction and skid, or even tip over.

Wet, sandy, and slippery surfaces make turning more difficult and risky. The faster you are going, the worse this situation becomes so, slow down before turning.

During a sharp turn at higher speeds, the inside rear wheel may lift off the ground. This is not a flaw in the design, it happens with most four wheel vehicles including passenger cars. If this happens, you are turning too sharply for the speed at which you are traveling. Slow down!

OPERATING INSTRUCTIONS

BRAKING

The MULTI PRO® 5500 Turf Sprayer has a hydrostatic braking system, which means that when the vehicle is not being propelled into motion it is stopped. The vehicle will not coast under normal operation.

It is good practice to slow down before approaching an obstacle. This gives you extra time to stop or turn away. Hitting an obstacle can damage the vehicle and its contents. More importantly, it can injure you.

Gross vehicle weight has a major impact on your ability to stop and/or turn. Heavier loads and heavier attachments make a vehicle harder to stop or turn. The heavier the load, the longer it takes to stop.

The braking characteristics also change with no bed or attachments on the vehicle. Fast stops may cause the rear wheels to lock up, which may affect the control of the vehicle. Its a good idea to decrease the vehicle speed with no bed or attachments.

Turf and pavement are much more slippery when wet. It can take 2 to 4 times as long to stop on wet surfaces as on dry surfaces.

NOTE: Heavy loads and turf conditions affect your vehicle's brake performance and ability to turn quickly without tipping over.

TIPOVERS

The best way to prevent accidents involving Turf Sprayer is through continuous supervision and training of operators and paying constant attention to the area in which the vehicle is being operated.

The best way for operators to prevent serious injury or death to themselves or others is to familiarize themselves with the proper operation of the Turf Sprayer, to stay alert and to avoid action or conditions which could result in an accident. In the event of a tip over, the risk of serious injury or even death will be reduced if the operator and all involved follow the instructions provided.

⚠ WARNING



Tipping or rolling the vehicle could cause serious personal injury or death.

- **If engine stalls or you lose momentum on a hill, never attempt to turn vehicle around.**
- **When backing down a hill always back straight down.**
- **Never drive across a steep hill, always drive straight up or down.**
- **Avoid turning on a hill.**

HILLS

Use extra care when on hills. Never go on hills that are extremely steep. Stopping while going down a hill will take longer than on level ground. Turning while going up or down a hill is more dangerous than turning on the level. Turning while going down hill, especially with the brakes on, and turning up hill while traversing a hill, are particularly dangerous. Even at a slow speed and without a load, tipovers are more likely if you turn on a hill.

Do not accelerate while climbing or descending a hill. If you have to turn while on a hill, do it as slowly and cautiously as possible. Never make sharp or fast turns on a hill.

If you stall or begin to lose headway while climbing a hill, quickly apply the brakes, engage emergency brake, and restart the engine.

OPERATING INSTRUCTIONS

TOWING VEHICLE

In an emergency the MULTI PRO® 5500 can be towed a short distance by actuating the dump valve in the variable displacement hydraulic pump, and towing the vehicle. However, TORO does not recommend this as a standard procedure.

IMPORTANT! Do not tow the vehicle faster than 2-3 mph (3-4.8 km/hr) because internal transmission damage may occur. The dump valve must be open whenever the vehicle is pushed or towed. If the vehicle must be moved a considerable distance, transport it on a truck or trailer.

Note: When the engine is not running, the power steering will not function, making it difficult (increased effort) to steer.

⚠ CAUTION

Towing at excessive speeds could cause vehicle to lose steering control.

- **Never tow vehicle faster than 3 MPH.**

DUMP VALVE (Fig. 20)

1. The Dump Valve is located on the left side of the variable displacement pump. Rotate the valve 90° in either direction to open. This will allow hydraulic fluid to by-pass internally. When fluid is by-passed, the vehicle can be moved - **slowly** - without damaging the transmission.

2. Close dump valve before starting the engine. However do not exceed 5-8 ft-lb (7-11 N m) torque to close the valve.

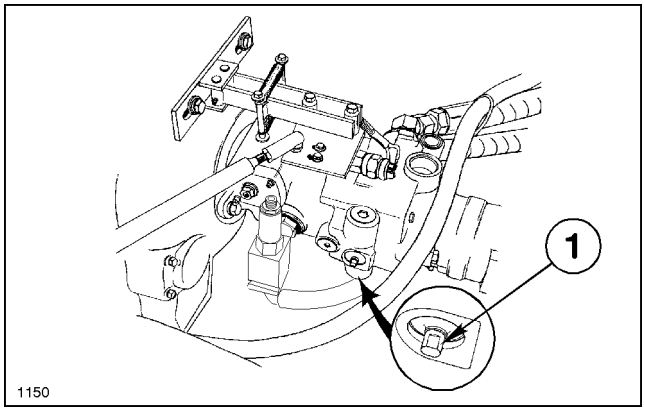

Figure 20

1. Dump Valve
(shown in normal position)

MAINTENANCE

⚠ WARNING

Servicing the vehicle while the engine is running or vehicle is not properly secured, could result in personal injury or death.

- **Before servicing or making adjustments to the vehicle, set parking brake, stop engine, and remove key from the switch.**

Establish a regular schedule of lubrication to insure trouble free performance.

For a vehicle operated under normal conditions, check and service at the intervals indicated in the chart on the following page. When operating in extremely cold, hot, or dusty conditions, check and service more frequently. For additional engine maintenance information, refer to the Engine Operator's Manual supplied with the vehicle.

DAILY MAINTENANCE SCHEDULE

Daily Maintenance: (duplicate this page for routine use)
Check proper section of Operator's Manual for fluid specifications.

Maintenance	**Daily Maintenance Check For Week Of_____**						
Check Item	MON	TUES	WED	THURS	FRI	SAT	SUN
✓Neutral Lockout Switch Operation							
✓Emergency/Park Brake Operation							
✓Engine Oil and Fuel Level							
✓Cooling System Fluid Level							
✓Dust Cup and Baffle (Air Filter)							
✓Radiator and Oil Cooler for Debris							
✓Unusual Operating Noises							
✓Unusual Engine Noises							
✓Hydraulic System Oil Level							
✓Hydraulic Hoses for Damage							
✓Fluid Leaks							
✓Tire Pressure							
✓Instrument Operation							
✓Sprayer Hose Clamp Connections							
Lubricate All Grease Fittings*							
Touch-up Damaged Paint							

***** Perform immediately after every washing regardless of the interval listed.

Notation for areas of concern: Inspection performed by_____

Item	Date	Information
1		
2		
3		
4		
5		
6		
7		
8		
9		
10		

Check proper section of Operator's Manual for fluid specifications.

MAINTENANCE SCHEDULE

Minimum Recommended Maintenance Intervals:

Maintenance Procedure	Maintenance Interval & Service

	Every 50 hrs.	Every 100 hrs.	Every 200 hrs.	Every 400 hrs.
Inspect Air Filter, Dust Cap, and Baffle				
Lubricate All Grease Fittings				
Check Battery Fluid Level				
Check Battery Cable Connections	"A" Level Service			
** Change Engine Oil and Filter				
Inspect Cooling System Hoses				
* Check Fan and Alternator Belt Tension				
Service Air Filter		"B" Level Service		
* Replace Hydraulic Filter				
Check Front Wheel Toe-In and Steering Linkage				
* Torque Wheel Lug Nuts				
Check Governor Oil Level				
Lubricate Throttle and Governor Linkage				
Solenoid Valve Maintenance			"C" Level Service	
Change Fuel Filters				
Inspect Fuel Lines and Connections				
Check Rear Planetary Gear Lube				
Change Hydraulic Oil				
* Change Hydraulic Oil Filter				
Flush Cooling System and Replace Coolant				
Drain and Clean Fuel Tank				
† Change Rear Planetary Gear Lube				
† Pack Front Wheel Bearings				"D" Level Service

* Initial break-in at 10 hours
** Initial break-in at 50 hours
† Initial break-in at 200 hours

Recommendations:
Items listed are recommended every 800 hours or 2 years, whichever occurs first.

Replace Safety Switches

JACKING VEHICLE

1. Do not start engine while vehicle is on jack, because engine vibration or wheel movement could cause vehicle to slip off jack.

2. Do not work under vehicle without jack stands supporting it. The vehicle could slip off the jack, injuring anyone beneath it.

3. The jacking points at the front of the vehicle are under the front axle directly beneath the leaf springs. (Fig. 21)

4. The rear jacking points are on the rearmost frame support, between the angle welds. (Fig. 22)

5. Always chock or block wheels opposite the side which is being jacked.

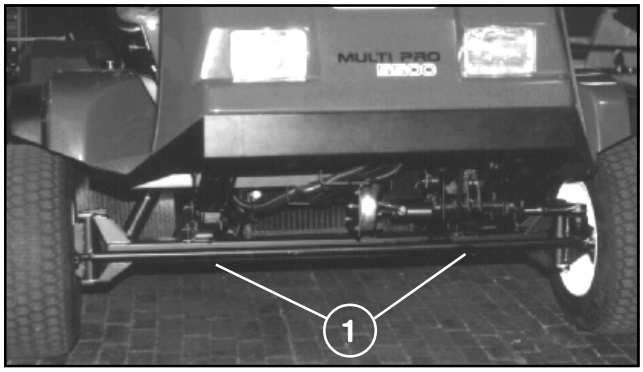

Figure 21

1. Front Jacking Points

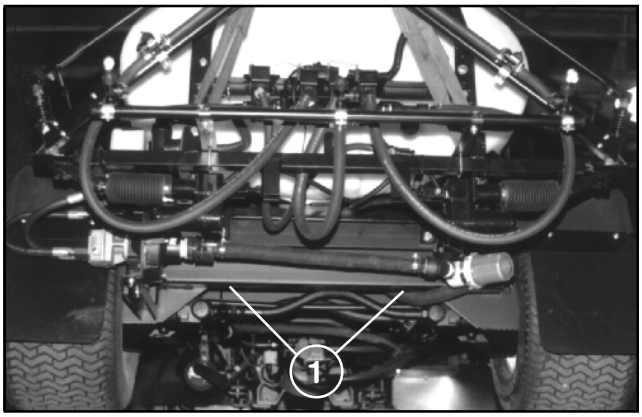

Figure 22

1. Rear Jacking Points

LUBRICATION

⚠ WARNING

Servicing the vehicle while the engine is running or vehicle is not properly secured, could result in personal injury or death.

- **Before servicing or making adjustments to the vehicle, set parking brake, stop engine, and remove key from the switch.**

The MULTI PRO® 5500 has 11 grease fittings that must be lubricated regularly with No. 2 General Purpose Lithium Base Grease. If the machine is operated under normal conditions, lubricate all bearings and bushings every 100 hours of operation. More frequent lubrication is required if used for heavy duty vehicle operations.

The grease fitting locations and quantities are: Tie rod ends (2), Power steering cylinder (2), Front spindles (2), Drive linkage arms (2), Boom hinges (2), Governor lever (1). (See Fig. 23-26)

1. Wipe grease fitting clean so foreign matter cannot be forced into the bearing or bushing.

2. Pump grease into the bearing or bushing.

3. Wipe off excess grease.

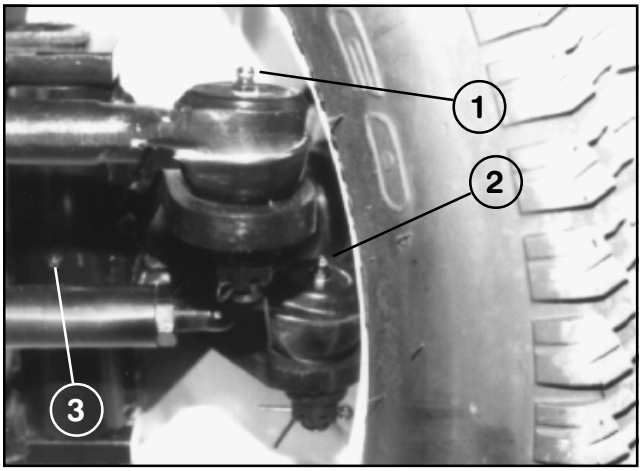

Figure 23

1. Steering Cylinder Fitting (one shown; one at other end of cylinder)

2. Tie Rod End Fitting (one on each side)

3. King Pin Fitting (one on each side)

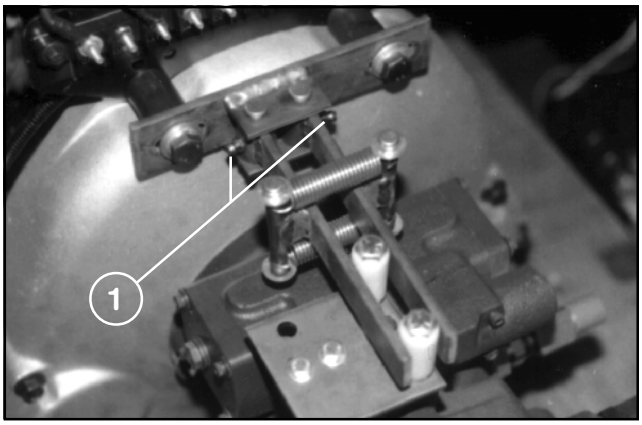

Figure 24

1. Neutral Centering Arm Fittings (one on each arm)

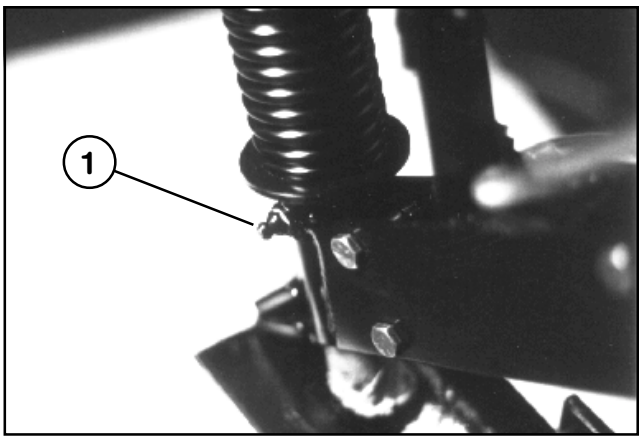

Figure 25

1. Boom Hinge Fitting (one on each side)

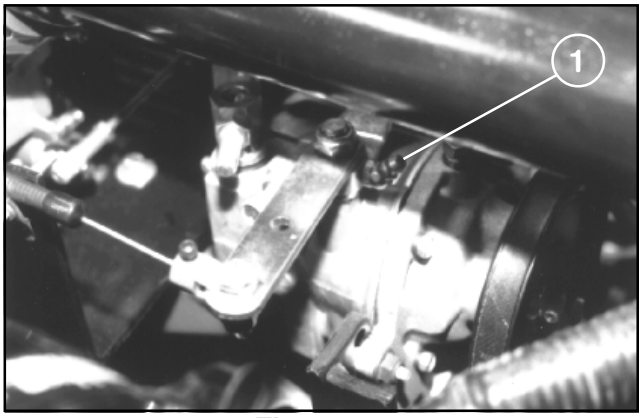

Figure 26

1. Governor Lever Fitting

AIR CLEANER MAINTENANCE

⚠ WARNING

Servicing the vehicle while the engine is running or vehicle is not properly secured, could result in personal injury or death.

- **Before servicing or making adjustments to the vehicle, set parking brake, stop engine, and remove key from the switch.**

GENERAL AIR CLEANER MAINTENANCE PRACTICES

Inspect the Air Cleaner and Hoses periodically to maintain maximum engine protection and to ensure maximum service life. Extensive damage can result from operating with a dirty Air Cleaner.

1. Check Air Cleaner Body for dents and other damage which could possibly cause an air leak. Replace a damaged Air Cleaner Body.

2. Squeeze the Vacuator Valve to eject dust and water.

3. Service the Air Cleaner Filter every 100 hours (more frequently in extremely dust conditions.)

4. Be sure Dust Cup is sealing around Air Cleaner Body.

SERVICING AIR CLEANER FILTER (Fig. 27)

1. Loosen the Strap that is securing Dust Cup to Air Cleaner Body. Remove the Dust Cup from body. Clean inside of Dust Cup.

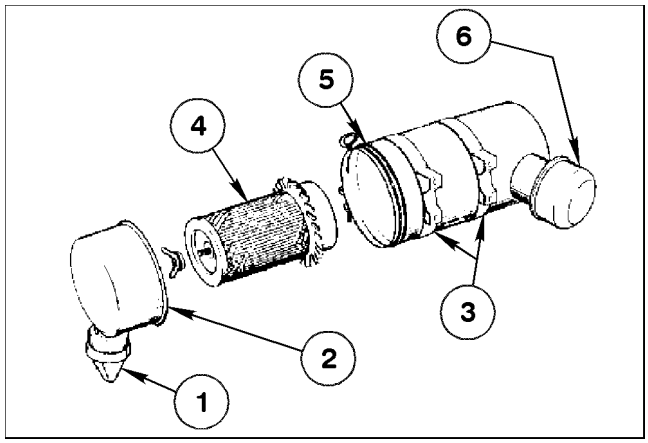

Figure 27

1. Vacuator valve	**4. Filter element**
2. Dust cup	**5. Air cleaner strap**
3. Mounting bands	**6. Inlet hood**

2. Remove Wing nut from the Air Filter guide bolt, and gently slide the Air Filter out of the Air Cleaner Body. Avoid knocking filter against Air Cleaner Body to reduce amount of dust dislodged.

3. Wipe inside of the Air Cleaner Body with a damp rag.

4. Inspect Air Filter, replace if damaged.

A. Place a bright light inside of filter.

B. Rotate filter slowly while checking for dirt, ruptures, holes, and tears.

C. Check fin assembly, gasket, and screen for damage.

5. Clean a reusable element by washing it, or blow out dirt by using compressed air. Do not reuse a damaged filter.

WASHING METHOD:

NOTE: Do not remove plastic fin assembly. Washing will remove dust from beneath fins.

A. Prepare a solution of filter cleaner and water and soak filter element approximately 15 minutes. Refer to directions on filter cleaner carton for complete information.

B. After soaking, rinse with clear water. Maximum water pressure must not exceed 40 psi to prevent damage to the filter element. Rinse filter from clean side to dirty side.

C. Dry filter using, warm flowing air (160°F max), or allow element to air dry. Do not use compressed air or light bulb to dry the filter element because damage could result.

COMPRESSED AIR METHOD:

NOTE: Do not remove plastic fin assembly. Back-blowing with compressed air removes dust from beneath fins.

A. Blow compressed air from inside to outside of filter element. Do not exceed 100 psi. (Wear eye protection)

B. Keep air hose nozzle at least 1 inch from pleated paper, and move nozzle up and down while rotating the filter. Inspect filter when dust and dirt are removed.

6. Inspect a replacement filter for any shipping damage. Install the new filter and secure the Wing nut, Dust Cup, and Air Cleaner Strap.

7. Check all ducting, hoses, and clamped connections for leaks.

ENGINE MAINTENANCE

⚠ WARNING

Servicing the vehicle while the engine is running or vehicle is not properly secured, could result in personal injury or death.

- **Before servicing or making adjustments to the vehicle, set parking brake, stop engine, and remove key from the switch.**

CHANGING ENGINE OIL AND FILTER (Fig. 28)

Change oil and filter after the first 50 hours of operation, thereafter change oil and filter every 100 hours.

⚠ WARNING

Continuous contact with used motor oil has caused skin cancer in laboratory mice.

- **Do not handle a hot oil filter with bare hands.**
- **Protect your skin by washing with soap and water.**

1. Remove drain plug and let oil flow into a drain pan. When oils stops, install drain plug.

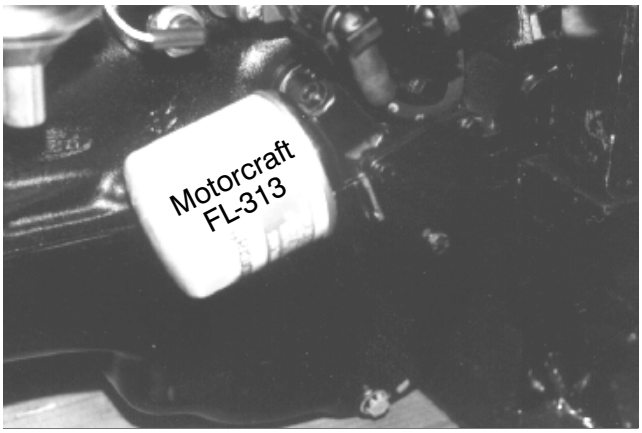

Figure 28

1. Engine Oil Drain Plug **2. Engine Oil Filter**

2. Remove oil filter. Apply light coat of clean oil to the seal of the new oil filter before screwing it on. Hand tighten until the gasket contacts the base, then tighten 1/2 to 2/3 turn. DO NOT OVERTIGHTEN.

3. Add recommended oil to crankcase. Capacity is 3.5 quarts (3.25 Liter) with filter.

ENGINE OIL

SINGLE VISCOSITY OILS	
Outside Temperature	
- 10°F to +60°F	SAE 10W
+10°F to +90°F	SAE 20W-20
Above +32°F	SAE 30
Above +50°F	SAE 40

MULTI-VISCOSITY OILS	
Outside Temperature	
Below +60°F	SAE 5W-30
- 10°F to +90°F	SAE 10W-20
Above -10°F	SAE 10W-40 or 10W50
Above +50°F	SAE 20W-40 or 20W50

OIL FILTER

This vehicle requires the use of a Motorcraft FL-313 Long-Life Oil Filter. This filter has an oil bypass valve in it.

IMPORTANT! ALL 5500 vehicles model no. 80001 and up MUST use the Motorcraft FL-313 oil filter or engine damage WILL occur.

GOVERNOR MAINTENANCE

For Governor maintenance refer to the instructions provided in the Ford Engine Maintenance and Operator's Manual. (Supplied with vehicle)

⚠ WARNING

Carelessly performing adjustments to a running engine could cause personal injury.

- **Engage parking brake and keep hands, feet, face, and other parts of the body away from fan and other moving parts.**

ENGINE MAINTENANCE

⚠ WARNING

Servicing the vehicle while the engine is running or vehicle is not properly secured, could result in personal injury or death.

- **Before servicing or making adjustments to the vehicle, set parking brake, stop engine, and remove key from the switch.**

IMPORTANT! Check fuel lines and connections every 400 hours. Inspect for deterioration, damage, or loose connections.

FUEL FILTERS (Fig. 29)

The MULTI PRO® 5500 is equipped with two fuel filters. One is an in-line type located between the fuel tank and fuel pump. The other is a threaded filter located between the fuel pump and carburetor. Replace filters every 400 hours of use.

In-line:

1. Remove the inlet and outlet hose clamps.

2. Disconnect the hoses and discard the filter.

3. Install new filter by connecting the hose from the fuel tank to the inlet side and the hose from the fuel pump to the outlet side.

4. Position the hose clamps and tighten.

Threaded:

1. Loosen and slide hose clamp down the fuel line. Remove the line from the filter.

2. Use 15/16" wrench to remove filter from elbow and discard old filter.

3. Thread new filter and tighten securely. DO NOT OVERTIGHTEN.

4. Install fuel line to new filter and secure with hose clamp.

Note: After replacing fuel filters start the engine and check for leaks.

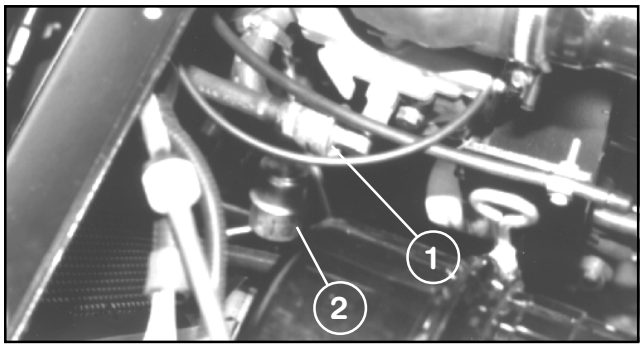

Figure 29

1. Inline filter **2. Threaded filter**

SPARK PLUGS (Fig. 30)

For specifications refer to the Ford Engine Maintenance and Operator's Manual. (Supplied with vehicle)

Replace spark plugs at recommended intervals. Maintenance of spark plugs is an important factor in assuring proper engine performance and reducing the exhaust emission level.

The MULTI PRO® 5500 uses Motorcraft-AGSF 22C or AGRF22 or equivalent Spark Plugs with air gap set as specified.

1. Remove wires from each Spark Plug by grasping, twisting, and then pulling the molded boot of the wire only. Do not pull directly on the wire because the wire connection inside the boot may become separated.

2. After loosening each Spark Plug one or two turns, clean the area around each Spark Plug port with compressed air, then remove Spark Plugs.

3. Check condition of side electrode, center electrode, and center electrode insulator. Replace spark plugs if damage is evident.

IMPORTANT! A CRACKED, FOULED, DIRTY, OR OTHERWISE MALFUNCTIONING SPARK PLUG MUST BE REPLACED. DO NOT ATTEMPT TO SAND BLAST, SCRAPE, OR CLEAN ELECTRODES WITH A WIRE BRUSH BECAUSE GRIT MAY EVENTUALLY RELEASE FROM THE PLUG AND CAUSE ENGINE DAMAGE.

4. Set gap between center and side electrodes as specified. Install correctly gapped Spark Plug and torque (tighten) plug as specified.

5. Connect Spark Plug wires securely.

NOTE: Do not overtighten plugs. The gap may change considerably due to the distortion of the plug outer shell.

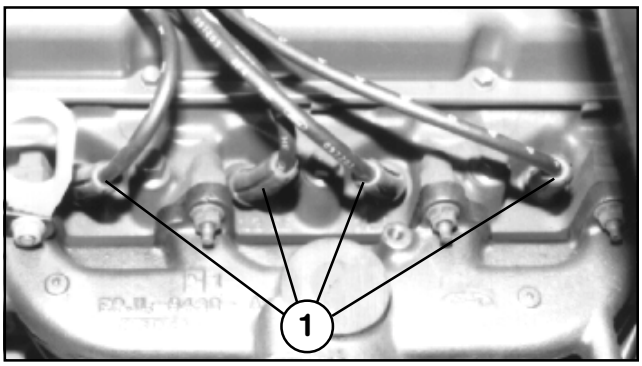

Figure 30

1. Spark Plugs

COOLING SYSTEM MAINTENANCE

⚠ CAUTION

Coolant in a hot radiator is under extreme pressure. Scalding hot coolant or steam can blow out of the radiator, causing serious injury.

- **Never remove the radiator cap, under any conditions, when the engine is running.**
- **Never remove the radiator cap when the engine or radiator are hot.**

IMPORTANT! NEVER SPRAY WATER ONTO A HOT ENGINE AS DAMAGE MAY OCCUR.

IMPORTANT! NEVER ADD COOLANT TO AN ENGINE THAT HAS BECOME OVERHEATED, UNTIL THE ENGINE HAS COOLED. ADDING COOLANT TO AN EXTREMELY HOT ENGINE CAN RESULT IN A CRACKED BLOCK OR CYLINDER HEAD.

Whenever coolant level checks are made check condition of the rubber seal on the Radiator Cap. Make sure the Radiator Filler Neck and Cap are clean and rinsed free of any dirt particles.

The cooling system has a total capacity of 12 quarts (11.5 liters). A 50/50 mix of anti- freeze and clean water is recommended.

Maintain the coolant level at approximately 3/4 to 1-1/2 inches below the Filler Neck seat on the Radiator when the coolant is cold.

Remove debris from engine area, oil cooler, and radiator daily, clean more frequently in dirty conditions.

CHANGING ENGINE COOLANT (Fig. 31)

⚠ CAUTION

If engine has been running, pressurized hot coolant can escape and cause burns if cap is removed.

- **Before removing cap, allow engine to cool for at least 15 minutes or until the cap is not hot to the touch.**

1. Park vehicle on level surface.

2. Remove radiator cap (ONLY IF IT IS COOL TO THE TOUCH!)

3. Open coolant drain cock at bottom of radiator and allow coolant to flow into drain pan. When coolant stops, close drain cock. (Fig. 31)

4. Slowly fill radiator with a 50/50 mixture of water and recommended coolant. Install the radiator cap securely.

5. Start engine and operate until warm. Recheck level and replenish, if required.

Use only a permanent-type coolant that meets Ford Specification ESE-M97B44-A. Refer to the coolant mixture chart on the container for additional antifreeze protection information. Do not use alcohol or methanol antifreeze.

Every 200 hours (more often in dusty areas) inspect the exterior of the radiator and oil cooler for obstructions. Remove all bugs, dirt, or foreign material with a soft brush or cloth. Use care to avoid damaging the fins. If available, use low pressure compressed air or a stream of water in the opposite direction of normal air flow.

Check all hoses and connections for leaks. If any of the hoses are cracked, frayed, or feel spongy, they should be replaced.

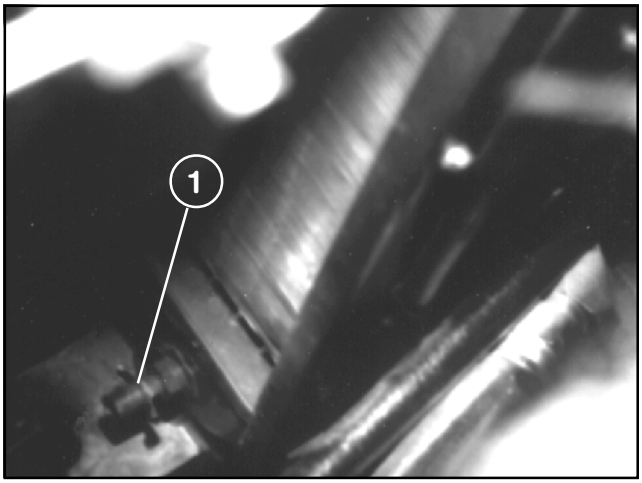

Figure 31

1. Radiator Drain Cock

BELT MAINTENANCE

DRIVE BELTS

The drive belts should be properly adjusted at all times. A loose drive belt causes improper alternator, fan and water pump operation, in addition to overheating. Overtightening the belt may result in excessive wear on the alternator and water pump bearings, as well as premature wear on the belt itself. Therefore, it is recommended that a belt tension gauge be used to check and adjust the belt tension. **Any belt that has operated for a minimum of 10 minutes is considered a used belt,** and when adjusted, it must be adjusted to the reset tension shown in the specifications below:

Belt Tension Specifications

Alternator	Tension
New	79-101 lbs.
Used-Reset Minimum	56-75 lbs.
Governor	
New	75 lbs.
Used-Reset Minimum	50 lbs.
A used belt is one that has been in operation for 10 minutes or more. Reset belt tension when it meets minimum specification.	

ADJUSTING BELTS

Check tension of all belts initially after the first day of operation and every 100 hours thereafter.

Alternator Belt (Fig. 32)

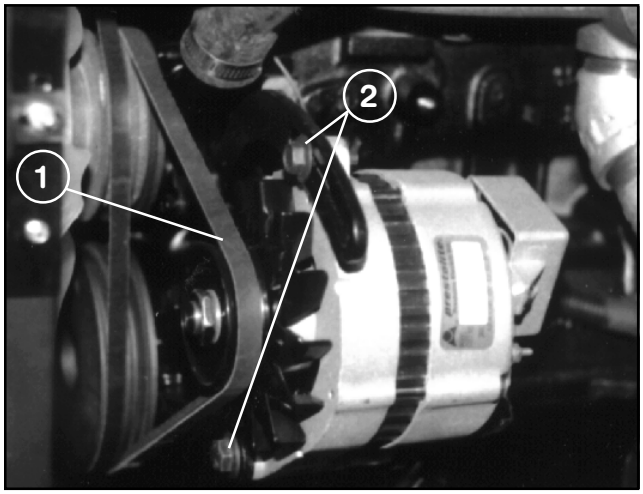

Figure 32

1. Alternator Belt **2. Mounting Bolts**

1. To adjust belt tension, loosen bolt securing alternator brace to engine, bolt securing alternator to brace and alternator mounting bolt.

2. Insert pry bar between alternator and engine and pry out on alternator.

3. Hold alternator in position after proper belt tension setting is achieved and tighten alternator and brace bolts to secure adjustment.

Governor/Cooling Fan Belt (Fig. 33)

1. To adjust belt tension, loosen upper and lower nuts securing idler arm to front engine mount.

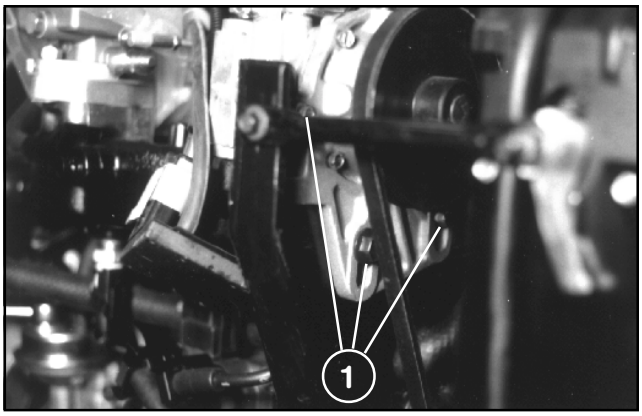

Figure 33

1. Governor/Fan Belt Mounting Bolts

2. Pull out on idler arm until desired belt tension is achieved.

3. Tighten mounting nuts to secure adjustment.

HYDRAULIC SYSTEM MAINTENANCE

CHANGING HYDRAULIC FLUID

Change hydraulic fluid after every 400 operating hours, in normal conditions. If fluid becomes contaminated, contact your local TORO distributor because the system must be flushed. Contaminated fluid looks milky or black when compared to clean oil.

1. Start engine, park machine on a level surface, set the parking brake, and shut engine off. Block the two rear wheels.

2. Clean area around hydraulic oil filter and remove filter.

3. Clean area around one hydraulic line on bottom of tank. Loosen and remove line from tank fitting and allow oil to flow into drain pan.

4. Install new filter; refer to steps 1-2 in "Replacing Hydraulic Oil Filter", for proper procedures.

5. Reinstall hydraulic line on tank fitting and tighten securely.

6. Fill reservoir with approximately 12 gallons of hydraulic fluid. Refer to "Checking Hydraulic Fluid". (page 18)

IMPORTANT! Use only hydraulic fluids specified. Other fluids could cause system damage.

7. Install reservoir cap. Start and run engine at idle speed for about two minutes and turn the steering wheel lock to purge air trapped in the system. Turn the engine off.

8. Check level of fluid and add enough to raise level to specified level. DO NOT OVERFILL.

REPLACING HYDRAULIC OIL FILTER

IMPORTANT! KEEPING THE HYDRAULIC SYSTEM CLEAN IS ESSENTIAL. SERVICING THE HYDRAULIC FILTER IS CRITICAL TO THE LIFE OF THE HYDRAULIC SYSTEM.

The hydraulic filter keeps the hydraulic system relatively free of contaminants and must be serviced at regular intervals. **Initially, change filter after first ten hours of engine operation, and thereafter every 200 hours of operation or yearly, whichever comes first.** Use TORO oil filter, Part No. 86-3010, as a replacement.

1. Position vehicle on a level surface, stop vehicle, engage parking brake (lock), turn engine off, and remove key from ignition switch.

2. Clean area around filter mounting area. Place drain pan under filter and remove filter.

3. Lubricate new filter gasket, and fill the filter with recommended hydraulic fluid.

4. Make sure filter mounting area is clean. Screw filter on until gasket contacts mounting plate. Then tighten filter 1/2 to 2/3 turn.

5. Start engine and let run for about two minutes to purge air from the system. Stop the engine, check the hydraulic oil level, and check for leaks.

CHECKING HYDRAULIC LINES AND HOSES

⚠ CAUTION

Pin hole leaks can eject high pressure hydraulic fluid. Hydraulic fluid escaping under pressure can penetrate skin and cause injury.

Fluid accidentally injected into the skin must be surgically removed within a few hours by a doctor familiar with this form of injury or gangrene may result.

- **Wear gloves and use cardboard or paper to find hydraulic leaks.**

Inspect hydraulic lines and hoses daily for leaks, kinked lines, loose mounting supports, wear, loose fittings, weather deterioration, and chemical deterioration. Make all necessary repairs before operating.

HYDRAULIC SYSTEM DIAGRAM

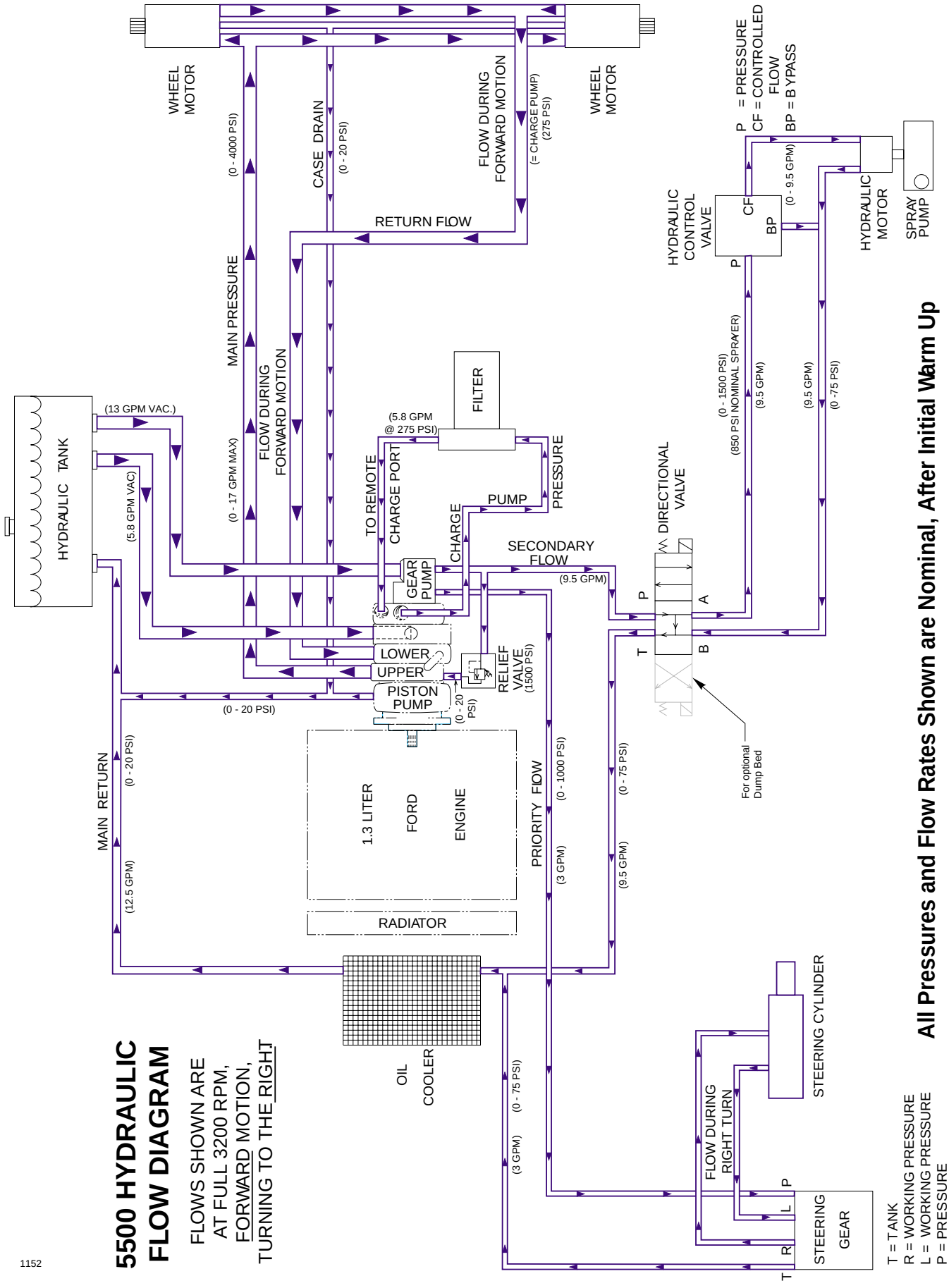

5500 HYDRAULIC FLOW DIAGRAM

FLOWS SHOWN ARE AT FULL 3200 RPM, FORWARD MOTION, TURNING TO THE RIGHT

All Pressures and Flow Rates Shown are Nominal, After Initial Warm Up

T = TANK
R = WORKING PRESSURE
L = WORKING PRESSURE
P = PRESSURE

1152

HYDRAULIC SYSTEM

TEST PORTS (Fig. 34,35)

The test ports are used to test pressure in the hydraulic circuits. Contact your local TORO Distributor for assistance.

1. Auxiliary Port is located on left side of piston pump and is used to measure the charge pressure of the transmission. (Fig. 34)

2. Loosen and remove the Relief Valve and Swivel Assembly from the Adapter Fitting in left side of Piston Pump. (Fig. 34)

3. Connect the Pressure Gauge at Adaptor to check case drain pressure. (Fig. 34)

4. System pressure Test Ports. (Fig. 35)

NOTE: When testing the system pressure check system at LOAD and NO LOAD conditions.

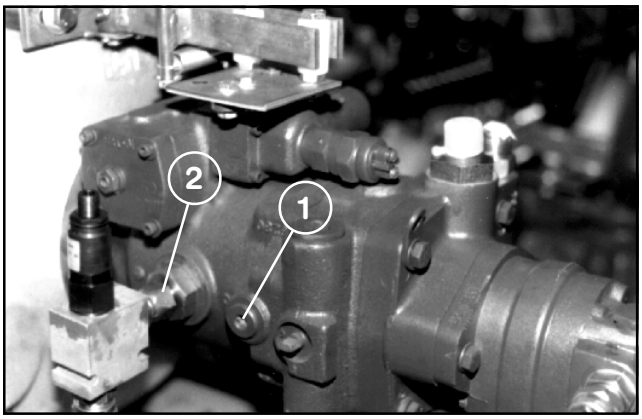

Figure 34

1. Auxiliary Test Port **2. Adaptor Fitting**

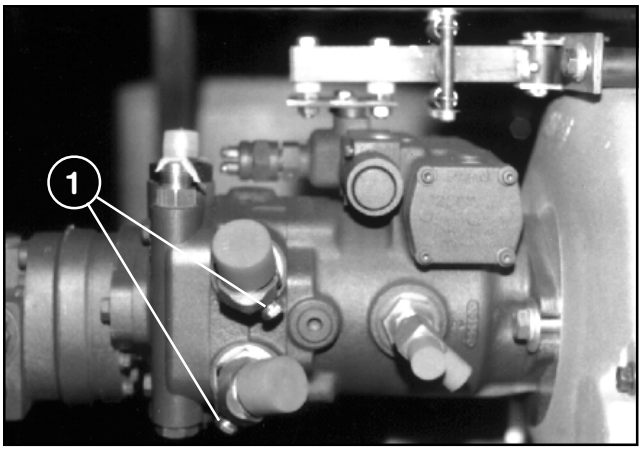

Figure 35

1. Test Ports

PRESSURE SETTINGS:

Operating Pressure	0 - 1500 psi
Case Pressure	1.7 bar (25 psi) max.
Charge Pressure	17.24 to 20.68 bar (250 to 300 psi)
System Pressure	344 bar (4000 psi) max. intermittent
	207 bar (3000 psi) continuous rated

The high pressure relief valves used in the MULTI PRO® 5500 are all factory preset at 4000 psi and cannot be readjusted.

GAUGES RECOMMENDED:

System Pressure Gauge	700 bar (5,000 psi)
Charge Pressure Gauge	0 - 50 bar (0 to 500 psi)
Case Pressure Gauge	0 - 25 bar (0 to 100 psi)

BRAKE MAINTENANCE

ADJUSTING EMERGENCY/PARK BRAKE (Fig. 36)

Adjust the service brakes when there is more than one inch of "free travel" of the brake pedal, or when the brakes do not work effectively. Free travel is the distance the brake pedal moves before braking resistance is felt.

To reduce free travel of brake pedal:

1. Loosen front nuts on threaded end of brake cables.

2. Tighten rear nuts to move cable backward until the pedal has 1/2 to 1 inch of free travel.

3. Tighten front nuts after brake is adjusted correctly.

NOTE: Both brake cables must be adjusted simultaneously so that the brake equalizer is straight after adjustment is made.

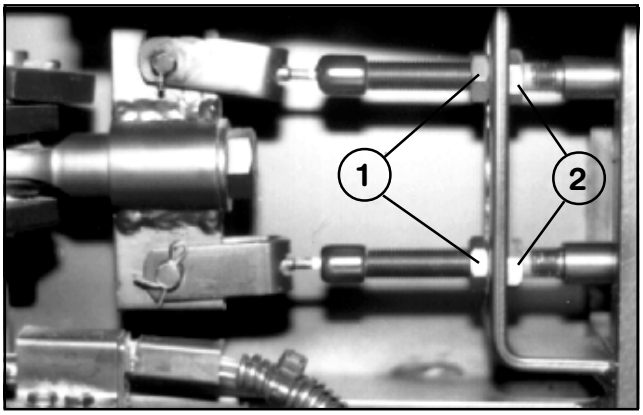

Figure 36

1. Front Nuts **2. Rear Nuts**

THROTTLE LEVER TENSION

ADJUSTING THROTTLE LEVER TENSION (Fig. 37)

If the Throttle Lever has a tendency to creep away from the "FAST" setting, the Throttle Pivot lock nut may need to be tightened:

1. Position vehicle on a level surface, stop vehicle, engage parking brake (lock), turn engine off, and remove key.

2. Remove the Throttle Lever knob and Console Cover.

3. Tighten Throttle Pivot lock nut.

4. Replace console cover and Throttle Lever knob. **NOTE:** Be sure to return the Throttle Lever to the "Slow" or starting position prior to starting engine.

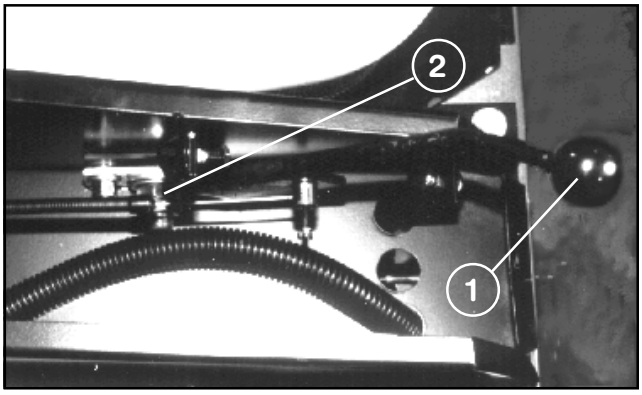

Figure 37

1. Throttle Handle **2. Pivot Lock Nut**

AXLE MAINTENANCE

CHANGING PLANETARY GEAR DRIVE OIL (Fig. 38,39)

Change oil initially after 200 hours operation and every 800 hours or yearly. Check oil level if external leakage is noted. (Refer to "Before Operating" page 19.) Use high quality SAE 85W-140 wt. gear lube replacement.

Capacity of each hub is 16 oz.

1. With machine on level surface, position wheel so the check/drain plugs are at the 3 and 6 o'clock positions. (Fig. 38 position 1.)

2. Remove both plugs. Allow oil to drain from the bottom hole into a pan.

3. Remove drain plug from bottom of hub on other side of wheel and allow oil to drain into pan. (Fig. 39)

4. When Gear Drive is completely drained, reinstall plug on bottom of hub and position wheel so holes are at 9 and 12 o'clock position. (Fig. 38 position 2.)

5. Add gear oil to the 12 o'clock positioned hole. Fill until the 9 o'clock hole begins to overflow.

6. Reinstall the Check/Drain plugs.

7. Repeat steps 1 thru 6 on opposite gear assembly.

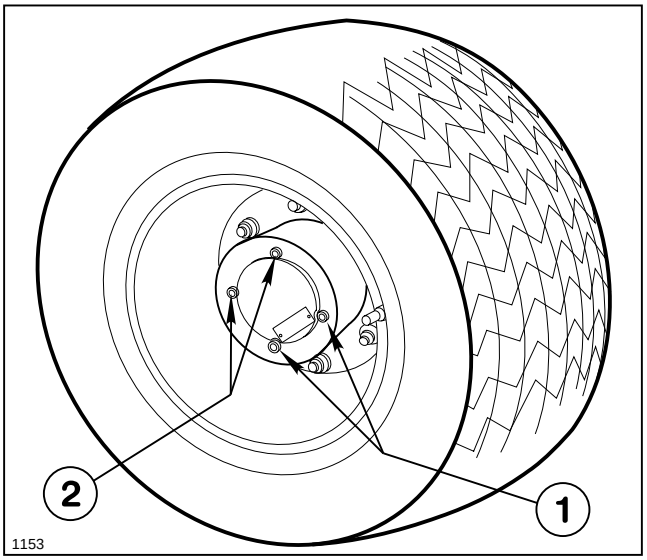

Figure 38

1. Position of Plugs for draining oil.

2. Position of Plugs for filling with oil.

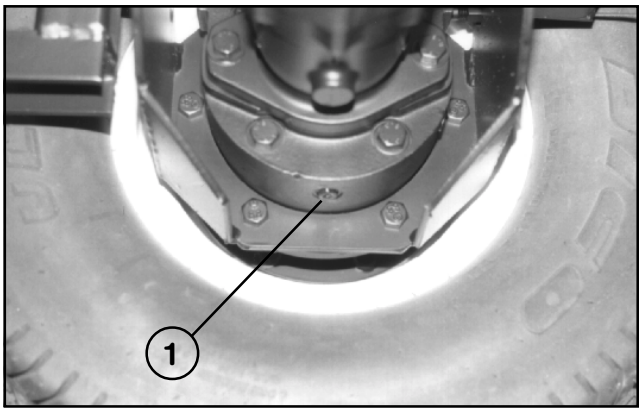

Figure 39

1. Check/Drain Plug

FRONT WHEEL TOE-IN (Fig. 40,41)

After every 600 operating hours or annually, check front wheel toe-in.

1. Measure center-to-center distance (at axle height) at front and rear of steering tires. Front measurement must be 1/8 to 1/4 inch less than rear measurement. (Fig. 40)

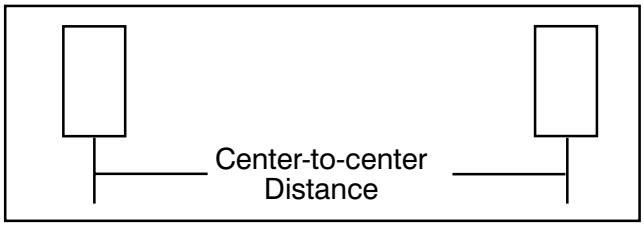

Figure 40

2. To adjust, loosen jam nuts at both ends of the tie rod. (Fig. 41)

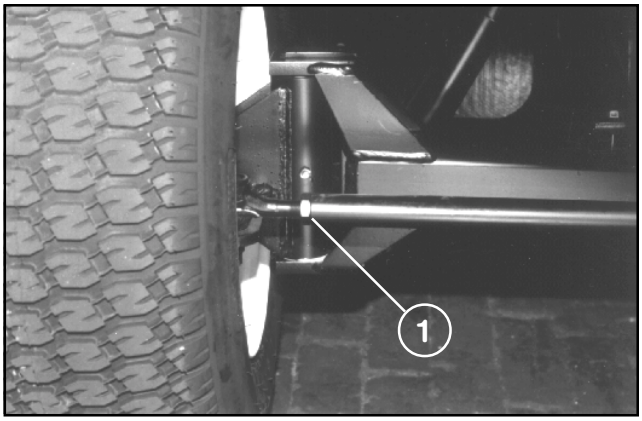

Figure 41

1. Tie Rod (one nut on each end)

3. Rotate tie rod to move front of tire inward or outward.

4. Tighten tie rod jam nuts when adjustment is correct.

ELECTRICAL MAINTENANCE

JUMP STARTING PROCEDURE

1. Connect a jumper cable between the positive (+) battery posts of the two batteries. The positive posts may be identified by a "+" sign on the top of the battery covers.

2. Connect one end of the other jumper cable to the negative (-) terminal of the battery in the other vehicle. The negative terminal has a "-" sign or NEG on the battery cover. DO NOT connect the other end of the jumper cable to the negative (-) post of the discharged MULTI PRO® 5500 battery. Connect it to the engine. DO NOT connect the jumper cable to the fuel system.

3. Start the engine of the vehicle providing the jump start. Let it run for a few minutes, then start the MULTI PRO® 5500 engine.

4. Remove the negative (-) jumper cable first from the MULTI PRO® 5500 engine, then from the battery in the other vehicle.

5. Finally, remove the remaining cable from both batteries.

⚠ WARNING

Jump starting can be dangerous. To avoid personal injury or damage to electrical components in vehicle, observe the following warnings:

- **Never jump start with a voltage source greater than 15 volts D.C. This will damage the electrical system.**
- **Never attempt to jump start a discharged battery that is frozen. It could rupture or explode during jump starting.**
- **Observe all battery warnings while jump starting your vehicle.**
- **Be sure your vehicle is not touching the jump start vehicle.**
- **Connecting cables to the wrong post could result in personal injury and/or damage to the electrical system.**

FUSES (Fig. 42)

There are two 30 amp fuses in the vehicle's electrical system. The fuse box is located under the left operators seat.

The 5 amp in-line fuse located under the dash panel on the left side, is for the speed control feature.

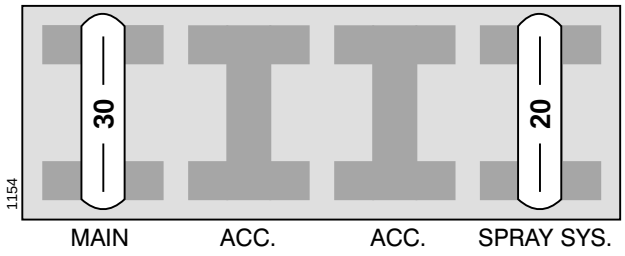

Figure 42

BATTERY CARE

1. Battery electrolyte level must be properly maintained and the top of the battery kept clean. If the vehicle is stored in a location where temperatures are extremely high, the battery will run down more rapidly than if the vehicle is stored in a location where temperatures are cool.

2. Keep top of battery clean by washing periodically with a brush dipped in ammonia or bicarbonate of soda solution. Flush the top surface with water after cleaning. Do not remove fill cap while cleaning.

3. Battery cables must be tight on terminals to provide good electrical contact.

4. If corrosion occurs at terminals. Remove battery cover, disconnect cables, negative (-) cables first and scrape clamps and terminals separately. Reconnect cables positive (+) cable first and coat terminals with petroleum jelly.

5. Check the electrolyte level every 50 operating hours, or if machine is in storage, every 30 days.

6. Maintain cell level with distilled or demineralized water. Do not fill cells above the bottom of the ring inside each cell.

⚠ CAUTION

Electrolyte gases are explosive and can cause serious injury to eyes, lungs and skin. Nausea may result if the gases are inhaled.

- **Wear safety goggles and rubber gloves when working with electrolyte or battery.**
- **Charge the Battery in a well ventilated place so gases produced while charging can dissipate.**
- **Unplug charger from electrical outlet before connecting to or disconnecting charger leads from battery posts.**
- **Since the gases are explosive, keep open flames and electrical spark away from the battery; DO NOT SMOKE!**

VEHICLE ELECTRICAL DIAGRAM

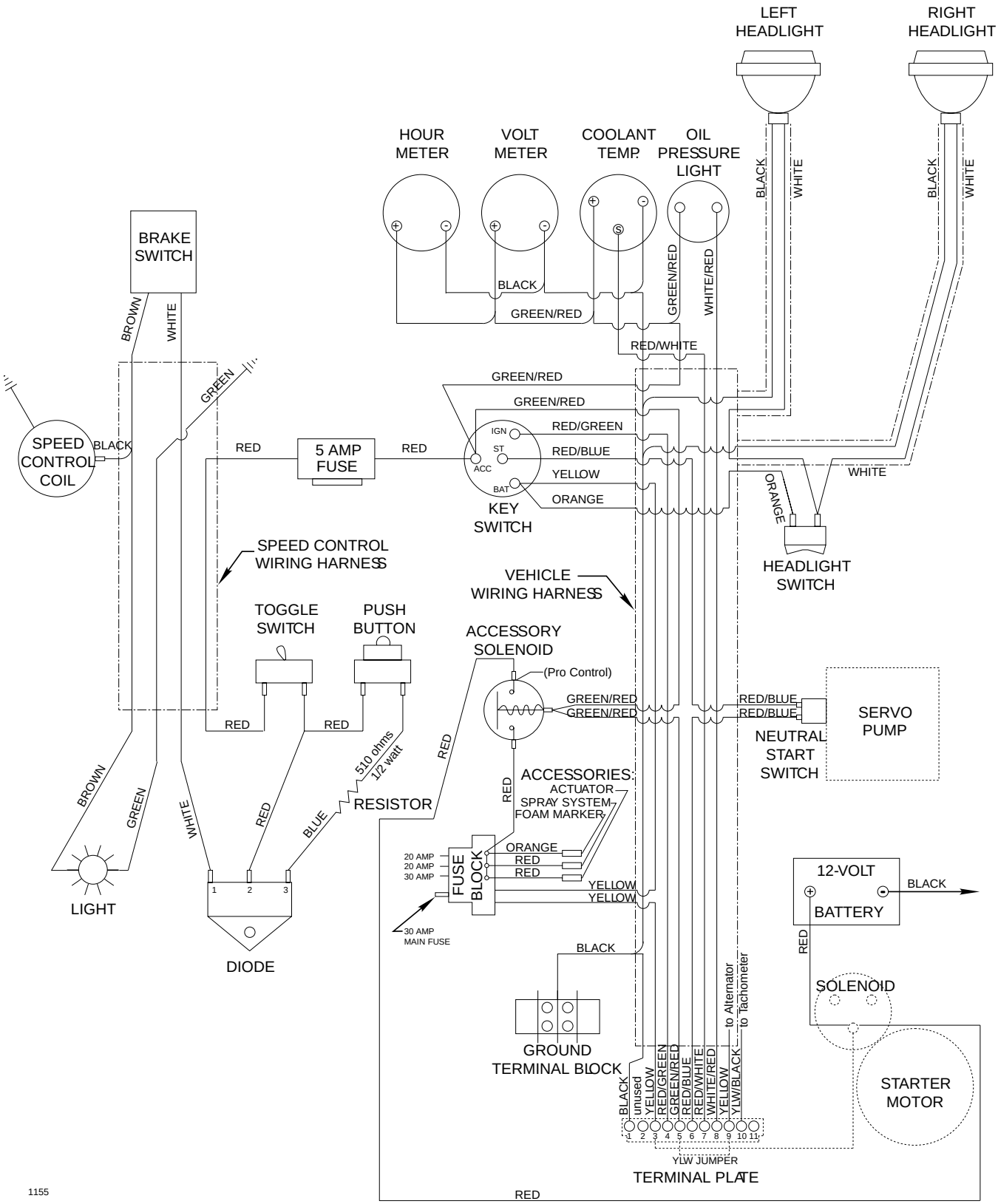

TRACTION DRIVE MAINTENANCE

LINKAGE MAINTENANCE (FIG. 43)

It is very important that the foot pedal operate freely and return positively to the NEUTRAL or CENTERED position. Periodic maintenance of the traction pedal requires applying grease to the grease fittings on the linkage control arms as shown in Fig. 43.

LINKAGE TROUBLESHOOTING (FIG. 43)

If the traction pedal fails to operate smoothly and freely, or fails to return to the NEUTRAL position, the following steps should be checked and corrections made if required:

1. Check that the traction pedal pivot tube is free on the pivot pin.

2. Check that the control linkage front and rear ball joints move freely.

3. Check that no cables, wiring harnesses, etc. are restricting or interfering with the linkage travel.

4. Check that the linkage centering arms are pivoting freely.

5. Check that both centering springs are in their proper position.

6. Check that the control plate is rotating freely.

7. Check that speed control clutch plate is operating freely.

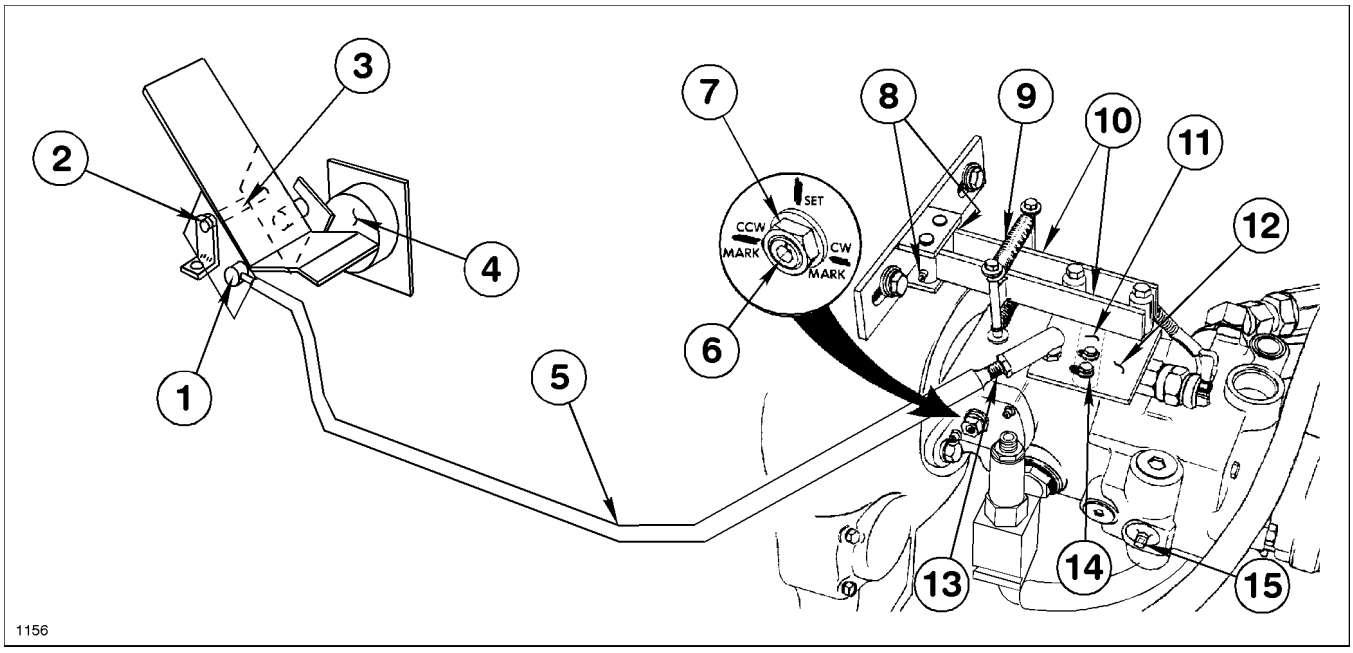

Figure 43

1. Ball Joint
2. Pivot Pin
3. Pivot Tube
4. Clutch Plate
5. Control Linkage
6. Servo Adj. Screw
7. Jam Nut
8. Grease Fittings
9. Centering Springs
10. Centering Arms
11. Servo Arm
12. Control Plate
13. Ball Joint
14. Control Plate Bolts
15. Dump Valve

TRACTION DRIVE MAINTENANCE

TRACTION PEDAL / TRANSMISSION NEUTRAL ADJUSTMENT (Fig.43)

The traction pedal and transmission adjustments are factory pre-set to assure the transmission is in the NEUTRAL or CENTERED position. If the MULTI PRO® 5500 Turf Sprayer should experience "creep" when the traction pedal is in the NEUTRAL or CENTERED position, **EMPTY THE TANK**, and adjust as follows:

1. Position vehicle on a level surface, stop engine, engage parking brake (lock), turn engine off, and remove key from ignition switch.

2. Raise rear wheels completely off the ground surface and support with jack stands. Chock the front wheels to prevent the vehicle from rolling forward or backward.

3. Remove the control linkage from the control plate at the rod end and pull away from the control plate.

4. Pull both control arms away from the control plate bearings (Fig. 43). When the control plate is adjusted correctly, the control plate WILL NOT rotate when the control arms are pulled away.

5. If control plate IS NOT adjusted correctly, proceed to STEP 7.

6. If control plate IS adjusted correctly, proceed to STEP 8.

7. To adjust the control plate, loosen the two control plate mounting bolts, so it allows the control plate to center itself and allows the servo control arm to move independently as shown in Fig. 43 Retighten the two control plate mount bolts and verify the proper adjustment by pulling both control arms away from the control plate bearings. The control plate SHOULD NOT ROTATE! After proper adjustment proceed to STEP 10.

8. Make a chalk mark on the servo adjusting screw to use as a reference point.

9. Loosen the jam nut on the servo adjusting screw. Release the brake pedal, start the engine, and turn the servo adjusting screw counter clockwise until the rear wheels begin to move. Make a chalk line on the servo housing next to the servo screw mark to show this location. Rotate the servo adjusting screw clockwise until the rear wheels begin to rotate in the opposite direction. Make a chalk mark on the servo housing next to the servo screw mark to show this location. Turn the servo adjusting screw to midway between these two marks and retighten the jam nut.

10. Reattach the control linkage to the control plate.

TESTING THE ADJUSTMENT

1. Lower the vehicle from the jack stand.

2. Start the engine and release the Parking/ Emergency Brake Pedal.

3. Verify the proper adjustment. The vehicle SHOULD NOT experience any "creep".

If "creep" is still present, recheck the control plate adjustment and the servo adjustment.

SPRAYING SYSTEM:

The MULTI PRO® 5500 Turf Sprayer is primarily a dedicated spray application vehicle with optional material hauling and spreading capabilities. Equipped with a flow-regulating hydraulic Control Valve, the Spray System pressure is adjusted as the Spray Pump speed is increased or decreased. The system includes manual controls located on the operator's Center Console, a remote Boom Control Switch located on the operator's-side floorboard, and Boom Indicator Lights on the dash. The Spray System itself consists of a 300 gallon tank, hydraulic flow regulator, spray pump, and three Boom sections for even application of material. This unit is specially designed to improve the accuracy and uniformity of spray applications.

1. Learn how to operate the Sprayer and how to use the controls properly. DO NOT let anyone operate this equipment without first receiving thorough instructions.

2. Keep all shields, safety devices, and decals in place. If a shield, safety device or decal is malfunctioning, illegible or damaged, repair or replace it before operating the machine.

3. Chemicals can injure persons, animals, plants, soils or other property. To eliminate environmental damage and personal injury:

A. Select the proper chemical for the job.

B. Carefully read the directions printed on the chemical manufacturer's labels before handling chemicals. Instructions on chemical manufacturer's container labels, regarding mixing proportions, should be read and strictly followed.

C. Keep spray material from skin. If spray material comes in contact with body, wash it off immediately with clean water and detergent.

D. Always wear goggles and other protective equipment as recommended by the Chemical Manufacturer.

E. Properly dispose of chemical container and unused chemicals.

MAINTENANCE:

4. Before servicing or making any adjustments to the Sprayer:

A. Stop the vehicle and set the parking brake.

B. Shut off the vehicle's engine and remove the key from ignition.

C. Disengage all power and wait until all moving parts have stopped.

5. Keep all nuts, bolts, and other fasteners tightened securely. Replace any shields removed during servicing or adjustments.

6. To be sure of optimum performance and safety, always purchase genuine TORO replacement parts. Accessories made by other manufacturer's could be dangerous. Altering this equipment in any other manner may affect the machine's operation, performance, and durability, or its use may result in injury or death. Such use could void the product warranty of The Toro Company.

CONTROLS AND OPERATION:

CONSOLE (Fig. 44)

1. SPRAY PUMP CONTROL SWITCH: Move to "ON" position to engage the Spray Pump. Move to "OFF" position to disengage Spray Pump.

2. JET AGITATOR SWITCH: Activates or stops the agitation of spray solution in the Tank.

3. PRESSURE ADJUST SWITCH: Hold to INCREASE or DECREASE spraying pressure to desired level.

4. MASTER ON/OFF SWITCH: Activates all three Boom Valves to control the flow of spray solution to the Boom Sections.

5. INDIVIDUAL BOOM ON/OFF SWITCHES: Allows individual selection of Boom sections and controls the flow of spray solution to left, center, and right Booms.

REMOTE MASTER ON/OFF SWITCH (ON FLOORBOARD): Is in series with the Master Boom ON/OFF switch; The operator must first turn on the Master Boom ON/OFF switch on the center console; then click on the Remote Boom ON/OFF Switch on the floor board.

BOOM INDICATOR LIGHTS (ON DASH): When lit, indicate which Boom Section(s) is on. See Page 21.

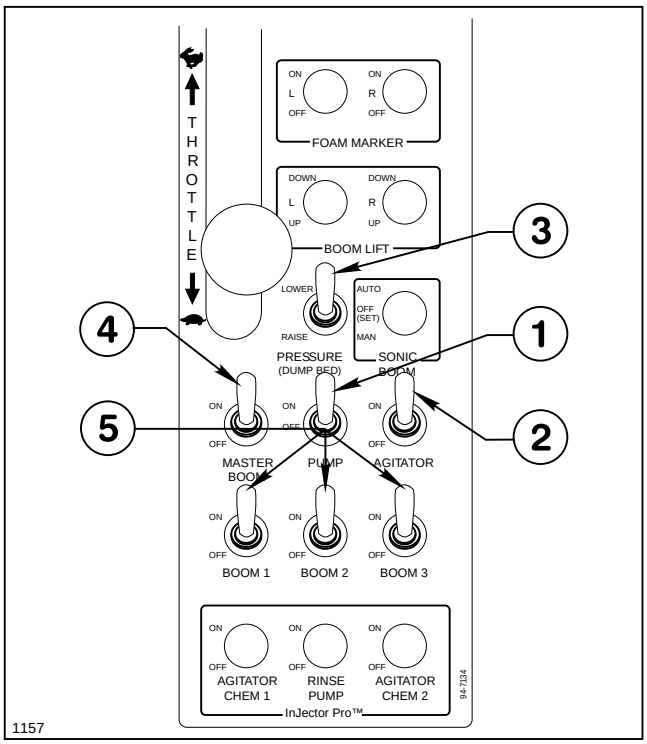

Figure 44

BEFORE SPRAYING

NOZZLE SELECTION GPA/GAL/1000 FT²

See the nozzle chart below to be sure that your spray nozzles have the capacity necessary to achieve the application rate selected.

To select the proper nozzle, you need to know:

1. Recommended chemical application rate in gallons per acre or gallons per 1000 sq. ft.

2. Average Vehicle speed in Miles per hour.

3. Nozzle spacing (20 inches or 50 centimeters).

With this information you can calculate the volume per minute per nozzle, using the formulas to the right. Then select the proper nozzle from the chart below.

EXAMPLE (**GPA** FORMULA)
Application Rate = 75 Gallons/Acre
Vehicle Speed = 4 M.P.H.
Nozzle Spacing = 20 inches

$$\frac{75 \text{ G.P.A.} \times 4 \text{ M.P.H.} \times 20}{5940} = 1.00 \text{ G.P.M. (per nozzle)}$$

With 1.00 G.P.M. and a pressure of 40 P.S.I. you would select Nozzle No. 40444.

EXAMPLE (**GAL/1000 FT²** FORMULA):
Application Rate = 1.70 Gal./1000 sq. ft.
Vehicle Speed = 4 M.P.H.
Nozzle Spacing = 20 inches

$$\frac{1.70 \text{ GAL/1000 FT}^2 \times 4 \text{ M.P.H.} \times 20}{137} = 1.00 \text{ G.P.M. (per nozzle)}$$

NOZZLE SELECTION CHART

GPA AND GAL/1000 FT² FORMULAS

TORO Part No.	Nozzle Number / Color-Code	Pressure (PSIG)	Capacity 1-Nozzle (GPM)	APPLICATION RATES FOR NOZZLES 20" SPACING — GALLONS PER ACRE				GALLONS PER 1000 SQ. FT.			
				3 MPH	4 MPH	5 MPH	6 MPH	3 MPH	4 MPH	5 MPH	6 MPH
93-6428	RA-2	20	0.14	14	10.5	8.4	7	0.32	0.29	0.19	0.16
	120°	30	0.17	17.2	12.9	10.3	8.6	0.39	0.30	0.24	0.20
	¼"	40	0.20	19.8	14.9	11.9	9.9	0.45	0.39	0.27	0.23
	Yellow	50	0.22	22.2	16.6	13.3	11.1	0.51	0.38	0.31	0.25
92-3977	RA-4	20	.28	28	21	17	14	0.64	0.48	0.39	0.32
	120°	30	.35	34	26	20	17	0.78	0.60	0.46	0.39
	¼"	40	.40	40	30	24	20	0.92	0.69	0.55	0.46
	Red	50	.45	44	33	27	22	1.01	0.76	0.62	0.51
43082	RA-5	20	.36	35	26	21	17.5	0.80	0.60	0.48	0.40
	120°	30	.44	42	32	26	21	0.96	0.73	0.60	0.48
	¼"	40	.50	50	37	30	25	1.15	0.85	0.69	0.57
	Brown	50	.56	56	42	33	28	1.29	0.96	0.76	0.64
41088	RA-6	20	.43	42	32	25	21	0.96	0.73	0.57	0.48
	120°	30	.52	52	39	31	26	1.19	0.90	0.71	0.60
	¼"	40	.60	60	45	36	30	1.38	1.03	0.83	0.69
	Gray	50	.67	66	50	40	33	1.52	1.15	0.92	0.76
42828	RA-8	20	.57	56	42	34	28	1.29	0.96	0.78	0.64
	120°	30	.70	68	51	41	34	1.56	1.17	0.94	0.78
	¼"	40	.80	80	59	48	40	1.84	1.35	1.10	0.92
	White	50	.90	88	66	53	44	2.02	1.52	1.22	1.01
40444	RA-10	20	.71	70	53	42	35	1.61	1.22	0.96	0.80
	120°	30	.87	86	64	51	43	1.97	1.47	1.17	0.99
	¼"	40	1.0	100	74	59	50	2.30	1.70	1.35	1.15
	Tan	50	1.1	110	83	66	55	2.53	1.91	1.52	1.26
92-0027	RA-15	20	1.1	106	79	63	53	2.43	1.81	1.45	1.22
	120°	30	1.3	128	96	77	64	2.94	2.20	1.77	1.47
	¼"	40	1.5	148	111	89	74	3.40	2.55	2.04	1.70
	Lt. Blue	50	1.7	166	125	100	83	3.81	2.87	2.30	1.91
93-0903	RA-25	20	1.8	178	134	104	88	4.09	3.08	2.39	2.02
	140°	30	2.2	218	163	128	108	5.01	3.75	2.94	2.48
	3/4"	40	2.5	248	186	148	124	5.70	4.28	3.40	2.85
	Black	50	2.8	277	208	168	140	6.37	4.78	3.86	3.22

BEFORE SPRAYING
NOZZLE SELECTION LIT/HA

See the nozzle chart below to be sure that your spray nozzles have the capacity necessary to achieve the application rate selected.

To select the proper nozzle, you need to know:

1. Recommended chemical application rate in gallons per acre, gallons per 1000 sq. ft. or liters per hectare.

2. Average Vehicle speed in Miles per hour or kilometers per hour.

3. Nozzle spacing (20 inches or 50 centimeters).

With this information you can calculate the volume per minute per nozzle, using the formulas to the right.

L/HA (METRIC) FORMULA:

$$\text{L/min (Per Nozzle)} = \frac{\text{L/ha x km/h x 50 cm}}{60{,}000}$$

Use G.P.M. (L/min) and Pressure to select appropriate nozzle from chart below .

EXAMPLE (**L/HA** FORMULA):
Application Rate = 907 L/hectare
Vehicle Speed = 5 km/h
Nozzle Spacing = 50 cm

$$\frac{907 \text{ L/ha x } 5 \text{ km/h x } 50}{60{,}000} = 3.78 \text{ lit/min. (per nozzle)}$$

With 3.78 L/min and a pressure at 275 kPa you would select nozzle No. 40444.

NOZZLE SELECTION CHART
L/HA FORMULA

TORO Part No.	Nozzle Number Color-Code	Pressure (kPa)	Capacity 1-Nozzle (L/min)	APPLICATION RATES FOR NOZZLES 50 cm SPACING LITERS PER HECTARE			
				5 km/h	6 km/h	8 km/h	10 km/h
93-6428	RA-2	150	0.53	131	98	76	65
	120°	200	0.64	161	121	96	80
	¼"	275	0.76	185	139	111	93
	Yellow	350	0.83	208	155	124	104
92-3977	RA-4	150	0.56	134	112	84	67
	120°	200	0.64	155	129	97	77
	¼"	275	0.76	181	151	113	91
	Red	350	0.85	205	171	128	102
43082	RA-5	150	1.4	335	279	209	167
	120°	200	1.61	387	322	242	193
	¼"	275	1.89	453	378	283	227
	Brown	350	2.13	512	426	320	256
41088	RA-6	150	1.67	402	335	251	201
	120°	200	1.93	464	387	290	232
	¼"	275	2.27	544	453	340	272
	Gray	350	2.56	614	512	384	307
42828	RA-8	150	2.23	536	447	335	268
	120°	200	2.58	619	516	387	309
	¼"	275	3.02	726	605	453	363
	White	350	3.41	819	682	512	409
40444	RA-10	150	2.79	670	558	419	335
	120°	200	3.22	773	645	483	387
	¼"	275	3.78	907	756	567	453
	Tan	350	4.26	1023	853	640	512
92-0027	RA-15	150	4.18	1008	840	630	504
	120°	200	4.84	1176	980	735	588
	¼"	275	5.67	1368	1140	855	684
	Lt. Blue	350	6.40	1536	1280	960	768
93-0903	RA-25	150	6.98	1675	1396	1047	836
	140°	200	8.06	1934	1612	1208	968
	3/4"	275	9.45	2268	1888	1418	1132
	Black	350	10.66	2558	2132	1598	1280

SYMBOL DEFINITIONS AND CONVERSIONS:

SYMBOL DEFINITIONS:

GPM	- Gallons per minute
L/min	- Liters per minute
dl/min	- Deciliter per minute
PSI	- Pounds per square inch
kPa	- Kilopascal
GPA	- Gallons per acre
L/ha	- Liter per hectare
ml/ha	- Milliliter per hectare
GAL/1000 FT^2	- Gallons per 1,000 sq. ft.
mm	- Millimeters
cm	- Centimeters
dm	- Decimeters
m	- Meter
MPH	- Miles per hour
km	- Kilometers
km/h	- Kilometers per hour
US	- Volume per ACRE
SI	- Volume per HECTARE
TU	- Volume per 1,000 sq. ft.

LIQUID CONVERSIONS

U.S. Gallons x 128 = Fluid Ounces
U.S. Gallons x 3.785 = Liters
U.S. Gallons x 0.83267 = Imperial Gallons
U.S. Gallons x 8.34 = Pounds (Water)

AREA

1 Acre = 43,560 sq. feet
1 square meter = 10.764 sq. feet
1 hectare (ha) = 2.471 acres; 10,000 sq.meters

LENGTH

1 millimeter (mm) = 0.039 inch
1 centimeter (cm) = 0.393 inch
1 meter (m) = 3.281 feet
1 kilometer (km) = 0.621 mile
1 inch = 25.4 millimeters; 2.54 centimeters
1 mile = 1.609 kilometers

PRESSURE

1 psi = 6.89 kPa

Formulas:

$$\text{Speed (mph)} = \frac{\text{Distance (ft.) x 60}}{\text{Time (seconds) x 88}}$$

$$\text{GPM per nozzle} = \frac{\text{GPA x mph x w*}}{5{,}940}$$

$$\text{GPM per nozzle} = \frac{\text{Gal/1000ft}^2 \text{ x mph x w*}}{136}$$

$$\text{GPA} = \frac{\text{5,940 x GPM (per nozzle)}}{\text{mph x w*}}$$

$$\text{Gal/1000ft.} = \frac{\text{136 x GPM (per nozzle)}}{\text{mph x w*}}$$

* w= Nozzle spacing in inches.

BEFORE SPRAYING

FILL FRESH WATER WASH TANK (Fig. 45)

In case of chemical contact with skin or eyes, refer to the Chemical Manufacturer's label for instructions on seeking medical attention. A fresh water wash tank has been installed on the right side of the vehicle.

NOTE: Fill Fresh Water Wash Tank with clean water only. Check to assure tank is full before each operation.

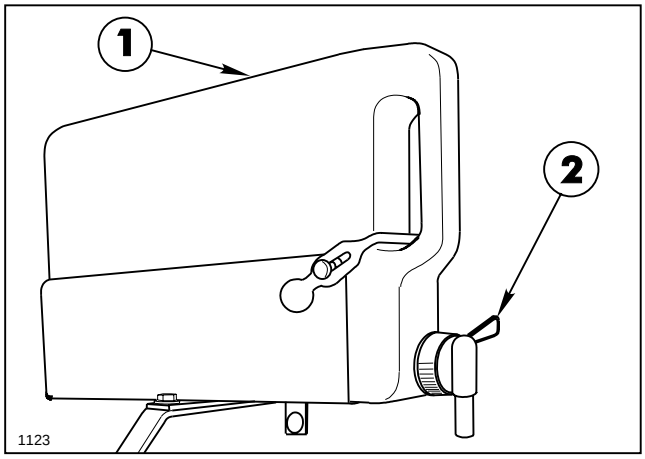

Figure 45

1. Fresh Water Tank **2. Spigot**

1. Turn Tank Spigot to "ON" position.

2. Hold contaminated area directly under water stream. Flush thoroughly.

3. Turn Tank Spigot to "OFF" position.

BEFORE SPRAYING

System Set-up:

IMPORTANT: INSPECT AND CLEAN ALL SYSTEM COMPONENTS BEFORE SPRAYING, INCLUDING THE TANK, STRAINER, PUMP, SOLENOIDS, AND NOZZLES IN YOUR INSPECTION.

1. Attach Supply Hose to Anti-siphon device and fill the Tank half full with clean, clear water. Open the Suction Line Valve.

2. Start engine. Refer to "Starting Engine" section on page 22. Move the Throttle Lever to 7/8 to full throttle to simulate desired spraying speed.

3. Turn the Spray Pump Control Switch to the "ON" position.

4. Turn the Jet Agitator Switch to the "ON" position.

5. Switch "ON" the Master Boom Switch and all three individual Boom Switches.

6. Using the Pressure Adjust Switch, set the Pressure Gauge to the desired operating pressure.

7. Confirm boom operation by switching Boom Sections "ON" and "OFF".

8. Turn Master ON/OFF Switch to the "OFF" position.

9. Refer to Filling The Solution Tank.

FILLING THE SOLUTION TANK:

⚠ CAUTION

CHEMICALS ARE HAZARDOUS AND CAN CAUSE PERSONAL INJURY!

- **Carefully read the directions printed on the chemical manufacturer's labels before handling chemicals. Instructions on chemical manufacturer's container labels, regarding mixing proportions, should be read and strictly followed.**
- **Keep spray material from skin. If spray material comes in contact with body, wash it off immediately with clean water and detergent.**
- **Always wear goggles and other protective equipment as recommended by the Chemical Manufacturer.**

IMPORTANT: Follow the chemical manufacturer's instructions for mixing spray solution to obtain desired application rate. Do not add chemical to Tank until just before use. The concentrate should not be poured into an empty Tank: Fill tank about one-half full with clean, clear water. With agitation ON, add chemical concentrate and finish filling Tank with water.

1. Refer to "Operation" section.

OPERATION

USING THE SPRAYER:

1. With Spray Pump switch "ON" and Master Boom switch "OFF"; drive the vehicle to the area to be sprayed.

2. With spray system at desired operating pressure to achieve the application rate of the chemical selected (see step 6 in "System Set-Up" above), proceed as follows:

3. Position Throttle Control at 7/8 to full engine speed to provide for necessary ground speed, pressure, and volume.

4. Switch the Master ON/OFF Switch to "ON" and use the Master ON/OFF, Remote Master, or Individual Boom Switches to control the Boom Sections.

WHILE OPERATING THE SPRAYER:

- Do not overlap areas that have been sprayed previously.
- Watch for plugged Nozzles. Replace all worn Nozzles or those producing streaks or uneven patterns
- Stop the spray flow before stopping the vehicle.

OPERATION

AFTER SPRAYING:

It is extremely important to carefully wash and clean the Tank after **every** use. Not only the Tank, but the Pump, Hoses, Nozzles, Screens, Filters, and the exterior of the Sprayer also should be cleaned.

Flush Pump After Use
One of the most common causes for faulty pump performance is "gumming" or corrosion inside the pump. Flush the Pump and entire system with a Tank cleaning agent. Mix according to the manufacturer's directions. This will dissolve most residue remaining in the pump, leaving the inside of the pump clean for the next use.

A **minimum** of three 50 gallon rinses usually is required for all components of the Sprayer. The addition of a detergent cleaner may be advisable in the initial washing. Directions for such and addition, if required, are included on the chemical container.

Cleaning of the Sprayer should be accomplished in an area where there is no potential for the chemicals to be washed off in surface water or to enter subsurface drainage system.

When Sprayer is not to be used for an extended period, refer to the **STORAGE** section of this Manual for the detailed instructions to prevent damage to the components.

PREVENTIVE MAINTENANCE

Preventive maintenance is most important to assure long life of the Spray System. The following maintenance procedures should be followed on a regular basis:

Flush the entire spraying system after each use. Failure to clean the system can result in a chemical residue which can plug the Hoses and/or Nozzle Tips, Solenoids, and seriously damage the Centrifugal Pump.

Wash spray nozzles thoroughly with water. Using compressed air, blow out orifice, clean and dry. If orifice remains clogged, clean it with a soft bristled brush. Never use a metal object.

Check all of the nozzles frequently to spot any inconsistencies in the spray pattern. Worn nozzle orifices which allow a greater volume of spray material to flow through the nozzle can cause an expensive loss in chemical and/or turf damage.

SUCTION STRAINER: Turn off Suction Line Valve if Tank is full of spray solution. Remove the strainer bowl and clean the strainer screen daily when spraying wettable powders - after every 50 hours when using liquid chemical.

IMPORTANT: Do not operate the Pump dry! Be certain Suction Line Valve is opened when spraying is resumed. Damage to Spray Pump can result when operating the Sprayer with Valve closed.

PUMP MAINTENANCE

Pump Housing Disassembly

1. Using a 9/16" box end wrench, remove the four hex-head bolts holding the pump to the mounting flange. (If necessary, tap pump casing discharge port with rubber mallet or hammer to separate.)

2. To remove the impeller nut, insert a large screwdriver or file (at least 10" long) into impeller vanes to prevent impeller from turning when loosening nut. Use a 5/8" socket wrench to remove the impeller nut by turning it counterclockwise. See Fig.46.

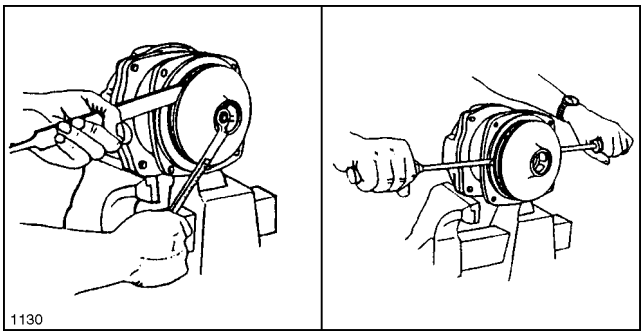

Figure 46

3. Once nut is removed, place a screwdriver on each side (as in Fig. 46) behind the impeller and pry away from the mounting flange. Remove woodruff key from the shaft. Remove O-ring from the mounting flange.

Pump Seal Removal

1. Lightly lubricate shaft with mineral oil or glycerin for easier removal of seal.

NOTE: In the case of a severe pump seal leak, check the shaft ball bearing in the hydraulic motor for possible contamination.

2. Using a 1/2" box end wrench, remove the four bolts holding the motor to the mounting flange. Remove motor.

3. Using a screwdriver and hammer, tap out the stationary portion of the mechanical seal from the motor side of the mounting flange. (If motor is not removed, seal can be pried out with a small screwdriver. **CAUTION:** The seal will be damaged by removal in this manner. A new seal **must** be used when Pump is reassembled.)

NOTE: This step is NOT required if servicing only the hydraulic motor.

Clean-Up Of Pump Housing

1. Using a bottle-type wire brush with air of hand drill, clean the discharge port, suction port and the sealing areas of the O-ring on the Pump Casing and mounting flange. Using the port brush, clean the seal cavity in the mounting flange.

2. After wire brush cleaning, it is recommended that the Pump Casing and mounting flange be further cleaned in a solvent tank to remove rest and corrosion particles.

Seal Replacement/Pump Housing Reassembly

1. Lubricate seal cavity in mounting flange with mineral oil or glycerin.

2. Install the stationary portion of the mechanical seal by sliding over the shaft with the ceramic side out.

IMPORTANT: Make sure both seal cavity and seal are clean and lubricated.

3. To seat the seal in the seal cavity, use a piece of 3/4" PVC pipe 4" to 6" in length.

4. To install the rotary portion of the mechanical seal, place it over the shaft with the carbon side facing in, and press until it bottoms out against the stationary portion. See Fig. 47.

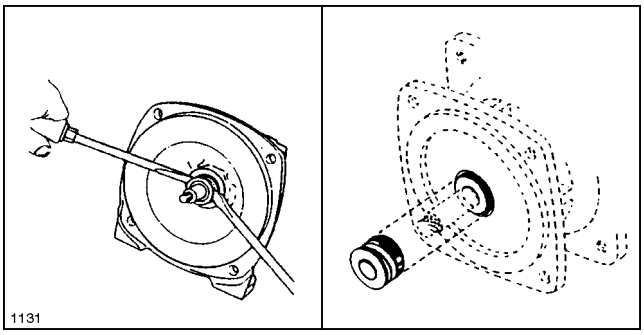

Figure 47

5. Install rubber gasket over shaft against rotary portion of seal.

6. Insert woodruff key into shaft key slot. Place impeller on shaft. Put impeller nut on shaft end and, using a large screwdriver or file in the impeller vanes for support, tighten impeller nut securely.

7. Install O-ring on mounting flange. Replace O-ring if worn or damaged.

8. Place Pump casing on mounting flange, insert and tighten bolts.

MAINTENANCE

TROUBLESHOOTING THE 95-9237 SOLENOID VALVE

CONDITION	POSSIBLE CAUSES	HOW TO CHECK
1. Valve won't open	**A.** No electrical power to valve	Manually activate valve. If stem moves freely, check and clean electrical connections. Inspect electrical system.
	B. Stem movement restricted	Manually activate stem by pushing on lower diaphragm piston. If more than 5 lbs. of force is required to move stem, disassemble valve, inspect and clean all parts.
2. Valve won't shut off	**A.** Spring malfunction	Manually activate stem. Stem should offer 2-6 lbs. resistance, but movement should be quick and smooth. If there is very little resistance, disassemble and check spring.
	B. Stem movement restricted	Manually activate stem by pushing on lower diaphragm piston. If more than 5 lbs. of force is required to move stem, disassemble valve, inspect and clean all parts. Replace any damaged or worn parts with new ones.
	C. Seat washer blown out of retainer due to excessive pressure	Remove stem from valve body and inspect condition of seat washer.
	D. Seat washer worn or damaged	Replace seat washer.
3. Leakage around coil or around lower diaphragm piston.	**A.** Ruptured diaphragms	Disassemble valve and replace diaphragms with new ones.
4. Blowing fuses	**A.** Short circuit in power	Inspect wires for worn insulation and check connections.
	B. Short within the coil	Remove connections from coil and activate switch, making sure connections don't touch. If fuse doesn't blow, replace coil.
5. Valve operating properly, but pressure drop too high.	**A.** Not getting full stroke	Energize coil. Check length of stroke - should be approximately 1/8". If not, remove coil and check for obstructions between armature and armature stop. Clean all parts and reassemble.
	B. Obstruction in valve body	Remove inlet and outlet connections and inspect body.

MAINTENANCE

SOLENOID VALVE:

IMPORTANT: Before performing any maintenance, make sure electrical power to the coil is shut off and line pressure is relieved.

- Keep all electrical connections and coil clean at all times.
- A protective coating may be applied to the completed electrical connections if desired.
- Do not apply lubricating oils or other petroleum products to the valves, as this may cause swelling of the rubber parts. Also, check with the chemical manufacturer to be sure chemicals being used are compatible with the valve components.

See parts drawing below for reference numbers in parentheses( ).

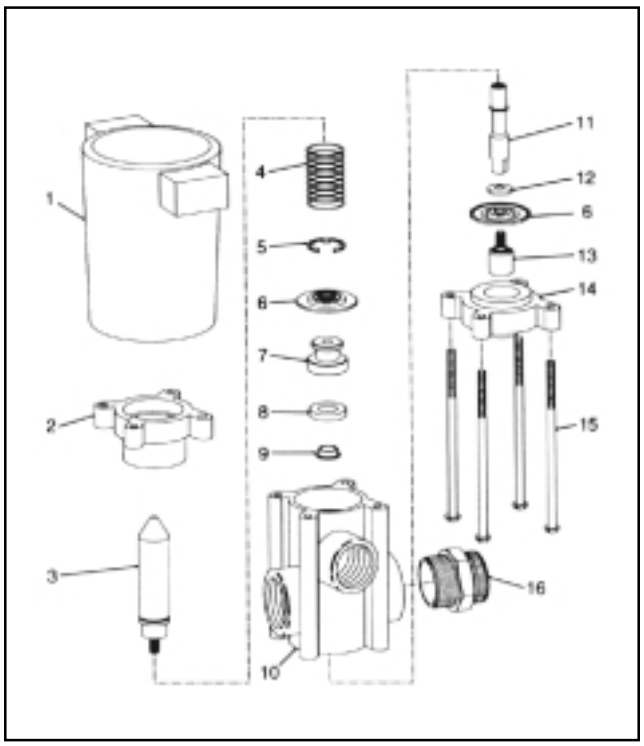

TO REPLACE COIL ONLY:

1. Shut off power to coil.

2. Disconnect wires from terminals.

3. Loosen four screws (15) that secure body to coil assembly.

4. Lift off coil (1) and replace with new coil.

5. Thread four screws (15) into new coil assembly (1) and uniformly tighten to secure body.

TO REPLACE DIAPHRAGMS AND SEAT WASHER:

1. Remove the four screws (15) that secure the lower diaphragm housing and separate coil assembly (1). Remove the lower diaphragm housing (14).

2. Remove spring (4) from armature (3).

3. Secure hole in armature (3) with 1/4" diameter rod or an allen wrench. Unscrew entire assembly with screwdriver secured in slot of lower diaphragm piston (13).

NOTE: Stem/Seat/Diaphragm/upper diaphragm housing assembly may unscrew at lower diaphragm piston (13) or at armature (3).

4. If lower diaphragm piston (13) unscrews, remove diaphragm (6) and washer (12) and inspect or replace as necessary. Remaining seat/upper assembly may be removed from top of polypropylene body (12) and disassembled by securing flats on stem (11) and unscrewing armature (3). Seat washer retainer (7) will then slide from the stem (11). Separate the upper diaphragm housing (2) and upper diaphragm from the seat washer retainer (7).

5. If armature (3) unscrews, remove the upper diaphragm housing (2) and the diaphragm (6). The seat washer retainer (7) slides off the stem (11) which allows the spacer (9) and seat washer (8) to be removed. The lower diaphragm piston (13) can be disassembled from the stem (11) by securing the stem with a wrench and unscrewing the lower diaphragm piston (13).

TO REASSEMBLE:

1. Reassemble seat washer retainer (7), seat washer (8) and spacer (9) onto stem (11).

2. Reassemble upper diaphragm (6) (*with "Fluid Side" marking facing valve body*), the upper diaphragm housing (2) and armature (3) onto stem end (11) and tighten securely against the seat washer retainer (7).

3. Insert the entire subassembly into valve body (10) from top. Screw lower diaphragm piston (13) with diaphragm (6) and washer (12) in proper order into bottom end of stem assembly. Tighten snugly with screwdriver.

4. Reinstall spring (4) over armature (3). Place coil assembly (1) on top of upper diaphragm housing (2).

SOLENOID VALVE (Cont'd)

5. Position valve body subassembly and coil subassembly together.

6. Replace lower diaphragm housing (14). Secure coil assembly (1), body subassembly and lower diaphragm housing (14) using four screws (15). Care must be exercised to uniformly tighten the retaining screws (15).

7. Replace electrical connections. There is no positive or negative terminal.

FLOW DIAGRAM

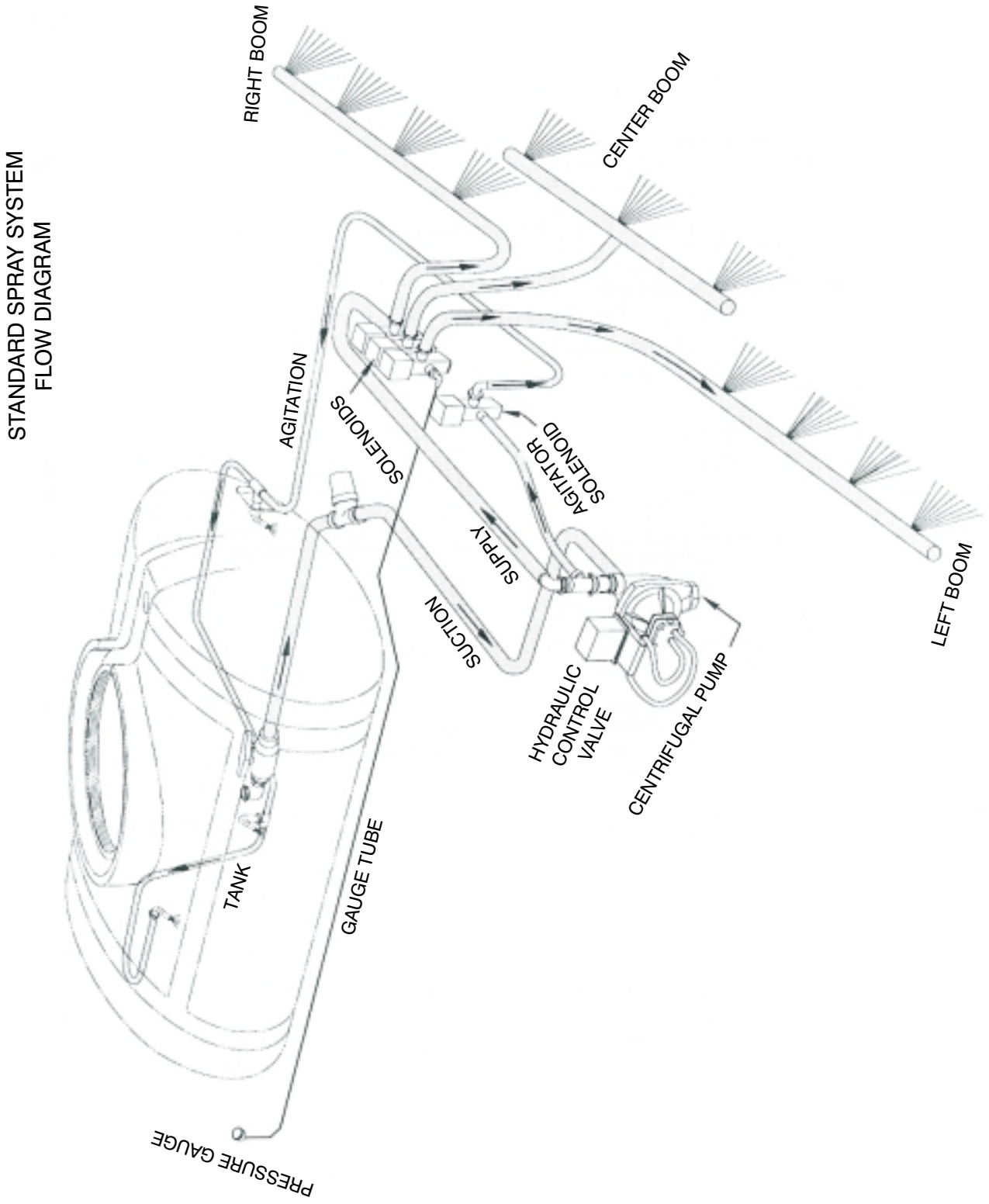

SPRAY SYSTEM ELECTRICAL DIAGRAM

MULTI PRO 5500 SERIAL NUMBER 60230 AND UP

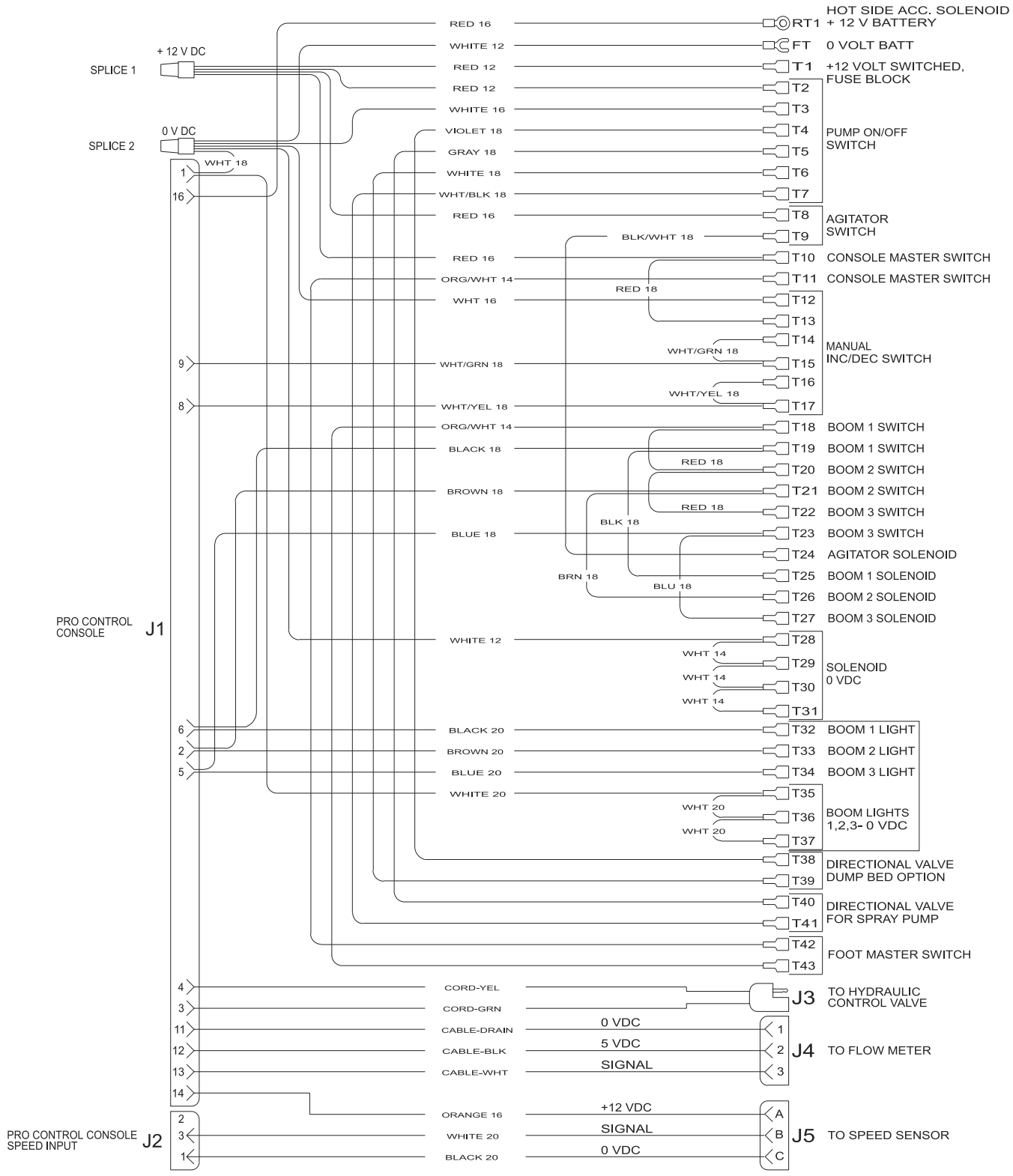

STORAGE

Check the machine thoroughly for any replacement parts required. In the event parts are needed, place your order with your TORO distributor in the fall or winter to avoid the delays caused by the usual spring rush. When ordering parts please specify the MODEL NUMBER and the SERIAL NUMBER of the MULTI PRO® 5500 Turf Sprayer.

TRACTION UNIT:

1. Thoroughly clean the traction unit and engine.

2. Check the tire pressure. Inflate all tires to 18-20 psi.

3. Check all fasteners for looseness; tighten as necessary.

4. Grease or oil all grease fittings and pivot points. Wipe up any excess lubricant.

5. Lightly sand and use touch up paint on painted areas that are scratched, chipped or rusted.

6. Service the battery and cables as follows:

A. Remove the battery terminals from the battery posts.

B. Clean the battery, terminals, and posts with a wire brush and baking soda solution.

C. Coat the cable terminals and battery posts with Grafo 112x skin-over grease (TORO Part No. 505-47) or petroleum jelly to prevent corrosion.

D. Slowly recharge the battery every 60 days for 24 hours to prevent lead sulfurizing of the battery.

ENGINE:

1. Drain the crankcase completely, and refill with recommended engine oil (S.A.E. 10) or equivalent.

2. Run engine until completely out of gasoline, then restart and run on unleaded gasoline mixed with stabilizer for at least 10 minutes.

3. While the engine is still running and at completion of above run, treat upper cylinders by spraying one to two ounces of recommended engine oil into carburetor air intake for about 10 to 15 seconds. Open throttle for short bursts of speed, shut off ignition and allow engine to come to a stop while continuing to spray recommended engine oil into the air intake.

4. Check coolant protection.

5. Disconnect and remove battery.

6. Clean exterior surface of engine.

7. Leave spark plugs in holes or seal spark plug holes with suitable threaded metal plugs.

8. Seal all openings in engine and accessories with weatherproof tape. Mask off all areas used for electrical contact.

9. Make sure all surfaces are dry, including ignition wiring, and all exterior surfaces of engine.

10. Thoroughly clean and service the air cleaner assembly.

11. Seal the air cleaner inlet, the exhaust outlet, and the crankcase breather with weatherproof tape.

12. Check the oil filter cap, gas cap, and radiator cap to ensure they are all securely in place.

SPRAYING SYSTEM:

1. Flush pump and entire spraying system with water and tank cleaning agent. Drain pump and spray system completely.

2. Add a rust inhibiting antifreeze solution to the pump and recirculate through the system, coating the pump interior. Drain solution completely.

3. Remove coil assemblies from solenoid valves. Apply a light film of petroleum jelly or equivalent to the armatures. Reinstall coil assemblies on solenoid valves.

4. Check condition of spray hoses. Tighten all hose connections securely.

5. Lubricate boom pivot grease fittings and pivot points.

⚠ CAUTION

If the vehicle is stored in proximity to flames or sparks. Explosive fumes may accumulate and ignite. Causing injury or death.

- **Never store a vehicle with gasoline in the tank.**
- **Never store a vehicle where fumes may reach an open flame or spark.**
- **Allow engine to cool before storing in any enclosure.**

PERFORMANCE VERIFICATION

Refer to the preceding information in this manual for complete and detailed instructions.
Follow all Safety Instructions .

Gallons Per Acre

Determine Desired Application Rate From Manufacturers Labeling _____ G.P.A.

Determine a Vehicle Application Speed _____ M.P.H.

Verify Nozzle Spacing is 20".

Determine Gallons Per Minute_____ G.P.M. **(See Nozzle Chart on Page 7)**and Use The Following Formula to verify.

$$\frac{\text{G.P.A. X M.P.H. X 20"}}{5940}$$

$$\frac{\text{_____ x ____ x 20}}{5940} = \frac{\text{_____}}{5940} = \text{_____ G.P.M.}$$

Select Nozzle Size **(See Nozzle Chart on Page 7)** _____based on G.P.M.

Determine Application Pressure_____ P.S.I. **(See Nozzle Chart on Page 7).**

Gallons Per 1,000 sq. ft.

Determine Desired Application Rate From Manufacturers Labeling _____ G.P. 1,000 sq. ft.

Determine a Vehicle Application Speed _____ M.P.H.

Verify Nozzle Spacing is 20"

Determine Gallons Per Minute_____ G.P.M. **(See Nozzle Chart on Page 7)** and Use The Following Formula to verify

$$\frac{\text{G.P. 1,000 sq. ft. X M.P.H. X 20"}}{136}$$

$$\frac{\text{_____ x ____ x 20}}{136} = \frac{\text{_____}}{136} = \text{_____ G.P.M.}$$

Select Nozzle Size **(See Nozzle Chart on Page 7)** based on G.P.M.

Determine Application Pressure_____ P.S.I. **(See Nozzle Chart on Page 7)**

Set Up Spray System

Set Parking Brake.
Fill tank ½ full with water **DO NOT** add Chemical at this time.
Install Correct Nozzles.
Open Suction Valve Handle.
Turn Pump On.
Turn Booms On.
Set Pressure to _____ P.S.I.
Visually Inspect The Output Of All Nozzles.
Turn Booms and Pump Off.
Perform Rate Check.

Rate Check

Verify G.P.A. application rate via **1/128th Acre Method**
Mark off a test course in a flat area at 204 feet.
Drive the Sprayer with a ½ full tank of water at selected **application speed** and record the time it takes to drive 204 feet. _____ seconds. **NOTE: It is important to maintain your application speed during test.**

Rate Check (Cont'd)

Park Vehicle. **SET PARKING BRAKE.**
Turn on pump and all booms and maintain _____ P.S.I (predetermined).
Hold a graduated cylinder under the far left nozzle on the left boom. Collect the output for the same amount of time that it took to travel 204 ft.

Each ounce of fluid collected equals a 1 gallon per acre application rate.

Repeat collection test twice for each nozzle record amount collected each test below.
Proceed through each column separately and completely.

Each Nozzle Should Be Within ± 5% Of The Average Of All Nozzles
Replace Each Nozzle Not ± 5% Of The GPA Average Range
Replace All Nozzles If Two or More Are Not Within The ± 5% GPA Range

#1		**oz/GPA**
#2		**oz/GPA**
#3		**oz/GPA**
#4		**oz/GPA**
#5		**oz/GPA**
#6		**oz/GPA**
#7		**oz/GPA**
#8		**oz/GPA**
#9		**oz/GPA**
#10		**oz/GPA**
#11		**oz/GPA**
Total		
	÷11	
Average 1		**GPA**

#1		**oz/GPA**
#2		**oz/GPA**
#3		**oz/GPA**
#4		**oz/GPA**
#5		**oz/GPA**
#6		**oz/GPA**
#7		**oz/GPA**
#8		**oz/GPA**
#9		**oz/GPA**
#10		**oz/GPA**
#11		**oz/GPA**
Total		
	÷11	
Average 1		**GPA**

Both Averages Should Be Within 5% Of Each Other

CALCULATE RANGE

Gallons Per Acre

Average 1 _____ x .95 = _____ = -5%
Average 1 _____ x 1.05 = _____ = +5%
(GPA Range)

Your GPA Application Rate must fall within the GPA Range

Gallons Per 1,000 sq. ft.

Average 1 _____ x .95 = _____ ÷ 43.56 = _____ = -5% G.P. 1,000 sq. ft.
Average 1 _____ x 1.05 = _____ ÷ 43.56 = _____ = +5% G.P. 1,000 sq. ft.
(GPA Range) (GP 1,000 sq. ft. Range)

Your GP 1,000 sq. ft. Application Rate must fall within the GP 1,000 sq. ft. Range

NOTES:



Helping you put quality into®

The Toro Commercial Products Two Year Limited Warranty

The Toro Company warrants your 1996 or newer Toro Commercial Product ("Product") purchased after January 1, 1997, to be free from defects in materials or workmanship for the period of time listed below. Where a warrantable condition exists, Toro will repair the Product at no cost to you including diagnosis, labor , parts, and transportation. This warranty begins on the date the Product is delivered to the original retail purchaser.

Warranty Duration: Two years or 1500 operational hours*, whichever occurs first.
***Product equipped with hour meter**

Owner Responsibilities:

As the Product owner, you are responsible for required maintenance and adjustments stated in your Owner's Manual. Failure to preform required maintenance and adjustments can be grounds for disallowing a warranty claim.

Instructions for Obtaining Warranty Service:

You are responsible for notifying the Commercial Products Distributor or Authorized Commercial Products Dealer from whom you purchased the Product as soon as you believe a warrantable condition exists.

If you need help locating a Commercial Products Distributor or Authorized Dealer, or if you have questions regarding your warranty rights or responsibilities, you may contact us at:

TORO Commercial Products Service Department
8111 Lyndale Avenue South
Minneapolis, MN 55420-1196
Telephone: (612) 888-8801
Facsimile: (612) 887-8258
E-Mail: Commercial.Service@Toro.Com

Maintenance Parts:

Parts scheduled for replacement as required maintenance ("Maintenance Parts"), are warranted for the period of time up to the scheduled replacement time for that part.

Items/Conditions Not Covered:

Not all product failures or malfunctions that occur during the warranty period are defects in material or workmanship. The items / conditions listed below are not covered by this warranty:

- Product failures which result from the use of non-Toro replacement parts, or from installation and use of add-on, modified, or unapproved accessories are not covered.
- Product failures which result from failure to perform required maintenance and/or adjustments are not covered.
- Product failures which result from operating the Product in an abusive, negligent, or reckless manner are not covered.
- This warranty does not apply to parts subject to consumption through use unless found to be defective. Examples of parts which are consumed, or used up, during normal Product operation include, but are not limited to, blades, reels, bedknives, tines, spark plugs, castor wheels, tires, filters, belts, etc.
- This warranty does not apply to failures caused by outside influence. Items considered to be outside influence include, but are not limited to, weather, storage practices, contamination, use of unapproved coolants, lubricants, additives, or chemicals, etc.
- This warranty does not apply to normal "wear and tear" items. Normal "Wear and Tear" includes, but is not limited to, damage to seats due to wear or abrasion, worn painted surfaces, scratched decals or windows, etc.

Other Legal Disclaimers:

The above remedy of product defects through repair by an authorized distributor or dealer is the purchaser's sole remedy for any defect. This warranty gives you specific legal rights, and you may also have other rights which vary from state to state.

Except for the Emissions warranty referenced below, If applicable, there is no other express warranty. All implied warranties of merchantability and fitness for use are limited to the duration of the express warranty.

Some states do not allow limitations on how long an implied warranty lasts, so the above limitations may not apply to you.

The Toro Company is not liable for indirect, incidental or consequential damages in connection with the use of the Product, including any cost or expense of providing substitute Product or service during periods of malfunction or non-use.

Some states do not allow the exclusion of incidental or consequential damages, so the above exclusion may not apply to you.

Note to California residents: The Emissions Control System on your Product may be covered by a separate warranty meeting requirements established by the U.S. Environmental Protection Agency (EPA), or the California Air Resources Board (CARB). The hour limitations set forth above do not apply to the Emissions Control System Warranty. Refer to the California Emission Control Warranty Statement printed in your Owner's Manual or contained in the engine manufacturer's documentation for details.