Form Number 3350-646

22in Recycler® Lawnmower

Model No. 20013 - 240000001 and up.

Parts Catalog

Ordering Replacement Parts

To order replacement parts, please supply the part number, the quantity, and the description of each part desired.

Understanding Reference Numbers

Each Identified part in an illustration has a reference number. The reference number for a part also appears in the parts list, along with other information about the part.

This catalog uses two special reference number formats, one to indicate parts in a service assembly and another to indicate the quantity of a given part in an illustration.

Service Assembly Reference Numbers

Parts in service assemblies have reference numbers in the form a:b. The a represents the reference number of the entire service assembly and the b represents a sequential number unique to each part within the service assembly.

For example, a wheel assembly might be identified by reference number 6, the tire by 6:1, the valve by 6:2, and the wheel by 6:3. When you order the assembly identified by reference number 6, you receive all parts identified by reference numbers 6:1, 6:2, and 6:3. However, you may also order any part individually. Reference numbers of this type appear in illustrations and in part lists.

Reference Numbers Indicating Quantity

In an illustration, if a reference number indicates more than one part, the reference number has the form nX y. The n represents the quantity of the part, the X is the multiplication symbol, and the y represents the reference number.

For example, in an illustration, the reference number 2X 37 means that two of the parts identified by reference number 37 are indicated.

©The Toro Company - 2004
All Rights Reserved

Part Description Abbreviations

Part descriptions in this catalog may include the following abbreviations.

AR. . . . . as required
ASM. . . . . assembly
CARR. . . . . carriage
DEG. . . . . degrees
FH. . . . . flat head
GA. . . . . gauge
HF. . . . . hex flange
HH. . . . . hex head
HHF. . . . . hex head flange
HHFTF. . . . . hex head flange thread forming
HJ. . . . . hex jam
HLH. . . . . hex lag head
HOC. . . . . height-of-cut
HS. . . . . hex
HSBH. . . . . hex socket button head
HSFH. . . . . hex socket flat head
HSH. . . . . hex socket head
HWH. . . . . hex washer head
HWHTF. . . . . hex washer head thread forming
HYD. . . . . hydraulic
INC. . . . . incorporated
LH. . . . . left hand
NI. . . . . nylon insert
PPH. . . . . phillips pan head
PTH. . . . . phillips truss head
PTO. . . . . power take off
RH. . . . . right hand
SFH. . . . . slotted fillister head
SHH. . . . . slotted hex head
SHWH. . . . . slotted hex washer head
SPH. . . . . slotted pan head
SQH. . . . . square head
SRH. . . . . slotted round head
STD. . . . . standard
TAP. . . . . self tapping
TTH. . . . . torx truss head
WH. . . . . wing head

Footnotes

❶ Not serviced separately
❷ Included in Repair Kit No. 632809
❸ Obtain parts from your local Tecumseh dealer

Contents

Description	Page
Housing Assembly	3
Front Axle and Wheel Assembly	4
Rear Axle and Transmission Assembly	5
Transmission Assembly No. 106-3956	6
Engine and Blade Assembly	7
Handle Assembly	8
Grass Bag Assembly	9
Engine Assembly No. 1 Tecumseh LEV120-362003A	10
Engine Assembly No. 2 Tecumseh LEV120-362003A	12
Carburetor Assembly No. 640303 Tecumseh LEV120-362003A	14
Recoil Starter Assembly No. 590739 Tecumseh No. LEV120-362003A	15
Recoil Starter Assembly No. 590702 (Optional) Tecumseh LEV120-362003A	16

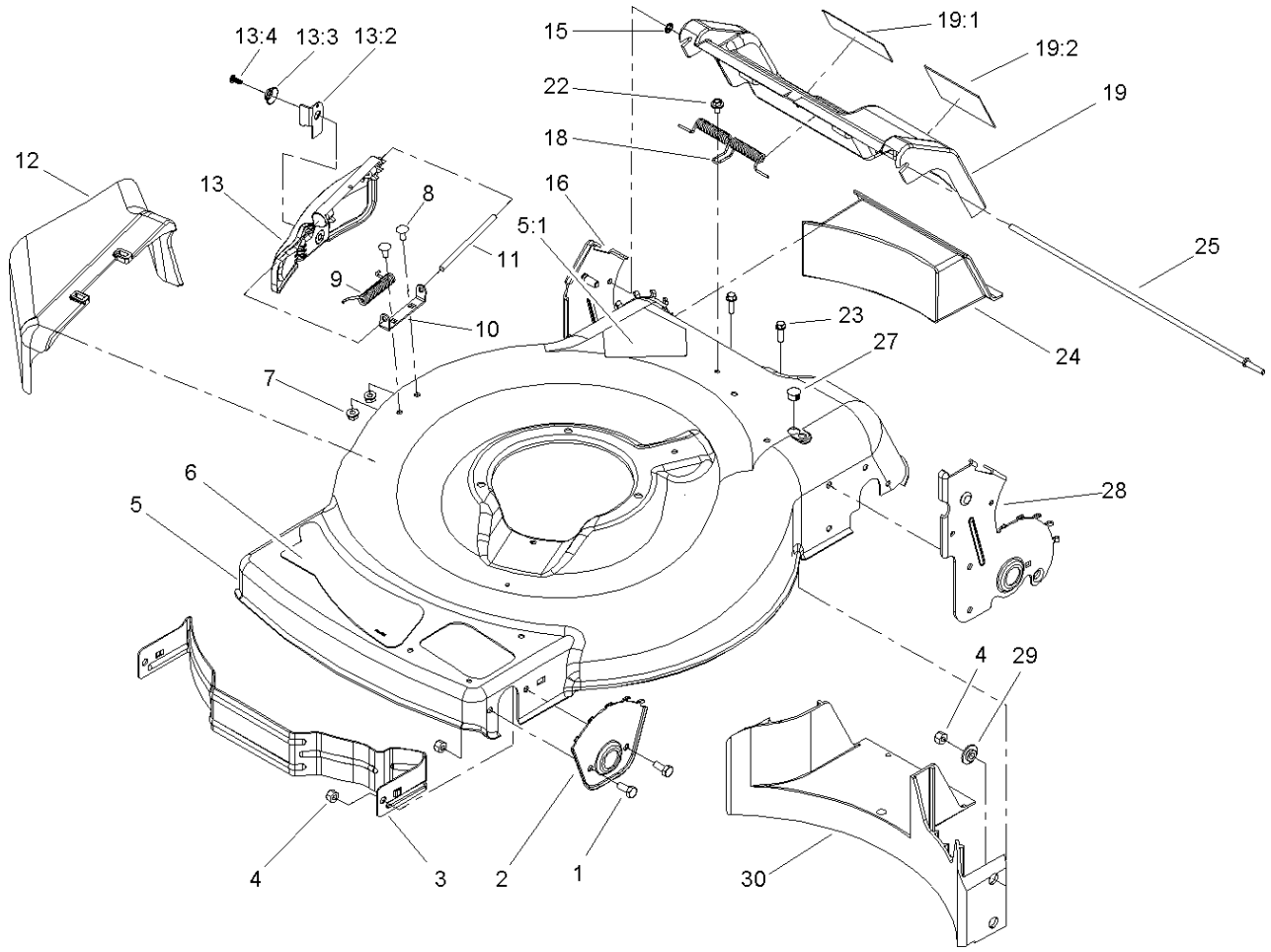

Housing Assembly

Ref	Part No.	Qty.	Description
1	322-3	4	Screw-HH
2	105-1808-03	2	Plate-Hoc, Front
3	104-8694-03	1	Baffle-Front
4	3296-29	8	Nut-Lock, NI
5	104-7916	1	Housing
5:1	94-8072	1	Decal-Danger, Cut Finger
6	105-1297	1	Decal-Deck
7	32128-32	2	Nut-HHF
8	3229-11	2	Screw-CARR
9	99-5293	1	Spring-Torsion
10	99-5292	1	Bracket-Cover
11	99-5291	1	Rod-Cover
12	105-3028	1	Chute-Side Discharge
13	106-8376	1	Discharge Door ASM
13:2	107-0795	1	Latch-Door
13:3	107-7456	1	Cap-Door
13:4	107-7461	1	Screw-Plastite
15	32112-6	1	Pushnut
16	107-0790	1	RH Rear HOC Plate ASM
18	105-3032	1	Spring-Door, Rear
19	105-1324	1	Door
19:1	104-7909	1	Decal-Warning
19:2	104-7908	1	Decal-Warning
22	46-6810	1	Screw And Washer ASM

Ref	Part No.	Qty.	Description
23	46-8091	2	Screw-HWH
24	105-1842	1	Plug-Discharge, Rear
25	105-1827	1	Rod-Pivot, Rear Door
27	104-9369	1	Plug-Dome
28	107-0783	1	LH Rear HOC Plate ASM
29	105-3006	4	Washer-Stepped
30	105-1834	1	Baffle-Rear

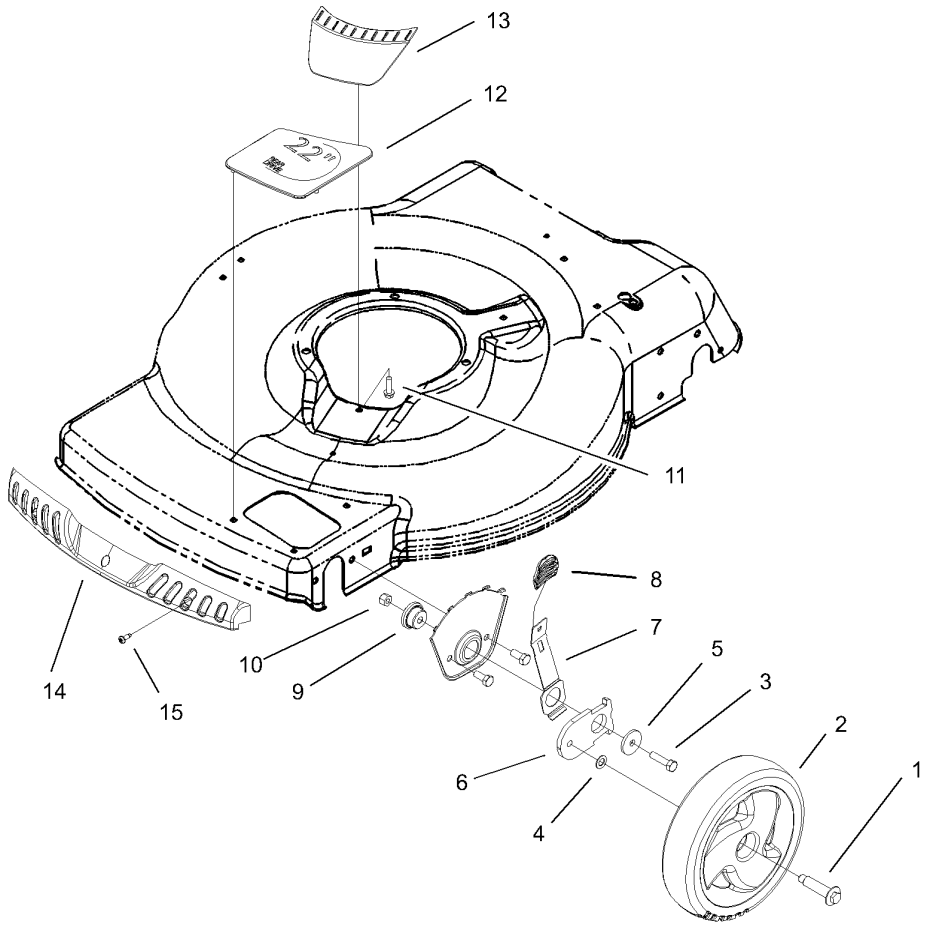

Front Axle and Wheel Assembly

Ref	Part No.	Qty.	Description
1	614650	2	Bolt-Shoulder
2	105-1814	2	Wheel ASM
3	322-6	2	Screw-HH
4	40-1940	2	Washer
5	105-3048	2	Washer-Flat
6	105-1807	2	Arm-Pivot, Front
7	105-1809	2	Arm-Spring
8	105-3042	2	Knob-Lever, HOC
9	105-1818	2	Bushing-Mount, HOC
10	3296-29	2	Nut-Lock, NI
11	46-8091	1	Screw-HWH
12	105-3004	1	Cover-Cutout
13	105-3005	1	Cover-Belt Opening
14	104-9359	1	Bumper-Mower
15	105-6849	3	Screw-Thread Forming

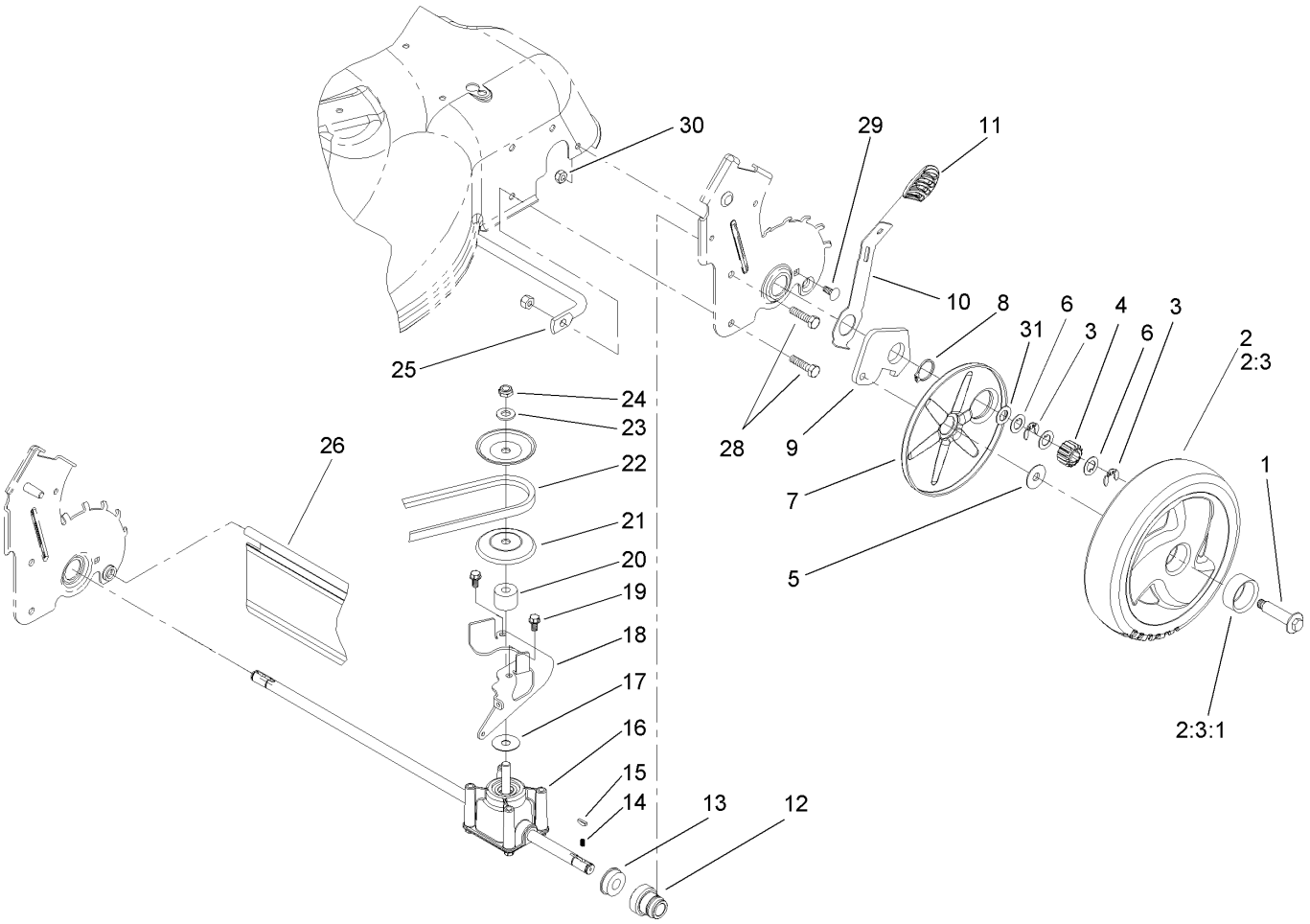

Rear Axle and Transmission Assembly

Ref	Part No.	Qty.	Description
1	614650	2	Bolt-Shoulder
2	105-3036	2	Wheel Gear ASM
❶2:3		1	Wheel Bushing ASM
2:3:1	27-6250	2	Bushing
3	65-2720	4	Klipring-Locking
4	105-3040	2	Gear-Pinion, 15t
5	614426	2	Washer-Stepped
6	105-6840	6	Washer-Thrust
7	105-1838	2	Cover-Wheel
8	32151-36	2	Ring-Retaining
9	105-1819	2	Arm-Pivot, Rear
10	105-1809	2	Arm-Spring
11	105-3042	2	Knob-Lever, HOC
12	104-8698	2	Retainer-Bearing, HOC
13	104-8699	2	Bearing-Ball
14	39-9650	2	Spring-Compression
15	612066	2	Key
16	106-3956	1	Transmission ASM
17	105-6814	1	Washer-Shield
18	105-1832-03	1	Bracket-Pivot
19	32144-4	2	Screw-HWH
20	92-5791	1	Spacer
21	100-1176	2	Pulley-Half
22	91-2258	1	V-Belt

Ref	Part No.	Qty.	Description
23	3256-24	1	Washer-Flat
24	3296-5	1	Nut-Lock, NI
25	105-1811	1	Brace-HOC Plate
26	105-1843	1	Shield-Trailing
28	322-6	4	Screw-HH
29	3229-11	2	Screw-CARR
30	3296-16	2	Nut-Lock, NI
31	36-4780	1	Washer

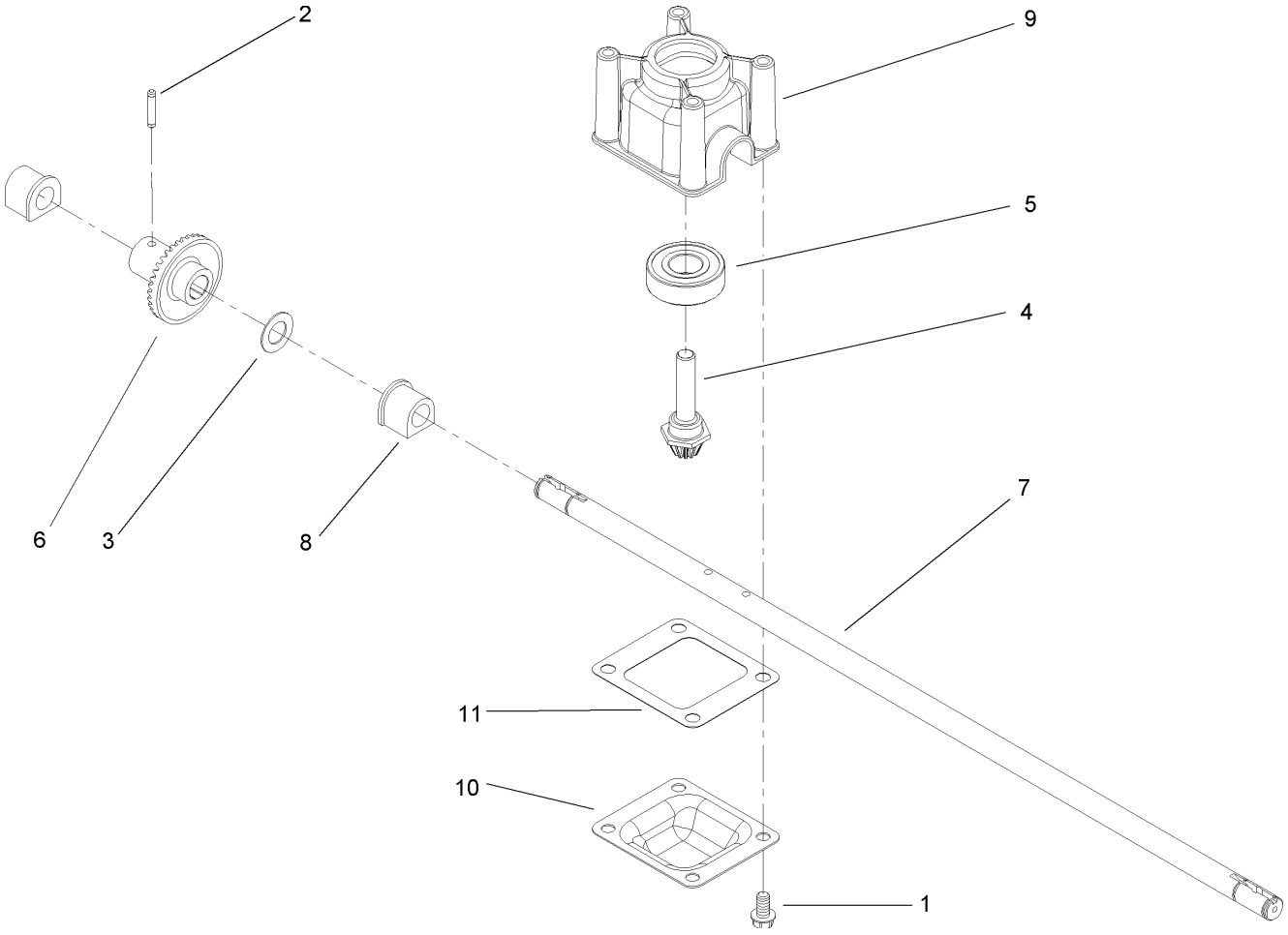

Transmission Assembly No. 106-3956

Ref	Part No.	Qty.	Description
1	32144-4	4	Screw-HWH
2	105-6817	1	Pin-Groove
3	36-4780	1	Washer
4	92-5790	1	Pinion
5	100-1048	1	Bearing-Ball
6	104-8671	1	Gear-Bevel, 37t
7	106-3957	1	Shaft-Output
8	104-8673	2	Bushing-Shaft, Output
9	104-8674	1	Gearcase-Upper
10	104-8675-03	1	Cover-Gearcase
11	105-6839	1	Gasket-Gearcase

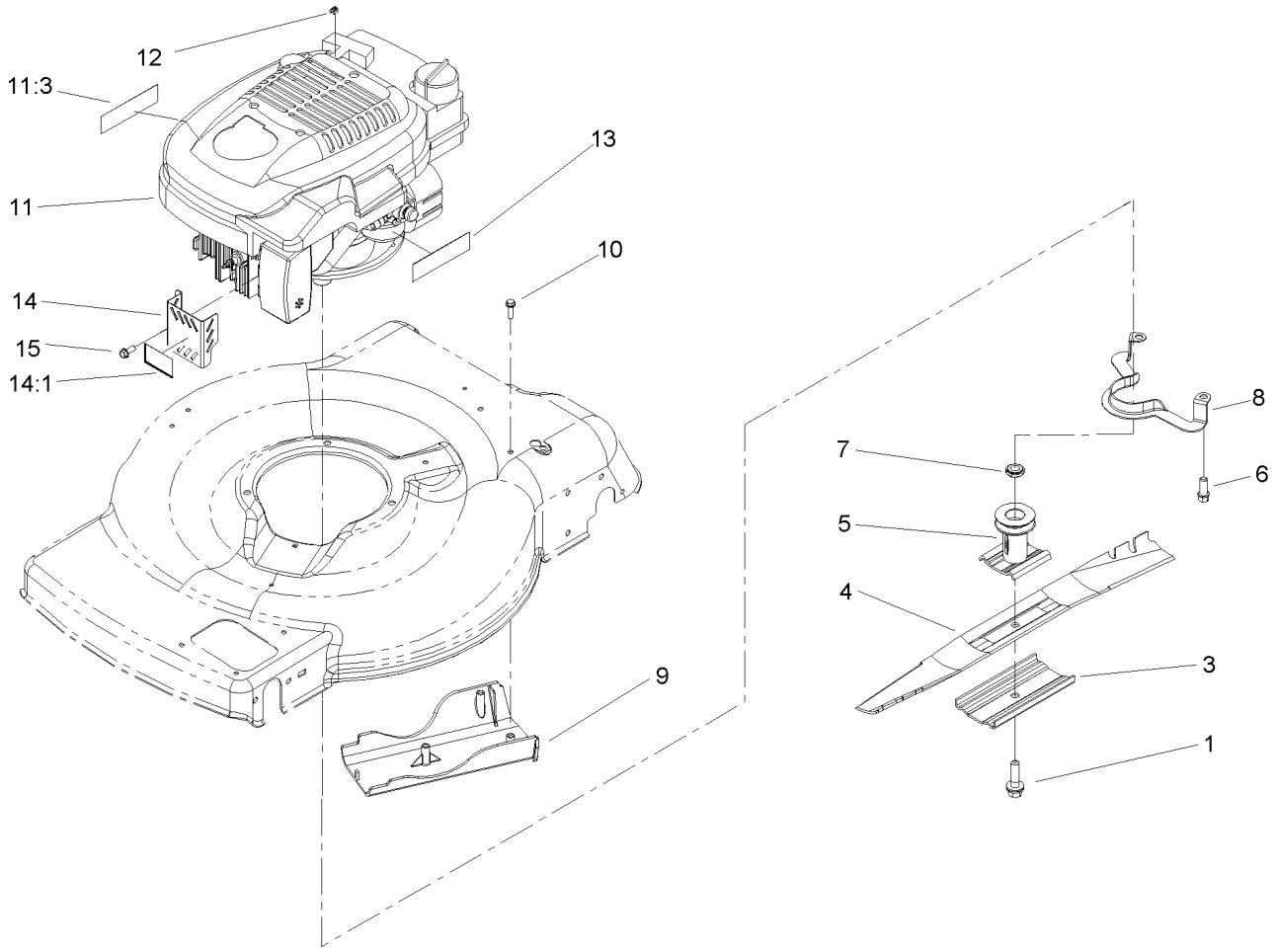

Engine and Blade Assembly

Ref	Part No.	Qty.	Description
1	105-8579	1	Bolt-Blade
3	105-3029-03	1	Support-Blade
4	104-8697-03	1	Blade-22 Inch
5	106-3987	1	Blade Driver ASM
6	95-1726	3	Screw-Taptite
7	106-3999	1	Spacer-Driver
8	105-3030-03	1	Guide-Belt
9	105-1835	1	Cover-Belt, Rear
10	46-8091	3	Screw-HWH
❶11		1	Engine-Tecumseh, Lv195ea-362003b
11:3	105-6815	1	Decal-Recoil
12	92-1701	1	Stop-Rope
13	105-6832	1	Decal-Primer
14	106-8387	1	Muffler Guard Assembly
14:1	106-5517	1	Decal-Surface, Hot
15	32144-4	1	Screw-HWH

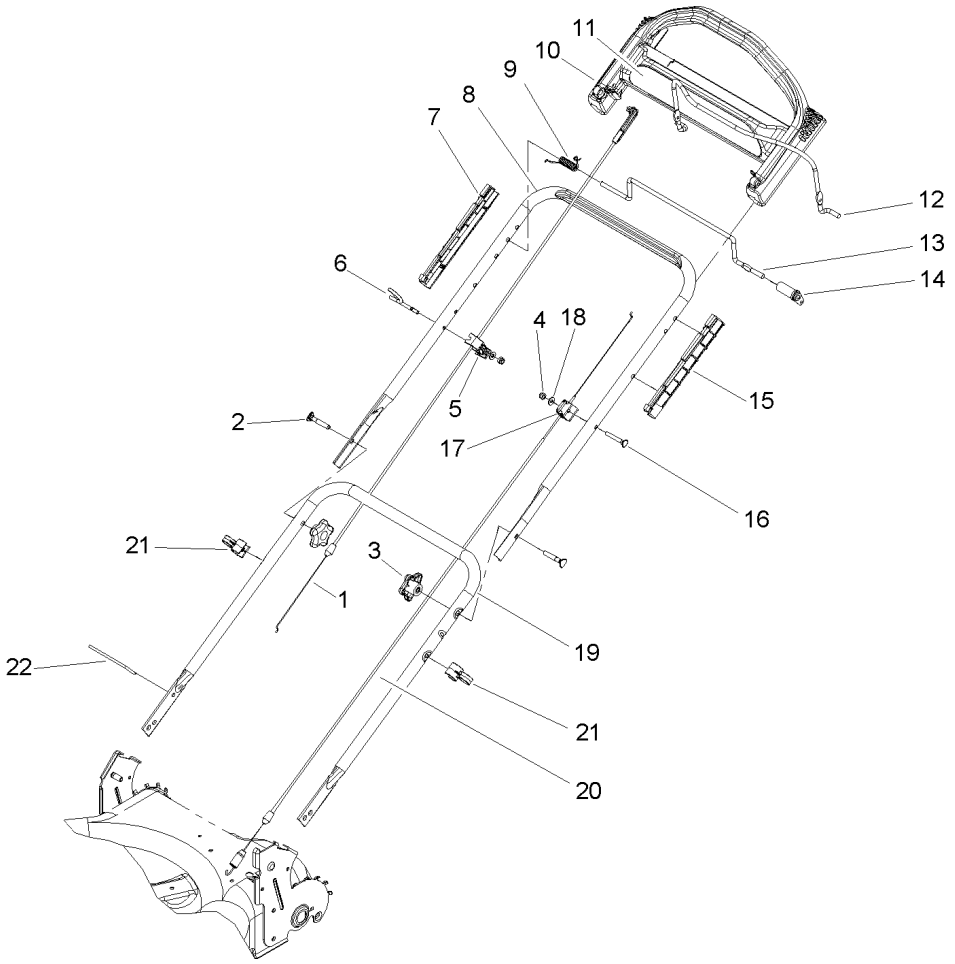

Handle Assembly

Ref	Part No.	Qty.	Description
1	104-8676	1	Cable-Brake
2	92-2260	2	Screw-Handle
3	106-4161	2	Knob-Handle
4	3296-73	2	Nut-Lock, NI
5	106-8331	1	Anchor-Cable
6	106-8330	1	Guide-Rope
7	105-6841	2	Guide-RH
8	104-8680-05	1	Handle-Upper
9	104-8690	1	Spring-Torsion
10	104-8678	1	Handle-Control
11	105-3033	1	Decal-Control Handle
12	104-8679-03	1	Bail-Brake
13	99-1588	1	Bar-Control, Traction
14	99-1589	1	Lever-Traction
15	105-6842	2	Guide-LH
16	95-4453	1	Screw
17	92-7729	1	Anchor-Cable, Upper
18	3256-1	2	Washer-Flat
19	107-0784-05	1	Handle-Lower
20	105-1844	1	Cable-Traction
21	106-6805	2	Guide-Cable
22	614249	1	Strap-Tie

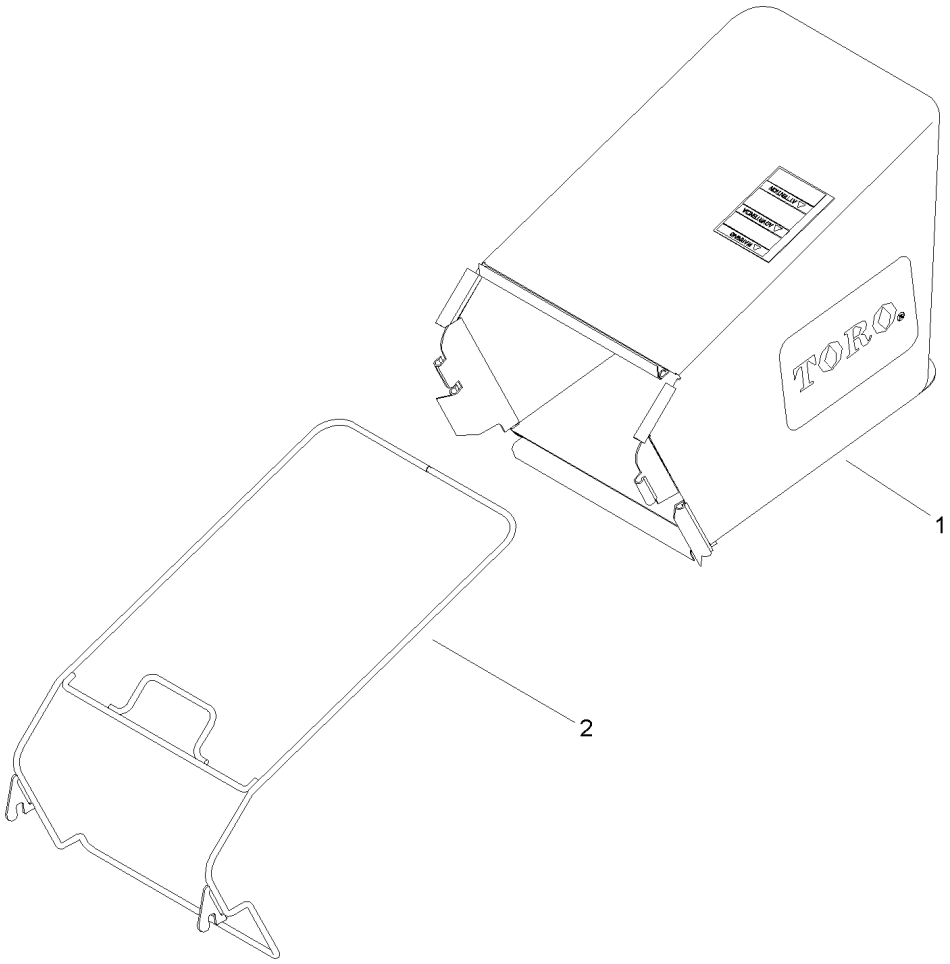

Grass Bag Assembly

Ref	Part No.	Qty.	Description
1	105-3011	1	Grass Bag ASM
2	105-6831-03	1	Brace Bag Frame ASM

Engine Assembly No. 1
Tecumseh LEV120-362003A

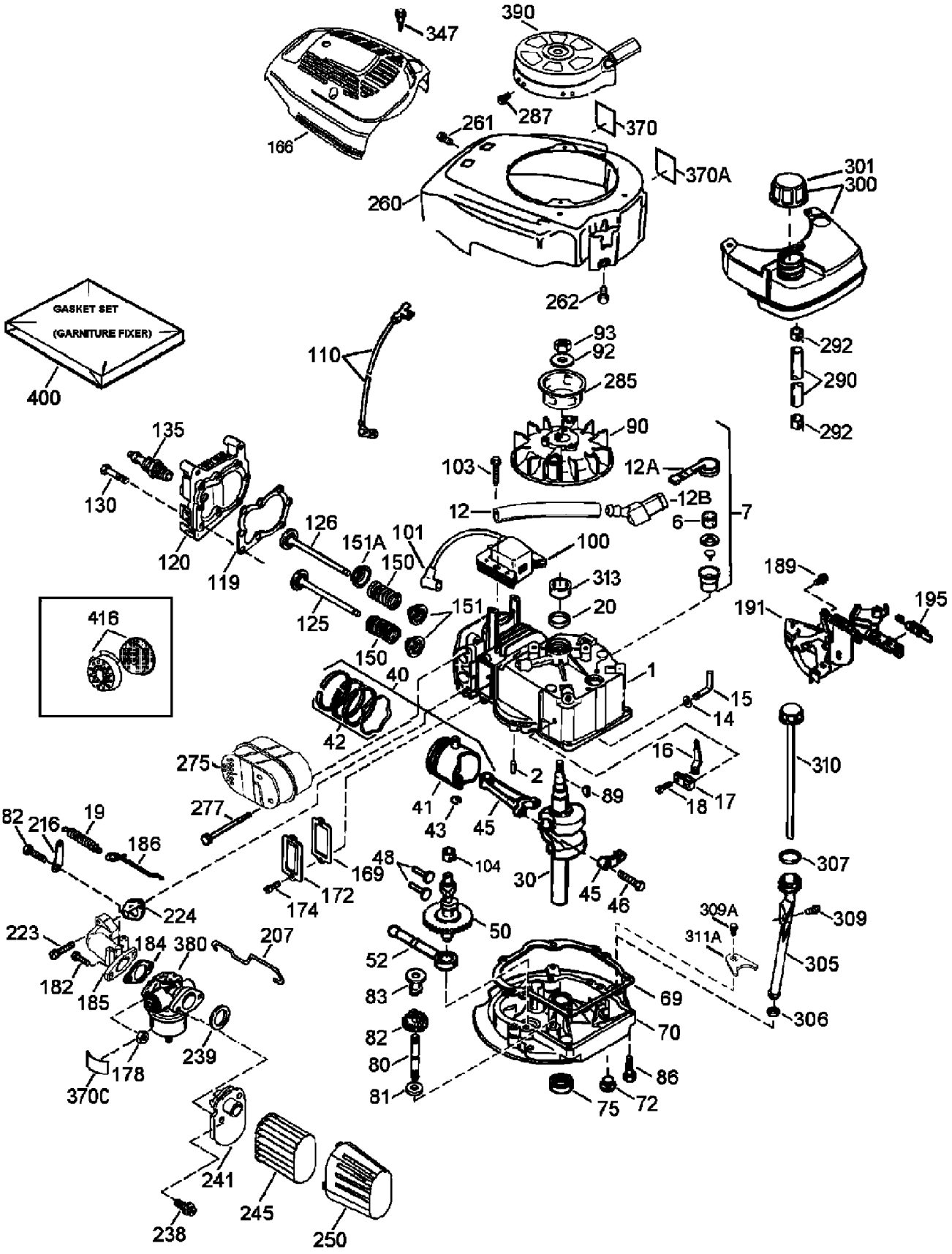

Engine Assembly No. 1
Tecumseh LEV120-362003A

Ref	Part No.	Qty.	Description
1	37465	1	Cylinder ASM (Incl. Ref. #2, 20 And 150)
2	26727	2	Pin-Dowel
6	33734	1	Element-Breather
7	36557	1	Breather ASM (Incl. Ref. #6 And 12a)
12	36775	1	Tube-Breather
12A	36558	1	Breather Cover And Tube ASM
12B	36694	1	Elbow-Breather, Tube
14	28277	1	Washer
15	30589	1	Governor Rod ASM (Incl. Ref. #14)
16	34839A	1	Lever-Governor
17	31335	1	Lever Clamp-Governor
18	651018	1	Screw, T-15, 8-32 X 19/64in
19	36281	1	Spring-Extension
20	32600	1	Seal-Oil
30	37692	1	Crankshaft
40	40027	1	Piston, Pin And Ring Set (Std.)
41	40042	1	Piston And Pin ASM (Std.)(Incl. Ref. #43)
42	40006	1	Ring Set (Std.)
43	20381	2	Retaining Ring-Piston Pin
45	36777	1	Connecting Rod ASM (Incl. Ref. #46)
46	32610A	2	Bolt-Connecting Rod
48	27241	2	Lifter-Valve
50	37460	1	Camshaft (Incl. Ref. #104)
52	29914	1	Oil Pump ASM
69	37609	1	Gasket-Mounting Flange
70	37608	1	Mounting Flange ASM (Incl. Ref. #72-83, 206, 309a And 311a)
72	37614	1	Plug-Oil Drain
75	27897	1	Seal-Oil
80	30574A	1	Shaft-Governor
81	30590A	1	Washer
82	30591	1	Gear-Governor (Incl. Ref. #81)
83	30588A	1	Spool-Governor
86	650488	6	Screw, 1/4-20 X 1-1/4in
89	611004	1	Key-Flywheel
90	611112	1	Flywheel
92	650815	1	Washer-Belleville
93	650816	1	Nut-Flywheel
100	34443C	1	Ignition-Solid State
101	610118	1	Cover-Spark Plug
103	651007	2	Screw, T-15, 10-24 X 15/16in
104	37480	1	Bushing-Cam
110	37047	1	Wire-Ground
119	36787	1	Gasket-Cylinder Head
120	36825	1	Head-Cylinder
125	36780	1	Valve-Exhaust (1/32" Os) (Incl. Ref. #151)
125	37288	1	Valve-Exhaust (Std.) (Incl. Ref. #151)
126	37289	1	Valve-Intake (Std.) (Incl. Ref. #151 And 151a)
130	6021A	8	Screw, 5/16-18 X 1-7/16in
135	35395	1	Resistor Spark Plug (Rj19lm)
150	31672	2	Spring-Valve
151	31673	2	Cap-Valve Spring
151A	40017	1	Seal-Intake Valve
166	37694	1	Shroud-Engine
169	36783	1	Gasket-Valve Cover
172	36784	1	Cover-Valve
174	30200	2	Screw, 10-24 X 9/16in
178	29752	2	Nut And Lock Washer, 1/4-28
182	6201	2	Screw, 1/4-28 X 7/8in
184	26756	1	Gasket-Carburetor To Intake Pipe
185	37466	1	Pipe-Intake
186	32653	1	Link-Governor
189	650839	2	Screw, 1/4-20 X 3/8in
191	36559A	1	Bracket-Brake, S.e (Incl. Ref. #195)
195	610973	1	Terminal
207	34336A	1	Link-Throttle
216	33086	1	Lever-R.p.m. Adjusting
223	650451	2	Screw, 1/4-20 X 1in
224	36786	1	Gasket-Intake Pipe
238	650932	2	Screw, 10-32 X 49/64in
239	34338	1	Gasket-Air Cleaner
241	36919	1	Collar-Air Cleaner
245	36905	1	Filter-Air Cleaner
250	37122	1	Cover-Air Cleaner
260	37696A	1	Housing-Blower
261	30200	2	Screw, 10-24 X 9/16in
262	650831	2	Screw, 1/4-20 X 1/2in
275	37498	1	Muffler
277	650988	2	Screw, 1/4-20 X 2-9/32in
285	35000A	1	Cup-Starter
287	650926	2	Screw, 8-32 X 21/64in
290	29774	1	Line-Fuel
292	26460	2	Clamp-Fuel Line
300	35586A	1	Tank-Fuel (Incl. Ref. #292 And 301)
301	36246	1	Fuel Cap ASM
305	35647	1	Tube-Oil Fill
306	37610	1	O-Ring
307	35499	1	O-Ring
309	650562	1	Screw, 10-32 X 1/2in
309A	650783	1	Screw, 10-24 X 3/4in
310	35648	1	Dipstick
311A	37611	1	Bracket-Hold Down

Engine Assembly No. 2
Tecumseh LEV120-362003A

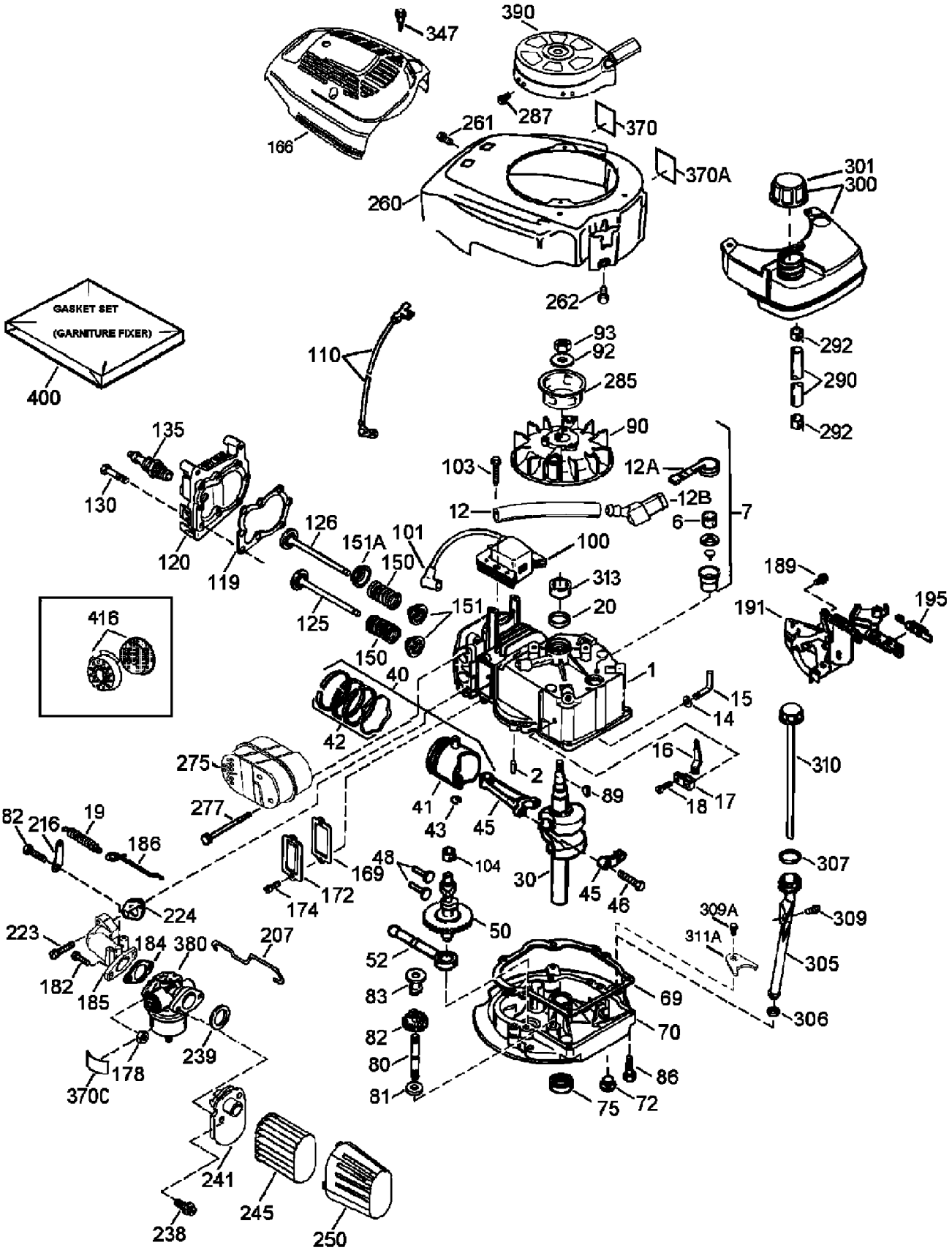

Engine Assembly No. 2
Tecumseh LEV120-362003A

Ref	Part No.	Qty.	Description
313	34080	1	Spacer
347	650898A	1	Screw, 10-32 X 27/32in
370	35977	1	Decal-Warning
370A	36261	2	Decal-Lubrication
370C	37695	1	Decal-primer(3 X)
380	640303	1	(Incl. Ref. #184 Of Engine Parts List)
390	590739	1	Starter-Rewind
400	37613	1	Gasket Set (Incl. Items Marked Pk In Notes)
416	37530	1	Spark Arrestor Kit (Optional)
	750876	1	Short Block Asm

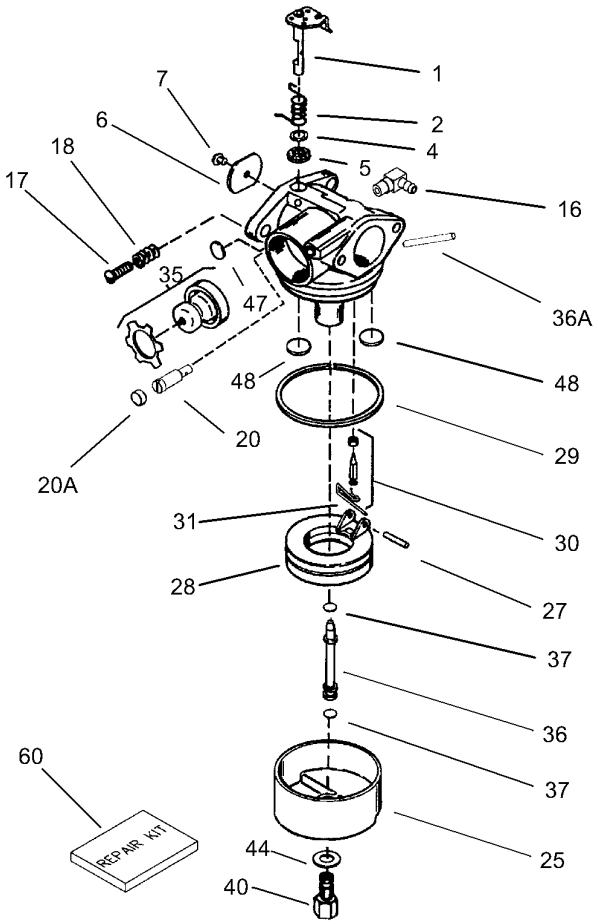

Carburetor Assembly No. 640303
Tecumseh LEV120-362003A

Ref	Part No.	Qty.	Description
❸0	640303	1	Carburetor ASM (Incl. Ref. #184)
❸1	631615	1	Throttle Shaft & Lever ASM
❸2	631767	1	Spring-Throttle Return
❷❸4	631184	1	Washer-Dust Seal
❷❸5	631183	1	Seal-Dust
❸6	640070	1	Shutter-Throttle
❷❸7	650506	1	Screw-Shutter
❸16	631807	1	Fitting-Fuel
❸17	651025	1	Throttle Crack Screw/idle Speedscrew
❸18	630766	1	Spring-Tension
❸20	640018	1	Screw-Idle Restrictor
❷❸20A	640200	1	Cap-Idle Restrictor Screw
❸25	631867	1	Bowl-Float
❷❸27	631024	1	Shaft-Float
❸28	632802	1	Float (Plastic)
❷❸29	631028	1	O-Ring-Float Bowl
❷❸30	632807	1	Inlet Needle, Seat, And Clip (Incl. Ref. #31)
❷❸31	631022	1	Spring Clip
❸35	640259	1	Primerbulb (Red)/retainer Ring
❸36	640019	1	Tube-Main Nozzle
❸36A	632766	1	Extension-Bowl Vent Tube
❷❸37	632547	2	O-Ring-Main Nozzle Tube

Ref	Part No.	Qty.	Description
❸40	640087	1	Nut-High Speed Bowl
❷❸44	27110A	1	Washer-Bowl Nut
❷❸47	630748	1	Welch Plug-Idle Mixture Well
❷❸48	631027	2	Welch Plug-Atmospheric Vent
❷❸60	632809	1	Repair Kit

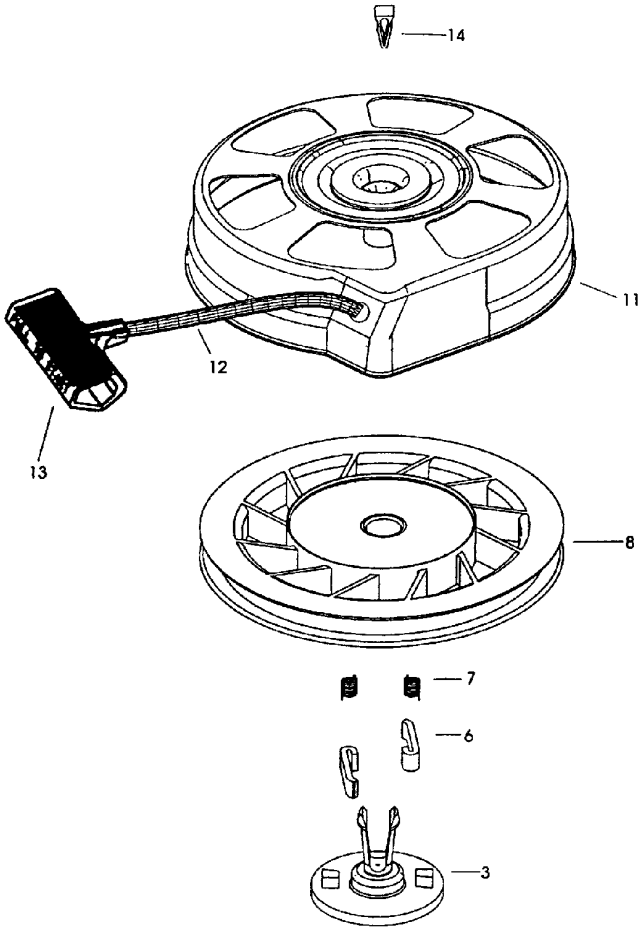

Recoil Starter Assembly No. 590739
Tecumseh No. LEV120-362003A

Ref	Part No.	Qty.	Description
❸0	590739	0	Starter-Rewind
❸3	590740	1	Retainer
❸6	590616	2	Dog-Starter
❸7	590617	2	Spring-Dog
❸8	590618A	1	Pulley And Rewind Spring ASM
❸11	590638	1	Housing Assembly-Starter
❸12	590535	1	Rope-Starter (Length 98in X 9/64in Dia.)
❸13	590701	1	Handle-Starter
❸14	590760	1	Spring Clip

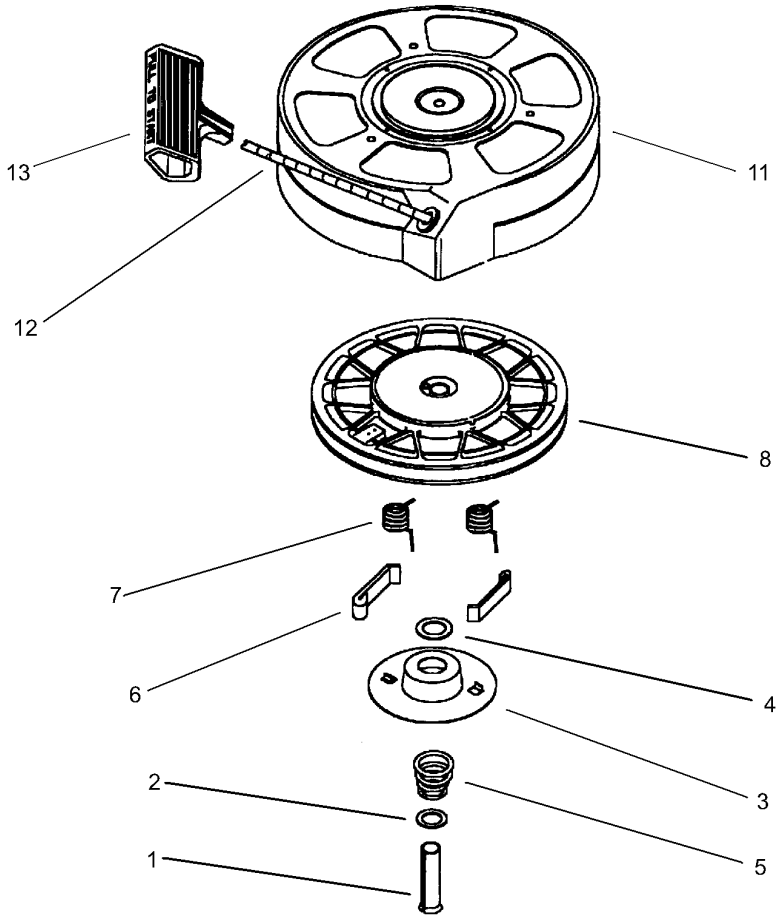

Recoil Starter Assembly No. 590702 (Optional)
Tecumseh LEV120-362003A

Ref	Part No.	Qty.	Description
❸0	590702	0	Starter-Recoil
❸1	590599A	1	Spring Pin (Incl. Ref. #4)
❸2	590600	1	Washer
❸3	590696	1	Retainer
❸4	590601	1	Washer
❸5	590697	1	Spring-Brake
❸6	590698	2	Dog-Starter
❸7	590699	2	Spring-Dog
❸8	590700	1	Pulley And Rewind Spring ASM
❸11	590703A	1	Starter Housing ASM (40 Degree Grommet)
❸12	590535	1	Rope-Starter (Length 98in X 9/64in Dia.)
❸13	590701	1	Handle-Starter

NOTES

NOTES

NOTES


TORO®