Form No. 3464-609 Rev B

TORO®

Count on it.

Parts Catalog

Greensmaster® 3400 TriFlex®

Traction Unit

Model No. 04520—Serial No. 414740186 and Up

Register at www.Toro.com.
Original Instructions (EN)

3464-609 B

Ordering Replacement Parts

To order replacement parts, please supply the part number, the quantity, and the description of each part desired.

Understanding Reference Numbers

Each identified part in an illustration has a reference number. The reference number for a part also appears in the parts list, along with other information about the part.

This catalog uses two special reference number formats, one to indicate parts in a service assembly and another to indicate the quantity of a given part in an illustration.

Service Assembly Reference Numbers

Parts in service assemblies have reference numbers in the form a:b. The a represents the reference number of the entire service assembly and the b represents a sequential number unique to each part within the service assembly.

For example, a wheel assembly might be identified by reference number 6, the tire by 6:1, the valve by 6:2, and the wheel by 6:3. When you order the assembly identified by reference number 6, you receive all parts identified by reference numbers 6:1,6:2, and 6:3. However, you may also order any part individually. Reference numbers of this type appear in illustration and in parts lists.

Reference Numbers Indicating Quantity

In an illustration, if a reference number indicates more than one part, the reference number has the form nX y. The n represents the quantity of the part, the X is the multiplication symbol, and the y represents the reference number.

For example, in an illustration, the reference number 2X 37 means that two of the parts identified by reference number 37 are indicated.

Contents

Roll-Over Protection System Assembly 5
Brake Cable Grommet Assembly 6
Frame Assembly 7
Platform Assembly 8
Right Hand Support Platform Assembly 9
Seatbase Assembly 10
Steering Arm and Adjuster Assembly 11
Brake Cable and Lever Assembly 12
Back Wheel Assembly 13
Hydraulic Cylinder Assembly No. 117-4480 14
Front Wheel Assembly 15
Right Hand Brake Assembly No. 139-2722 16
Left Hand Brake Assembly No. 139-2721 17
Right Hand Wheel Motor Assembly No. 117-4302 18
Left Hand Wheel Motor Assembly No. 117-4303 19
Console and Reel Control Assembly 20
Traction Interface Control Assembly 21
Ignition and Throttle Control Assembly 22
Console Cable Routing Assembly 23
Engine and Exhaust Assembly 24
Radiator, Fuel Pump and Air Cleaner Assembly 26
Air Cleaner Assembly No. 95-5805 27
Radiator, Air Hose and Fuel Line Assembly 28
Bellhousing Assembly 29
Fuel and Hydraulic Tank Assembly 30
Controller Assembly 31
Battery Assembly 32
Wire Harness Assembly 33
Pump Coupling Assembly 34
Neutral Centering Assembly 35
Traction Drive Hydraulic Line Assembly 36
Traction Drive Hose Routing Assembly 37
Hydraulic Mow Assembly 38
Hydraulic Mow Manifold Assembly 39
Hydraulic Mow Manifold Assembly No. 147-3079 40
Hydraulic Mow Clamp Assembly 41
Hydraulic Mow Hose Routing Assembly 42
Hydraulic Mow Reel Motor Assembly 43
Hydraulic Reel Motor Assembly No. 115-3321 44
Hydraulic Mow Gear Pump Assembly 45
Hydraulic Gear Pump Assembly No. 114-9956 46
Lift Circuit Assembly 47
Steering Valve Assembly No. 114-4672 49
Hydraulic Cylinder Assembly No. 119-8129 50
Hydraulic Cylinder Assembly No. 119-8128 51
Hydraulic Lift Manifold Assembly 52
Hydraulic Lift Manifold Assembly No. 125-5187 53
Steering Circuit Assembly (1) 54
Steering Circuit Assembly (3) 55
Suspension and Basket Assembly 56
Basket Assembly No. 132-9599 57
Suspension Pin Position Assembly 58
Suspension A-Arm Assembly 59
Suspension Crossarm Assembly 60

© 2025—The Toro® Company
8111 Lyndale Avenue South
Bloomington, MN 55420

Contact us at www.Toro.com.
Printed in the USA.
All Rights Reserved

Contents (continued)

Crankcase Assembly 61
Oil Pan, Oil Pump and Dipstick Assembly 62
Cylinder Head Assembly 63
Gear Case and Oil Filter Cartridge Assembly 64
Cylinder Head Cover Assembly 65
Main Bearing Case Assembly 66
Camshaft and Idle Gear Shaft Assembly 67
Piston and Crankshaft Assembly 68
Fuel Camshaft Assembly 69
Idle Apparatus and Fuel Pump Cover Assembly 70
Stop Solenoid and Speed Control Plate Assembly 71
Injection Pump Assembly 72
Governor Assembly 73
Nozzle Holder and Glow Plug Assembly 74
Nozzle Holder Assembly 75
Alternator and Pulley Assembly 78
Alternator Components Assembly 79
Starter and Flywheel Assembly 80
Starter Component Assembly 81
Water Flange and Thermostat Assembly 82
Water Pump and Water Pipe Assembly 83
Valve and Rocker Arm Assembly 84
Inlet and Exhaust Manifold Assembly 85
Attachments and Accessories 86

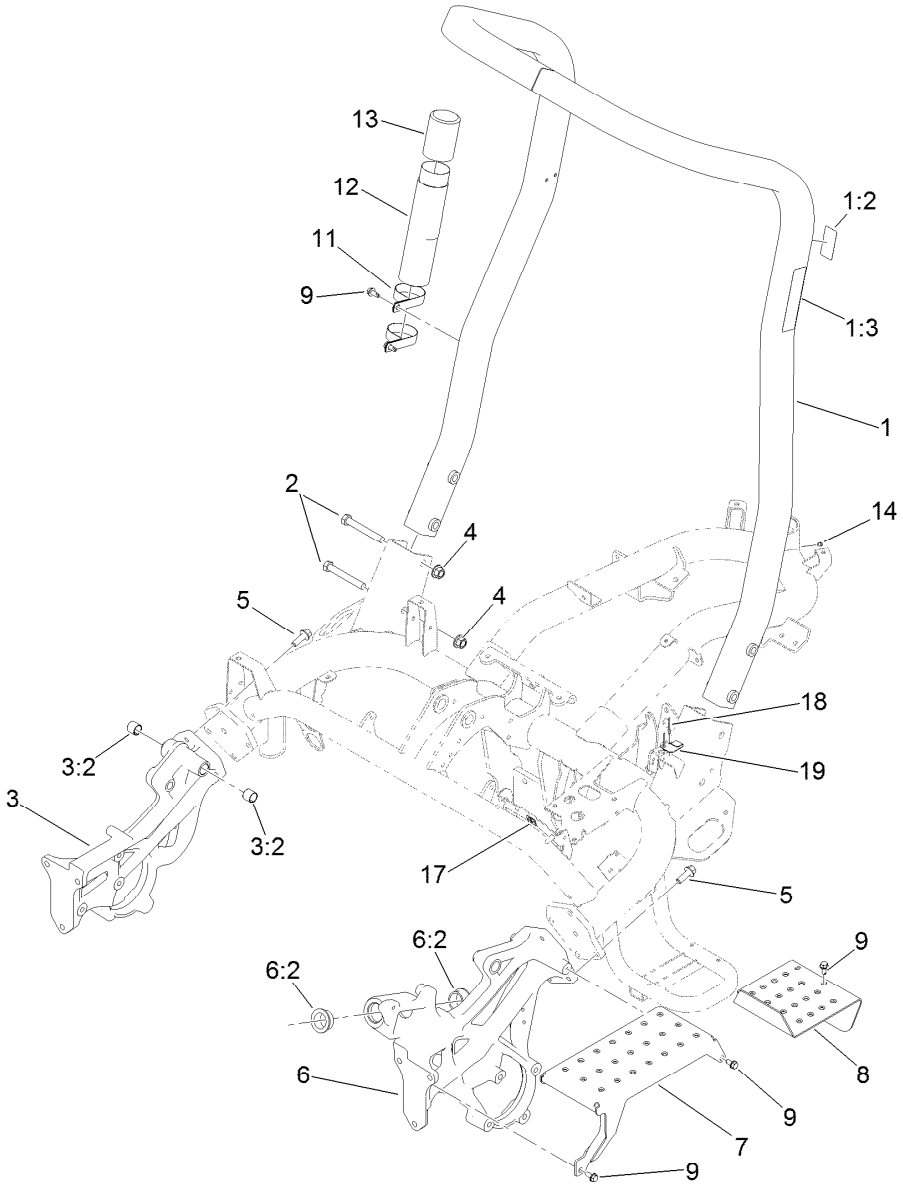

Roll-Over Protection System Assembly

Ref.	*Part Number*	*Qty.*	*Description*
1	115-8206	1	ROPS ASM
1:2	115-8199	1	Decal-ROPS
1:3	115-8226	1	Decal-ROPS
2	325-35	4	Screw-HH
3	117-9023	1	Casting-Side, RH
3:2	94-9609	2	Bushing-Straight
4	99-5107	4	Nut-HF Nylock
5	117-9035	8	Screw-HHF
6	117-9022	1	Casting-Side, LH
6:2	60-0080	2	Bushing

Ref.	*Part Number*	*Qty.*	*Description*
7	117-9051-01	1	Step
8	119-4468-01	1	Plate-Step
9	32104-32	9	Screw-HWH
11	2412-133	2	Clamp-R
12	104-7050	1	Tube-Manual
13	104-7048	1	Cap-Housing
14	302-59	1	Plug-EXT Hex Spl
17	119-1730	1	Receptacle-Clip, Mini
18	3269-32	2	Rivet-Pop
19	121-5865	1	Clip-Cover, Back



Brake Cable Grommet Assembly

Ref.	*Part Number*	*Qty.*	*Description*
1	240-5	1	Grommet
2	98-8529	3	Grommet

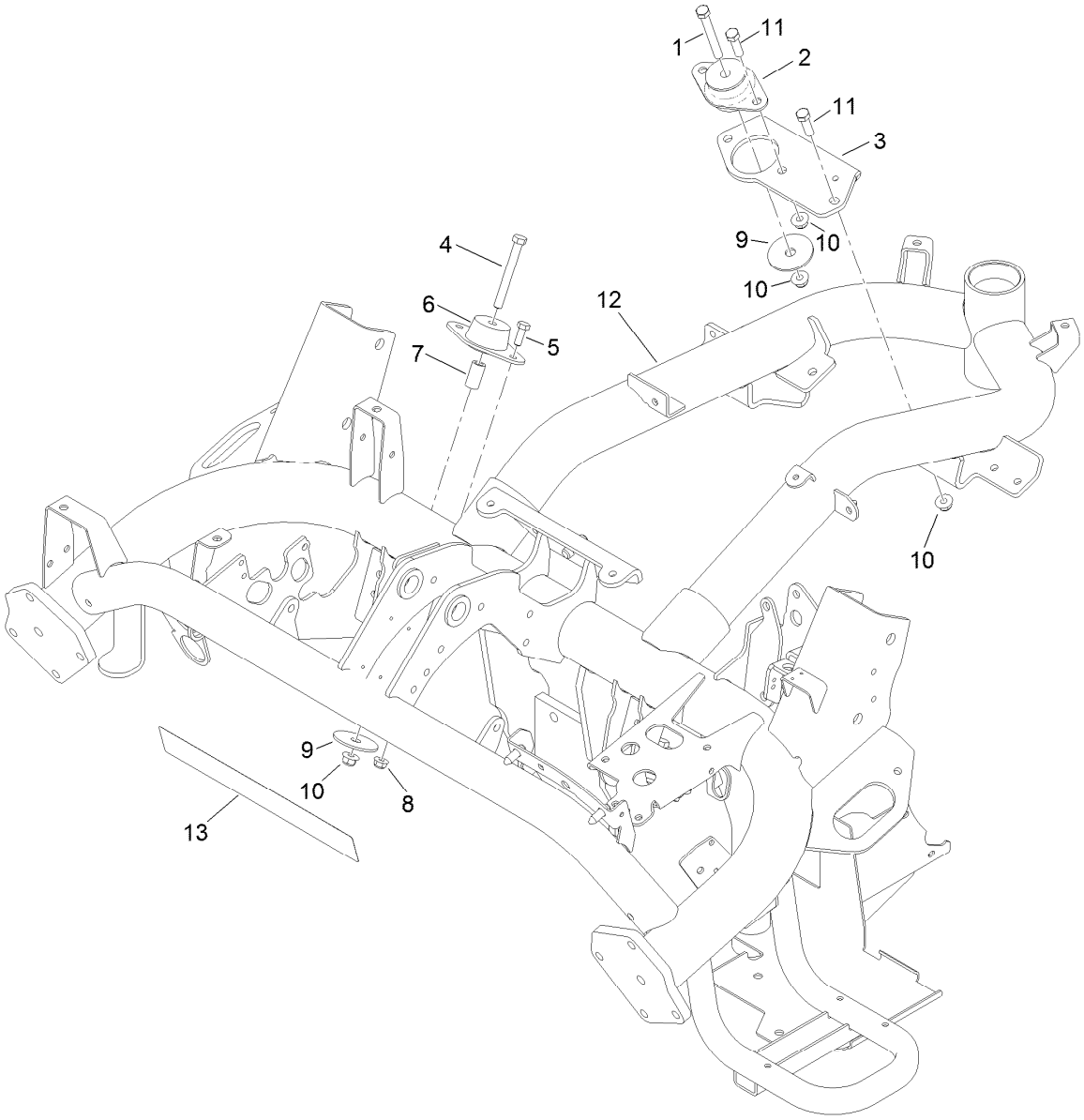

Frame Assembly

Ref.	*Part Number*	*Qty.*	*Description*
1	323-14	1	Screw-HH
2	131-1821	1	Mount-Engine
3	119-2134-01	1	Bracket-Mount, Rear
4	323-20	2	Screw-HH
5	322-4	4	Screw-HH
6	121-9076	2	Mount-Engine
7	110-4631	2	Tube-Spacer
8	104-8300	4	Nut-HF, NI
9	87-5100	3	Washer-Snubbing
10	104-8301	6	Nut-HF, NI
11	323-7	3	Screw-HH
12	147-3071-01	1	Frame ASM [red]
13	119-9347	1	Decal

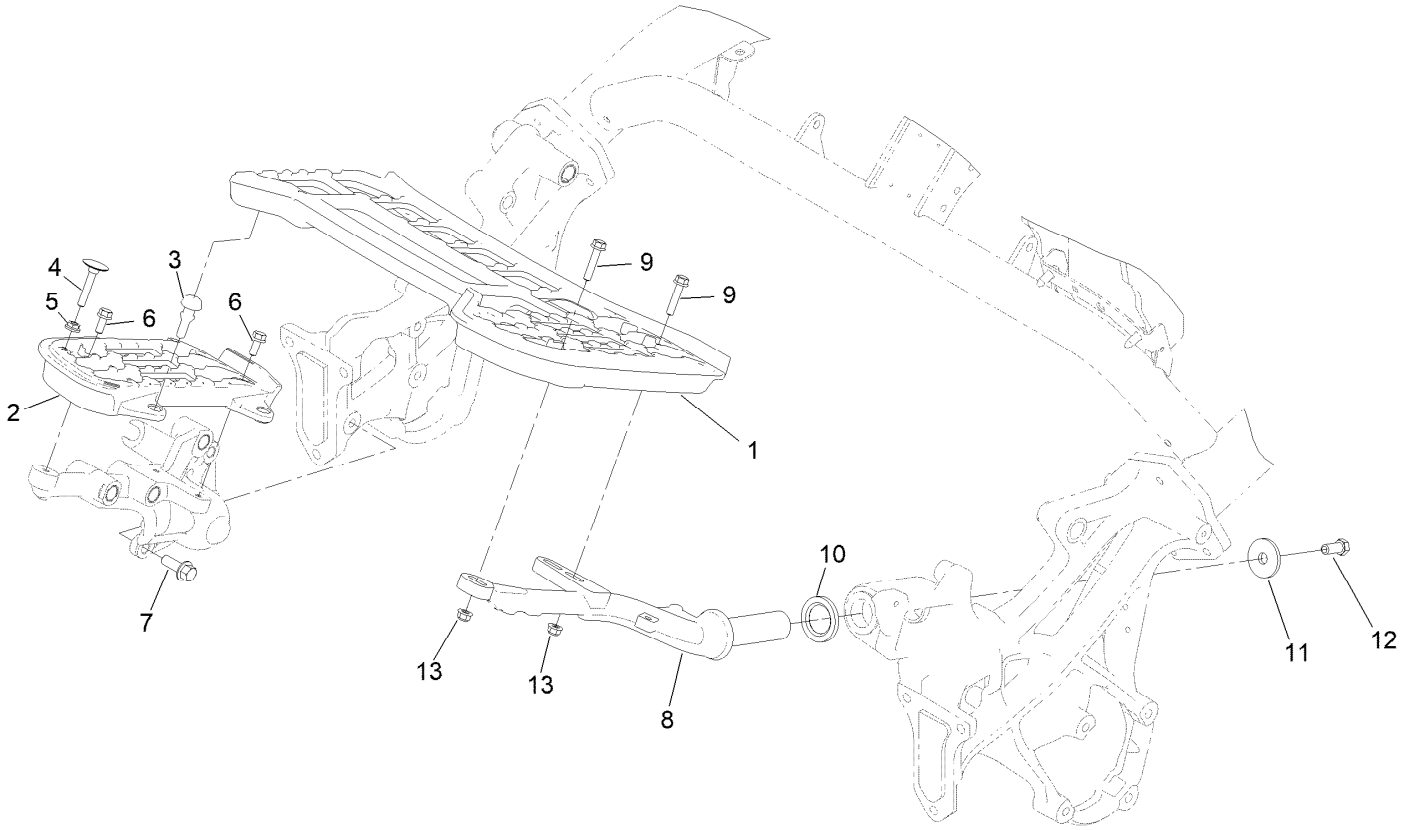

Platform Assembly

Ref.	*Part Number*	*Qty.*	*Description*
1	137-7768	1	Platform-LH
2	117-9008	1	Platform-RH
3	117-9072	2	Bumper-Rubber
4	115-8240	1	Screw-Elevator
5	32128-20	1	Nut-HF
6	3234-47	3	Screw-HHF
7	117-9035	3	Screw-HHF
8	139-8575-01	1	Support-Platform, LH (Mach)
9	115-1794	3	Screw-HHF
10	94-8946	1	Washer-Thrust
11	84-1560	1	Washer-Thrust
12	324-4	1	Screw-HH
13	104-8300	3	Nut-HF, NI

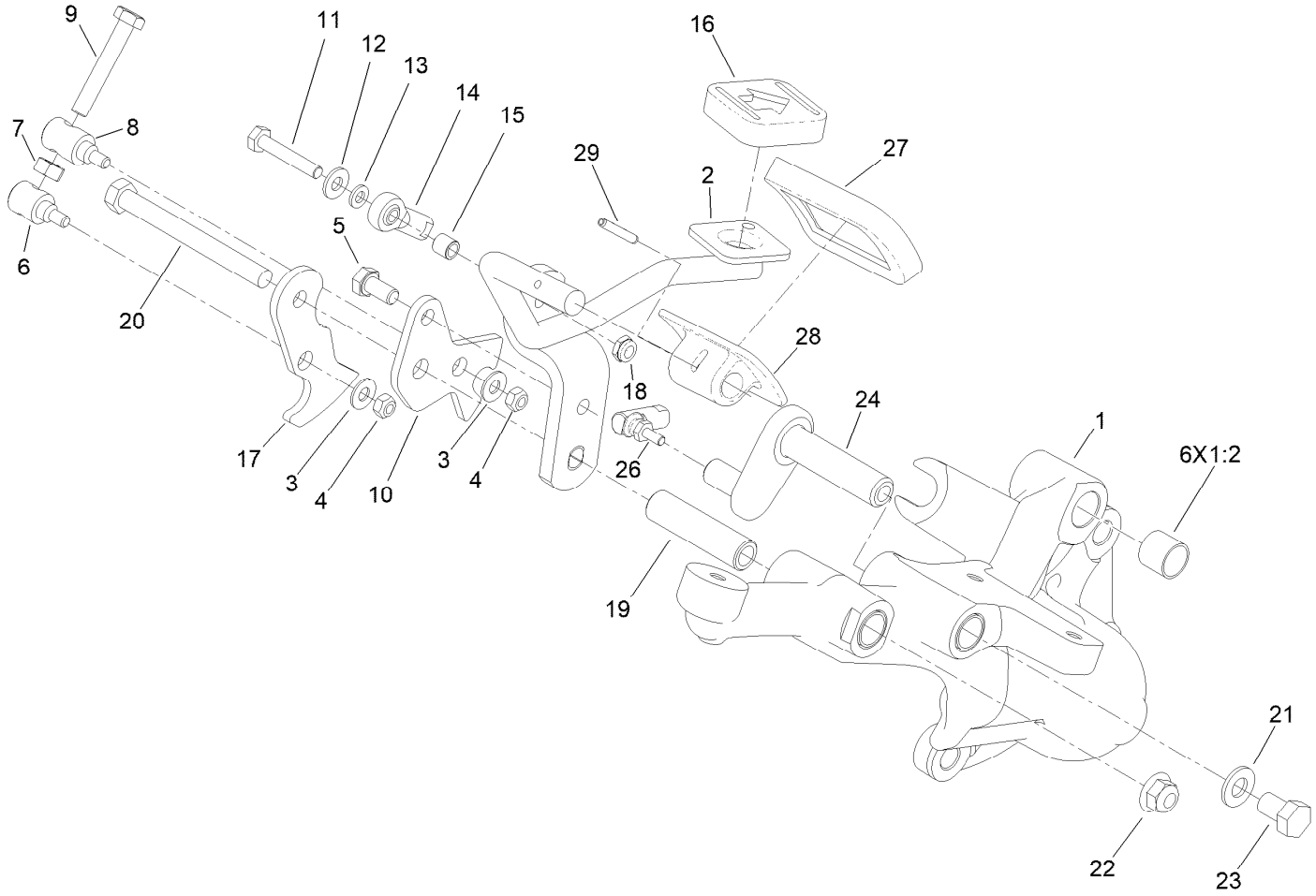

Right Hand Support Platform Assembly

Ref.	Part Number	Qty.	Description
1	133-2313	1	Support-Platform, RH
1:2	256-311	6	Bushing-Split
2	119-1725-01	1	Rod-Traction
3	3256-1	2	Washer-Flat
4	33023-00	2	Nut-Lock
5	33114-016	1	Screw-HH
6	94-1374	1	Trunnion-Bracket, Mow
7	33014-00	1	Nut-Hex
8	94-1375	1	Trunnion-Bracket, Lock
9	94-3489	1	Screw-HH
10	117-9021	1	Bracket-Lock
11	321-9	1	Screw-HH
12	3256-22	1	Washer-Flat
13	33093-00	1	Washer-Flat
14	2411-41	1	Rod End-Ball Joint
15	99-3545	1	Spacer
16	74-9110	1	Pad-Pedal, Reverse
17	140-5246	1	Bracket-Mow
18	3296-56	1	Nut-Lock, NI
19	94-1371	1	Spacer
20	323-42	1	Screw-HH
21	3256-24	1	Washer-Plain
22	104-8301	1	Nut-HF, NI
23	33115-016	1	Screw-HH
24	140-6108	1	Pin-Flag, Neutral Lock
26	2411-38	1	Joint-Ball
27	74-9100	1	Pad-Pedal, Forward
28	117-9507	1	Pedal-Accelerator
29	32121-45	1	Pin-Spring

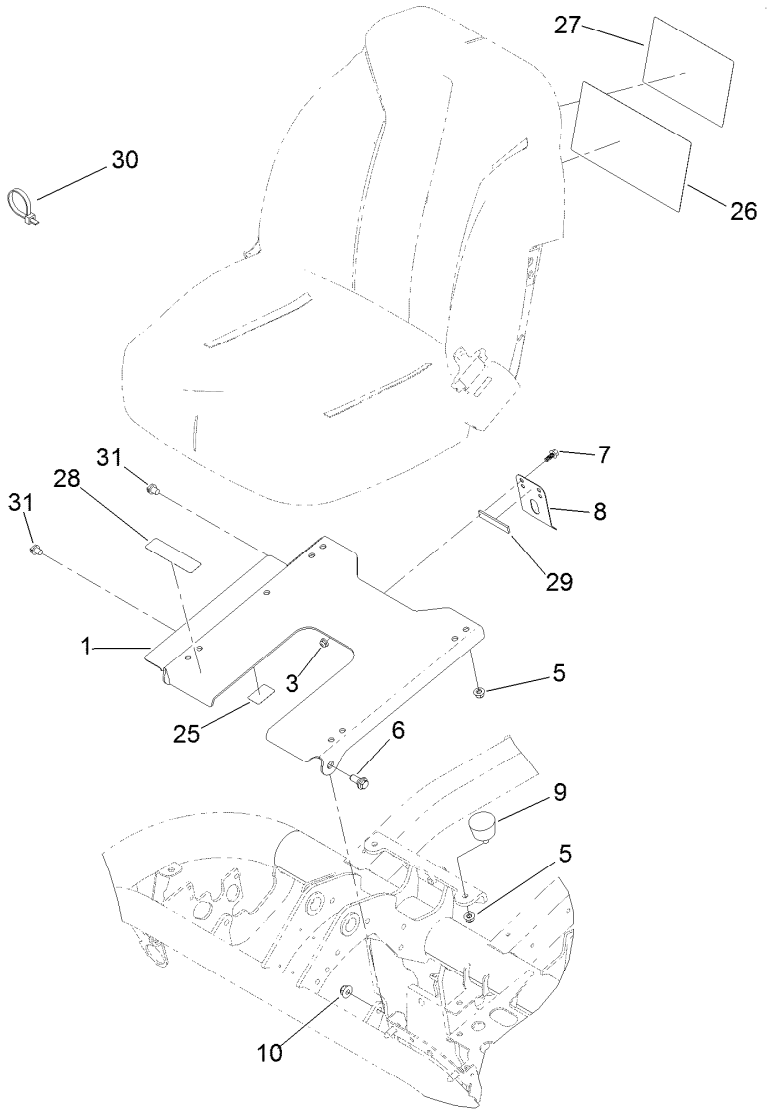

Seatbase Assembly

Ref.	Part Number	Qty.	Description
1	136-8405-03	1	Plate-Seat
3	104-7201	2	Nut-HF, NI
5	104-8300	2	Nut-HF, NI
6	94-7582	2	Bolt-Shoulder
7	99-6810	2	Screw-HHF
8	66-2630	1	Latch-Seat
9	68-3270	2	Bumper-Rubber
10	104-8301	2	Nut-HF, NI
25	115-8203	1	Decal-Reference, Fuse (Radiator Fan)
26	115-8170	1	Decal-Service, Spanish
26	115-8171	1	Decal-Service, French
26	115-8172	1	Decal-Service, German
26	115-8173	2	Decal, Service, Swedish
26	115-8174	1	Decal-Service, Italian
26	115-8175	1	Decal-Service, Portuguese
26	115-8176	1	Decal-Service, Norwegian
26	115-8177	1	Decal-Service, Finnish
26	115-8178	1	Decal-Service, Danish
26	115-8179	1	Decal-Service, Dutch
26	115-8180	1	Decal-Service, Japanese
26	139-2728	1	Decal-Service, English
27	115-8156	1	Decal-Speed, Clip
28	133-8062	1	Decal-Spark Arrestor
29	120-5753	1	Strip-Foam
30	3290-379	2	Tie-Cable
31	32180-030	2	Clip-Tie

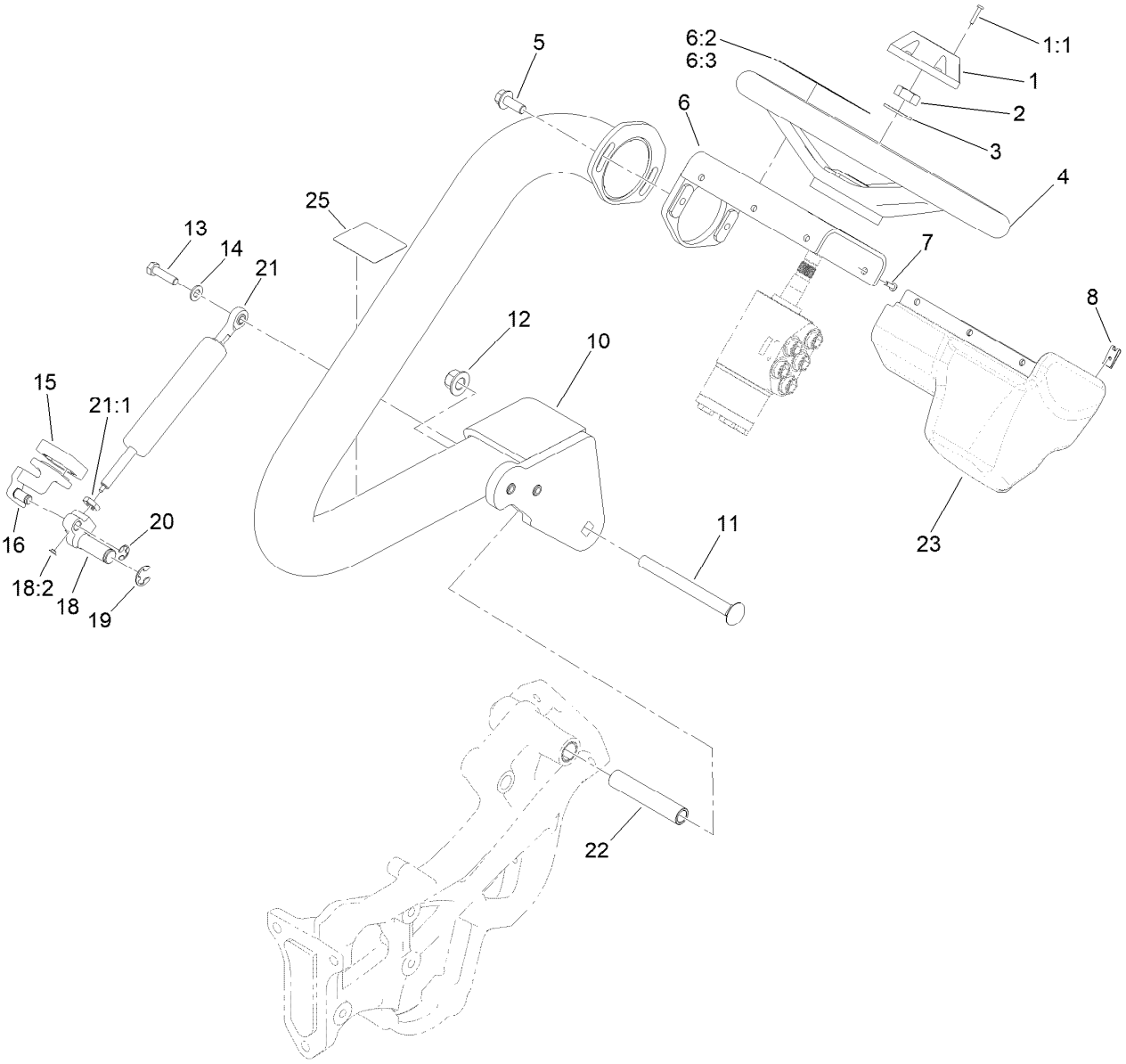

Steering Arm and Adjuster Assembly

Ref.	Part Number	Qty.	Description
1	68-5140	1	Cap-Wheel, Steering
1:1	32144-21	1	Screw
2	3296-33	1	Nut-Lock, NI
3	3256-27	1	Washer-Flat
4	145-0051	1	Steering Wheel
5	3234-42	2	Screw-HHF
6	136-8571	1	Mount-Steering
6:2	136-8506	1	Decal-Danger
6:3	136-8505	1	Decal-Danger, CE
7	3274-39	6	Screw-HSBH
8	3290-277	6	Nut-Speed
10	145-0093-01	1	Steering Arm ASM [red]
11	140-7029	1	Screw-CARR
12	99-5107	1	Nut-HF Nylock

Ref.	Part Number	Qty.	Description
13	322-5	1	Screw-HH
14	3256-23	1	Washer-Plain
15	74-9110	1	Pad-Pedal, Reverse
16	138-6456	1	Lever (Mach)
18	133-9030	1	Pivot Lever ASM
18:2	133-8995	1	Bushing
19	32120-19	1	E-Ring
20	105-7004	1	E-Ring
21	133-9036	1	Cylinder-Gas
21:1	112-8617	1	Nut-Hex
22	117-9002	1	Spacer
23	119-9300	1	Cover-Valve, Steering
25	119-9346	1	Decal-Arm, Steering

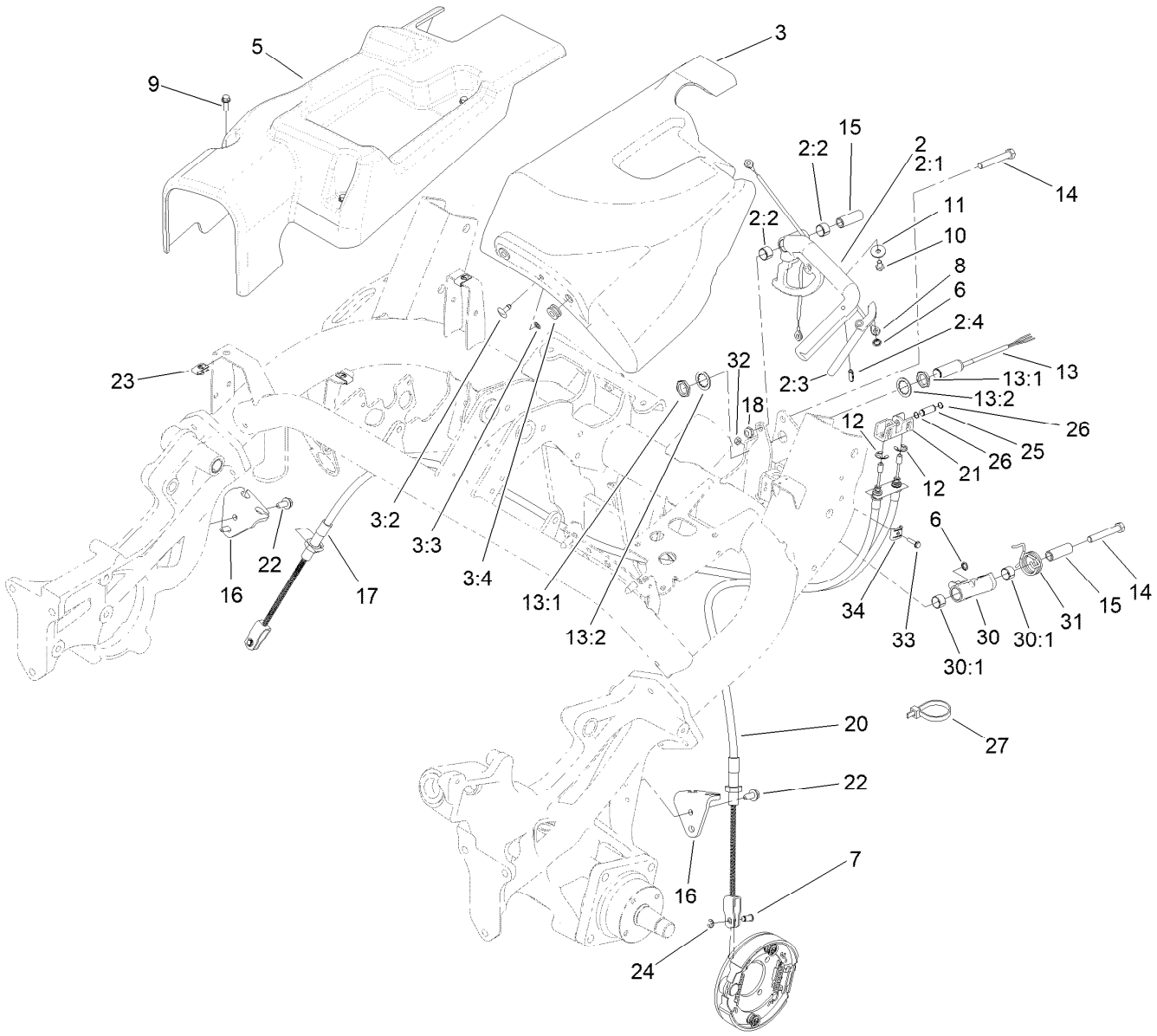

Brake Cable and Lever Assembly

Ref.	Part Number	Qty.	Description
2	140-6217	1	Hand Brake Lever Assembly
2:1	131-3024	1	Lever-Brake, Hand
2:2	1-653600	2	Bushing
2:3	131-3003	1	Lever-Release
2:4	32121-24	1	Pin-Spring
3	131-3025	1	LH Cover ASM
3:2	119-1728	1	Stud-1/4 Turn
3:3	119-1729	1	Retainer-Stud
3:4	92-5972	2	Grommet-Rubber
5	138-5029	1	Cover-Side, RH
6	104-8310	2	Ring-Retaining
7	109-6887	2	Pin-Clevis
8	131-3004	1	Cable
9	115-5103	3	Screw-HHF
10	321-2	1	Screw-HH
11	3256-67	1	Washer
12	32120-47	2	Ring-Retaining, External
13	115-5300	1	Proximity Switch ASM
13:1	117-3207	2	Nut-Hex
13:2	117-3208	2	Washer-Lock, Internal Tooth

Ref.	Part Number	Qty.	Description
14	323-12	2	Screw-HH
15	131-3017	2	Spacer
16	133-8901	2	Bracket-Cable, Brake
17	131-1833	1	Cable-Brake, RH
18	3296-59	2	Nut-Lock, NI
20	131-1834	1	Cable-Brake, LH
21	131-3065	1	Equalizer-Cable
22	32104-32	4	Screw-HWH
23	107069	3	Clip
24	701197	2	E-Ring
25	131-3021	1	Pin
26	32120-46	2	Ring-Retaining
27	3290-379	1	Tie-Cable
30	137-1659	1	Brake Pawl ASM
30:1	1-653600	2	Bushing
31	132-3833	1	Spring-Torsion
32	3296-2	1	Nut-Lock, NI
33	3290-126	1	Screw-HWH
34	81-1690	1	Clamp-Cable

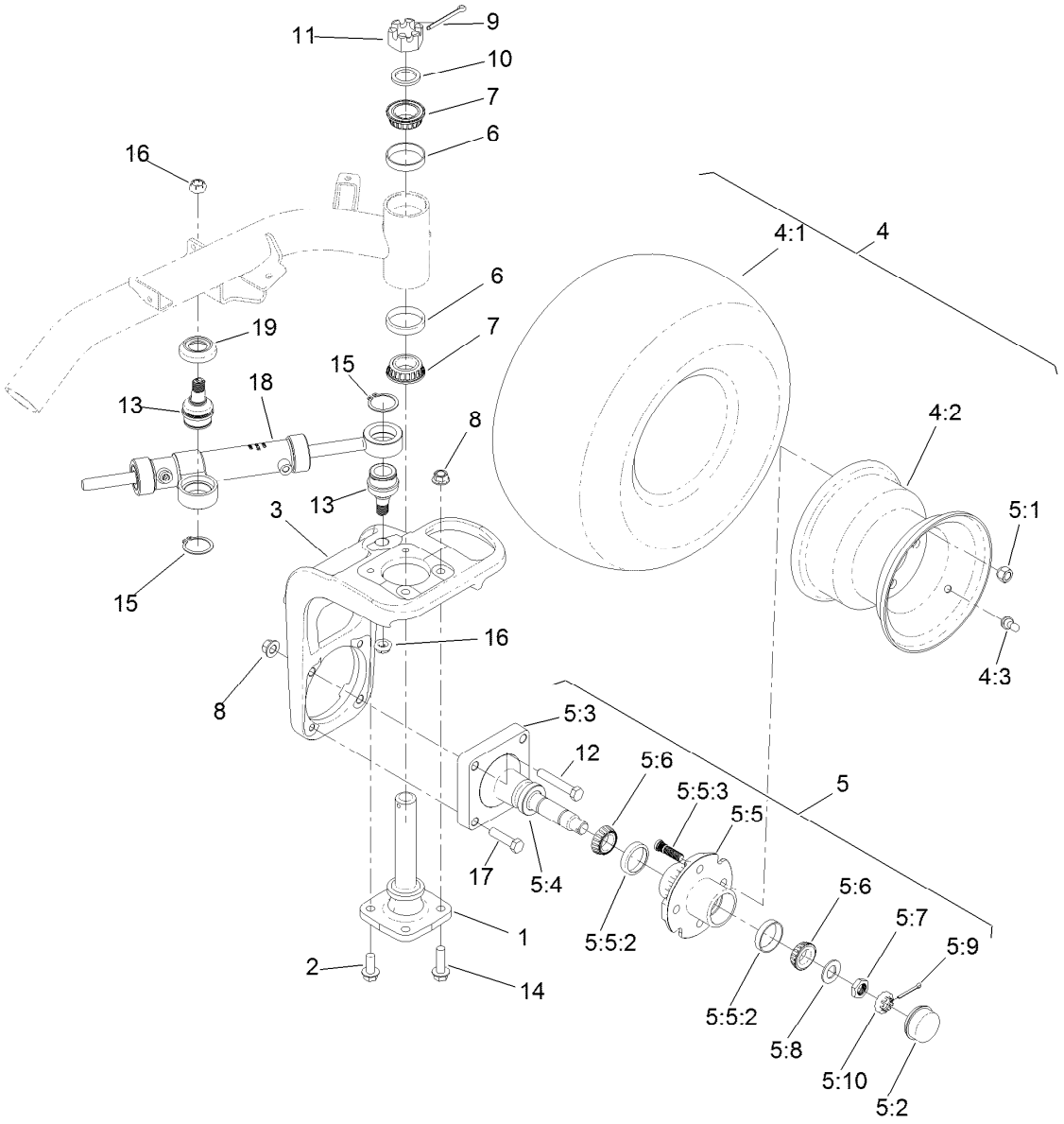

Back Wheel Assembly

Ref.	Part Number	Qty.	Description
1	115-2657	1	Spindle-Steering
2	3234-38	2	Screw-HHF
3	117-4366-01	1	Base-Fork, Rear
4	117-9033	1	Wheel And Tire ASM
4:1	120-2783	1	Tire
4:2	217-60	1	Rim
4:3	232-27	1	Stem-Valve
5	119-4490	1	Wheel Spindle ASM
5:1	242-50	4	Nut-Lug
5:2	241-119	1	Cap-Dust
5:3	112-7173	1	Spindle
5:4	112-1690	1	Seal-Oil
5:5	117-9093	1	Hub ASM
5:5:2	254-72	2	Bearing-Cup, Tapered
5:5:3	114-3918	4	Stud-Wheel
5:6	254-92	2	Cone-Bearing, Outer
5:7	117-8260	1	Nut

Ref.	Part Number	Qty.	Description
5:8	117-8259	1	Washer-Spindle
5:9	3272-18	1	Pin-Cotter
5:10	93-0307	1	Nut-Lock, Retainer
6	115-9471	2	Bearing-Cup
7	115-9472	2	Bearing-Cone And Seal
8	99-5107	4	Nut-HF Nylock
9	3272-37	1	Pin-Cotter
10	18-6320	1	Washer
11	32136-9	1	Nut-Hex, Slotted
12	325-12	2	Screw-HH
13	121-3605	2	Ball Joint
14	3234-22	2	Screw-HHF
15	32151-104	2	Ring-Retaining, External
16	121-3611	2	Nut-Hex, Flextop
17	325-8	2	Screw-HH
18	117-4480	1	HYD Cylinder ASM
19	120-2026	1	Spacer-Cylinder

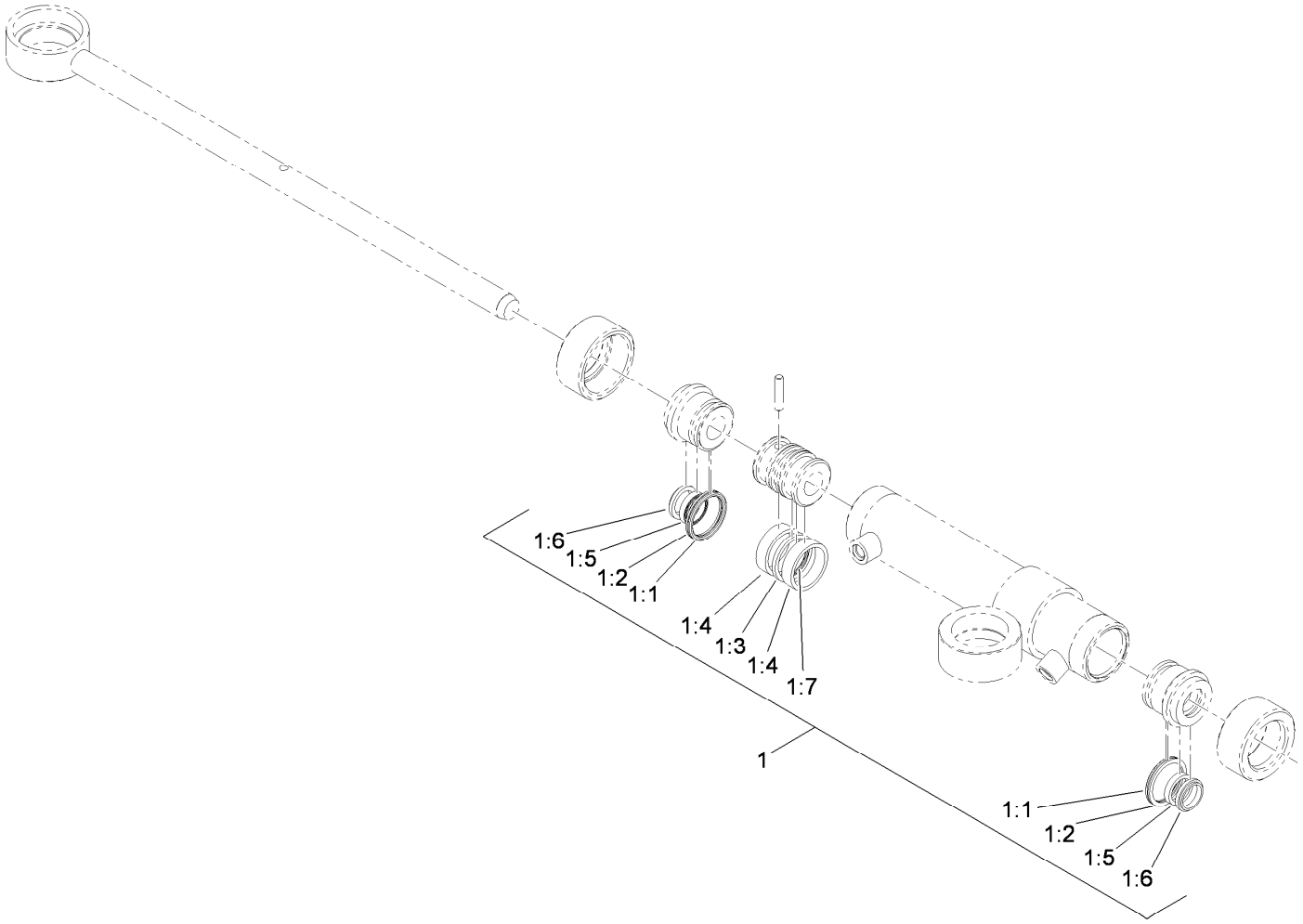

Hydraulic Cylinder Assembly No. 117-4480

Ref.	*Part Number*	*Qty.*	*Description*
1	119-7124	1	Kit-Seal
1:1		2	O-Ring ●
1:2		2	Ring-Backup ●
1:3		1	Seal-Psp ●
1:4		2	Ring-Wear ●
1:5		2	Seal-Bs ●
1:6		2	Seal-Dust ●
1:7		1	O-Ring ●

● Not serviced separately

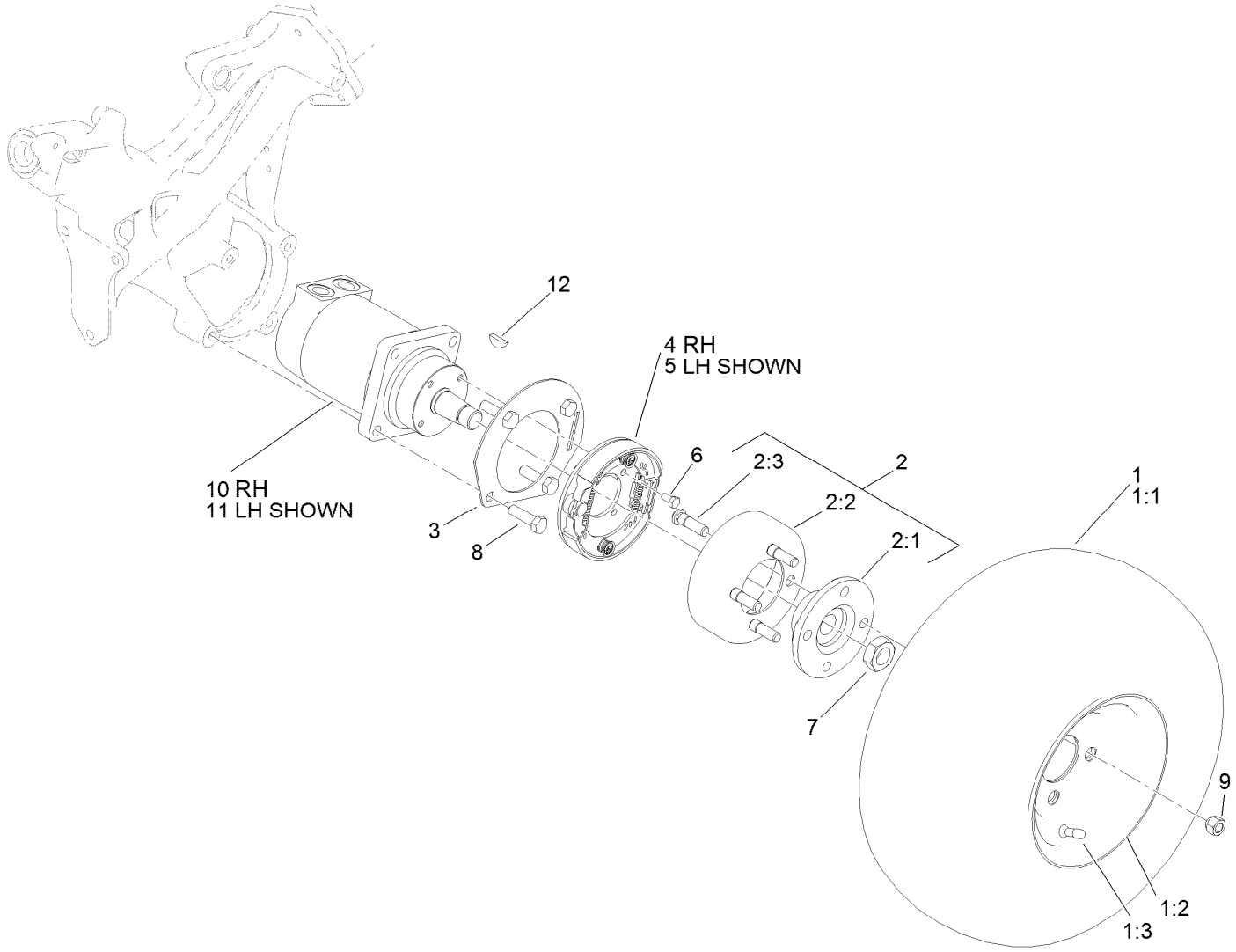

Front Wheel Assembly

Ref.	*Part Number*	*Qty.*	*Description*
1	117-9030	2	Wheel And Tire ASM
1:1	120-2783	1	Tire
1:2	117-9032	1	Rim
1:3	232-27	1	Stem-Valve
2	115-2661	2	Brake Drum ASM
2:1	115-2662-0P	1	Hub-Wheel [primed]
2:2	115-2663	1	Drum-Brake
2:3	85-6540	4	Stud-Drive
3	114-9998-03	2	Tab-Lever, Brake

Ref.	*Part Number*	*Qty.*	*Description*
4	139-2722	1	RH Brake ASM
5	139-2721	1	LH Brake ASM
6	322-2	8	Screw-HH
7	26-3790	2	Nut-Lock
8	325-7	8	Screw-HH
9	242-50	8	Nut-Lug
10	117-4302	1	RH Wheel Motor ASM
11	117-4303	1	LH Wheel Motor ASM
12	3257-42	1	Key-Woodruff

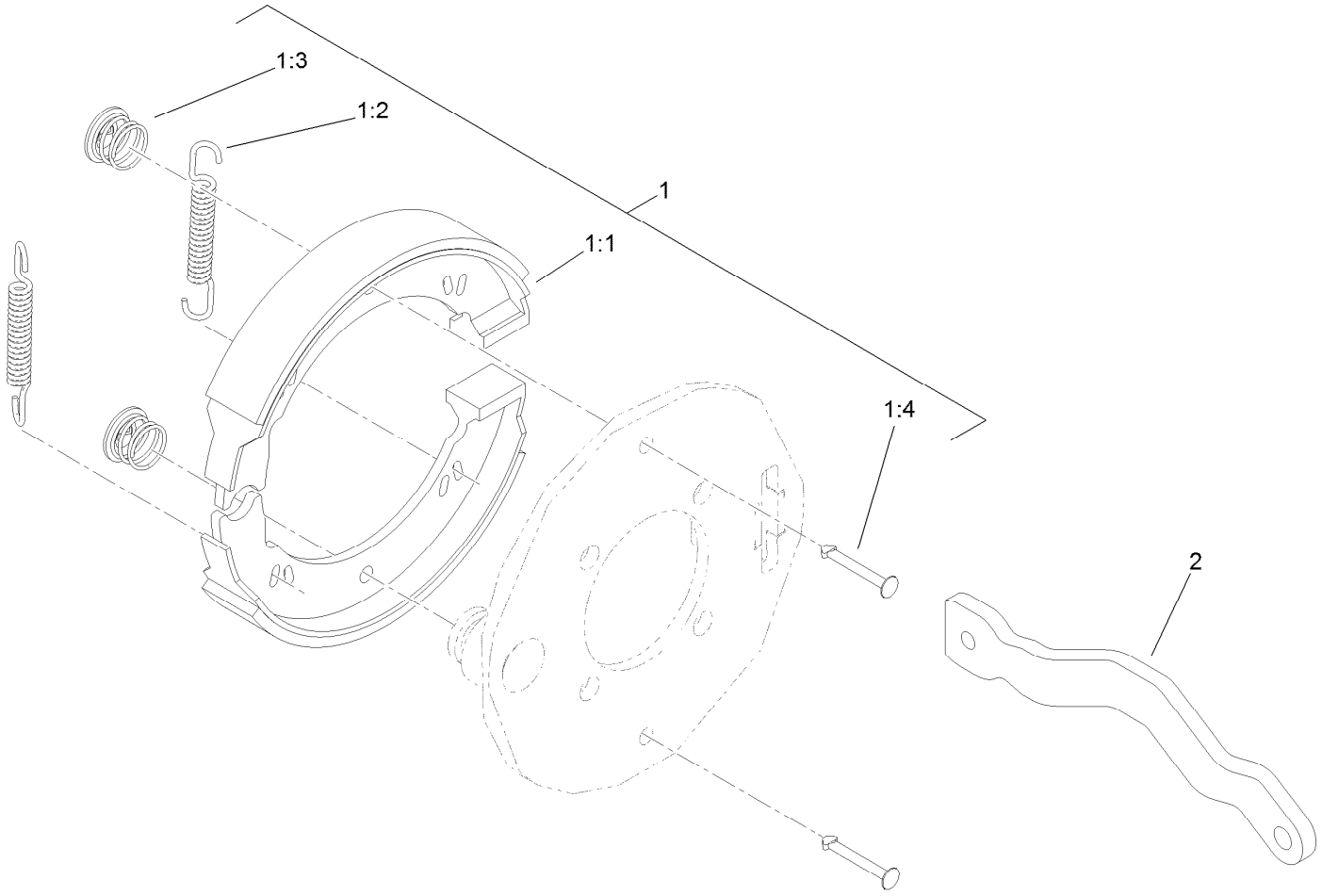

Right Hand Brake Assembly No. 139-2722

Ref.	*Part Number*	*Qty.*	*Description*
1	139-2723	1	Kit-Brake
1:1		2	Shoe-Brake ●
1:2		2	Spring ●
1:3		2	Clip ●
1:4		2	Pin-Retainer ●
2	115-5789	1	Lever-Brake, RH

● Not serviced separately

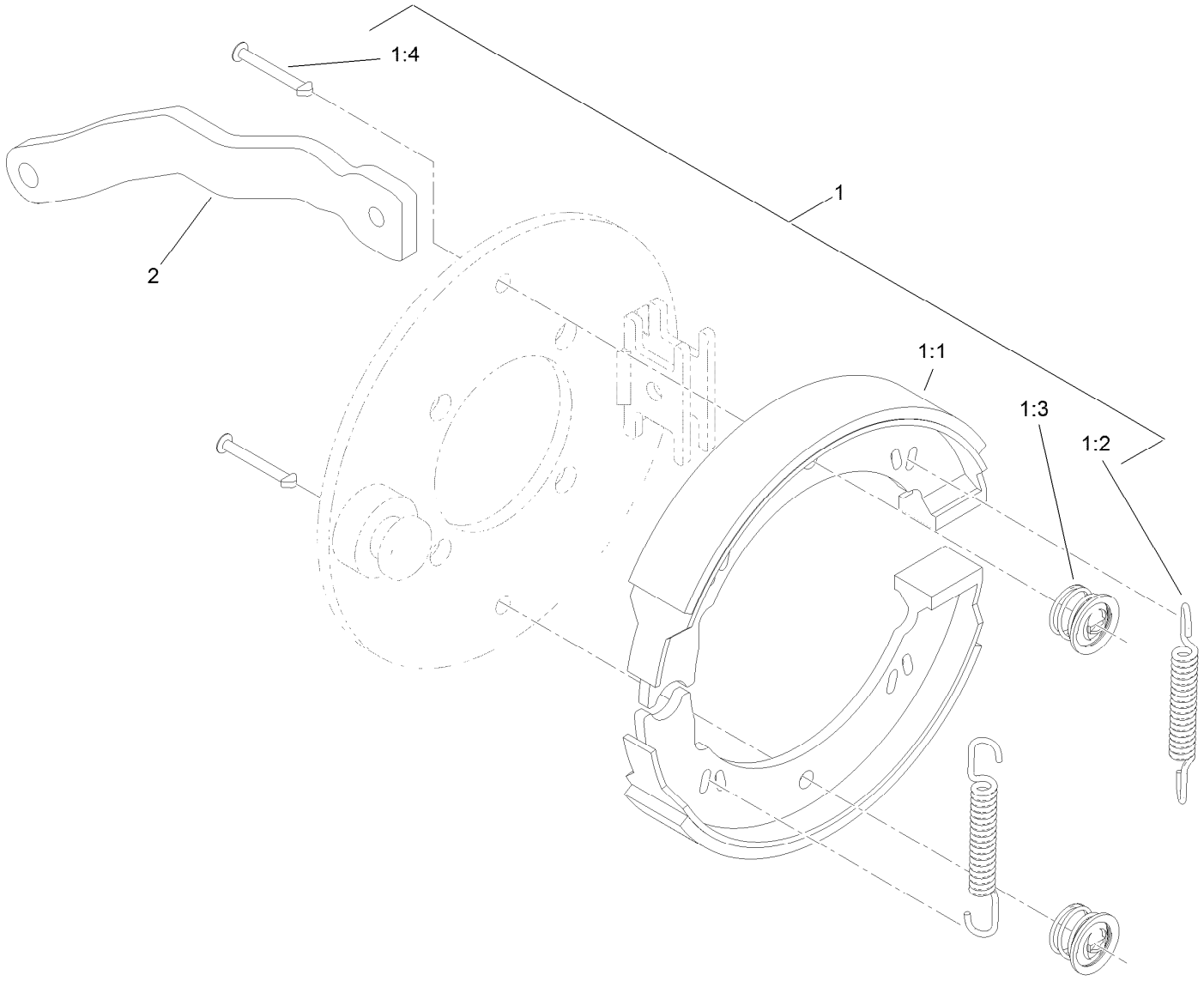

Left Hand Brake Assembly No. 139-2721

Ref.	*Part Number*	*Qty.*	*Description*
1	139-2723	1	Kit-Brake
1:1		2	Shoe-Brake ●
1:2		2	Spring ●
1:3		2	Clip ●
1:4		2	Pin-Retainer ●
2	115-2664	1	Lever-Brake, LH

● Not serviced separately

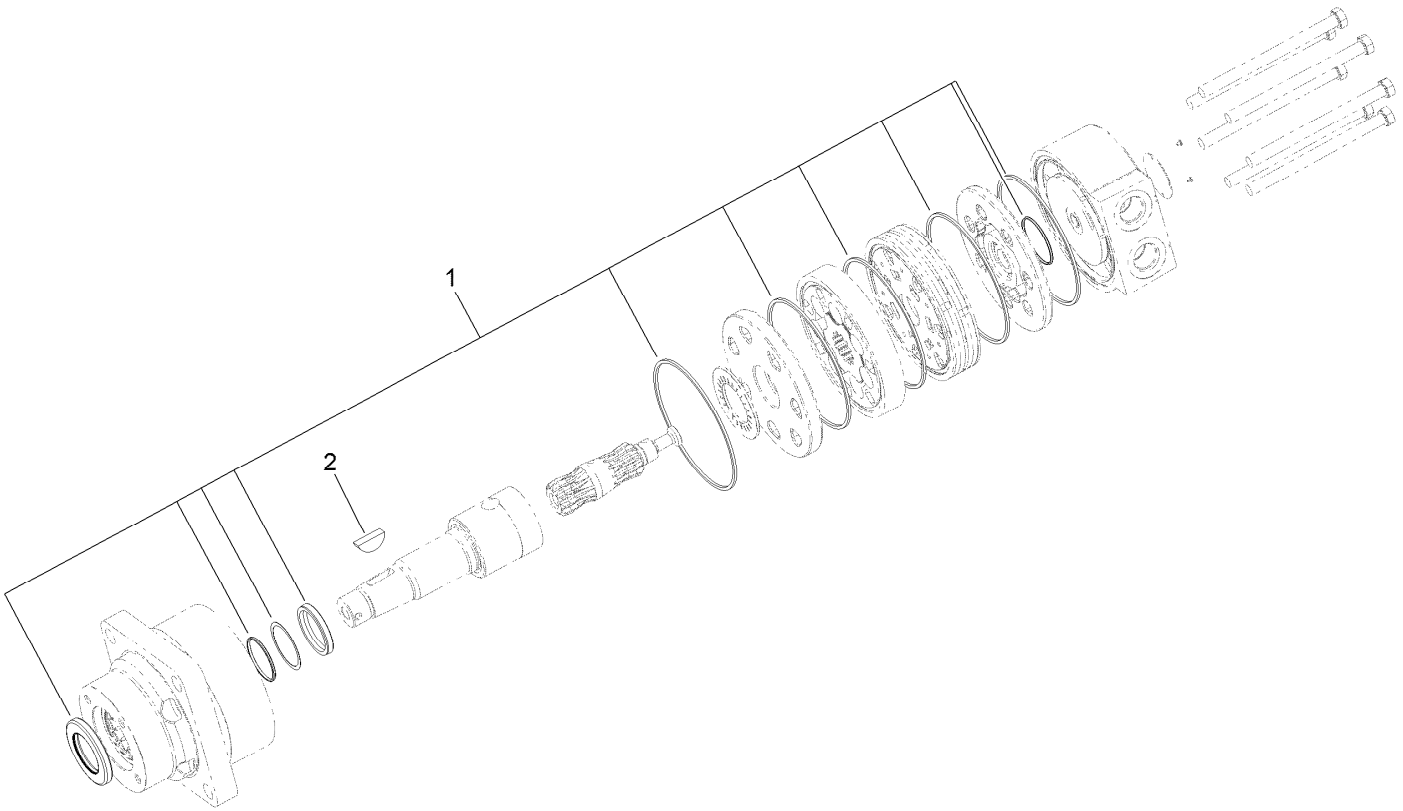

Right Hand Wheel Motor Assembly No. 117-4302

Ref.	*Part Number*	*Qty.*	*Description*
1	94-8178	1	Seal Kit
2	3257-42	1	Key-Woodruff

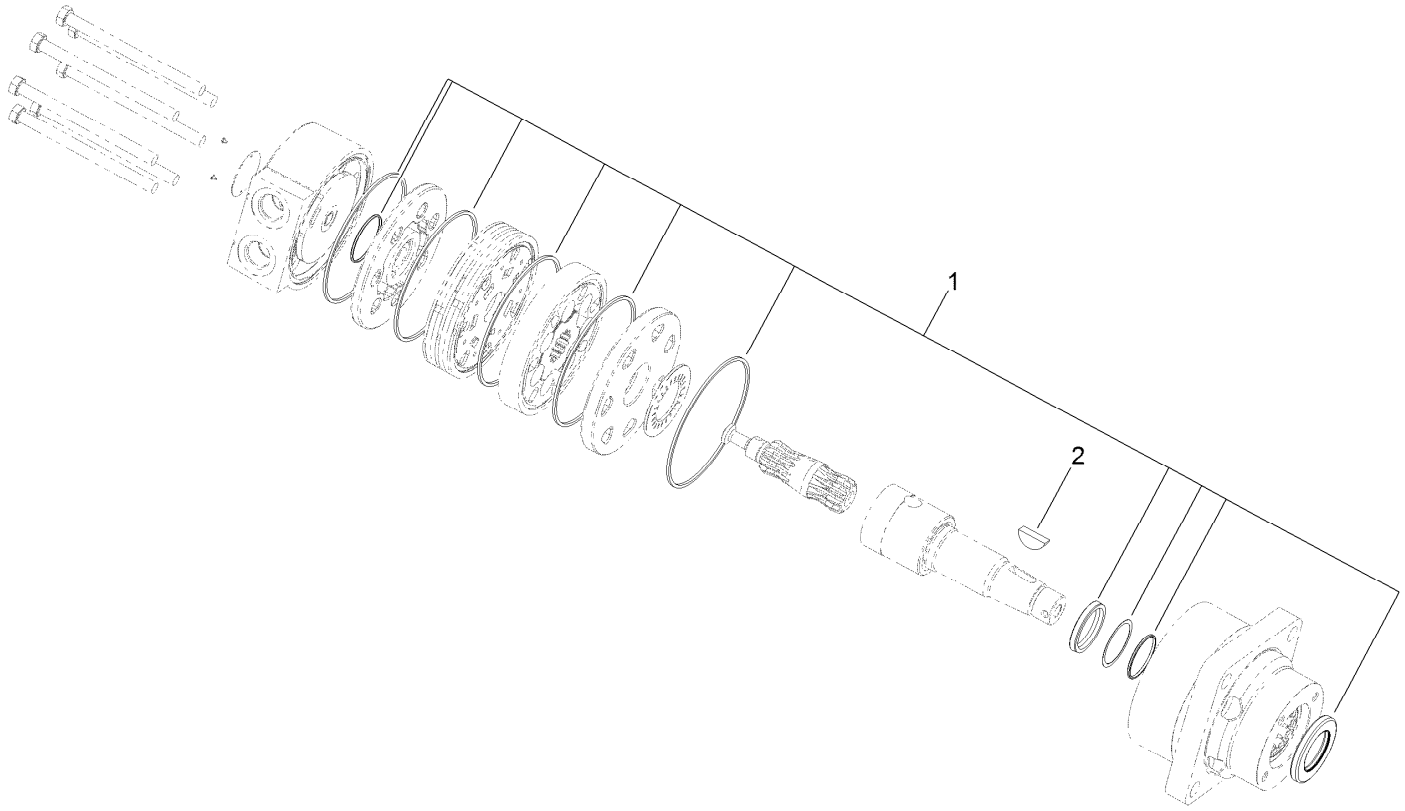

Left Hand Wheel Motor Assembly No. 117-4303

Ref.	*Part Number*	*Qty.*	*Description*
1	94-8178	1	Seal Kit
2	3257-42	1	Key-Woodruff

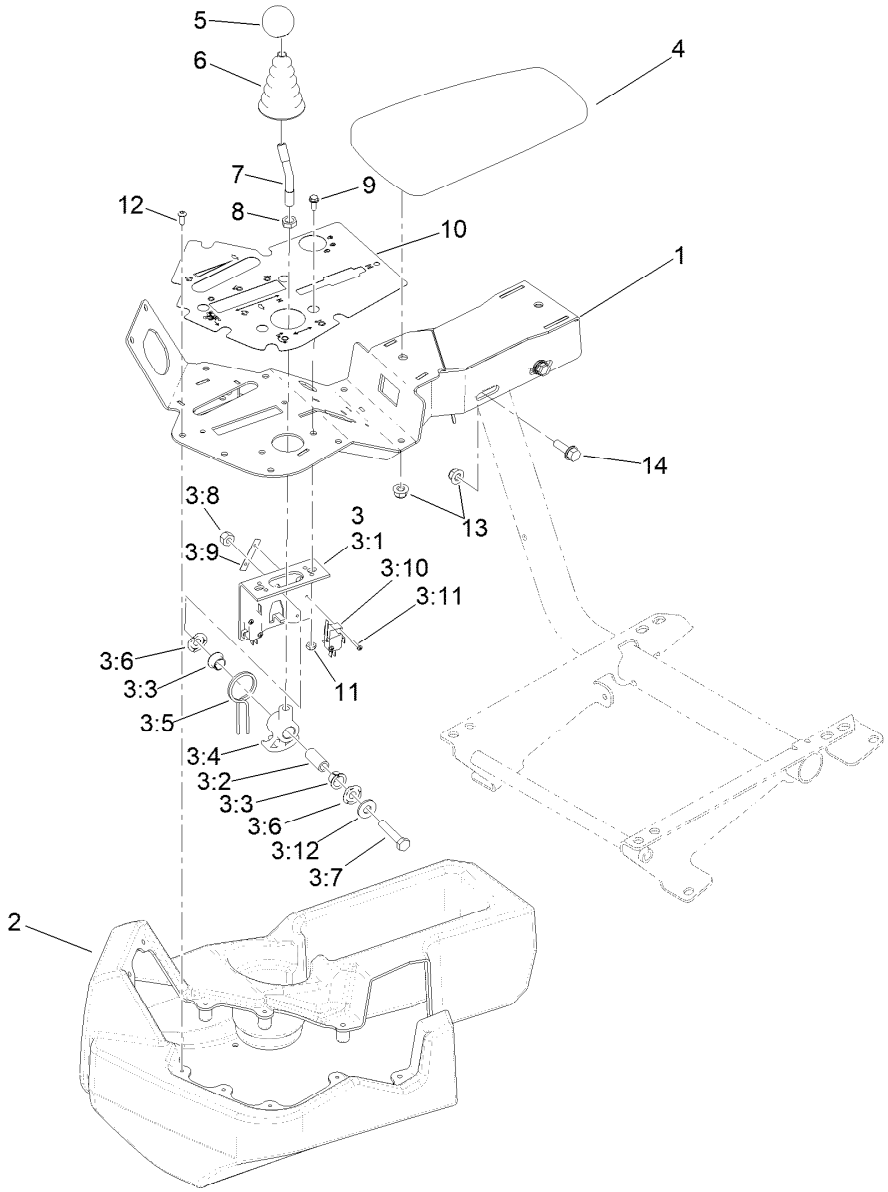

Console and Reel Control Assembly

Ref.	Part Number	Qty.	Description
1	140-5245-03	1	Console ASM [black]
2	132-9955	1	Cover-Console
3	106-4167	1	Joystick Bracket ASM
3:1	115-5357-03	1	Bracket-Joystick
3:2	106-4192	1	Spacer
3:3	93-5547	2	Bushing-Nylon
3:4	147-3050	1	Hub-Pivot, Joystick
3:5	105-8289	1	Spring-Torsion
3:6	106-4193	2	Washer-Finger, Spring
3:7	322-9	1	Screw-HH
3:8	3296-29	1	Nut-Lock, NI
3:9	3290-354	2	Nut-Speed
3:10	108-6496	2	Switch (W/Boot)
3:11	95-3003	4	Screw-PPHTF
3:12	3256-3	1	Washer-Flat
4	108-7602	1	Rest-Arm
5	120-9752	1	Knob-Round, Yellow
6	93-5961	1	Boot-Lever
7	121-6681	1	Stem-Joystick
8	3218-3	1	Nut-Jam
9	3290-321	2	Screw-HWH
10	139-6493	1	Decal-Console
11	3296-12	2	Nut-Lock, NI
12	115-9830	8	Screw-HSBH
13	104-8300	4	Nut-HF, NI
14	3234-29	2	Screw-HHF

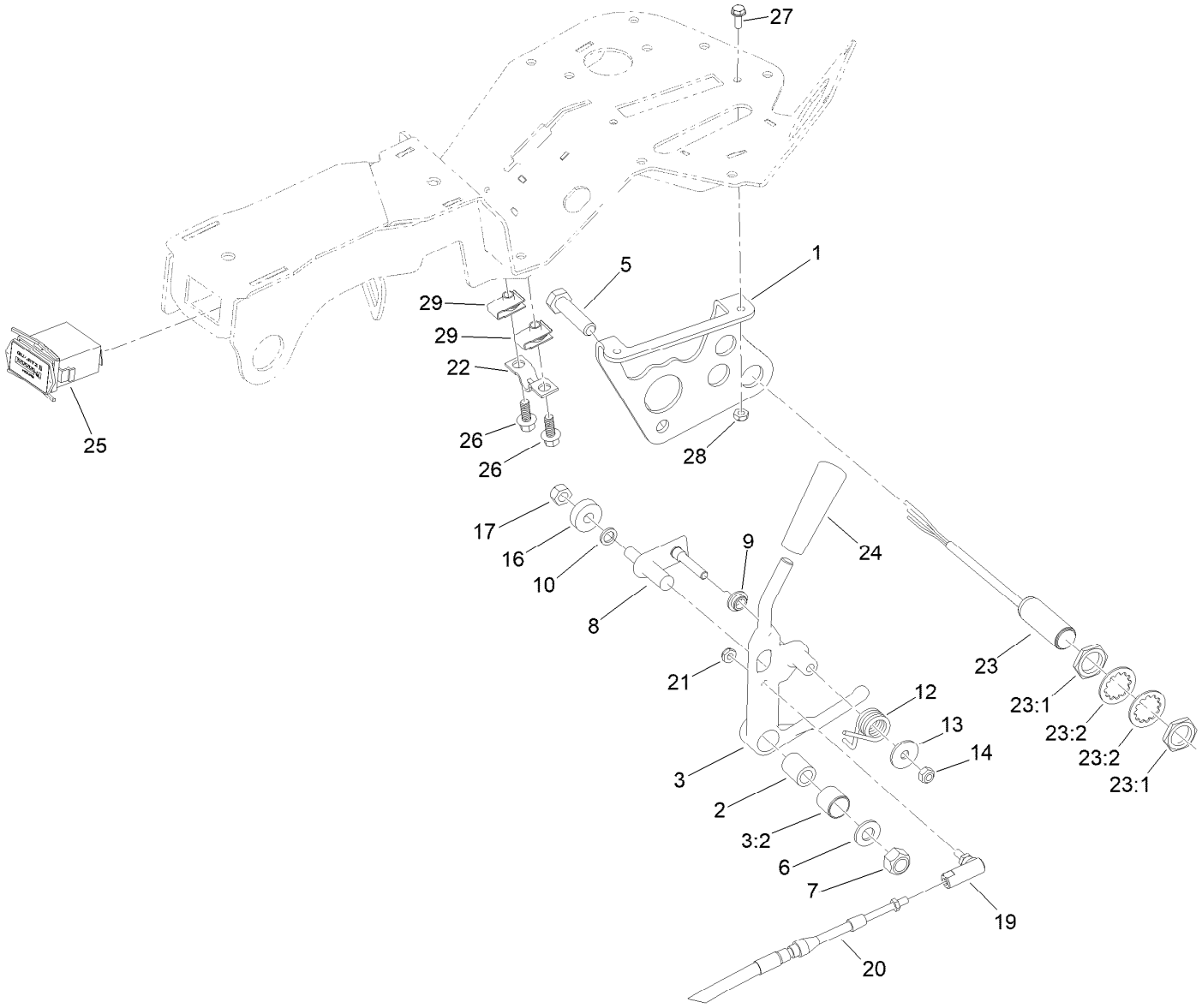

Traction Interface Control Assembly

Ref.	Part Number	Qty.	Description
1	132-3822-03	1	Bracket
2	94-1378	1	Tube-Pivot, Handle
3	145-0062	1	Handle ASM
3:2	136-8417	1	Bushing
5	33115-040	1	Screw-HH
6	3256-24	1	Washer-Plain
7	33025-00	1	Nut-Lock, NI
8	125-1928	1	Pin
9	94-9619	1	Bushing
10	75-5470	1	Spacer-Bearing
12	94-9620	1	Spring-Torsion
13	3256-67	1	Washer
14	33023-00	1	Nut-Lock
16	251-259	1	Bearing-Ball

Ref.	Part Number	Qty.	Description
17	33024-00	1	Nut-Lock, NI
19	2411-38	1	Joint-Ball
20	132-9544	1	Cable-Lock, Neutral
21	3296-27	1	Nut-Lock, NI
22	93-2279	1	Clamp-Cable
23	115-5300	2	Proximity Switch ASM
23:1	117-3207	2	Nut-Hex
23:2	117-3208	2	Washer-Lock, Internal Tooth
24	233-39	1	Knob-Control
25	120-2244	1	Hourmeter
26	99-6810	2	Screw-HHF
27	3290-321	2	Screw-HWH
28	3296-12	2	Nut-Lock, NI
29	107069	2	Clip

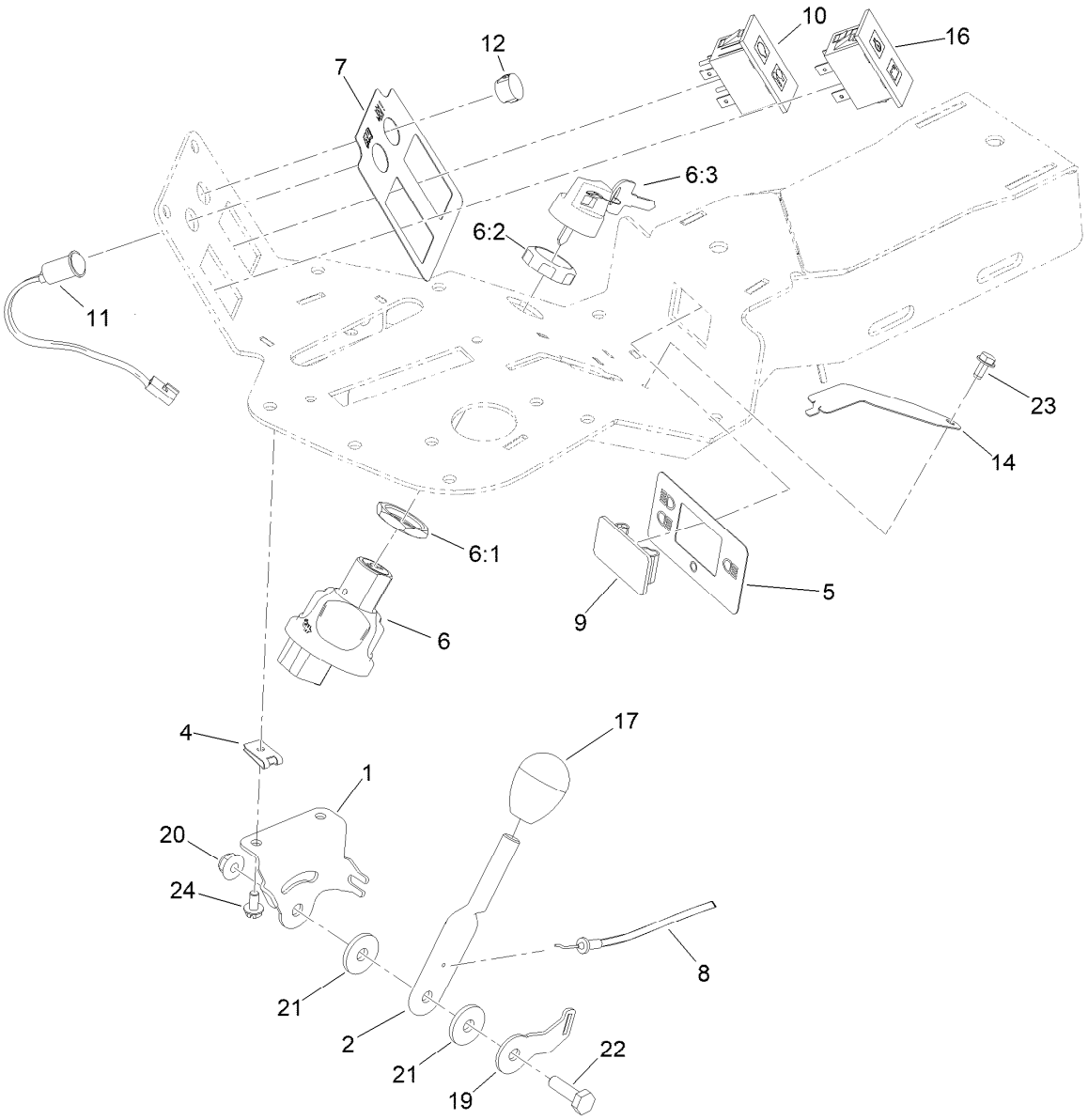

Ignition and Throttle Control Assembly

Ref.	*Part Number*	*Qty.*	*Description*
1	125-3013	1	Bracket-Throttle
2	125-3014	1	Lever-Throttle
4	3290-277	2	Nut-Speed
5	131-2046	1	Decal-Light, Console
6	121-5159	1	Switch-Ignition
6:1	121-5160	1	Nut-Hex
6:2	122-2704	1	Nut-Face, M22 (Plastic)
6:3	121-5162	1	Set-Key, Ignition
7	139-6492	1	Decal-Warning Lights
8	125-3017	1	Cable-Throttle
9	99-7420	1	Plug-Hole
10	100-8071	1	Lamp-Warning

Ref.	*Part Number*	*Qty.*	*Description*
11	140-5288	1	Light-Indicator
12	2410-64	1	Plug-Dome
14	140-5247	1	Cover-Choke
16	100-8070	1	Lamp-Warning
17	120-9751	1	Knob-Oval, Black
19	125-3015	1	Bracket-Clamp, Cable
20	104-7201	1	Nut-HF, NI
21	66-2921	2	Washer-Friction
22	321-5	1	Screw-HH
23	104-2065	1	Screw-HWH
24	3290-144	2	Screw-SHWH

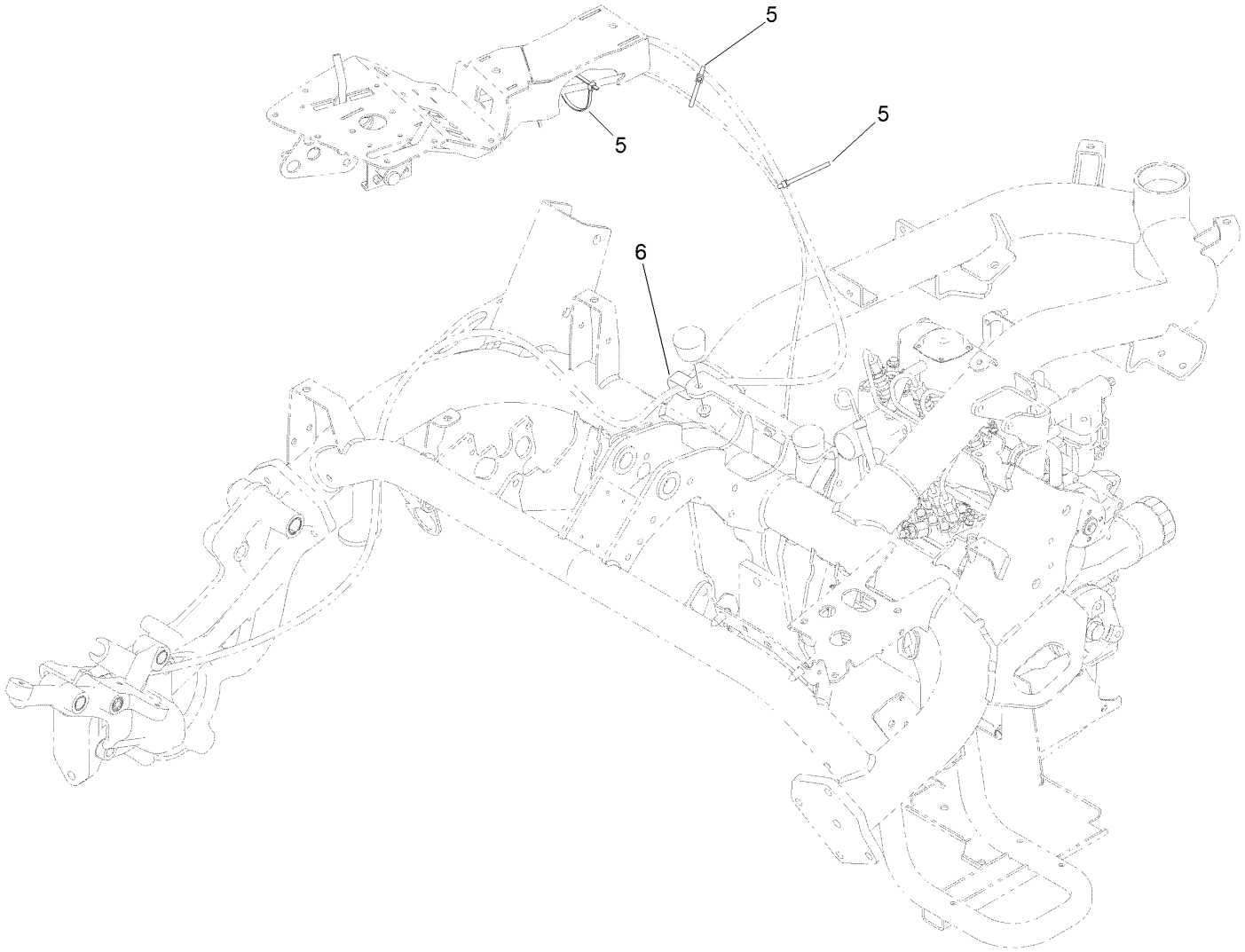

Console Cable Routing Assembly

Ref.	*Part Number*	*Qty.*	*Description*
5	3290-379	4	Tie-Cable
6	120-1959	1	Clamp

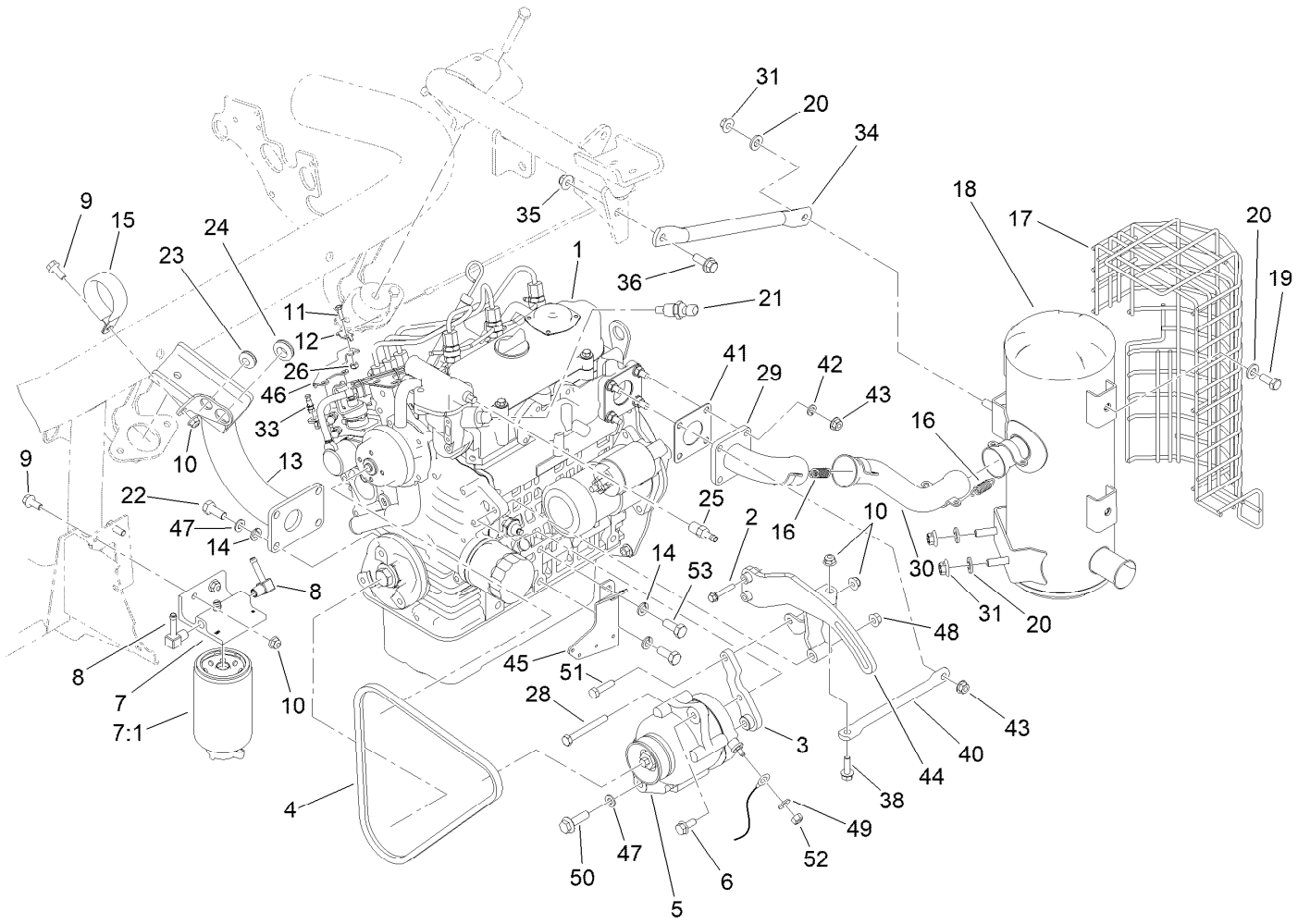

Engine and Exhaust Assembly

Ref.	Part Number	Qty.	Description
1	138-6902	1	Engine-Kubota, D902
2	33103-035	2	Screw-HHF
3	119-4428-0P	1	Alternator Brkt ASM [primed]
4	119-4486	1	Belt-V, Fan
5	117-5541	1	60 Amp Alternator ASM
6	33104-020	1	Screw-HHF
7	110-9044	1	Separator-Filter
7:1	110-9049	1	Filter-Spin On, Fuel/Water
8	353-707	2	Fitting-HYD, 90 DEG
9	3234-47	2	Screw-HHF
10	104-8300	5	Nut-HF, NI
11	3290-134	1	Screw
12	613385	1	Clamp-Cable
13	119-2128-03	1	Support-Engine
14	48-9590	6	Washer-Lock
15	115-9469	1	Clamp-R
16	104-6478	4	Spring-Extension
17	145-4559-03	1	Shield-Muffler
18	120-1950	1	Muffler
19	323-5	4	Screw-HH
20	100-4852	4	Washer-Hardened

Ref.	Part Number	Qty.	Description
21	119-4478	1	Sender-Temperature
22	43-0090	4	Screw-HH
23	1-633630	1	Grommet
24	237-124	2	Grommet
25	353-783	1	Fitting-STR
26	3296-2	1	Nut-Lock, NI
28	119-8194	1	Screw-HH
29	114-8009	1	Plate-Exhaust
30	114-8013	1	Pipe-Exhaust
31	32128-19	4	Nut-HF Lock,Large Flg
33	108-5928	1	Swivel-Stop, Cable
34	120-1956-03	1	Tube-Brace
35	104-8301	1	Nut-HF, NI
36	3234-42	1	Screw-HHF
38	3234-29	2	Screw-HHF
40	120-1961-03	1	Tube-Brace
41	99-8343	1	Gasket-Muffler
42	3253-4	3	Washer-Lock
43	117-1350	4	Nut-HF, Lock
44	119-8182-0P	1	Alt Brkt ASM, [primed]
45	120-1964-03	1	Bracket-Harness

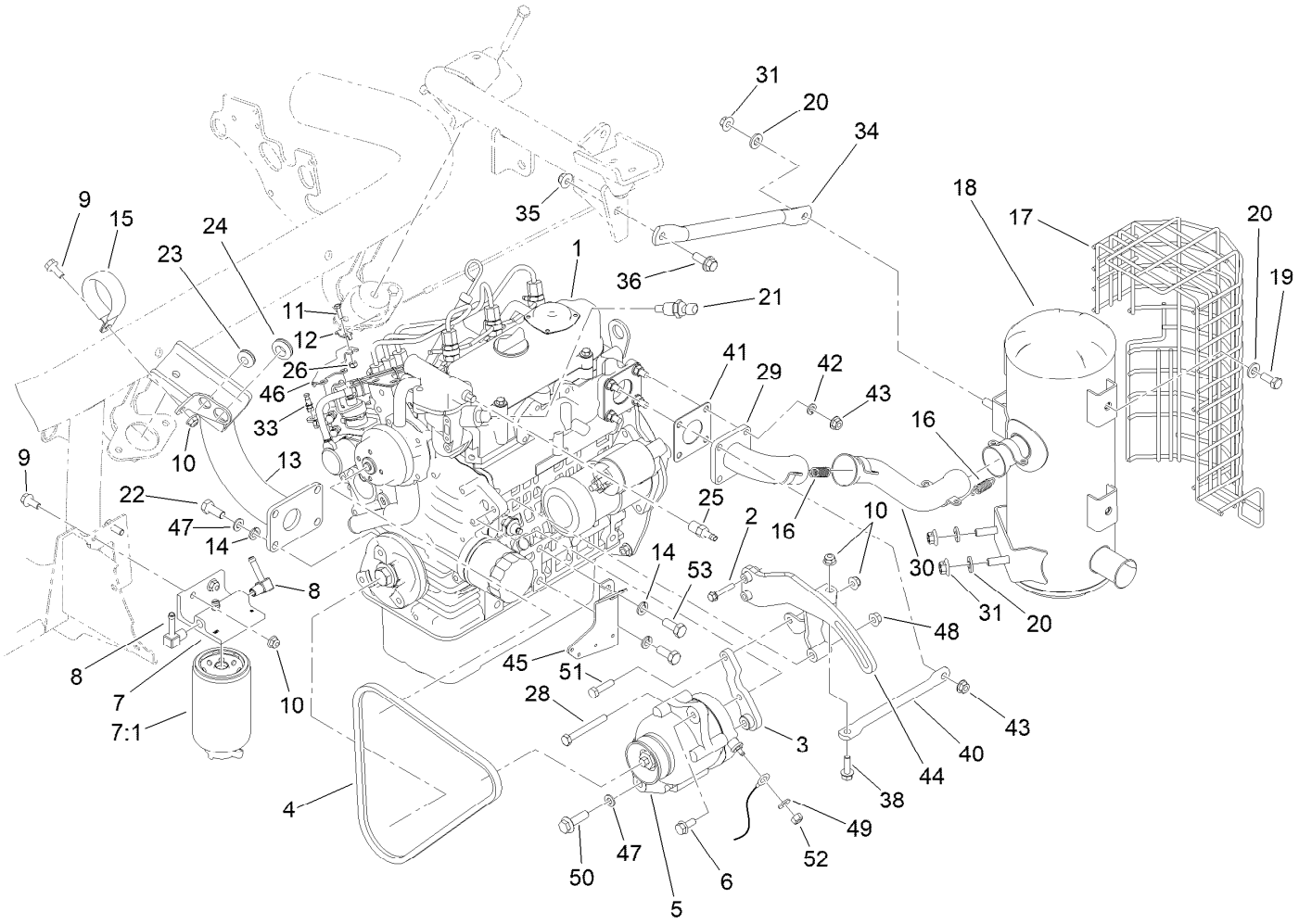

Engine and Exhaust Assembly (continued)

Ref.	Part Number	Qty.	Description
46	125-3016	1	Bracket-Support, Throttle
47	3256-23	2	Washer-Plain
48	33004-00	1	Nut-HF
49	3256-2	1	Washer-Flat
50	33105-035	1	Screw-HHF
51	322-6	1	Screw-HH
52	33013-00	1	Nut-Hex
53	63-7790	2	Screw-Cap

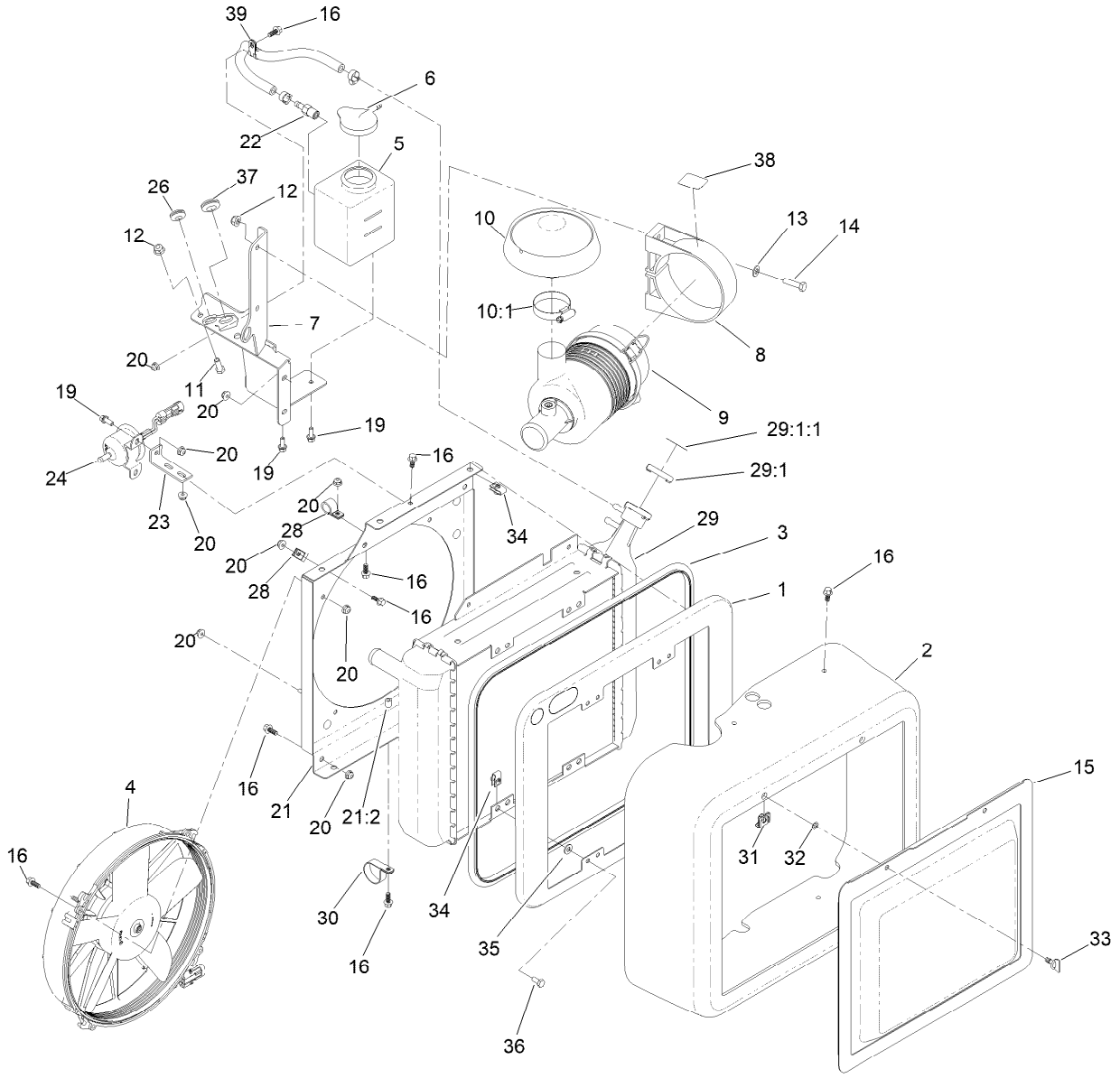

Radiator, Fuel Pump and Air Cleaner Assembly

Ref.	Part Number	Qty.	Description
1	117-9307-03	1	Panel-Seal, Radiator
2	117-9296	1	Shroud-Radiator
3	117-9308	1	Trim-Seal
4	115-5765	1	Fan
5	120-5260	1	Tank-Overflow
6	1-643164	1	Cap-Tank, Overflow
7	131-2099-03	1	Bracket
8	95-5806	1	Bracket-Mounting, Air Cleaner
9	95-5805	1	Air Cleaner ASM
10	136-7859	1	Rain Cap Kit
10:1	1-643009	1	Clamp-Hose
11	322-4	2	Screw-HH
12	104-8300	4	Nut-HF, NI
13	3256-23	2	Washer-Plain
14	322-6	2	Screw-HH
15	117-9311-03	1	Screen
16	99-6810	17	Screw-HHF
19	3234-33	3	Screw-HHF
20	104-7201	17	Nut-HF, NI

Ref.	Part Number	Qty.	Description
21	119-9038	1	Shroud ASM
21:2	32117-2	1	Nut-Clinch
22	353-783	1	Fitting-STR
23	144-4021	1	Plate-Pump, Fuel
24	145-3154	1	Pump-Fuel, Electric
26	1-633630	1	Grommet
28	2412-87	2	Clamp-Cable
29	117-9860	1	Radiator
29:1	115-7766	1	Cap-Radiator
29:1:1	106-6755	1	Decal-Cap, Radiator
30	119-9037	1	Clamp-R
31	119-1730	2	Receptacle-Clip, Mini
32	119-1729	2	Retainer-Stud
33	120-1957	2	Stud-Rapier
34	107069	8	Clip
35	3256-22	4	Washer-Flat
36	321-3	4	Screw-HH
37	237-124	1	Grommet
38	115-8155	1	Decal-Warning
39	2412-134	1	Clamp-R

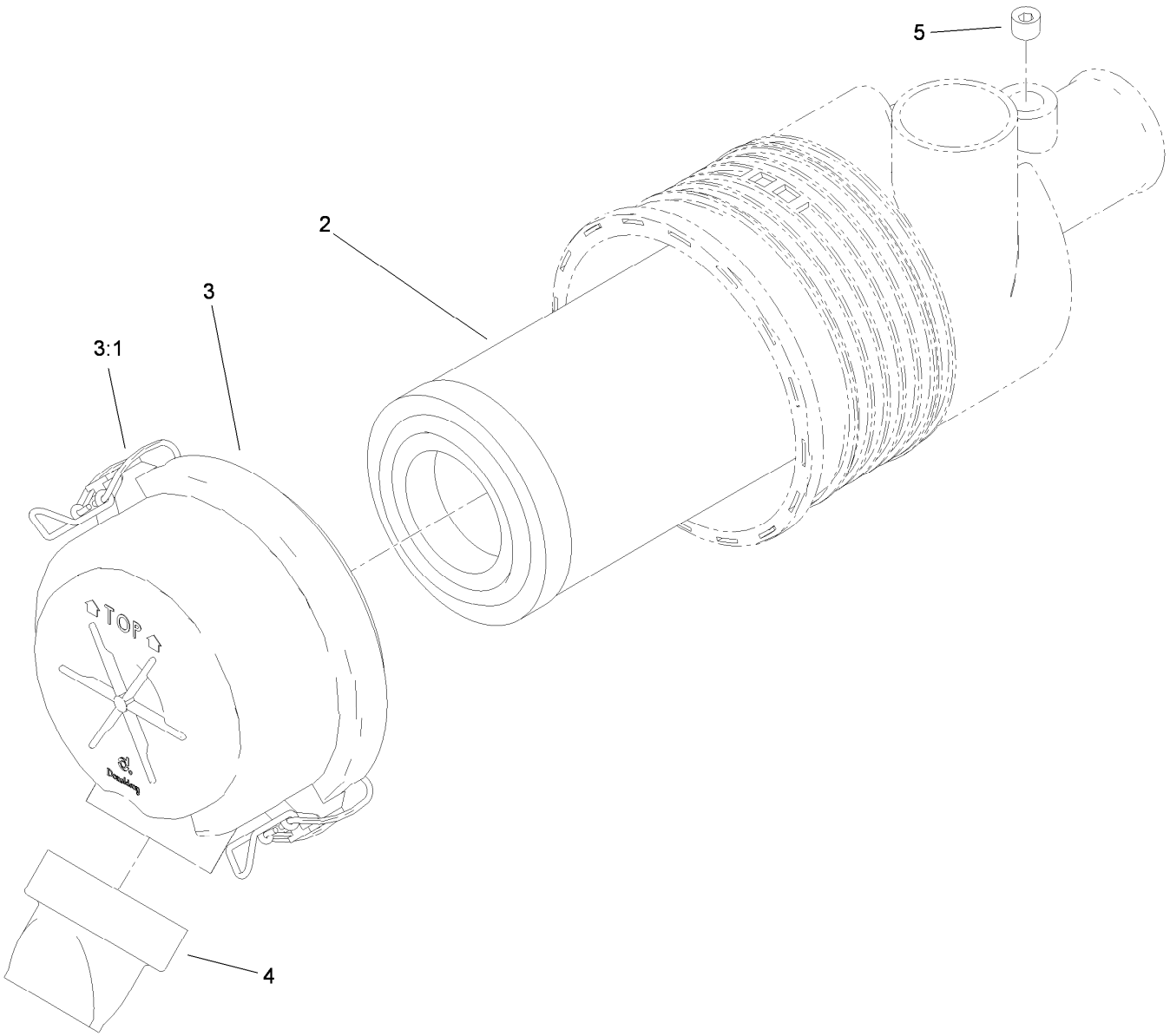

Air Cleaner Assembly No. 95-5805

Ref.	*Part Number*	*Qty.*	*Description*
2	108-3811	1	Filter-Air V-Twin HD
3	94-3652	1	Cover ASM
3:1	1-643283	2	Latch-Cleaner, Air
4	87-9400	1	Valve-Vacuator
5	285-17	1	Plug-Pipe

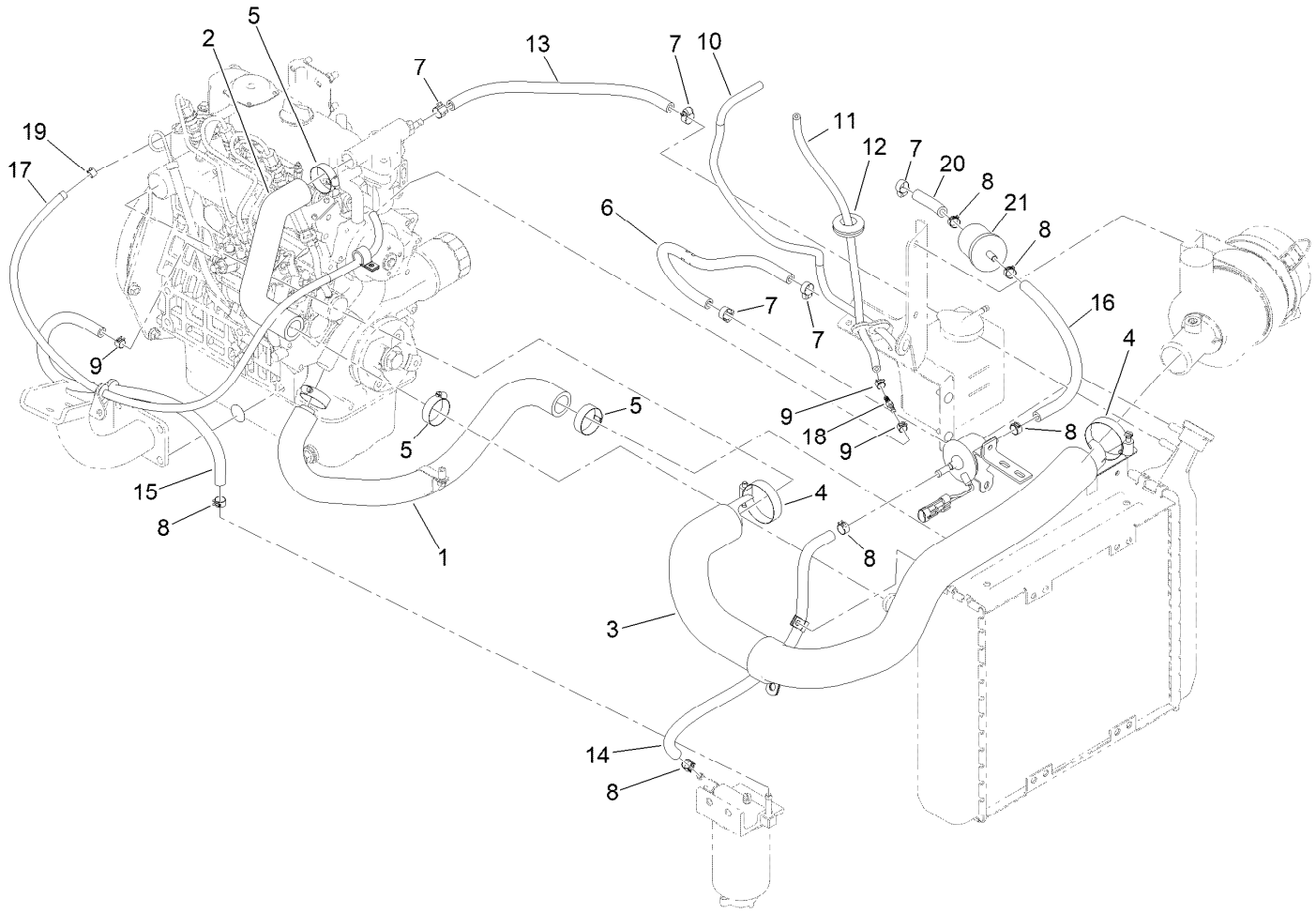

Radiator, Air Hose and Fuel Line Assembly

Ref.	Part Number	Qty.	Description
1	117-9268	1	Hose-Radiator, Lower
2	117-9261	1	Hose-Radiator, Upper
3	117-4481	1	Hose-Air
4	2412-92	2	Clamp-Hose
5	2412-34	4	Clamp-Hose
6	110-4113	1	Hose-Fuel
7	2412-108	5	Clamp-Worm
8	92-2379	8	Clamp-Hose
9	2412-146	3	Clamp-Hose
10	119-6074	1	Hose-Fuel
11	119-8150	1	Hose-Fuel

Ref.	Part Number	Qty.	Description
12	240-4	1	Grommet-Rubber
13	119-8136	1	Hose-Fuel
14	110-4109	1	Hose-Fuel
15	110-6187	1	Hose-Fuel
16	130-4332	1	Hose-Fuel
17	119-3517	1	Hose-Fuel
18	120-1996	1	Fitting-STR
19	2412-80	3	Clamp-Hose
20	133-0223	1	Hose-Fuel
21	98-7612	1	Filter-Fuel

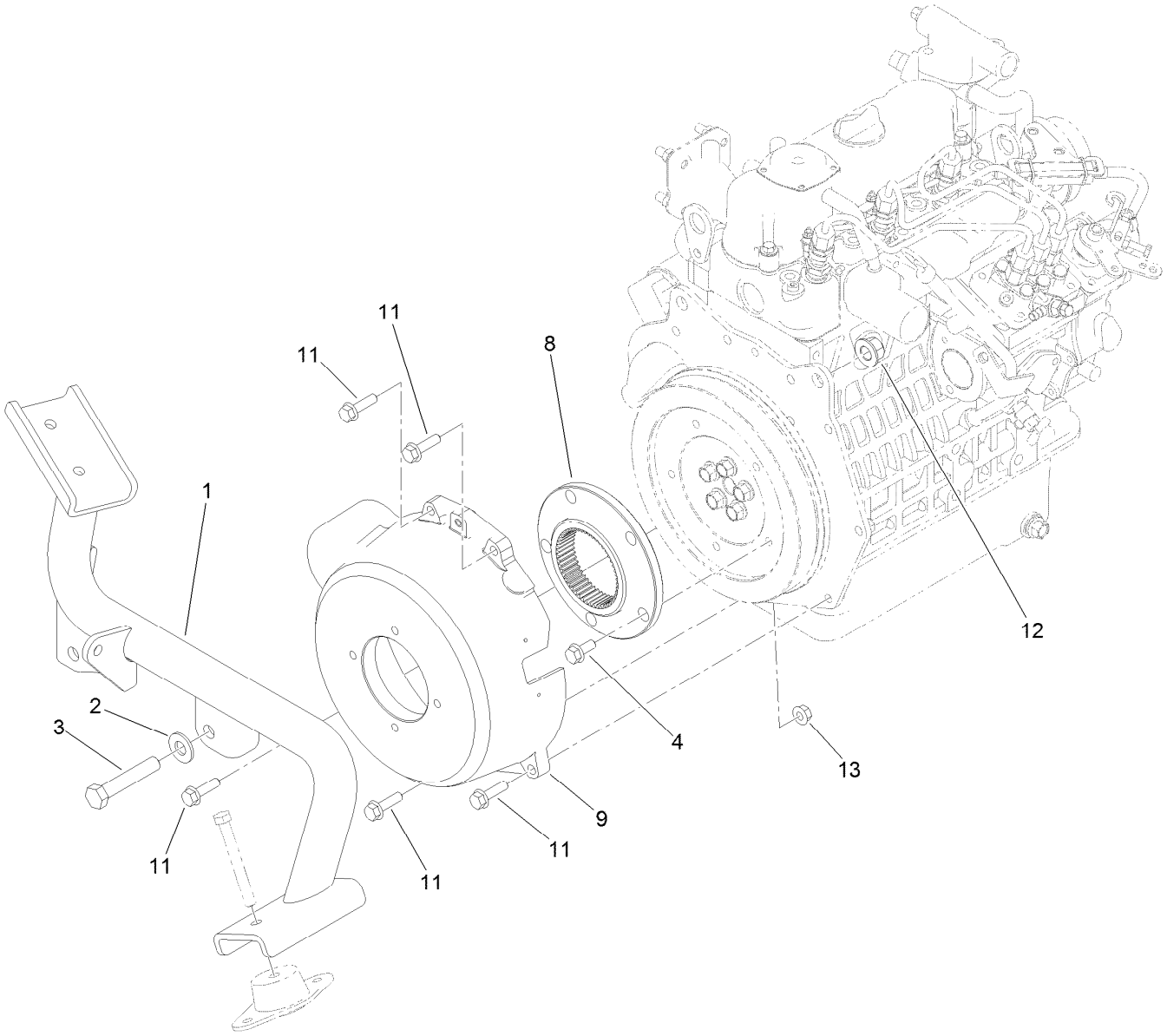

Bellhousing Assembly

Ref.	*Part Number*	*Qty.*	*Description*
1	119-4470-03	1	Mount-Engine, Rear
2	87-7270	2	Washer-Thrust
3	325-11	2	Screw-HH
4	33104-020	5	Screw-HHF
8	115-8727	1	Flange-Coupling
9	132-6994	1	Housing-Bell
11	33104-030	5	Screw-HHF
12	99-5107	2	Nut-HF Nylock
13	33004-00	1	Nut-HF

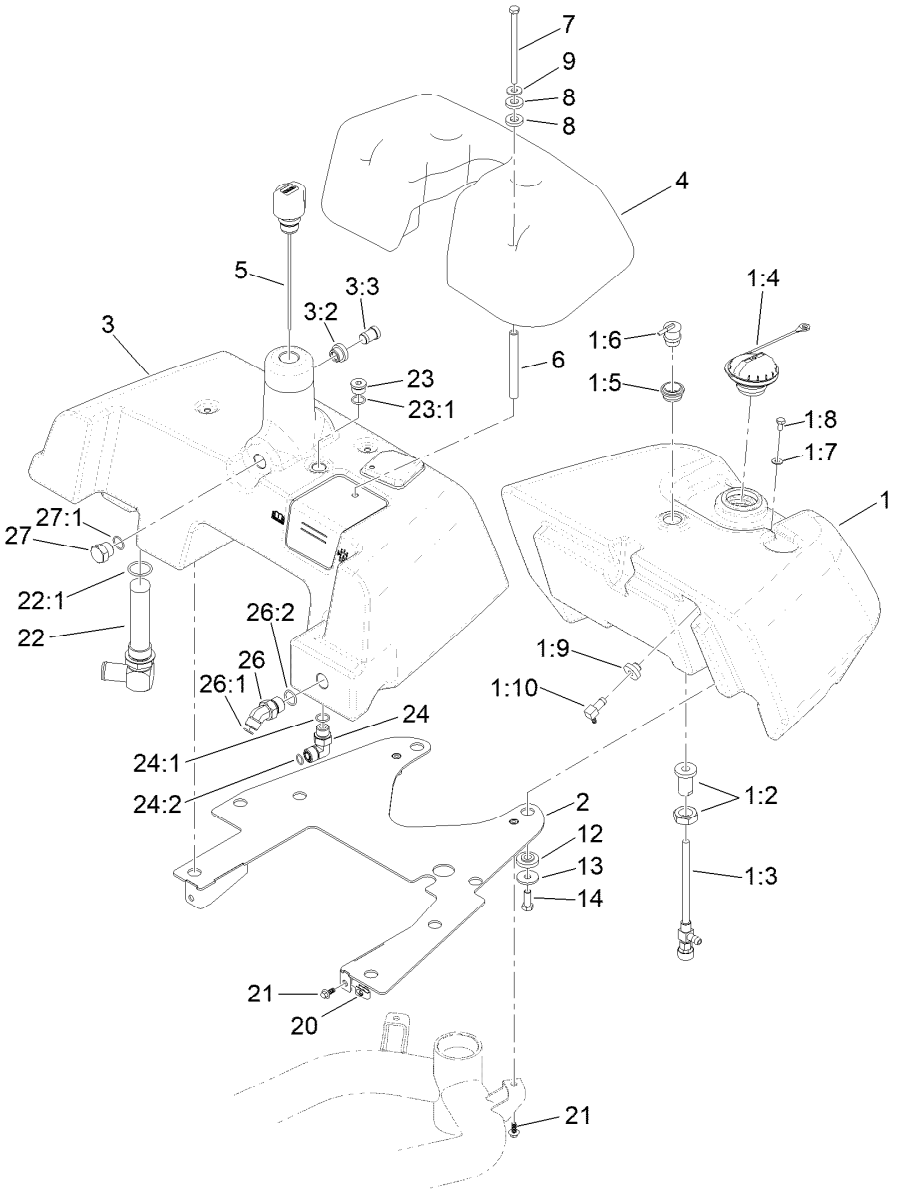

Fuel and Hydraulic Tank Assembly

Ref.	Part Number	Qty.	Description
1	139-2662	1	Fuel Tank ASM
1:2	114-4677	1	Bulkhead ASM
1:3	114-4679	1	Fitting-Shut Off, Fuel
1:4	121-5174	1	Cap-Fuel, Diesel
1:5	114-0284	1	Grommet
1:6	119-3547	1	Valve-Vent, Fuel
1:7	3256-1	1	Washer-Flat
1:8	321-2	1	Screw-HH
1:9	46-6560	1	Bushing
1:10	104-5228	1	Fitting-Elbow, 90 DEG
2	133-8892-03	1	Plate-Mount, Tank
3	136-8530	1	HYD Tank ASM
3:2	136-8531	1	Grommet
3:3	136-8534	1	Plug
4	136-8518	1	Cover-Tank
5	136-8559	1	Dipstick-Breather
6	145-4580	4	Spacer-Tube
7	322-29	4	Screw-HH
8	83-1470	8	Washer-Neoprene

Ref.	Part Number	Qty.	Description
9	3256-71	4	Washer-Flat
12	240-11	8	Bushing-Flange
13	63-8410	8	Washer
14	323-6	8	Screw-HH
20	107069	2	Clip
21	99-6810	4	Screw-HHF
22	105-0204	1	Strainer Fitting ASM
22:1	237-146	1	O-Ring
23	353-988	1	Plug-Hex
23:1	237-79	1	O-Ring
24	340-98	1	Fitting-Elbow, 90 DEG
24:1	237-79	1	O-Ring
24:2	237-30	1	O-Ring
26	340-89	1	Fitting-HYD, 45 DEG
26:1	237-30	1	O-Ring
26:2	237-80	1	O-Ring
27	353-551	1	Plug-HH
27:1	237-80	1	O-Ring

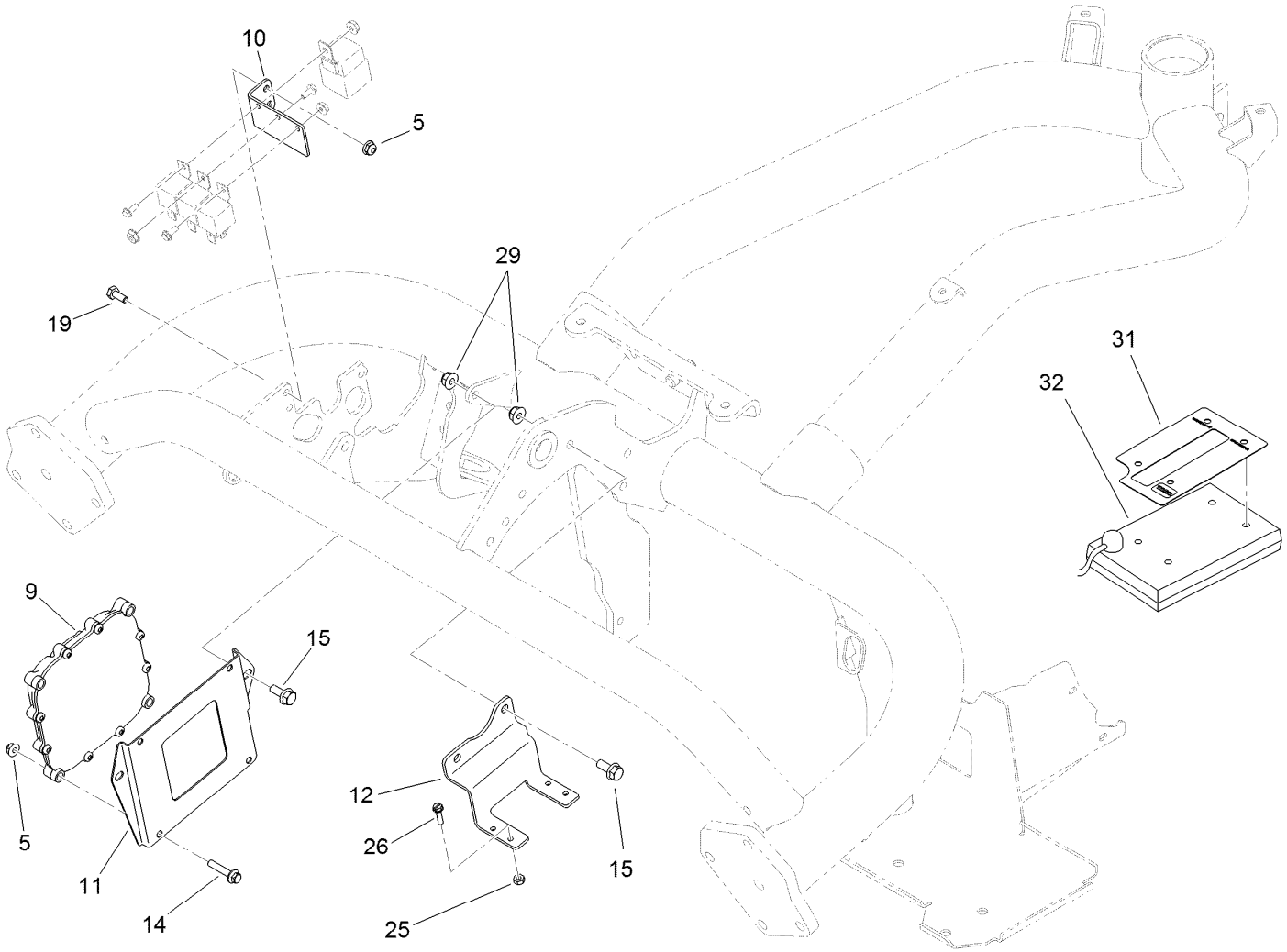

Controller Assembly

Ref.	*Part Number*	*Qty.*	*Description*
5	104-7201	6	Nut-HF, NI
9	122-3374	1	Controller
10	119-2097-01	1	Bracket-Relay
11	119-2099-01	1	Plate-Mounting, Controller
12	119-2119-01	1	Bracket-Block, Fuse
14	3234-21	4	Screw-HHF
15	3234-47	4	Screw-HHF
19	321-3	2	Screw-HH
25	3296-2	4	Nut-Lock, NI
26	32105-13	4	Screw-HWH
29	104-8300	4	Nut-HF, NI
31	115-8227	1	Decal-Controller
32	85-4750	1	Box-Display, Diagnostic

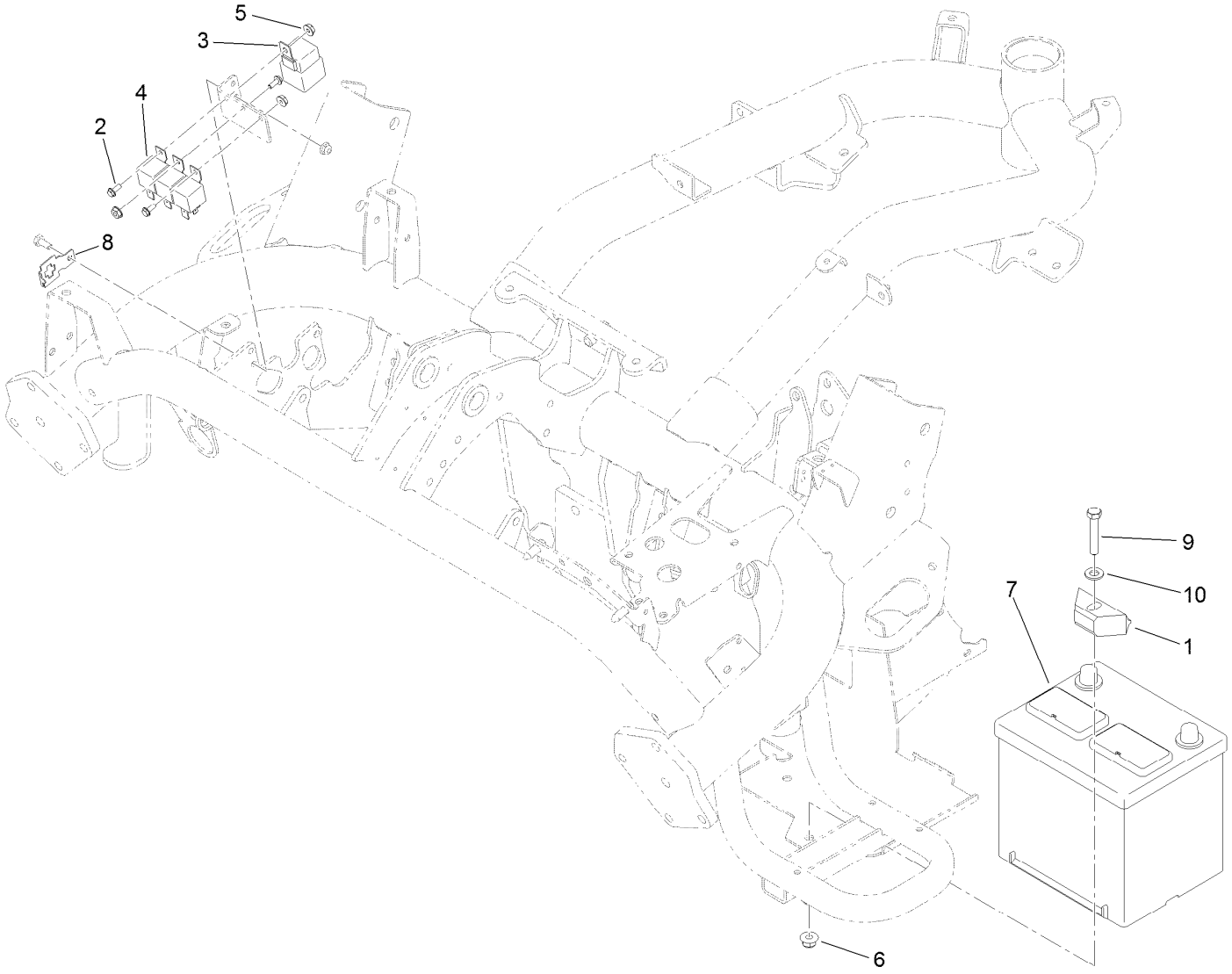

Battery Assembly

Ref.	*Part Number*	*Qty.*	*Description*
1	138-6335	1	Retainer-Battery
2	112-6349	3	Screw-HWH
3	99-7430	1	Relay-Mini
4	99-7435	3	Relay
5	32149-8	3	Nut-Keps
6	104-8301	1	Nut-HF, NI
7	106-5186	1	Battery - Wet, 12V, 540 CCA
8	114-5502	1	Clip-Fuse
9	323-10	1	Screw-HH
10	3256-24	1	Washer-Plain

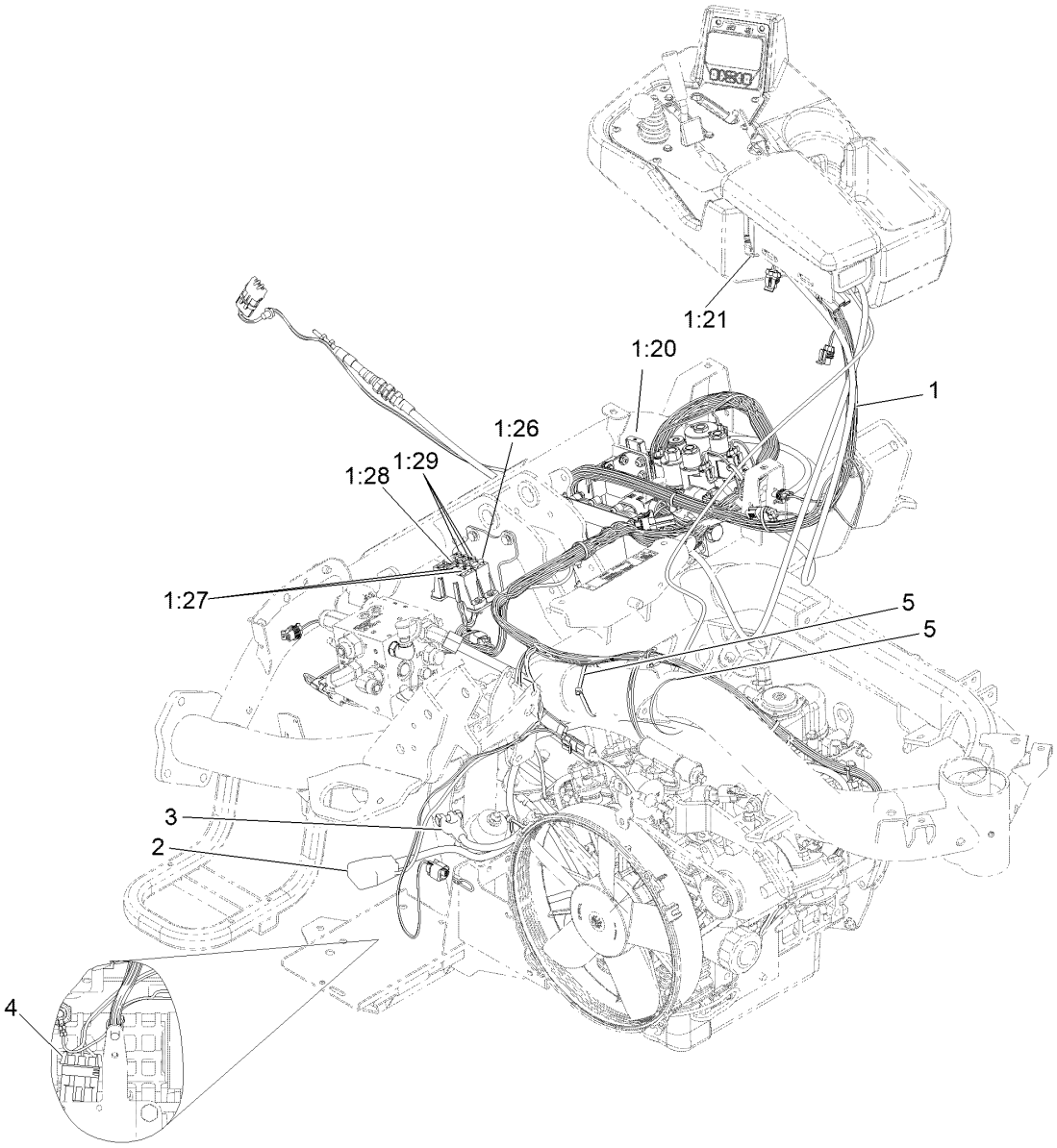

Wire Harness Assembly

Ref.	*Part Number*	*Qty.*	*Description*
1	122-1735	1	Harness-Wire, Triflex Diesel
1:15	100-4918	1	Diode ●
1:20	94-8002	1	Fuse-Blade, 50 Amp
1:21	104-4022	1	Resistor-75 Ohm
1:26	94-6710	1	Fuse-2 Amp
1:27	218-578	2	Fuse-Blade, 10 Amp
1:28	109355	1	Fuse-Blade, 15 Amp
1:29	114241	3	Fuse-Blade, 7.5 Amp
2	114-9747	1	Cable-Battery, Positive
3	115-8135	1	Cable-Battery, Negative
4	99-3441	1	Harness-Wire, Fusible Link
5	3290-379	3	Tie-Cable

● Not illustrated

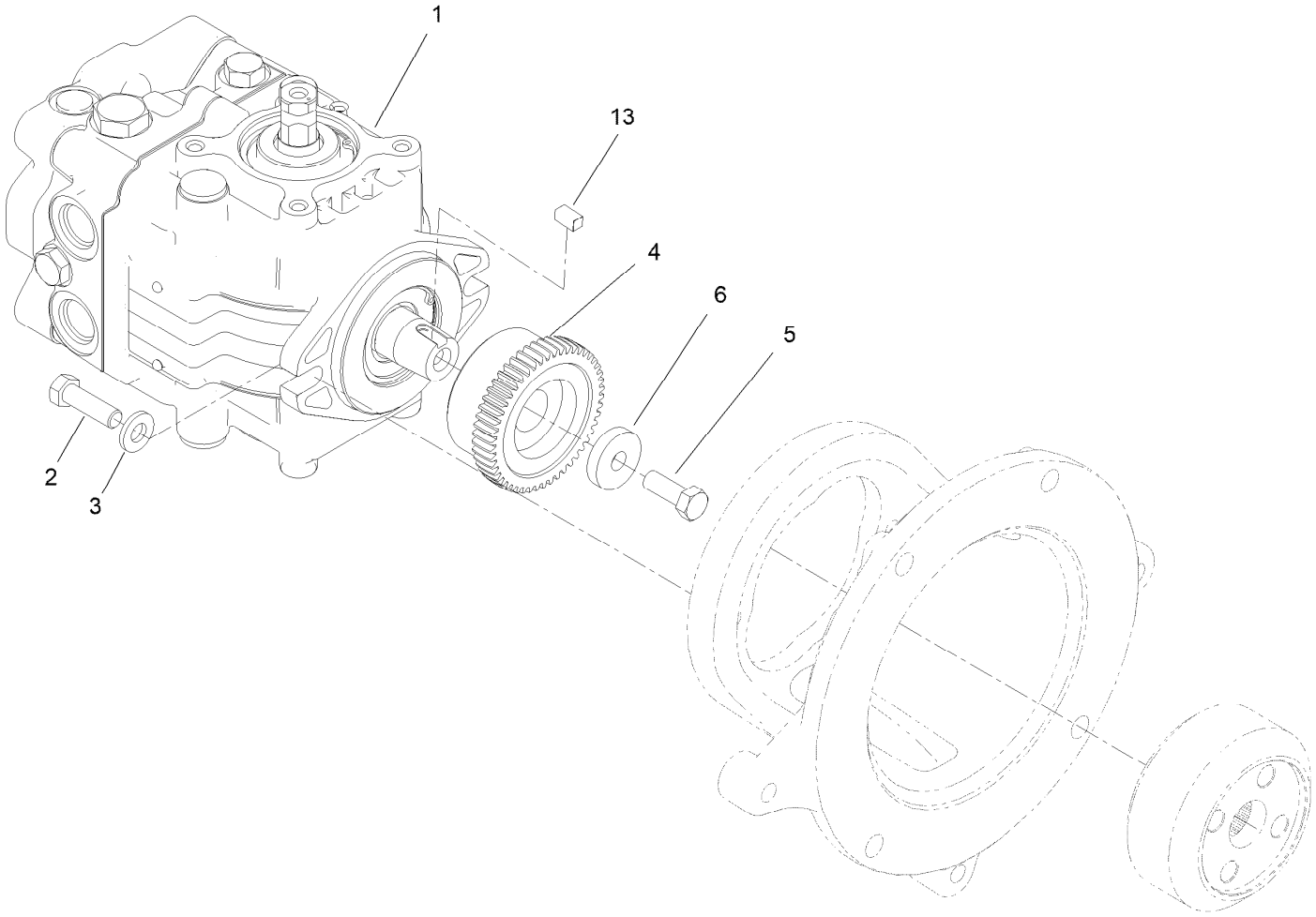

Pump Coupling Assembly

Ref.	*Part Number*	*Qty.*	*Description*
1	139-6474	1	Pump-Hydro, Danfoss
2	323-7	2	Screw-HH
3	100-4852	2	Washer-Hardened
4	119-4418	1	Coupling
5	3211-4	1	Screw-HH
6	138-8594	1	Spacer
13	145-4589	1	Key-Squ

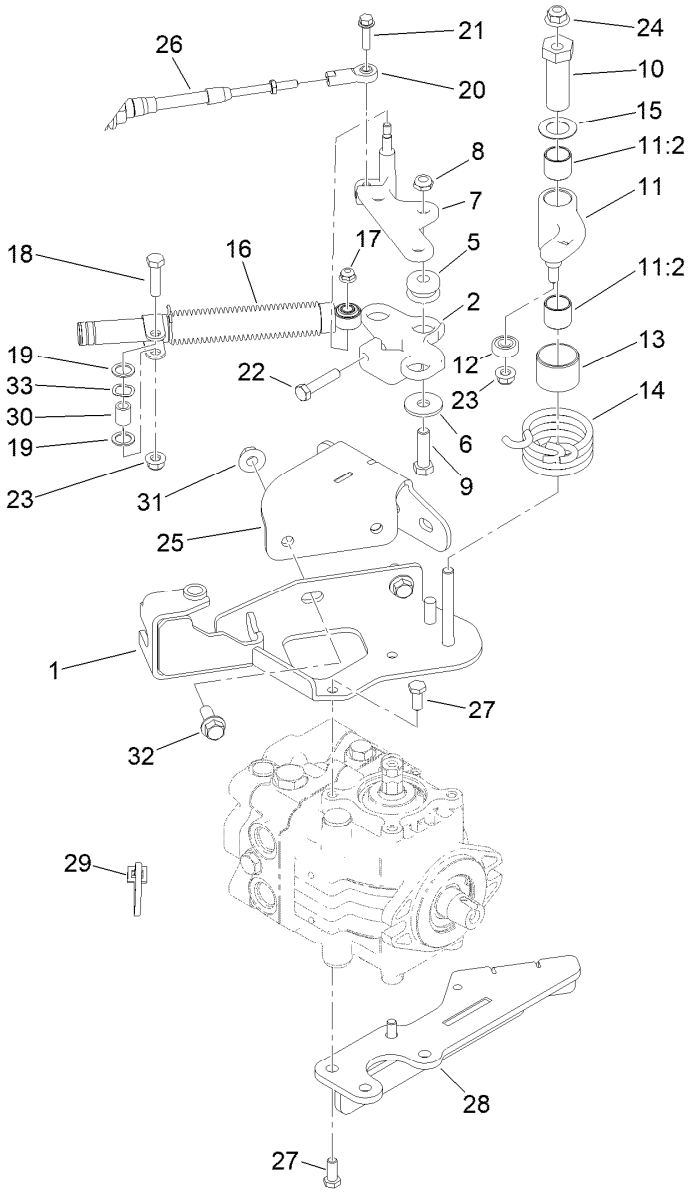

Neutral Centering Assembly

Ref.	Part Number	Qty.	Description
1	140-5211-03	1	Bracket-Cable, Hydro [black]
2	140-5231	1	Cam-Neutral
5	63-9750	3	Mount
6	93-8806	3	Washer-Hardened
7	140-5221	1	Lever-Hydro
8	3296-59	3	Nut-Lock, NI
9	323-29	3	Screw-HH
10	117-9046	1	Stud-Eccentric
11	145-0071	1	Neutral Arm ASM
11:2	94-9609	2	Bushing-Straight
12	251-259	1	Bearing-Ball
13	136-8418	1	Bushing
14	117-9047	1	Spring-Torsion
15	119-8199	1	Washer-Nylon
16	140-6248	1	Damper
17	104-7201	1	Nut-HF, NI

Ref.	Part Number	Qty.	Description
18	322-6	1	Screw-HH
19	94-8196	2	Washer-Nylon
20	2411-41	1	Rod End-Ball Joint
21	119-1066	1	Screw-HHF, Patch
22	120-2779	1	Screw-HH
23	104-8300	2	Nut-HF, NI
24	104-8301	1	Nut-HF, NI
25	140-5216-03	1	Bracket-Mount [black]
26	119-1734	1	Cable-Control, Traction
27	33114-020	4	Screw-HH
28	140-5219-03	1	Bracket-Support, Muffler [black
29	3290-379	1	Tie-Cable
30	94-8197	1	Tube-Pivot
31	32128-19	2	Nut-HF Lock,Large Flg
32	139-2597	2	Screw-HHF
33	108473	1	Washer-Wave

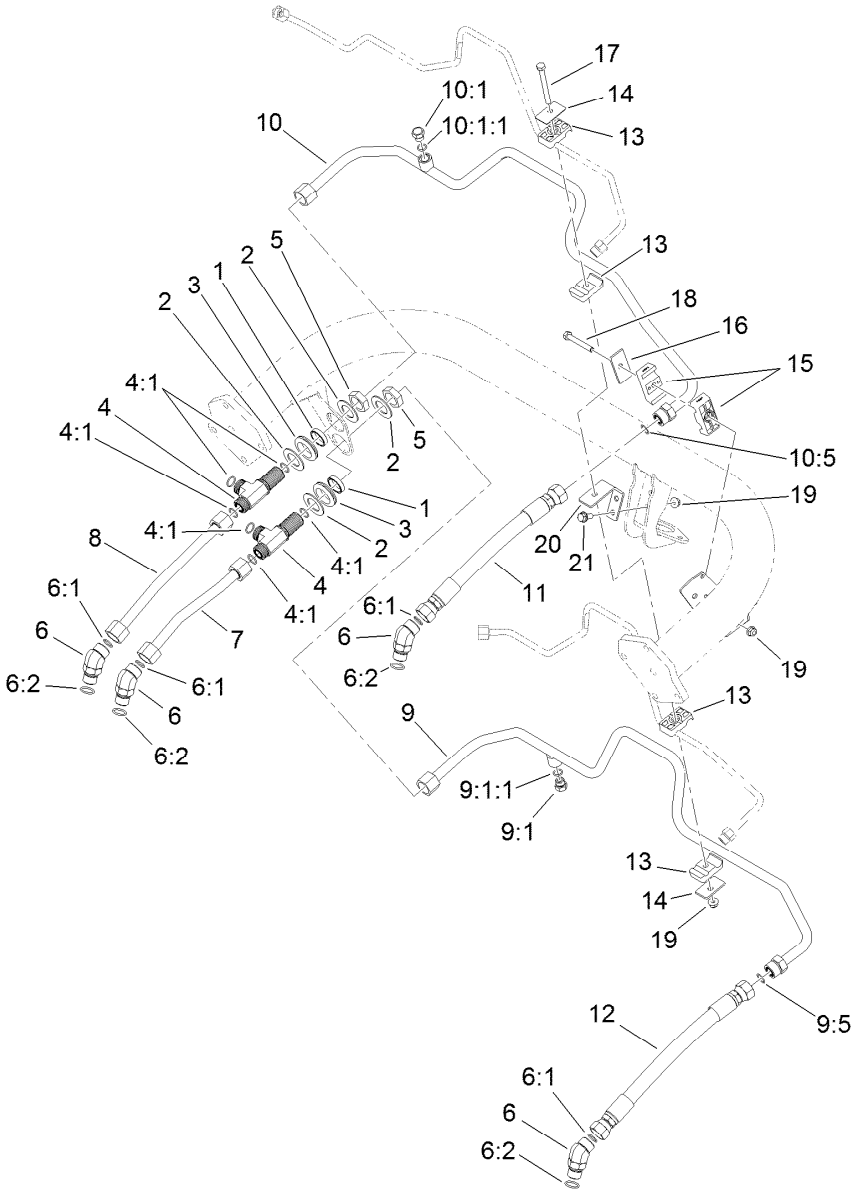

Traction Drive Hydraulic Line Assembly

Ref.	Part Number	Qty.	Description
1	125-1984	2	Spacer
2	69-9010	4	Washer
3	240-3	2	Grommet-Rubber
4	94-5350	2	Fitting-Tee
4:1	237-65	3	O-Ring
5	340-74	2	Nut-Lock, Bulkhead
6	340-14	4	Fitting-HYD, 45 DEG
6:1	237-65	1	O-Ring
6:2	237-80	1	O-Ring
7	119-2057	1	Tube-HYD
8	119-2058	1	Tube-HYD
9	119-2063	1	Tube-HYD
9:1	353-508	1	Plug-HH
9:1:1	237-42	1	O-Ring
9:5	237-65	1	O-Ring

Ref.	Part Number	Qty.	Description
10	119-2064	1	HYD Tube ASM
10:1	353-508	1	Plug-HH
10:1:1	237-42	1	O-Ring
10:5	237-65	1	O-Ring
11	115-9484	1	Hose-HYD
12	115-9485	1	Hose-HYD
13	56-7970	4	Clamp-Tube
14	69-9760	2	Plate-Cover
15	138-5045	2	Clamp-Tube
16	69-9761	1	Plate-Cover
17	322-20	1	Screw-HH
18	322-12	1	Screw-HH
19	104-8300	4	Nut-HF, NI
20	119-2092	1	Bracket-Tube
21	3234-47	2	Screw-HHF

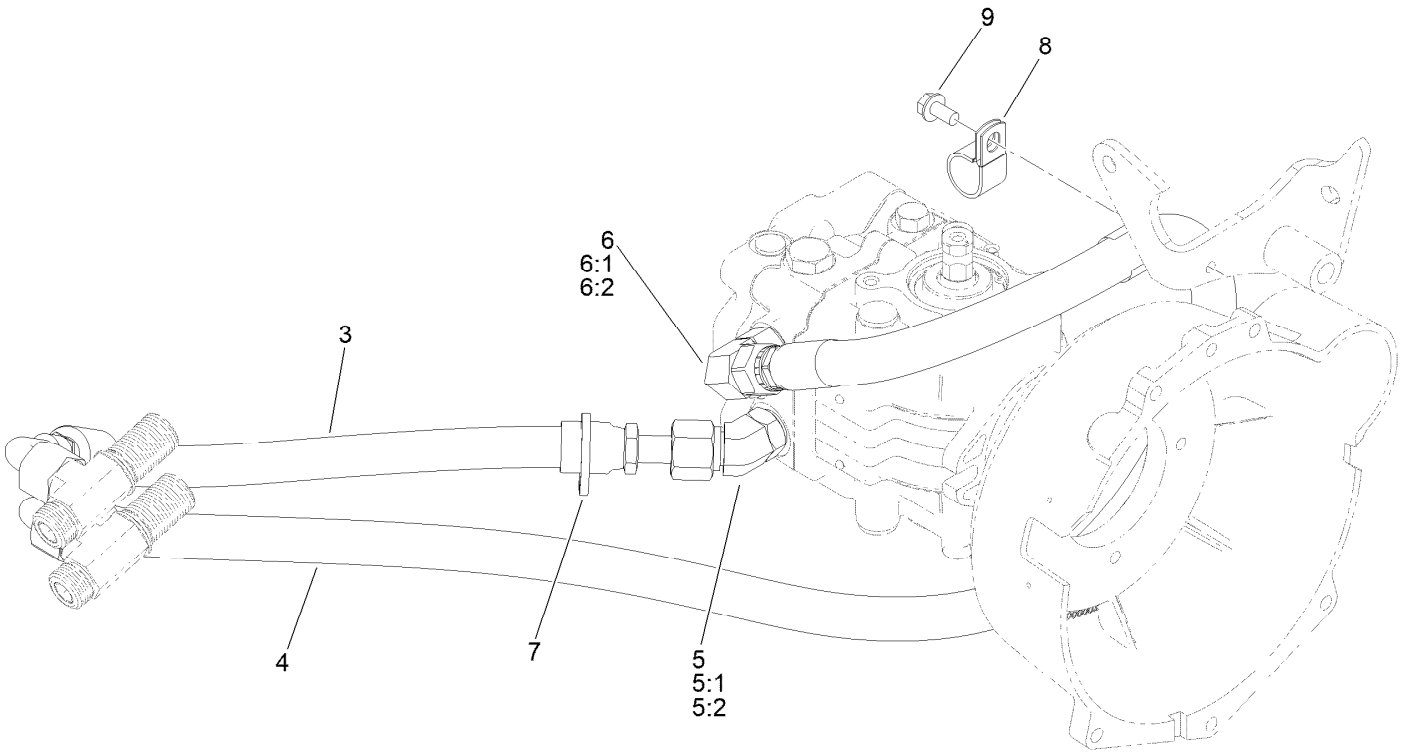

Traction Drive Hose Routing Assembly

Ref.	*Part Number*	*Qty.*	*Description*
3	140-5273	1	Hose ASM, HYD
4	120-1967	1	Hose-HYD
5	340-14	1	Fitting-HYD, 45 DEG
5:1	237-65	1	O-Ring
5:2	237-80	1	O-Ring
6	340-17	1	Fitting-Elbow, 90 DEG
6:1	237-65	1	O-Ring
6:2	237-80	1	O-Ring
7	3290-378	1	Tie-Cable
8	2412-39	1	Clamp-R
9	32144-14	1	Screw-HWHTF

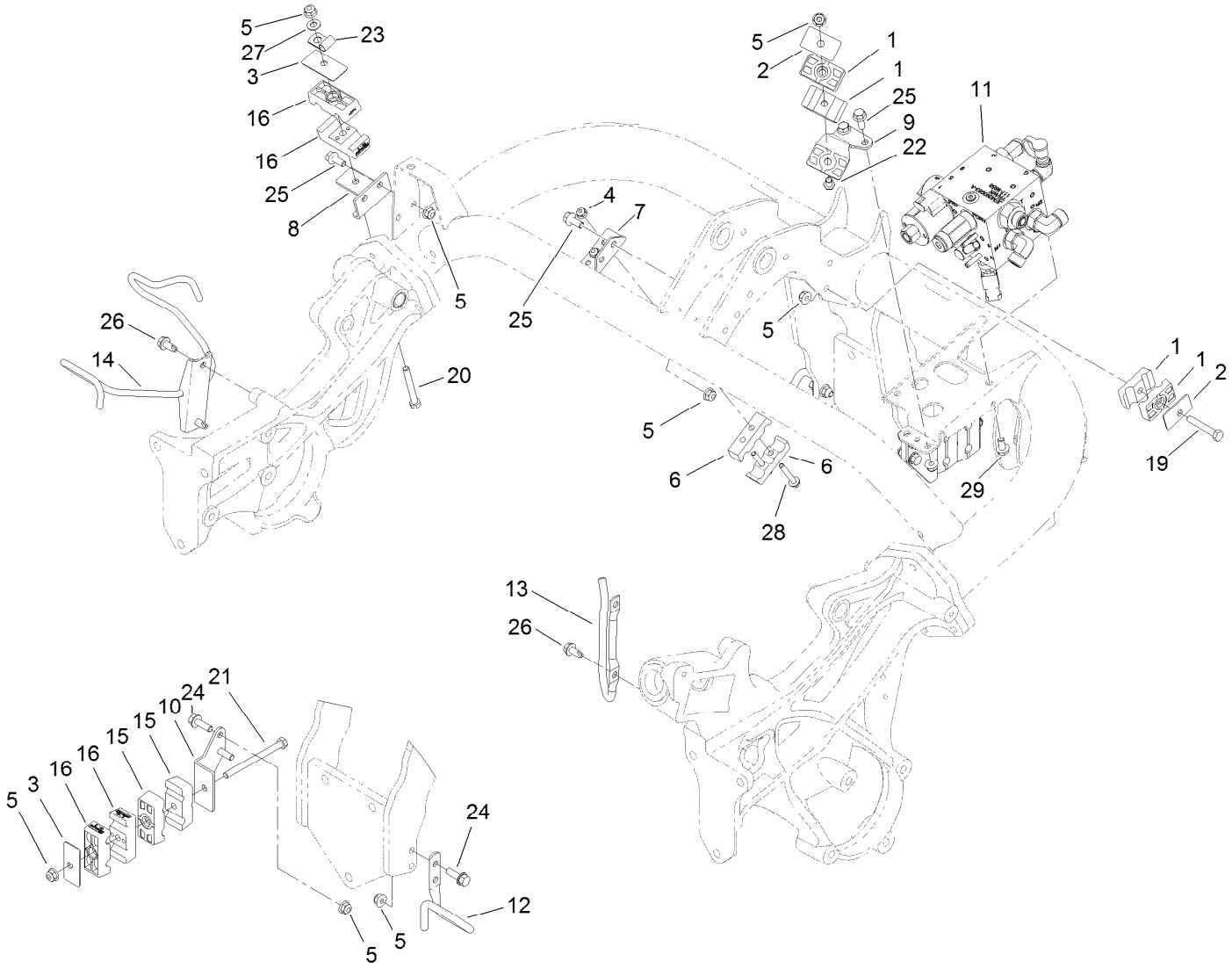

Hydraulic Mow Assembly

Ref.	Part Number	Qty.	Description
1	56-7972	4	Clamp-Tube
2	69-9760	2	Plate-Cover
3	69-9761	2	Plate-Cover
4	104-7201	2	Nut-HF, NI
5	104-8300	14	Nut-HF, NI
6	119-2082	2	Clamp-Tube
7	119-2091	1	Bracket-Tube
8	119-2095	1	Bracket-Tube
9	119-2106	1	Bracket-Clamp
10	119-4493	1	Bracket-Support, Tube
11		1	Mow Manifold ASM ●
12	121-6671	1	Wireform Hose Support
13	121-6667	1	Wireform-Hose, HYD
14	119-8109-03	1	Bracket-Hose
15	119-8156	2	Clamp-Tube
16	138-5044	4	Clamp-Tube
19	322-10	1	Screw-HH
20	322-12	1	Screw-HH
21	322-19	1	Screw-HH
22	322-21	1	Screw-HH
23	2412-113	1	Clamp-R
24	3234-29	4	Screw-HHF
25	3234-47	6	Screw-HHF
26	32104-32	4	Screw-HWH
27	3256-23	1	Washer-Plain
28	32105-18	2	Screw-HHF
29	3234-7	2	Screw-HHF

● Not serviced separately

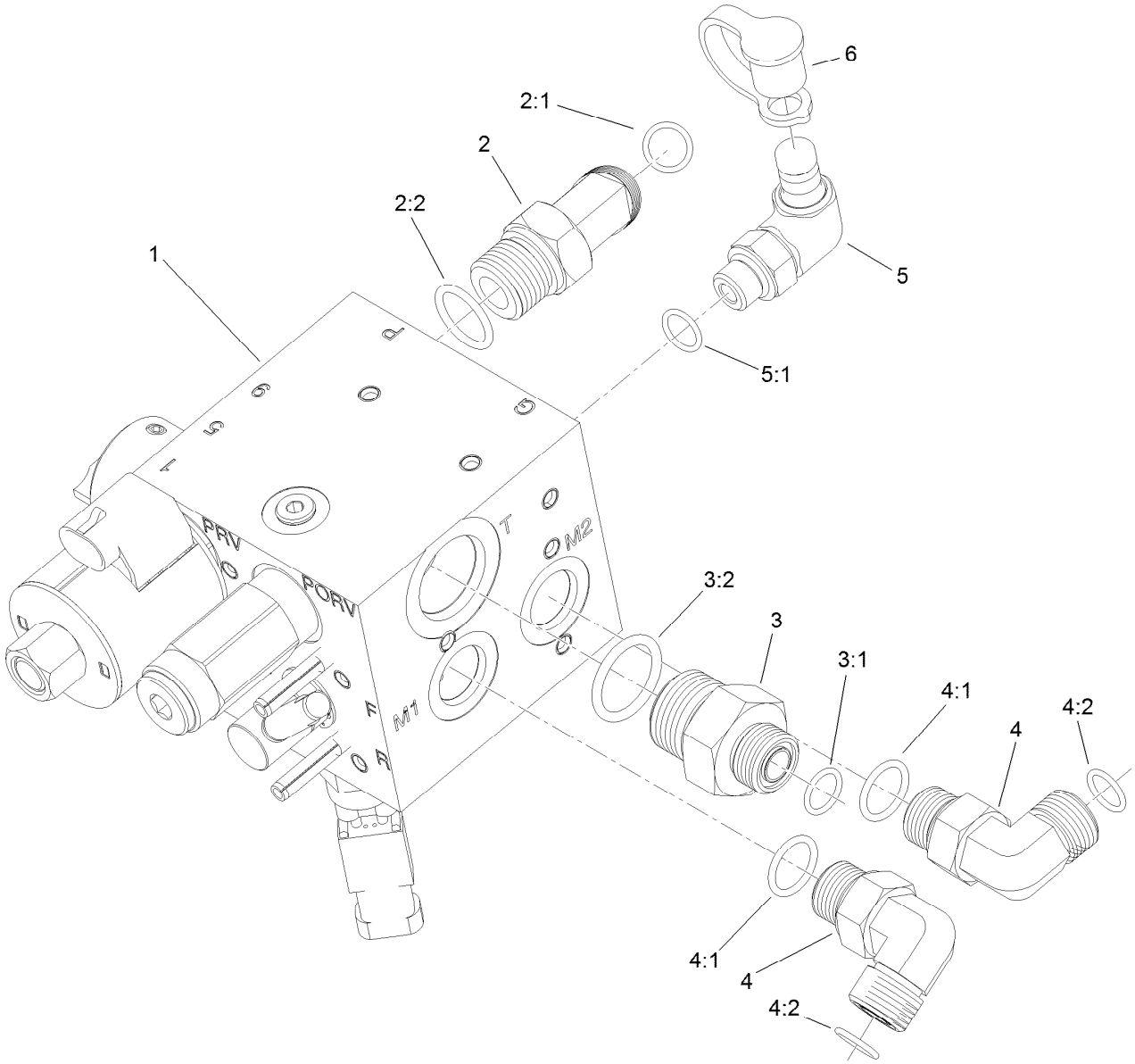

Hydraulic Mow Manifold Assembly

Ref.	*Part Number*	*Qty.*	*Description*
1	147-3079	1	Block-Manifold
2	340-89	1	Fitting-HYD, 45 DEG
2:1	237-30	1	O-Ring
2:2	237-80	1	O-Ring
3	100-4240	1	Fitting-STR
3:1	237-30	1	O-Ring
3:2	237-81	1	O-Ring
4	340-98	2	Fitting-Elbow, 90 DEG
4:1	237-79	1	O-Ring
4:2	237-30	1	O-Ring
5	115-9147	1	Fitting-Elbow, 90 DEG
5:1	237-78	1	O-Ring
6	354-79	1	Cap-Dust

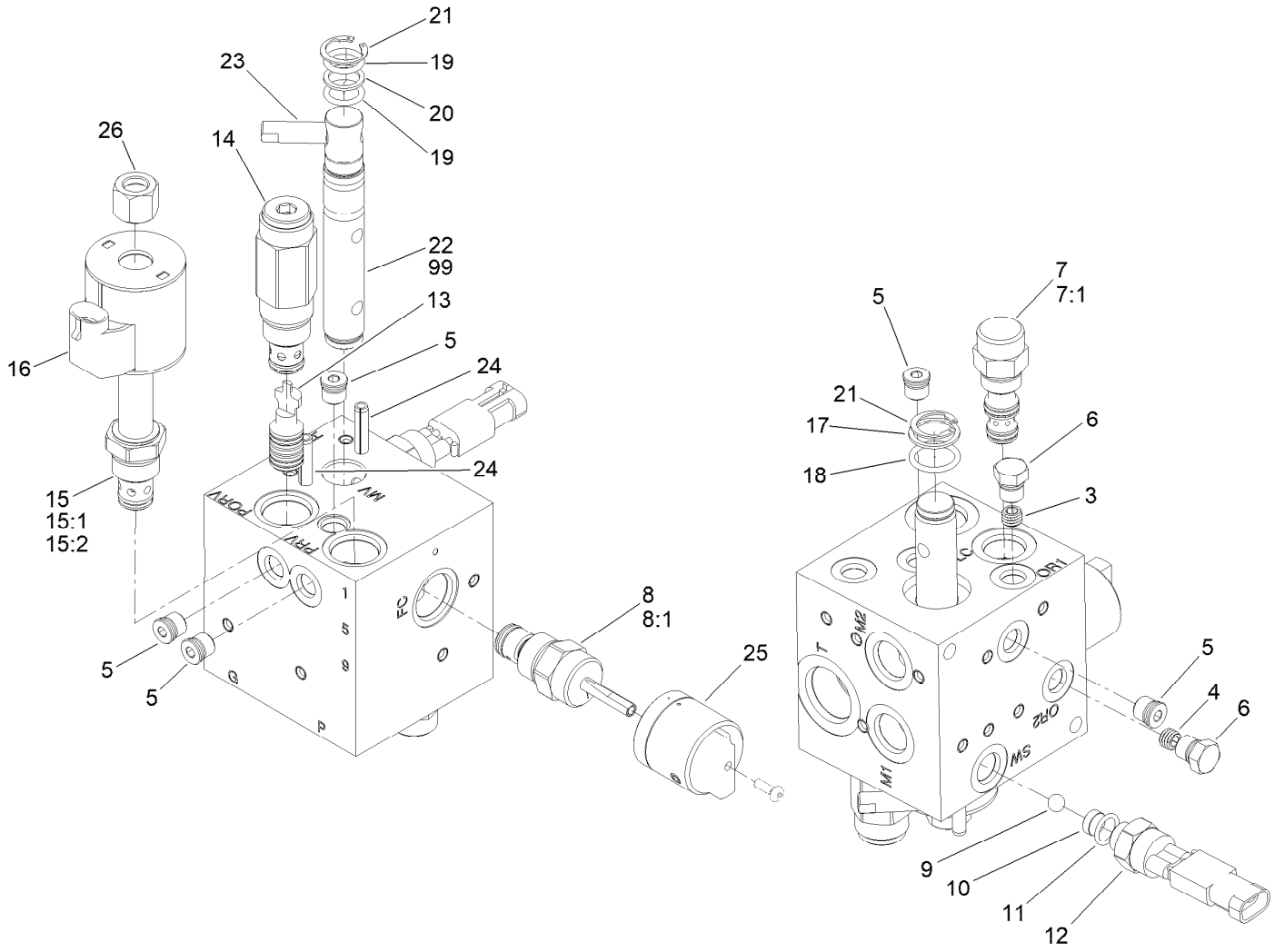

Hydraulic Mow Manifold Assembly No. 147-3079

Ref.	Part Number	Qty.	Description
3	120-5761	1	Orifice (.020)
4	112-9202	1	Orifice-Flow, Control (.060)
5	106-1025	3	Plug-HYD
6	117-0115	2	Plug
7	120-5762	1	Element-Logic
7:1	110-8773	1	Seal Kit
8	147-3068	1	Valve-Control, Manual Flow
8:1	132-6231	1	Seal Kit
9	117-4605	1	Ball-SS
10	119-7145	1	Shim-SS
11	110-8757	1	O-Ring
12	72-4320	1	Switch-Ball
13	119-7146	1	Piston-Pilot (With Seals)
14	119-7147	1	Valve-Relief
15	110-8799	1	Valve-Relief, Proportional

Ref.	Part Number	Qty.	Description
15:1	110-6316	1	Seal Kit
15:2	130-8180	1	Nut-Coil (9/16-24 Unef-2B)
16	110-6344	1	Coil-12V, DC
17	106-8139	1	Ring-Back Up
18	117-4607	1	O-Ring
19	117-4606	2	O-Ring
20	112-6534	1	Ring-Back Up
21	112-6532	2	Ring-Retaining
22	119-7141	1	Spool
23	110-8758	1	Handle-Spool
24	112-6531	2	Pin-Spring
25	119-7140	1	Knob
26	130-8180	1	Nut-Coil (9/16-24 Unef-2B)
99	119-7142	1	Kit-Seal, Spool

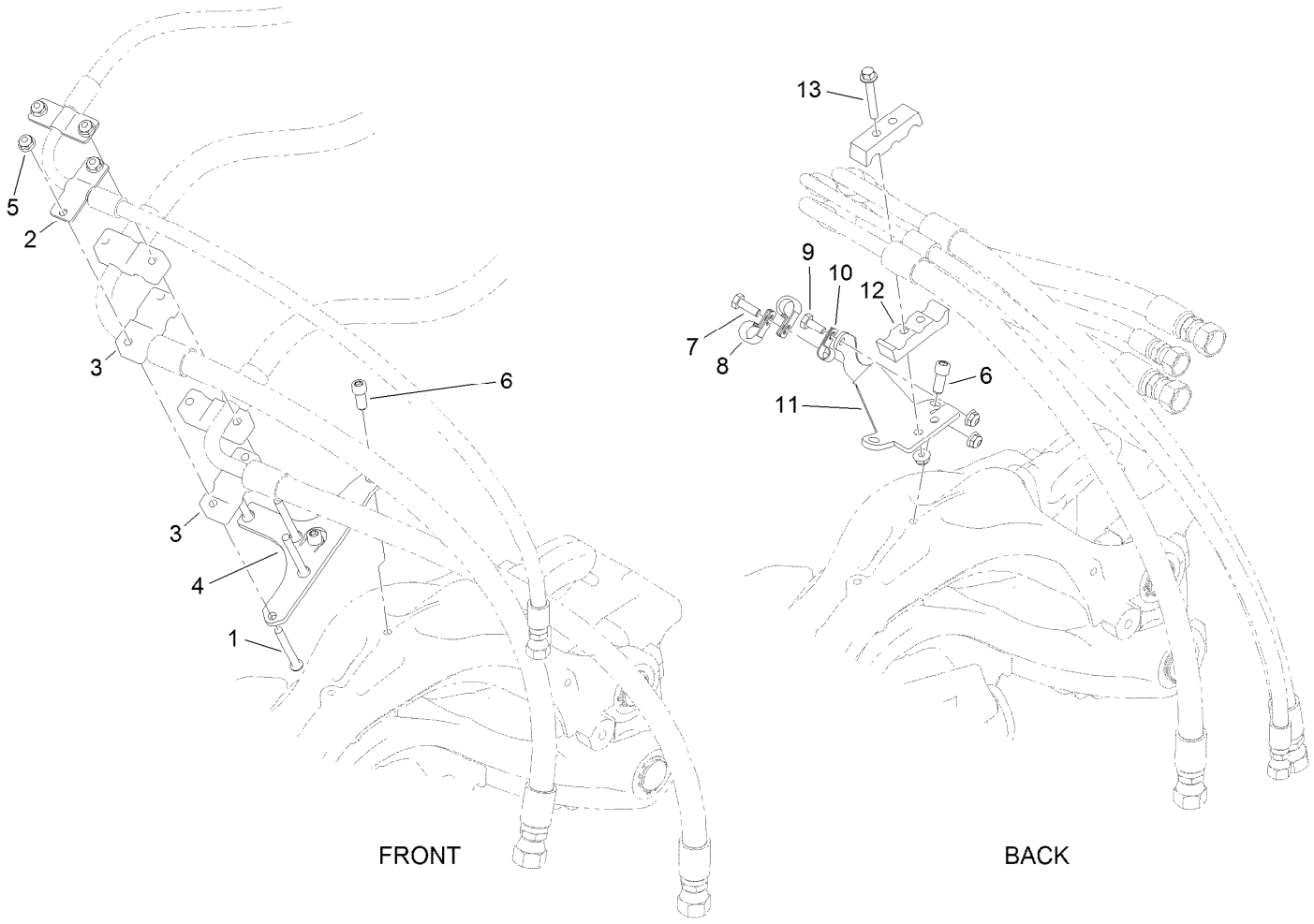

Hydraulic Mow Clamp Assembly

Ref.	*Part Number*	*Qty.*	*Description*
1	120-2011	8	Screw-HSBH
2	119-8142	4	Strap
3	119-8141	8	Clamp-Tube
4	119-8143-03	2	Bracket-Clamp, Hose
5	104-7201	12	Nut-HF, NI
6	100-2401	6	Screw-HSH
7	321-4	1	Screw-HH
8	2412-73	2	Clamp-R
9	321-3	1	Screw-HH
10	2412-89	1	Clamp-R
11	119-8172-03	1	Bracket-Hose
12	119-2082	2	Clamp-Tube
13	32105-18	2	Screw-HHF

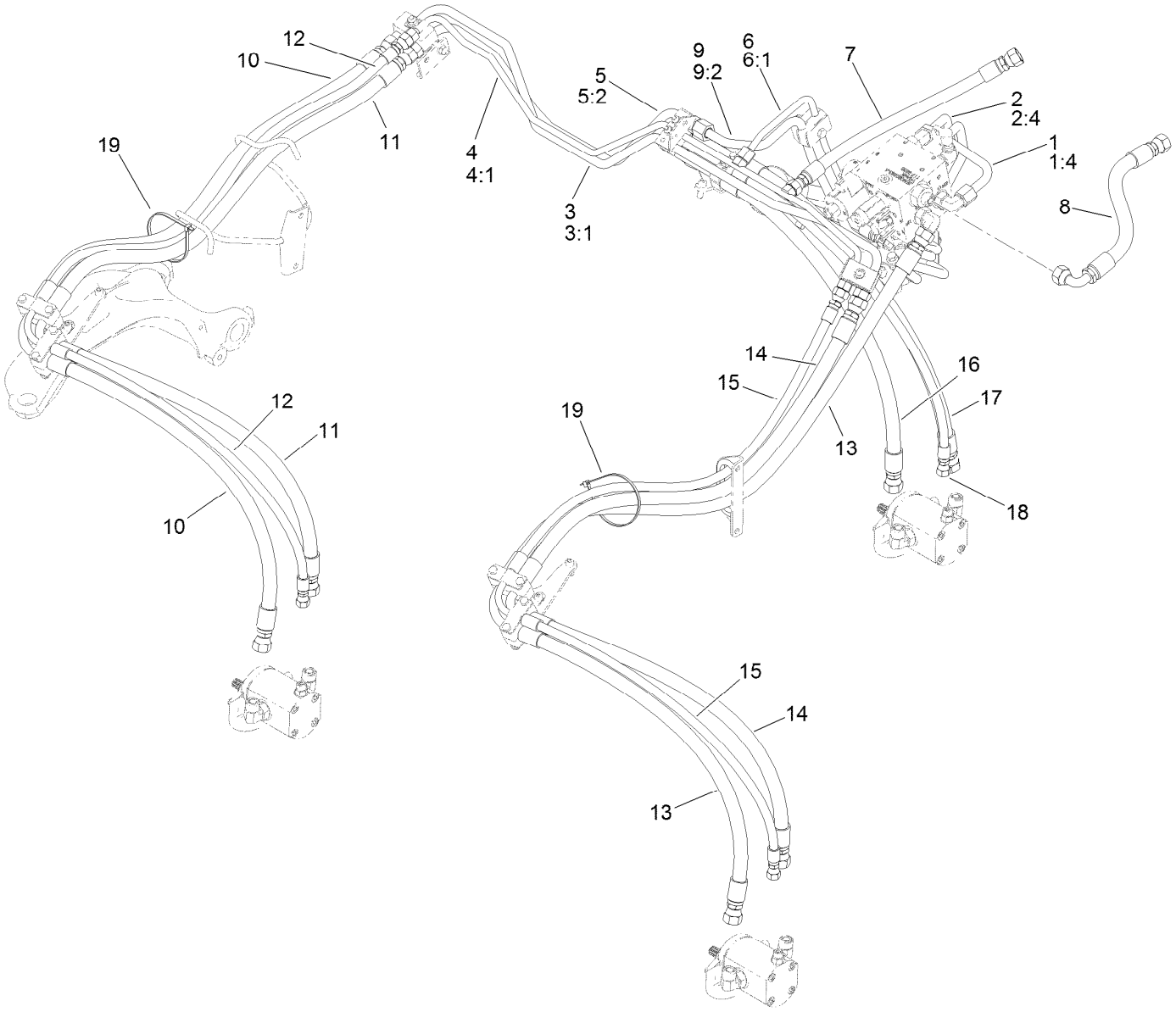

Hydraulic Mow
Hose Routing Assembly

Ref.	*Part Number*	*Qty.*	*Description*
1	117-9347	1	HYD Tube ASM
1:4	237-30	1	O-Ring
2	119-2073	1	HYD Tube ASM
2:4	237-30	1	O-Ring
3	119-2078	1	HYD Tube ASM
3:1	237-30	2	O-Ring
4	119-2079	1	HYD Tube ASM
4:1	237-22	4	O-Ring
5	119-2084	1	HYD Tube ASM
5:2	237-30	2	O-Ring
6	119-2085	1	HYD Tube ASM
6:1	237-22	1	O-Ring
7	119-2089	1	Hose-HYD (Case To Tank)
8	119-8106	1	Hose-HYD (Mow Block/Tank)

Ref.	*Part Number*	*Qty.*	*Description*
9	119-8122	1	HYD Tube ASM
9:2	237-30	1	O-Ring
10	140-5282	1	HYD Hose ASM (Pressure #3)
11	140-5283	1	HYD Hose ASM (Return #3)
12	139-6536	1	Hose ASM Case 3
13	140-5284	1	HYD Hose ASM (Pressure #2)
14	140-5285	1	HYD Hose ASM (Return #2)
15	139-6535	1	Hose ASM Case 2
16	140-5286	1	HYD Hose ASM (Pressure #1)
17	140-5287	1	HYD Hose ASM (Return #1)
18	139-6534	1	Hose ASM Case 1
19	3290-379	2	Tie-Cable

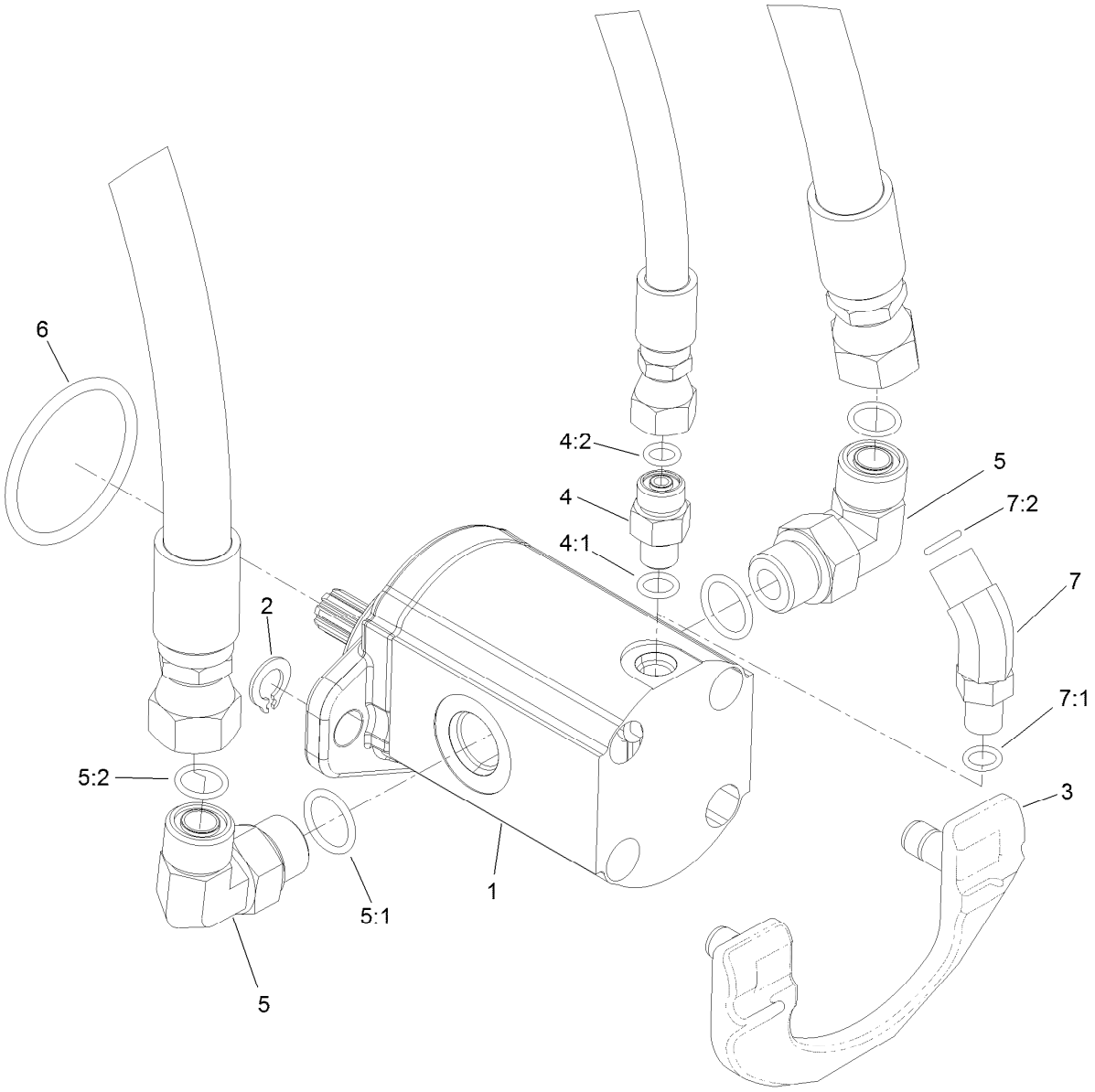

Hydraulic Mow
Reel Motor Assembly

Ref.	*Part Number*	*Qty.*	*Description*
1	115-3321	3	HYD Reel Motor ASM
2	133-8926	6	Ring-Retaining (Metric)
3	115-5389	3	Cam-Mount, Motor
4	340-92	2	Fitting-Straight
4:1	237-78	1	O-Ring
4:2	237-21	1	O-Ring
5	340-98	6	Fitting-Elbow, 90 DEG
5:1	237-79	1	O-Ring
5:2	237-30	1	O-Ring
6	115-3298	3	O-Ring
7	340-103	1	Fitting-HYD, 45 DEG
7:1	237-78	1	O-Ring
7:2	237-21	1	O-Ring

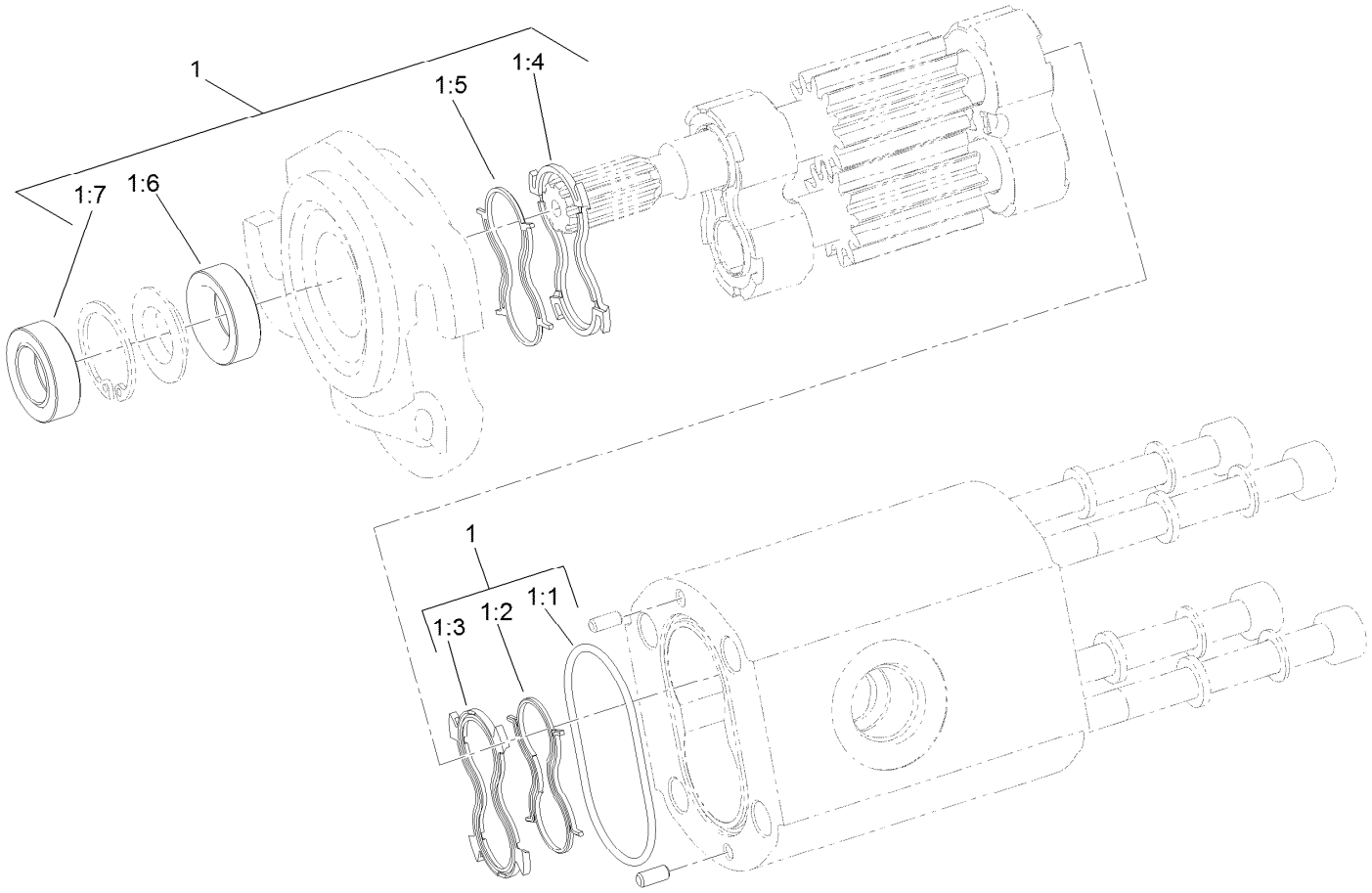

Hydraulic Reel Motor Assembly No. 115-3321

Ref.	*Part Number*	*Qty.*	*Description*
1	119-7113	1	Seal Kit
1:1		1	O-Ring Housing ●
1:2		1	Seal-Anti Extrusion ●
1:3		1	Seal-Plate, Balancing ●
1:4		1	Seal-Plate, Balancing ●
1:5		1	Seal-Anti Extrusion ●
1:6		1	Seal-Shaft (Inboard) ●
1:7		1	Seal-Shaft (Outboard) ●

● Not serviced separately

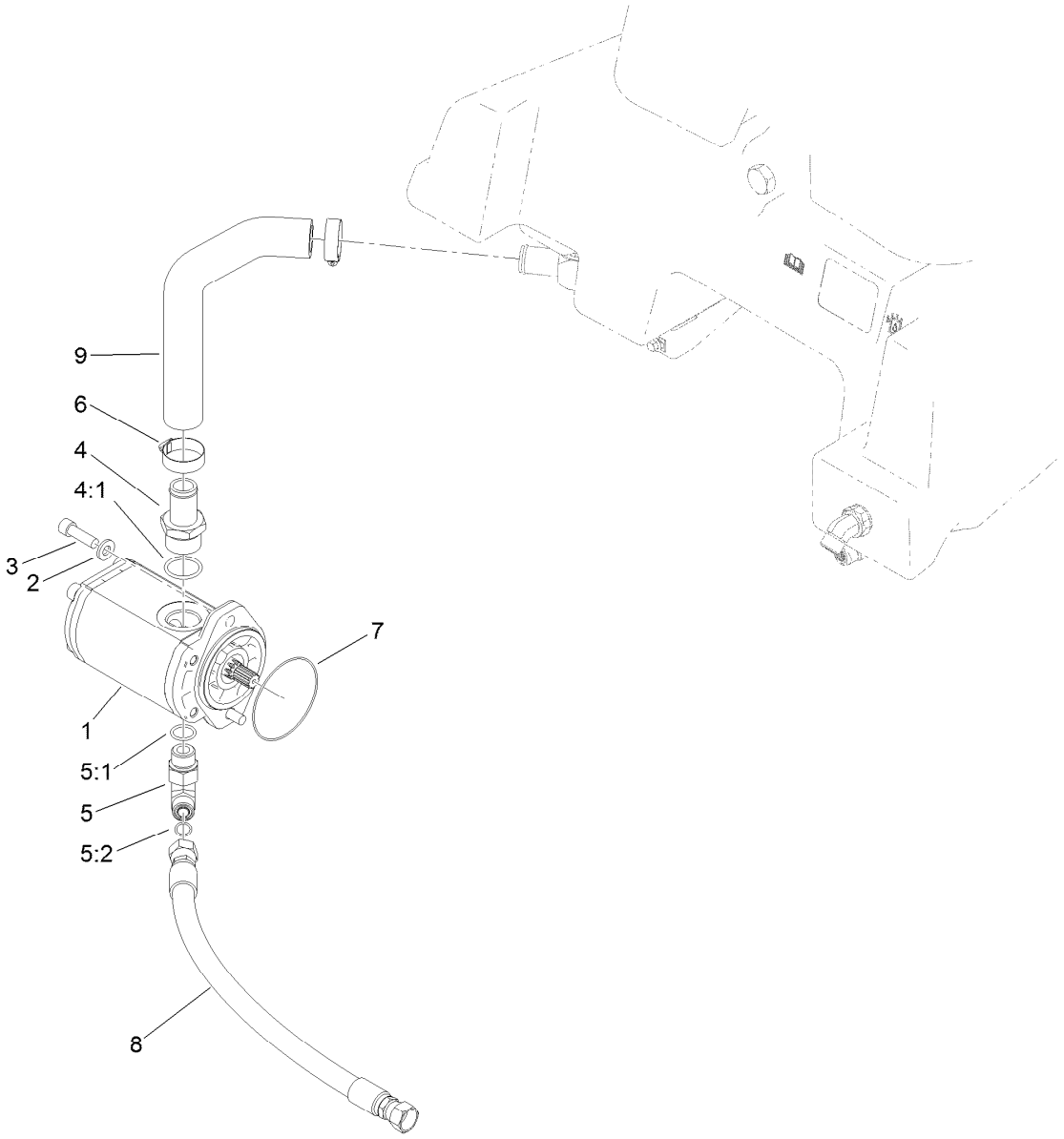

Hydraulic Mow
Gear Pump Assembly

Ref.	*Part Number*	*Qty.*	*Description*
1	114-9956	1	HYD Gear Pump ASM
2	100-4852	2	Washer-Hardened
3	AU862-10030	2	Screw-HSH
4	354-78	1	Fitting-STR
4:1	237-146	1	O-Ring
5	340-105	1	Fitting-Elbow, 90 DEG
5:1	237-80	1	O-Ring
5:2	237-30	1	O-Ring
6	2412-34	2	Clamp-Hose
7	237-161	1	O-Ring
8	119-2075	1	Hose-HYD
9	119-4477	1	Hose-Inlet

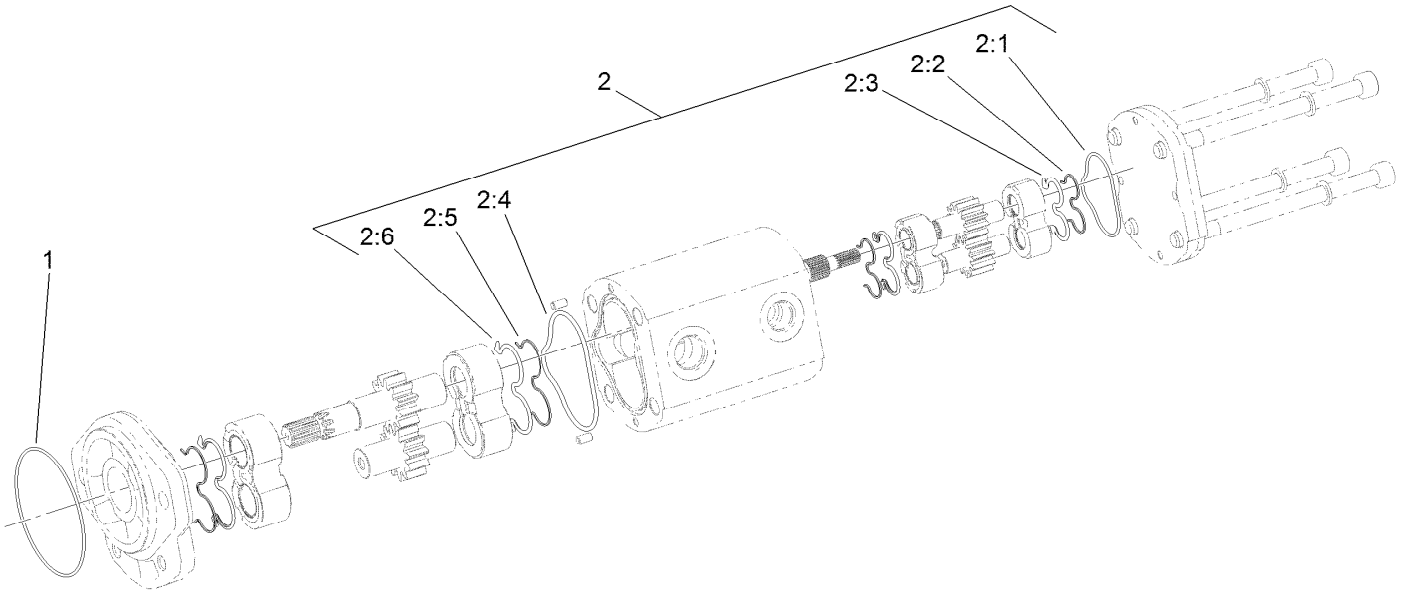

Hydraulic Gear Pump Assembly No. 114-9956

Ref.	*Part Number*	*Qty.*	*Description*
1	353-949	1	O-Ring
2	119-7134	1	Kit-Seal
2:1		1	O-Ring ●
2:2		2	Seal-Extrusion, Anti ●
2:3		2	Seal-Backup ●
2:4		1	O-Ring ●
2:5		2	Seal-Extrusion, Anti ●
2:6		2	Seal-Backup ●

● Not serviced separately

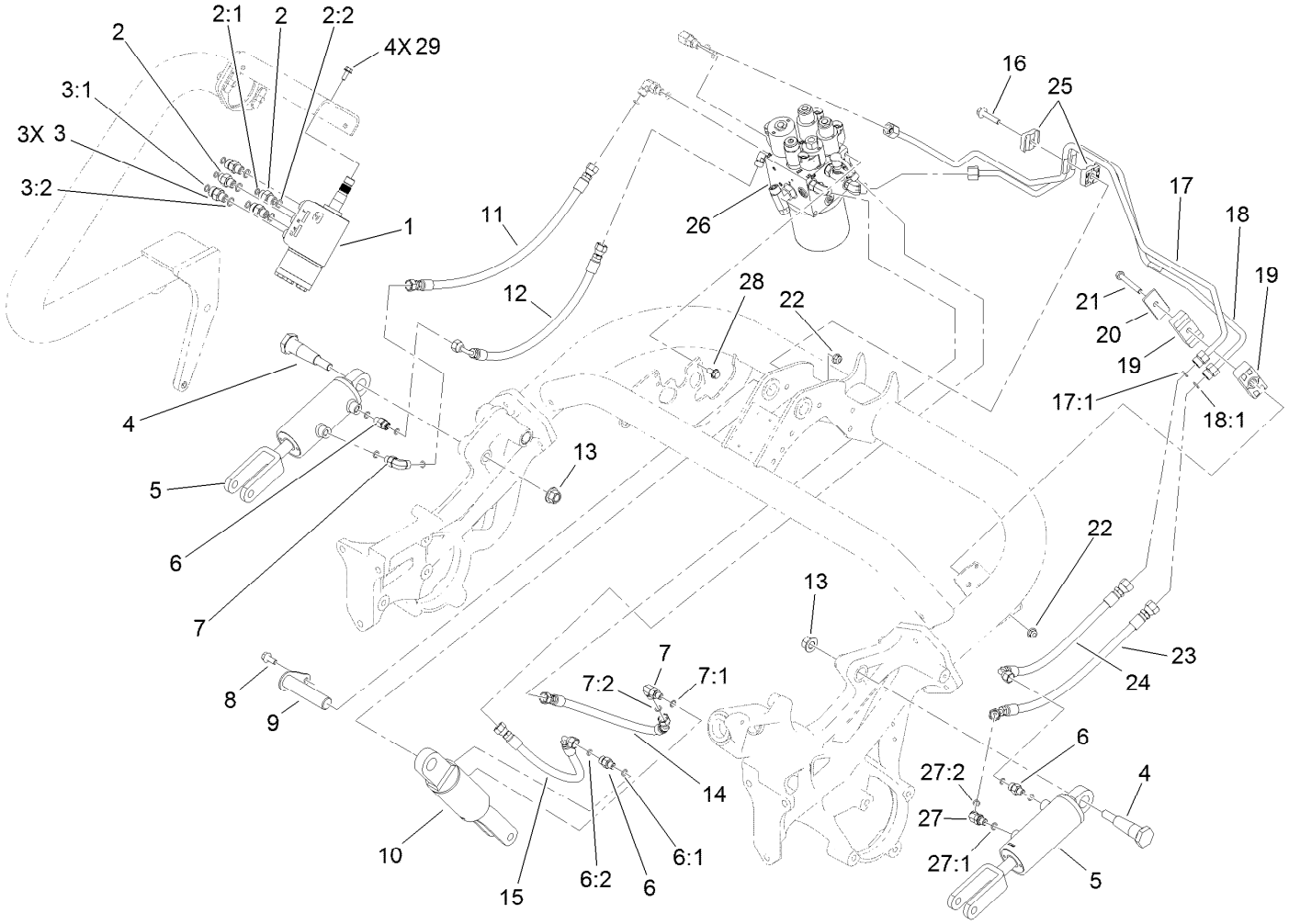

Lift Circuit Assembly

Ref.	Part Number	Qty.	Description
1	114-4672	1	Steering Valve ASM
2	340-1	2	Fitting-Straight
2:1	237-21	1	O-Ring
2:2	237-42	1	O-Ring
3	340-2	3	Fitting-Straight
3:1	237-22	1	O-Ring
3:2	237-42	1	O-Ring
4	112-5709	2	Pin-Tapered
5	119-8129	2	No. 2 And 3 HYD Cylinder ASM
6	340-92	3	Fitting-Straight
6:1	237-78	1	O-Ring
6:2	237-21	1	O-Ring
7	340-132	2	Fitting-Elbow, 90 DEG
7:1	237-78	1	O-Ring
7:2	237-21	1	O-Ring
8	3234-47	1	Screw-HHF
9	119-8104	1	Pin

Ref.	Part Number	Qty.	Description
10	119-8128	1	No. 1 HYD Cylinder ASM
11	119-2052	1	Hose-HYD
12	119-2053	1	Hose-HYD
13	99-5107	2	Nut-HF Nylock
14	119-2051	1	Hose-HYD
15	119-2050	1	Hose-HYD
16	115-1794	1	Screw-HHF
17	119-8126	1	HYD Tube ASM
17:1	237-22	1	O-Ring
18	119-8127	1	HYD Tube ASM
18:1	237-22	1	O-Ring
19	120-3200	2	Clamp-Tube
20	69-9761	1	Plate-Cover
21	322-12	1	Screw-HH
22	104-8300	3	Nut-HF, NI
23	119-2066	1	Hose-HYD
24	119-2065	1	Hose-HYD
25	56-7973	2	Clamp-Tube

● Not serviced separately

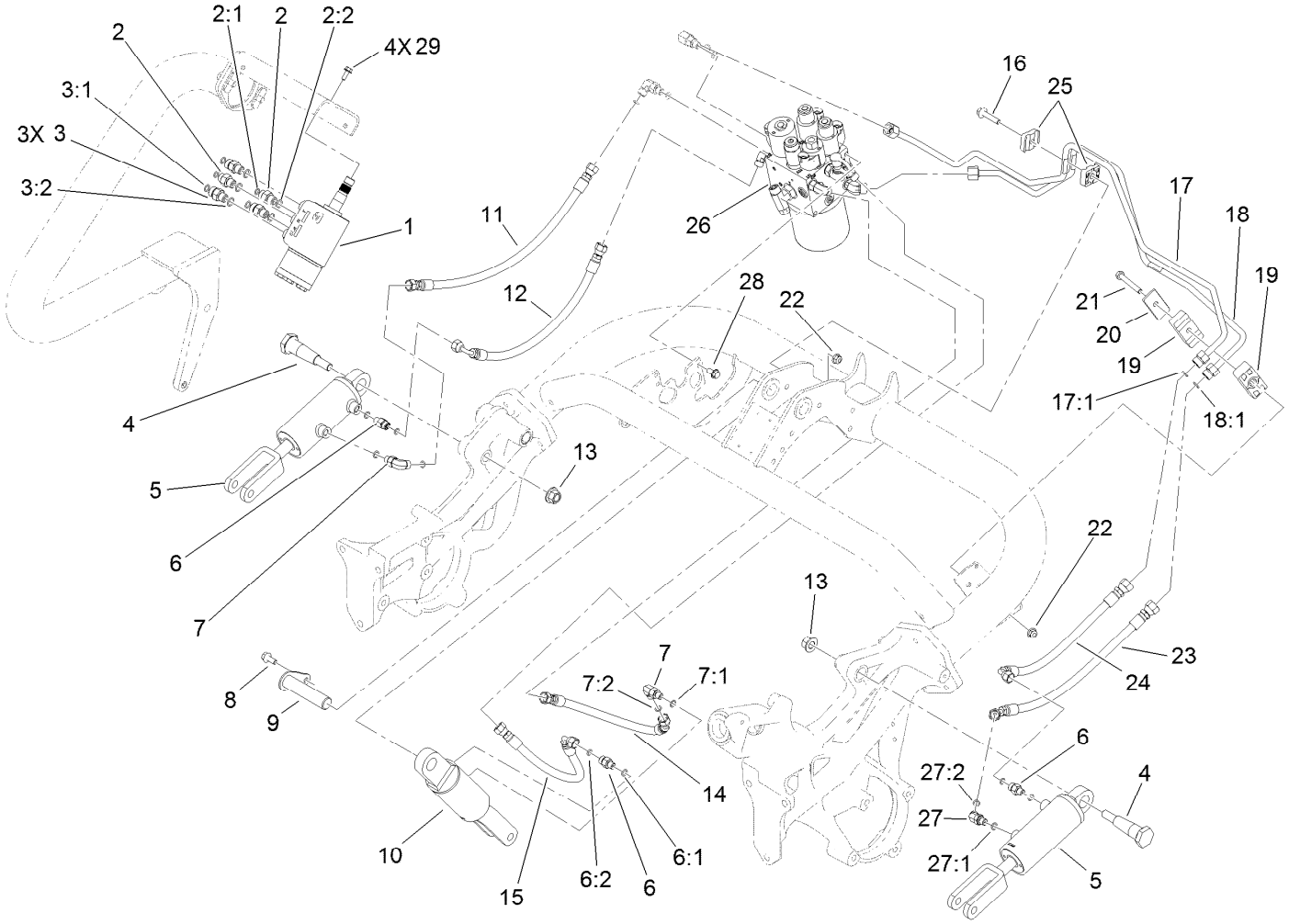

Lift Circuit Assembly (continued)

Ref.	Part Number	Qty.	Description
26		1	Hydraulic Lift Manifold ASM ●
27	340-103	1	Fitting-HYD, 45 DEG
27:1	237-78	1	O-Ring
27:2	237-21	1	O-Ring
28	3234-7	2	Screw-HHF
29	33103-016	4	Screw-HHF

● Not serviced separately

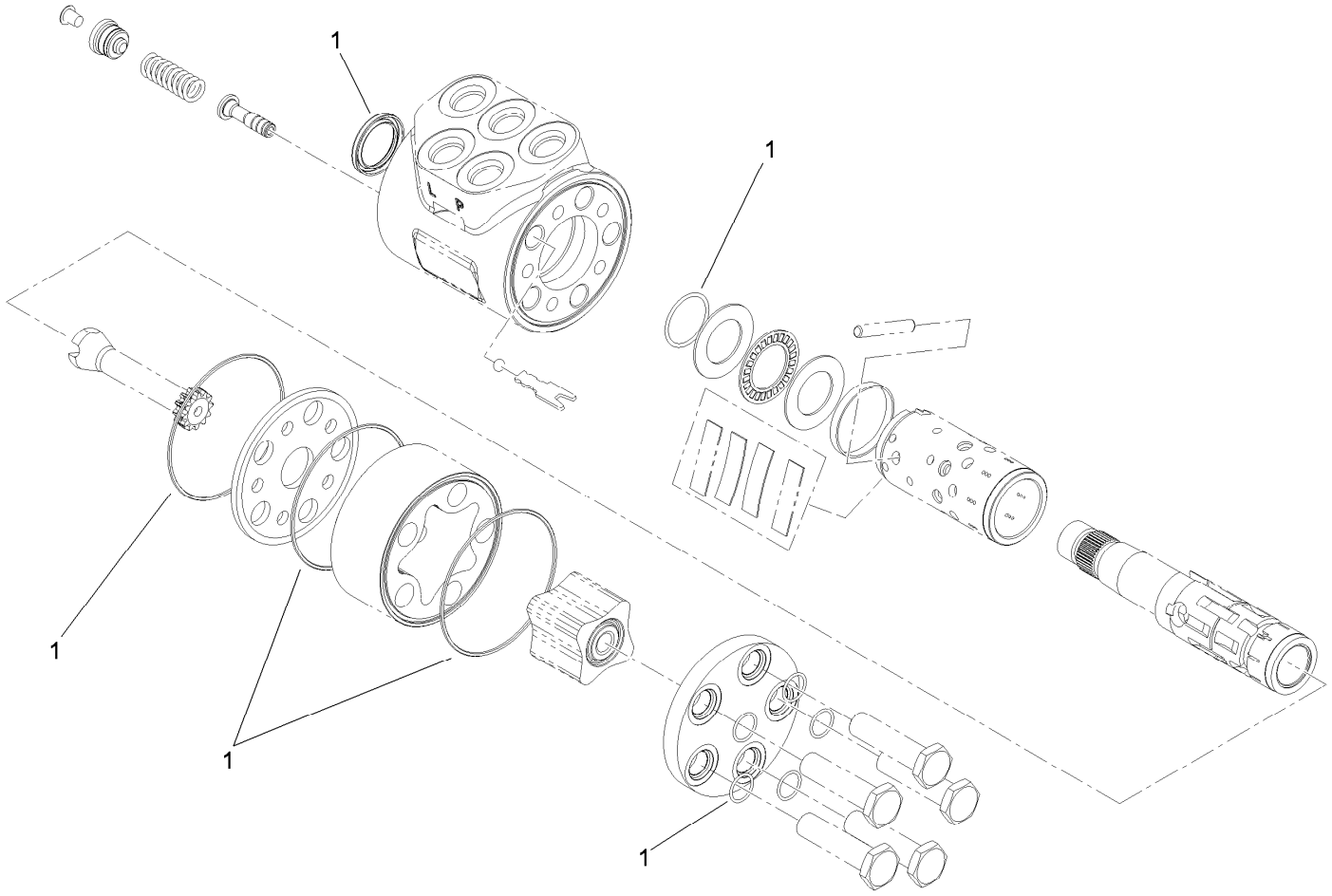

Steering Valve Assembly No. 114-4672

Ref.	*Part Number*	*Qty.*	*Description*
1	106-6716	1	Seal Kit

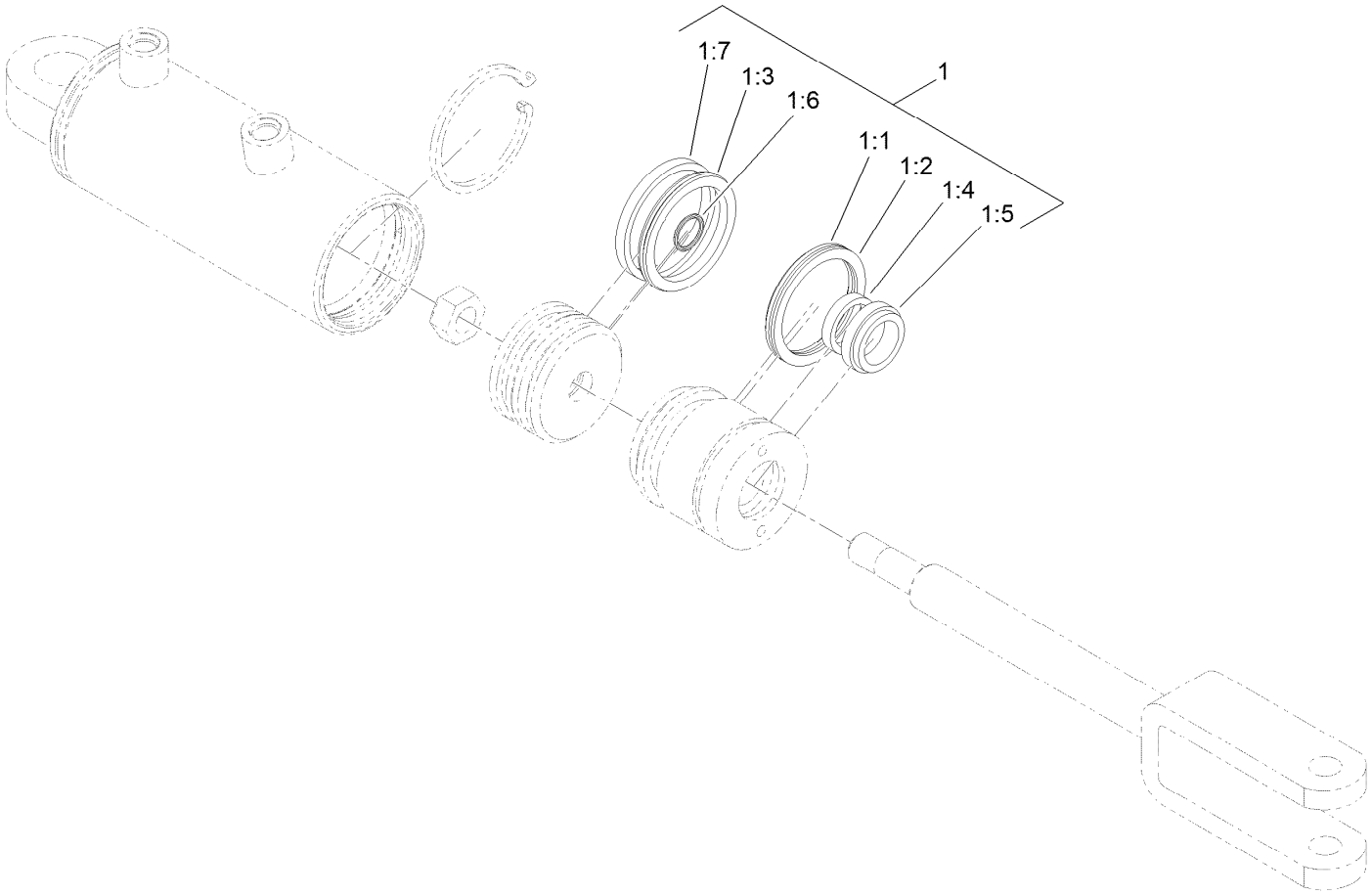

Hydraulic Cylinder Assembly No. 119-8129

Ref.	*Part Number*	*Qty.*	*Description*
1	115-3410	1	Seal Kit
1:1		1	O-Ring ●
1:2		1	Backup ●
1:3		1	Bp Seal ●
1:4		1	Bs Seal ●
1:5		1	Seal-Dust ●
1:6		1	O-Ring ●
1:7		1	Ring-Wear ●

● Not serviced separately

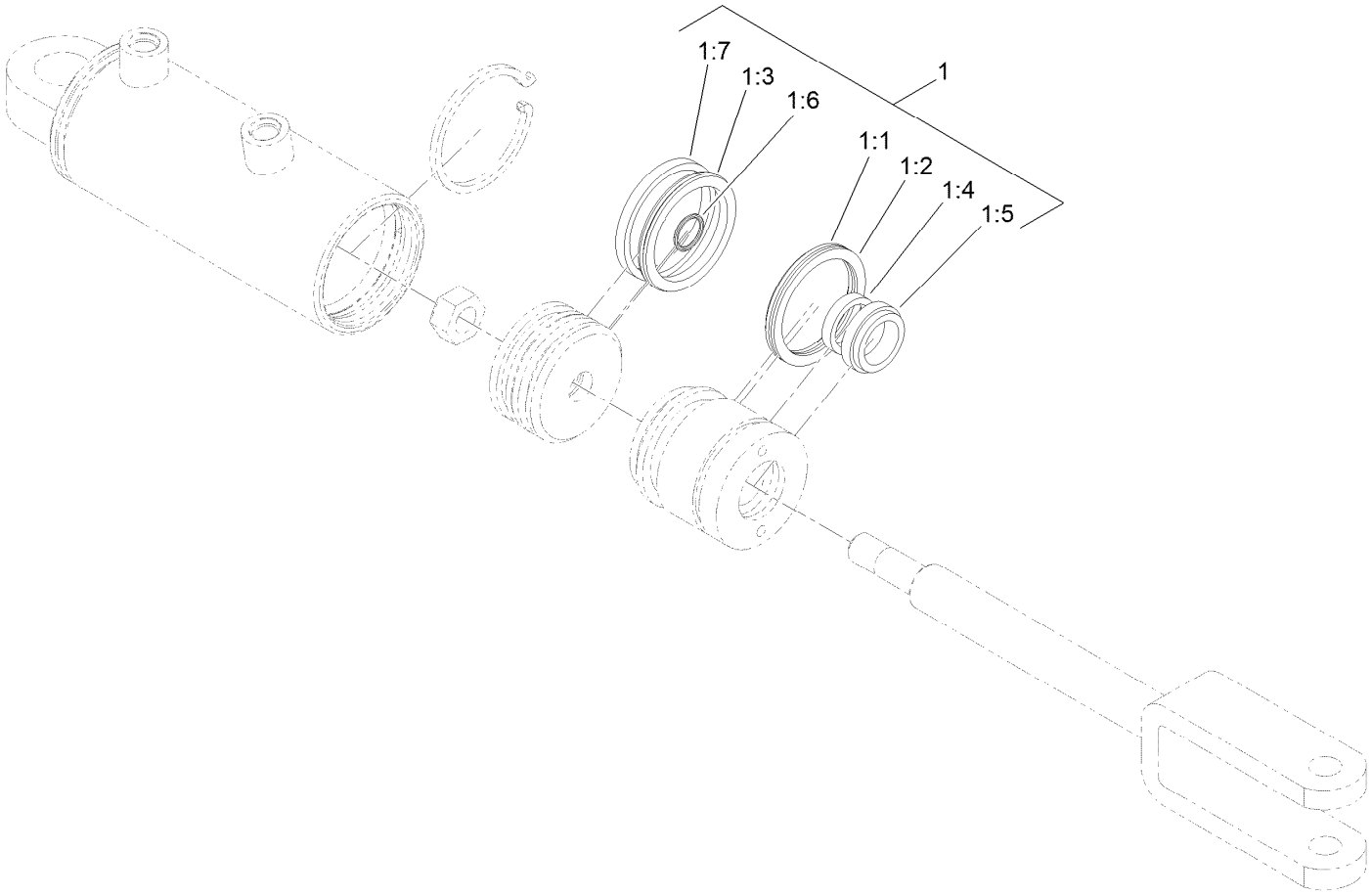

Hydraulic Cylinder Assembly No. 119-8128

Ref.	*Part Number*	*Qty.*	*Description*
1	115-3410	1	Seal Kit
1:1		1	O-Ring ●
1:2		1	Backup ●
1:3		1	Bp Seal ●
1:4		1	Bs Seal ●
1:5		1	Seal-Dust ●
1:6		1	O-Ring ●
1:7		1	Ring-Wear ●

● Not serviced separately

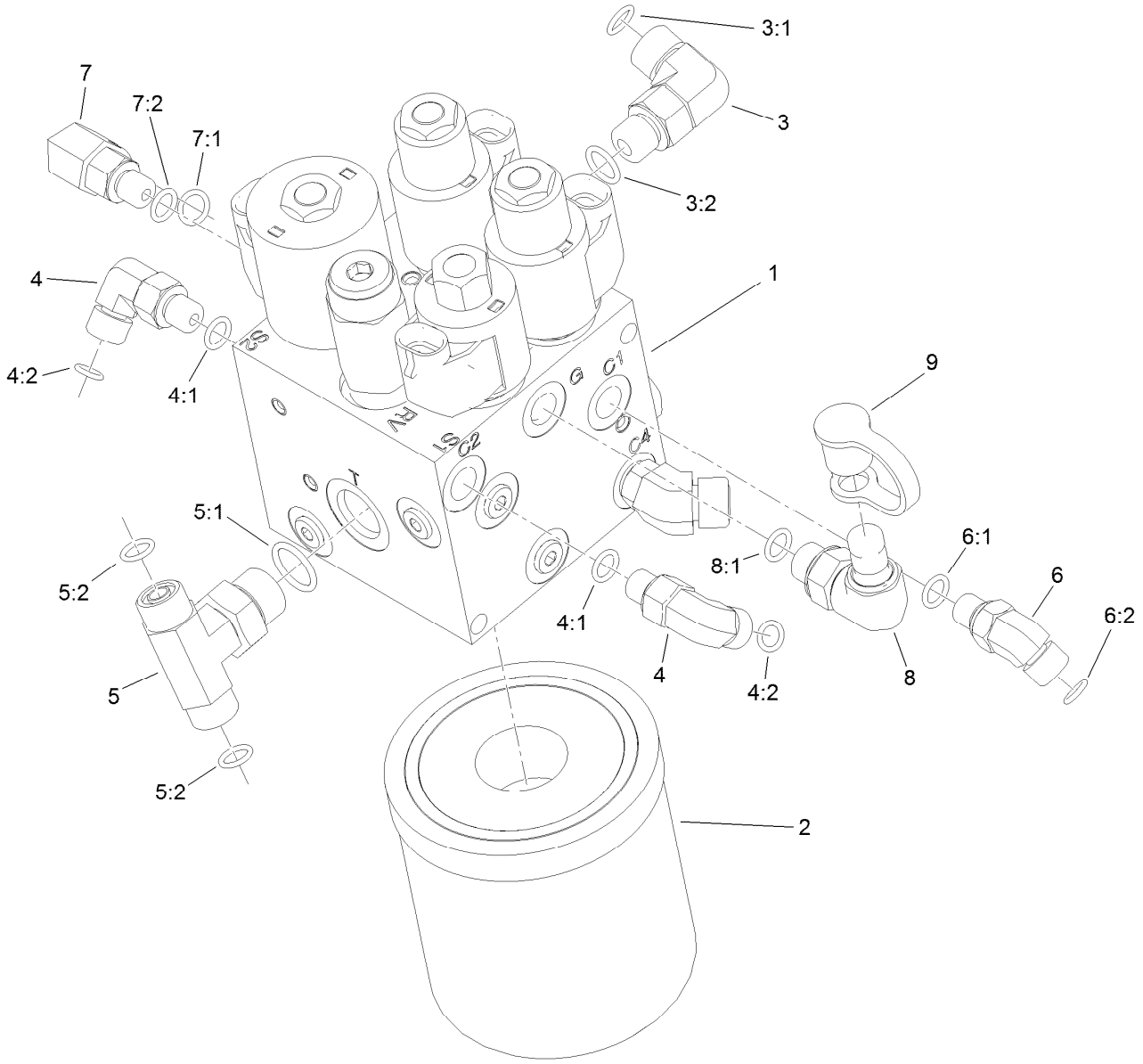

Hydraulic Lift Manifold Assembly

Ref.	Part Number	Qty.	Description
1	125-5187	1	Manifold-Lift, HYD
2	108-5194	1	Filter-Oil, HYD
3	340-77	1	Fitting-Elbow, 90 DEG
3:1	237-22	1	O-Ring
3:2	237-42	1	O-Ring
4	340-132	2	Fitting-Elbow, 90 DEG
4:1	237-78	1	O-Ring
4:2	237-21	1	O-Ring
5	92-4799	1	Fitting-Tee, HYD
5:1	237-79	1	O-Ring

Ref.	Part Number	Qty.	Description
5:2	237-22	2	O-Ring
6	340-103	1	Fitting-HYD, 45 DEG
6:1	237-78	1	O-Ring
6:2	237-21	1	O-Ring
7	340-97	1	Fitting-Elbow, 90 DEG
7:1	237-22	1	O-Ring
7:2	237-78	1	O-Ring
8	115-9147	1	Fitting-Elbow, 90 DEG
8:1	237-78	1	O-Ring
9	354-79	1	Cap-Dust

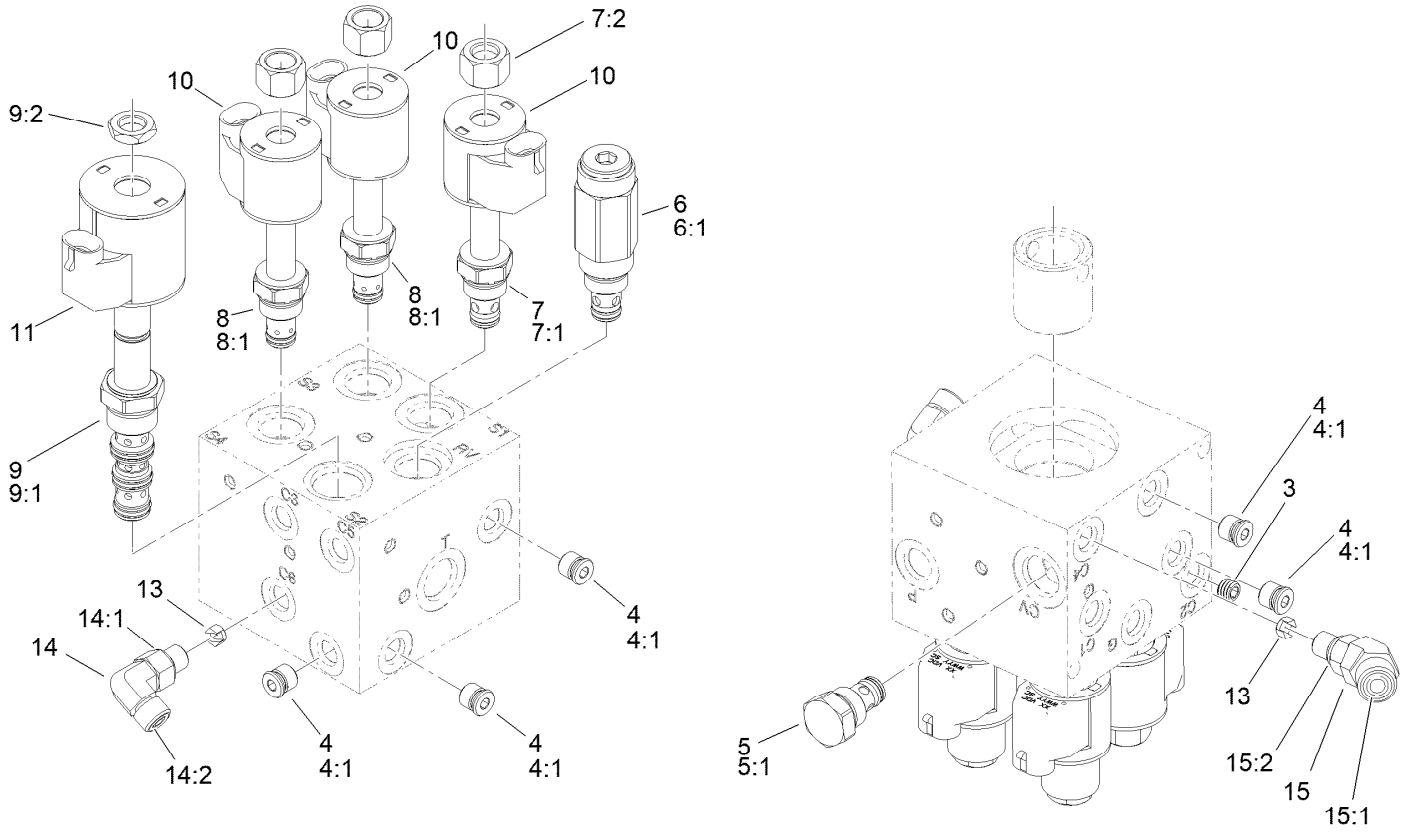

Hydraulic Lift Manifold Assembly No. 125-5187

Ref.	*Part Number*	*Qty.*	*Description*
3	119-7144	1	Orifice (.037 Inch)
4	353-990	5	Plug ASM
4:1	237-78	1	O-Ring
5	107-7524	1	Check Valve ASM
5:1	105-9156	1	Seal Kit
6	112-9207	1	Valve-Relief
6:1	105-9156	1	Seal Kit
7	107-7517	1	Valve-Solenoid
7:1	105-9156	1	Seal Kit
7:2	107-7812	1	Nut-Solenoid
8	147-3090	2	Valve-Solenoid
8:1	107-7527	1	Seal Kit

Ref.	*Part Number*	*Qty.*	*Description*
9	110-8906	1	Valve-Solenoid
9:1	110-8908	1	Spool Valve Seal Kit
9:2	110-2634	1	Nut-Coil
10	110-0497	3	Coil-Solenoid
11	110-6344	1	Coil-12V, DC
13	125-5211	2	Orifice-Control, Flow (0.030)
14	340-132	1	Fitting-Elbow, 90 DEG
14:1	237-78	1	O-Ring
14:2	237-21	1	O-Ring
15	340-54	1	Elbow-45 DEG
15:1	237-22	1	O-Ring
15:2	237-78	1	O-Ring

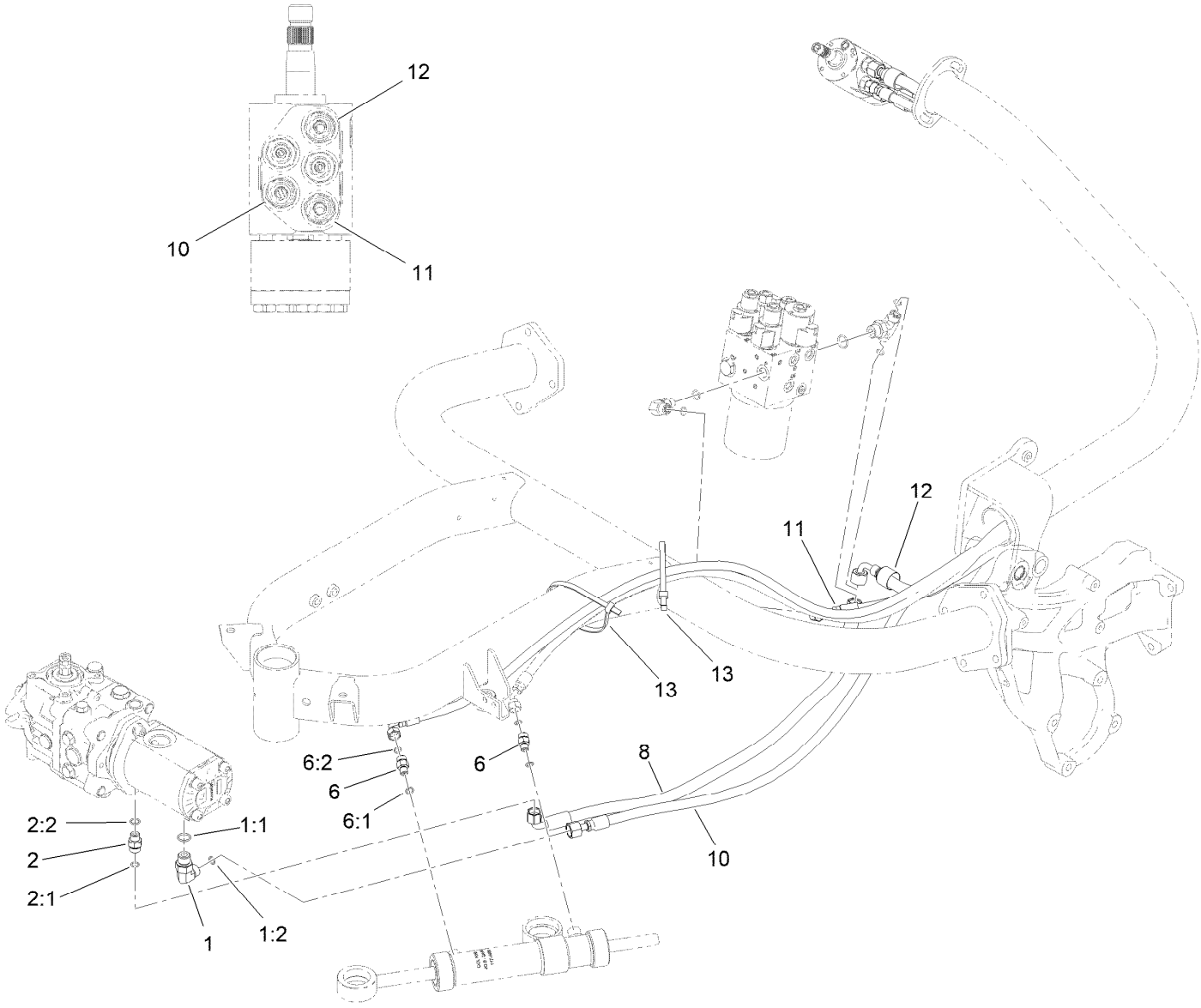

Steering Circuit Assembly (1)

Ref.	*Part Number*	*Qty.*	*Description*
1	340-18	1	Fitting-HYD, 90 DEG
1:1	237-79	1	O-Ring
1:2	237-22	1	O-Ring
2	340-2	1	Fitting-Straight
2:1	237-22	1	O-Ring
2:2	237-42	1	O-Ring
6	340-92	2	Fitting-Straight
6:1	237-78	1	O-Ring
6:2	237-21	1	O-Ring
8	140-5230	1	Hose ASM
10	145-0056	1	HYD Hose ASM
11	117-3683	1	Hose-HYD
12	140-5270	1	Hose ASM, HYD
13	3334-945	2	Tie-Cable

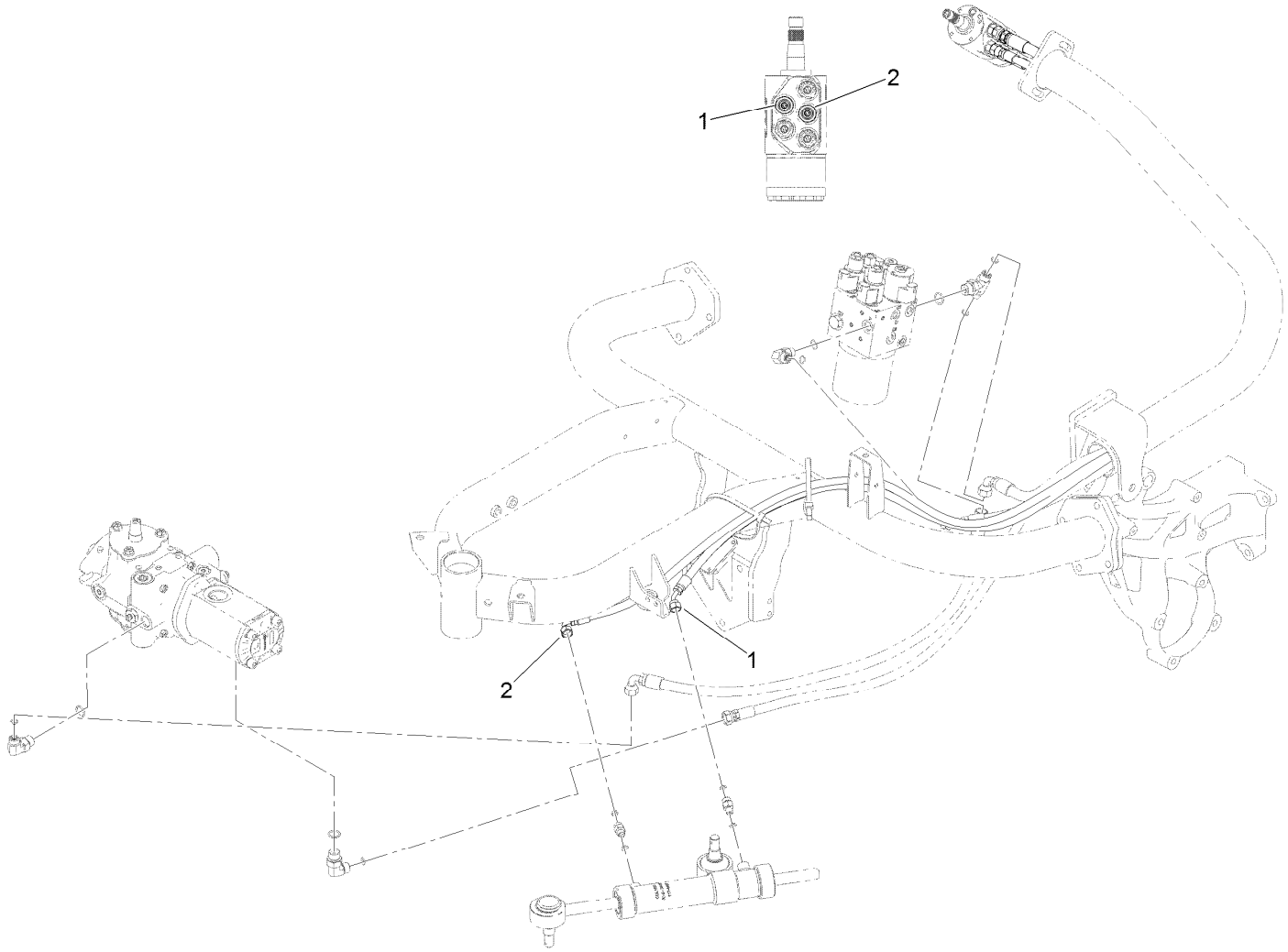

Steering Circuit Assembly (3)

Ref.	*Part Number*	*Qty.*	*Description*
1	117-3685	1	Hose-HYD
2	117-3688	1	Hose-HYD

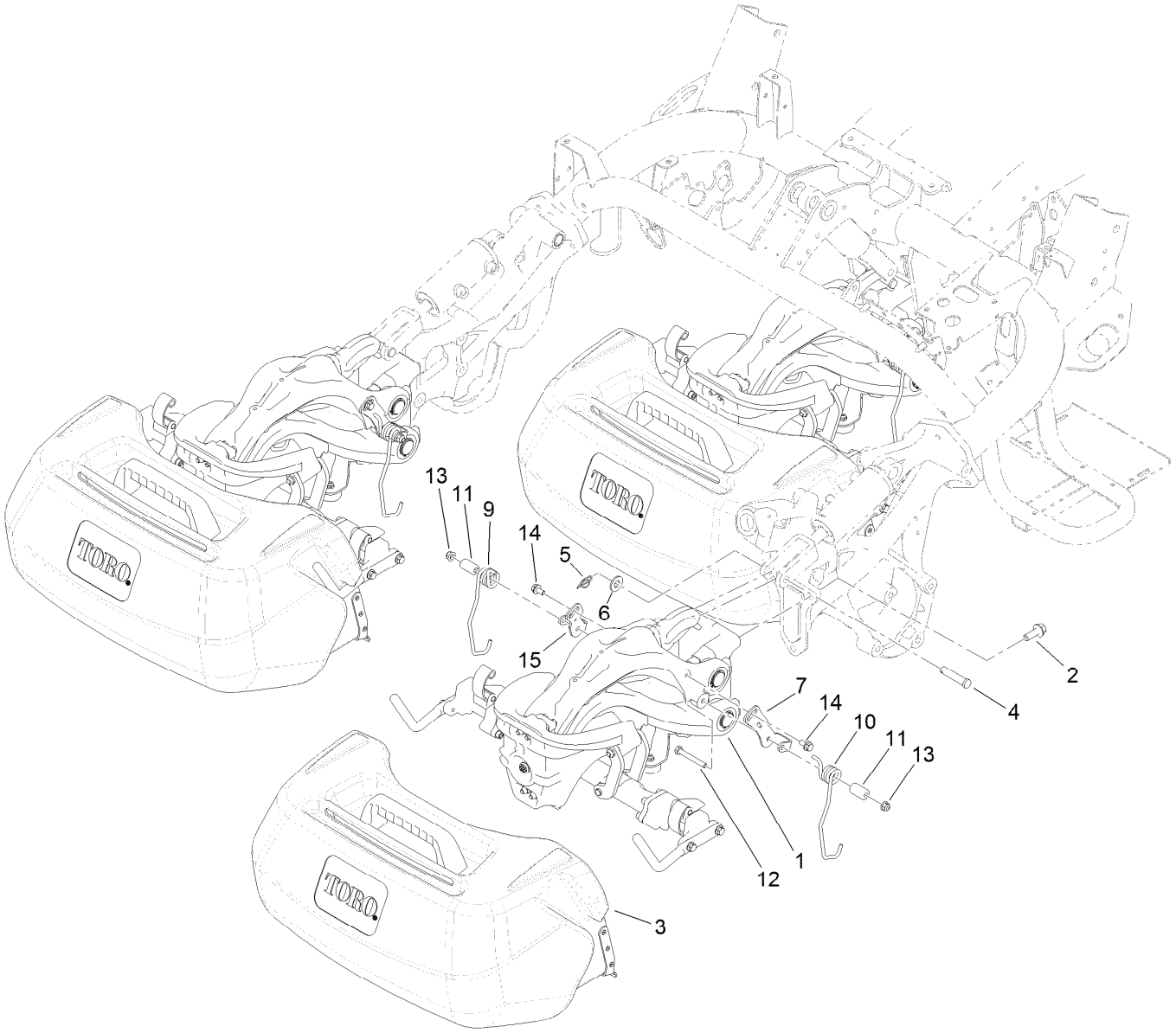

Suspension and Basket Assembly

Ref.	*Part Number*	*Qty.*	*Description*
1		3	Suspension ASM ●
2	117-9035	9	Screw-HHF
3	132-9599	3	Basket ASM
4	92-2739	3	Pin-Clevis
5	112-1491	3	Pin-Cotter
6	29-8910	3	Washer
7	133-8998	3	Retainer-Spring, LH
9	117-6826	3	Spring-Stabilizer, RH
10	117-6827	3	Spring-Stabilizer, LH
11	117-6825	6	Spacer
12	322-12	6	Screw-HH
13	104-8300	6	Nut-HF, NI
14	114-7728	6	Screw-HHF, Patch
15	133-8997	3	Retainer-Spring-RH

● Not serviced separately

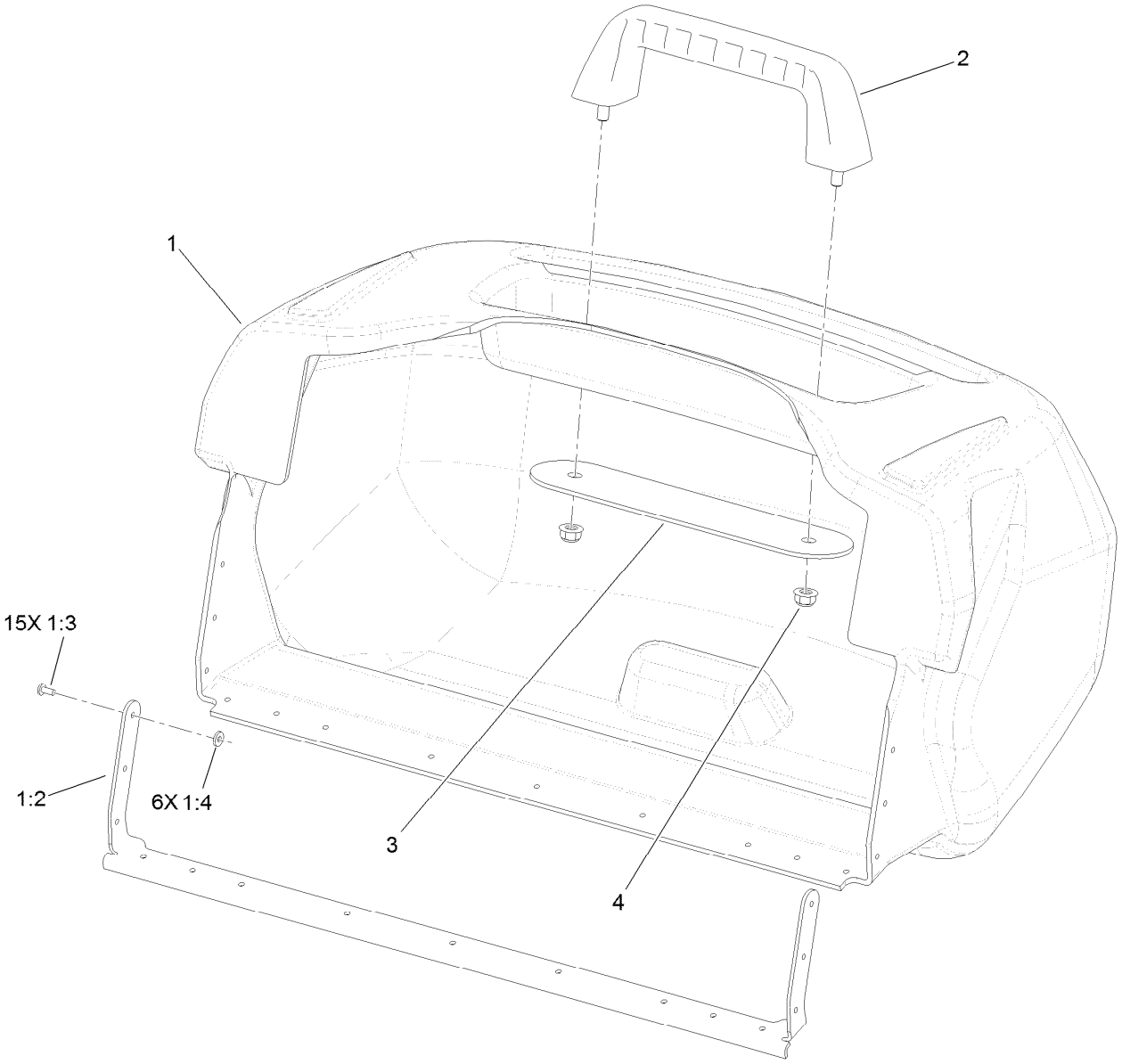

Basket Assembly No. 132-9599

Ref.	*Part Number*	*Qty.*	*Description*
1	132-9510	1	Basket Assembly
1:2	132-3806	1	Support-Basket
1:3	3269-25	15	Rivet-Pop
1:4	3256-75	6	Washer-Flat
2	117-8088	1	Handle-Grab
3	117-8092-03	1	Plate-Mounting
4	104-8300	2	Nut-HF, NI

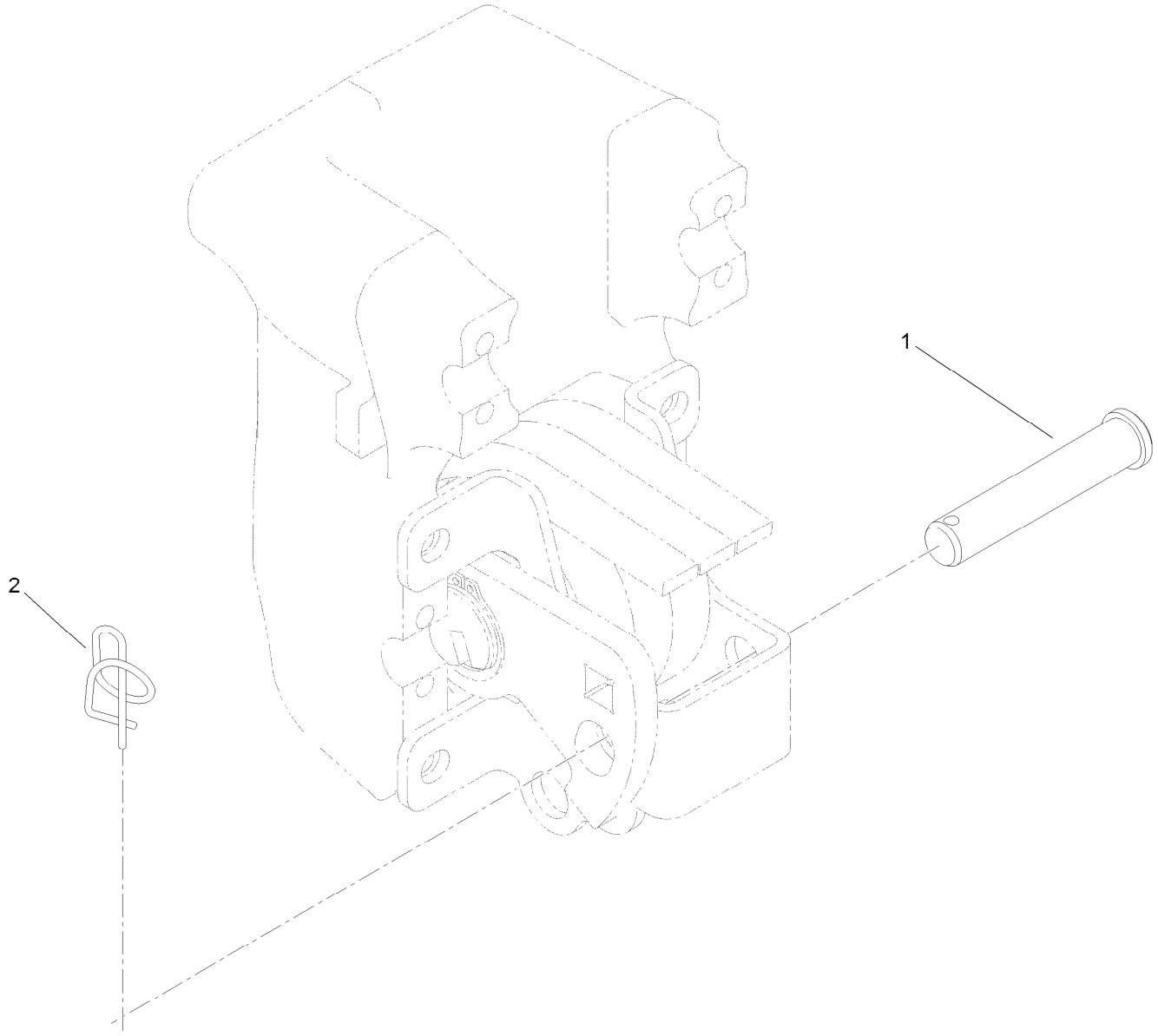

Suspension Pin Position Assembly

Ref.	*Part Number*	*Qty.*	*Description*
1	100-6541	3	Pin-Clevis
2	112-1491	3	Pin-Cotter

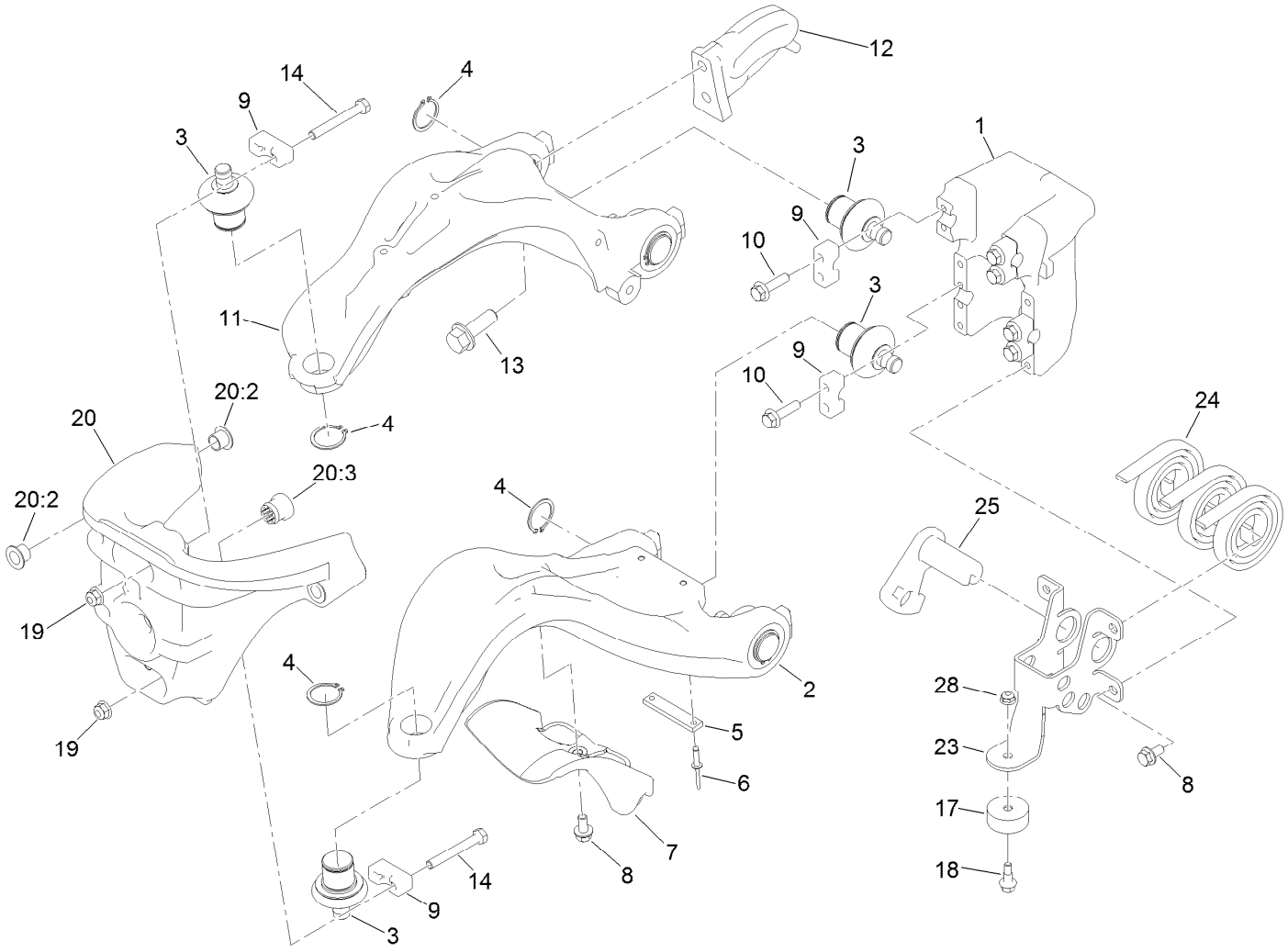

Suspension A-Arm Assembly

Ref.	Part Number	Qty.	Description
1	117-9480	1	Mount-Pivot, A-Arms
2	117-6656	1	A-Arm, Lower
3	132-6959	6	Balljoint
4	120-3225	6	Ring-Retaining, EXT
5	117-6674	1	Plate-Striker
6	3269-28	2	Rivet-Pop
7	117-6755	1	Stop-Steering
8	114-7728	5	Screw-HHF, Patch
9	112-5647	6	Clamp
10	132-3837	8	Screw-HHF
11	139-6452	1	A-Arm, Upper
12	139-8407	1	Plate-Lift

Ref.	Part Number	Qty.	Description
13	100-6116	2	Screw-HHF
14	132-3838	4	Screw-HH
17	133-0308	1	Bumper-Rubber
18	133-0315	1	Screw-Shoulder, HF
19	104-8300	4	Nut-HF, NI
20	120-3216	1	Steering Head ASM
20:2	125-5239	4	Bushing-Flange
20:3	131-1836	1	Grommet
23	140-5232	1	C-Balance Mount
24	114-9306	3	Spring
25	140-5234	1	Tensioner
28	104-7201	1	Nut-HF, NI

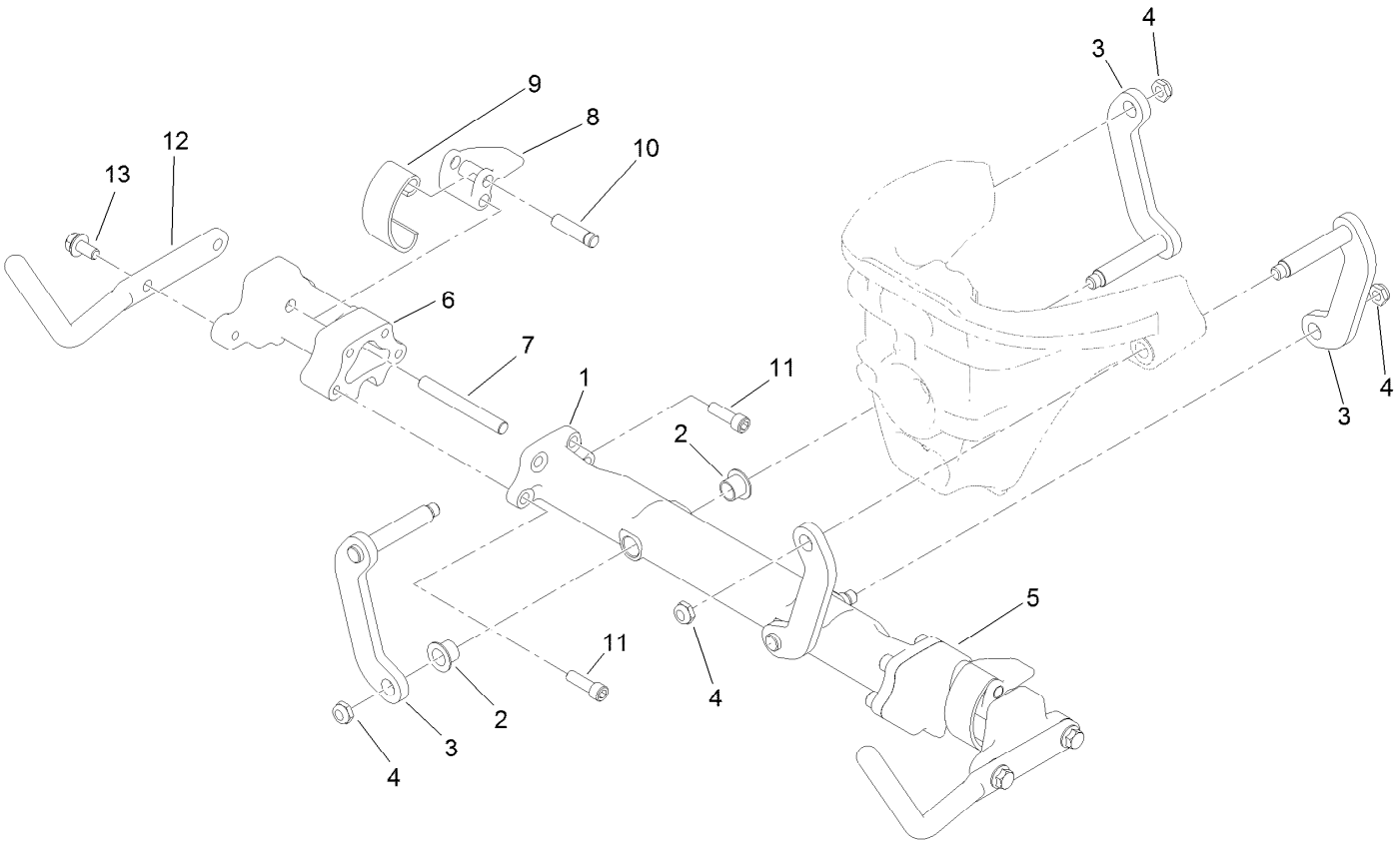

Suspension Crossarm Assembly

Ref.	*Part Number*	*Qty.*	*Description*
1	120-3217	1	Crossarm
2	125-5239	4	Bushing-Flange
3	117-6654	4	Link
4	3296-59	4	Nut-Lock, NI
5	117-9482	1	Mount-Cross Arm, LH
6	117-9492	1	Mount-Cross Arm, RH
7	114-8051	2	Pin-Pivot
8	114-8047	2	Lever
9	114-8048	2	Spring
10	114-8049	2	Pin-Pivot
11	120-3227	8	Screw-HSH
12	120-2784-01	2	Horn-Basket
13	114-7728	4	Screw-HHF, Patch

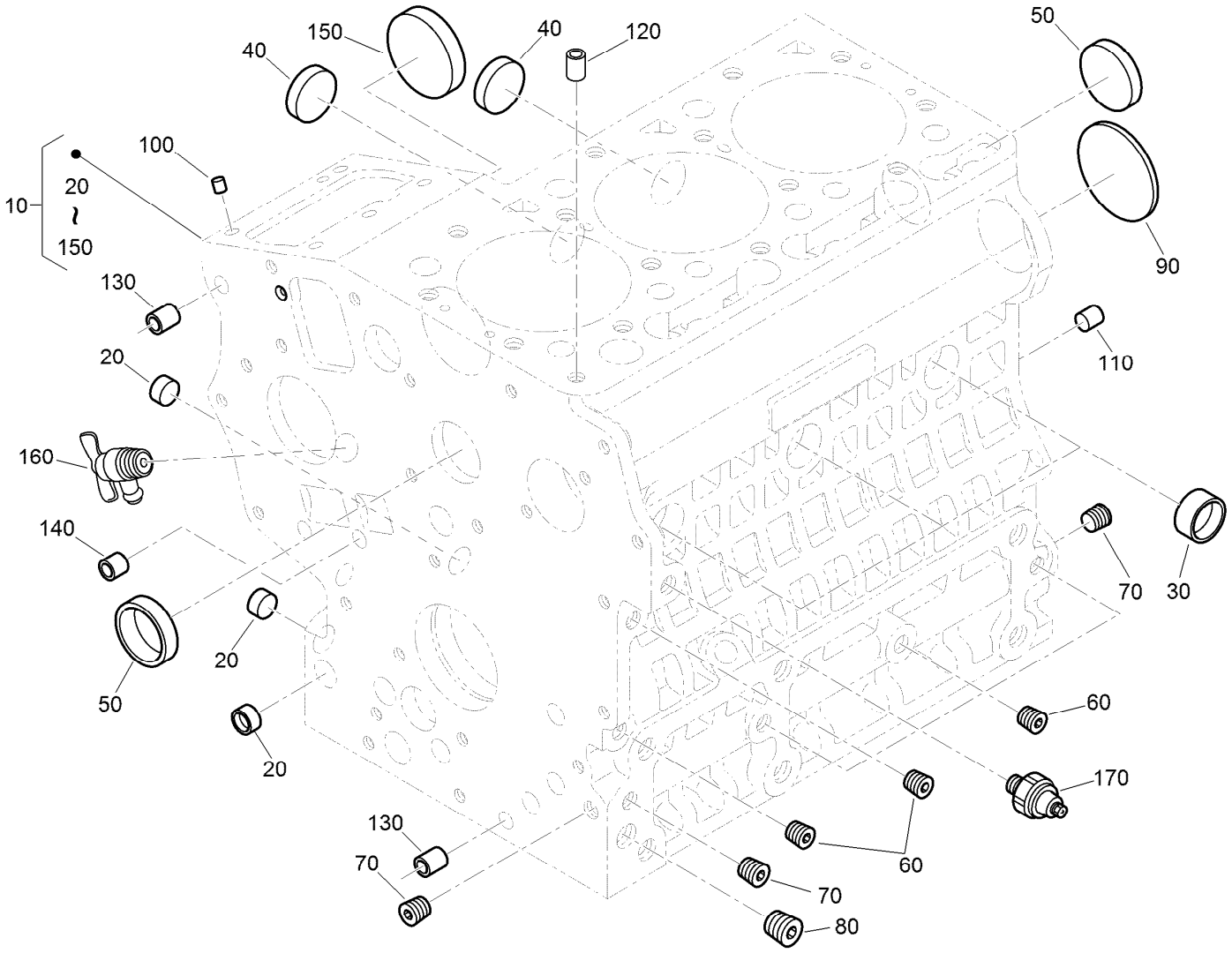

Crankcase Assembly

Ref.	Part Number	Qty.	Description
10	130-1486	1	Crankcase ASM
20	100-2019	3	Cap-Sealing
30	100-2020	3	Cap-Sealing
40	110-3702	2	Cap-Sealing
50	98-9398	2	Cap-Sealing
60	98-9687	5	Plug
70	98-7487	3	Plug
80	98-7488	1	Plug
90	100-1851	1	Plug-Expansion

Ref.	Part Number	Qty.	Description
100	98-9375	2	Pin-Straight
110	98-9377	2	Pin-Straight
120	98-7506	1	Pin-Pipe
130	100-2051	2	Pin-Pipe
140	100-2051	2	Pin-Pipe
150	100-1991	1	Cover-Fuel, Camshaft
160	120-3121	1	Draincock ASM
170	98-7764	1	Switch-Oil

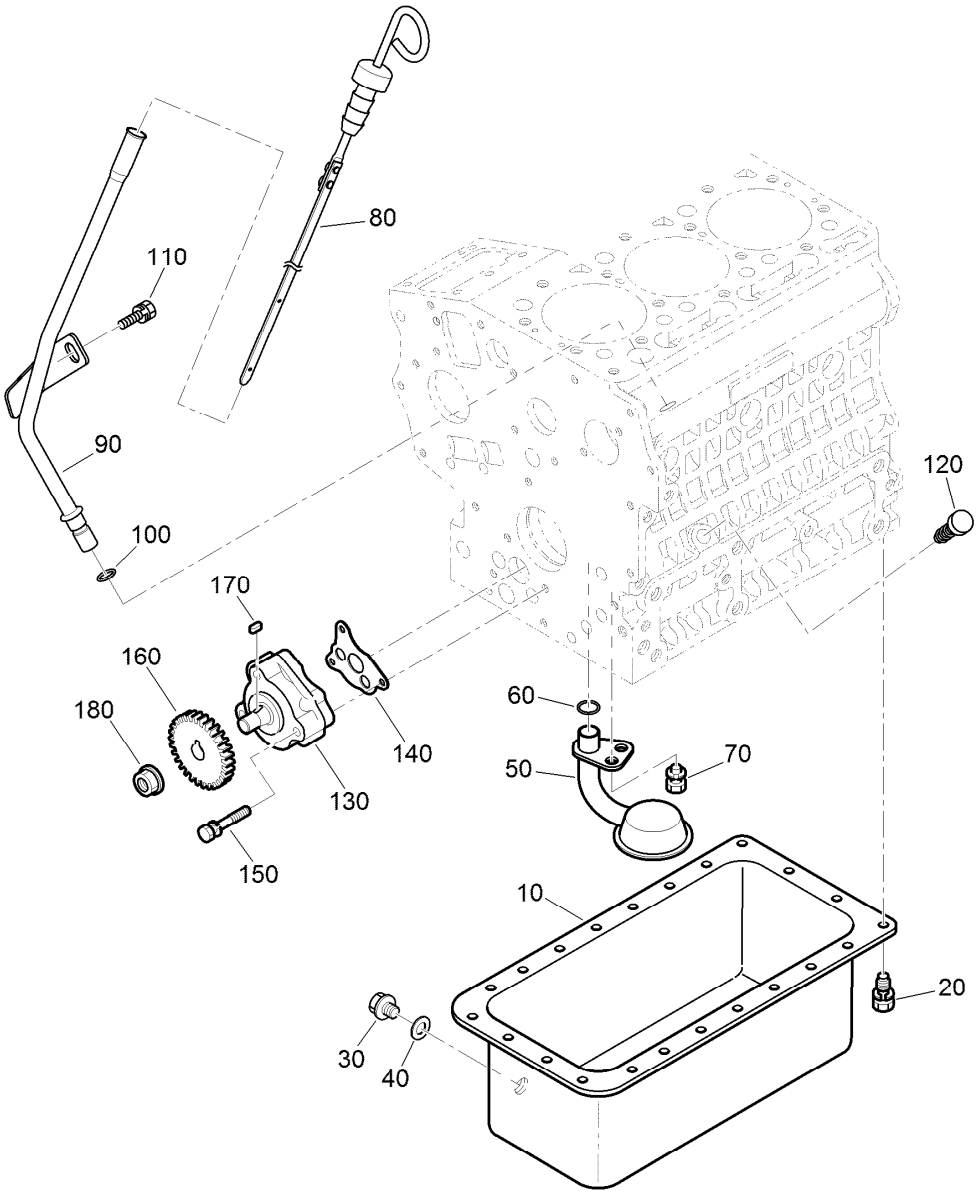

Oil Pan, Oil Pump and Dipstick Assembly

Ref.	Part Number	Qty.	Description
10	120-3122	1	Oil Pan ASM
20	98-9350	22	Bolt
30	114-8151	1	Plug-Drain
40	98-7524	1	Gasket
50	100-2001	1	Strainer-Pickup, Oil
60	105-3776	1	O-Ring
70	100-9195	1	Bolt
80	120-3124	1	Gauge-Oil
90	120-3125	1	Guide-Gauge, Oil

Ref.	Part Number	Qty.	Description
100	98-9722	1	O-Ring
110	115-8504	1	Bolt-Flange
120	110-3720	1	Plug-Gauge, Oil
130	100-2002	1	Oil Pump ASM
140	100-2003	1	Gasket-Pump, Oil
150	100-1923	3	Bolt
160	130-1419	1	Gear-Drive, Oil Pump
170	98-7658	1	Key-Feather
180	100-1779	1	Nut-Flange

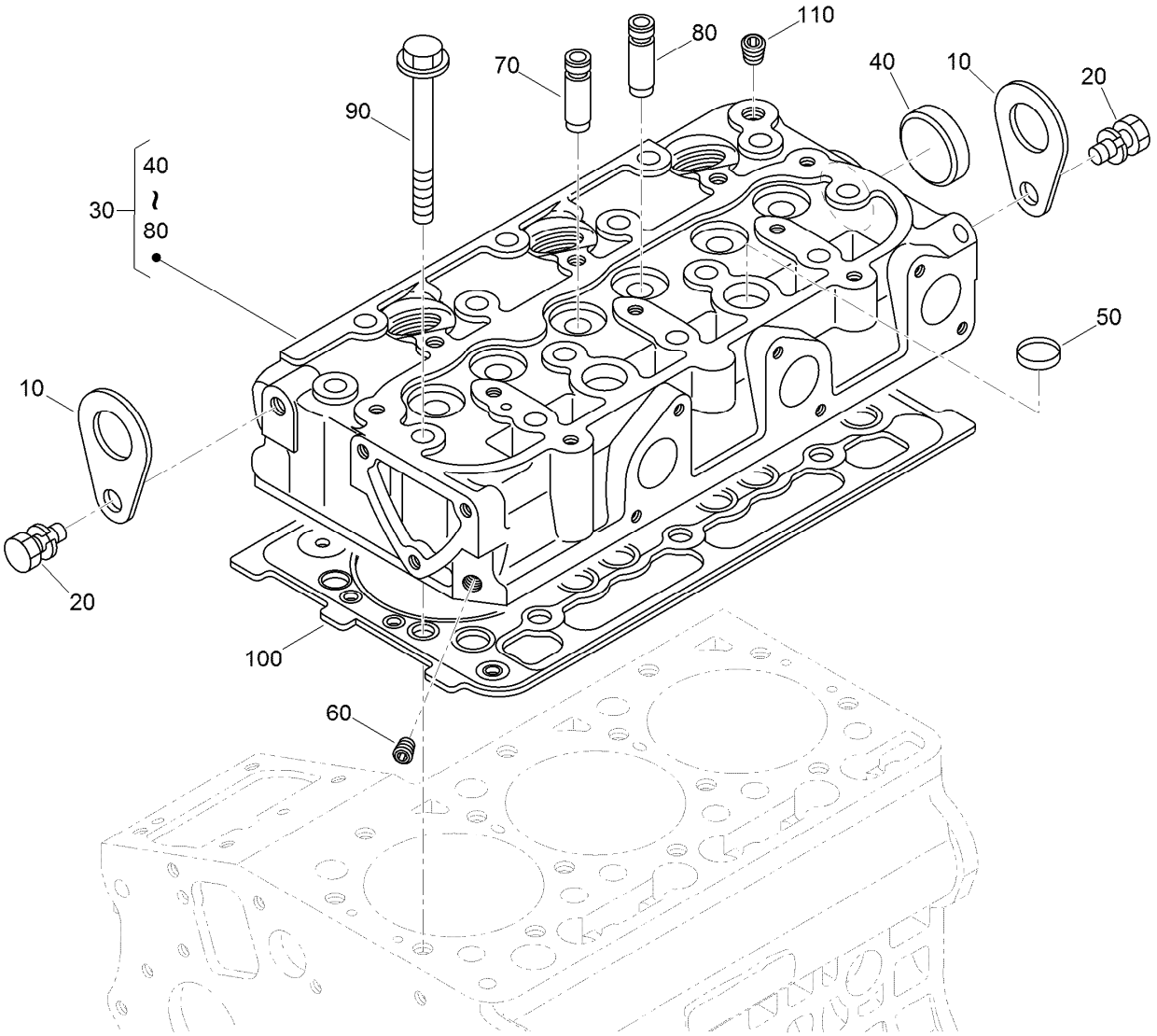

Cylinder Head Assembly

Ref.	*Part Number*	*Qty.*	*Description*
10	98-7531	2	Hook-Engine
20	98-7526	2	Bolt
30	130-1504	1	Cylinder Head ASM
40	105-3705	1	Cap-Sealing
50	98-9389	2	Cap-Sealing
60	98-9687	1	Plug
70	100-1882	3	Guide-Valve, Inlet
80	100-1883	3	Guide-Valve, Exhaust
90	100-1820	14	Bolt-Head, Cylinder
100	112-2520	1	Gasket-Head, Cylinder
110	98-9444	1	Plug

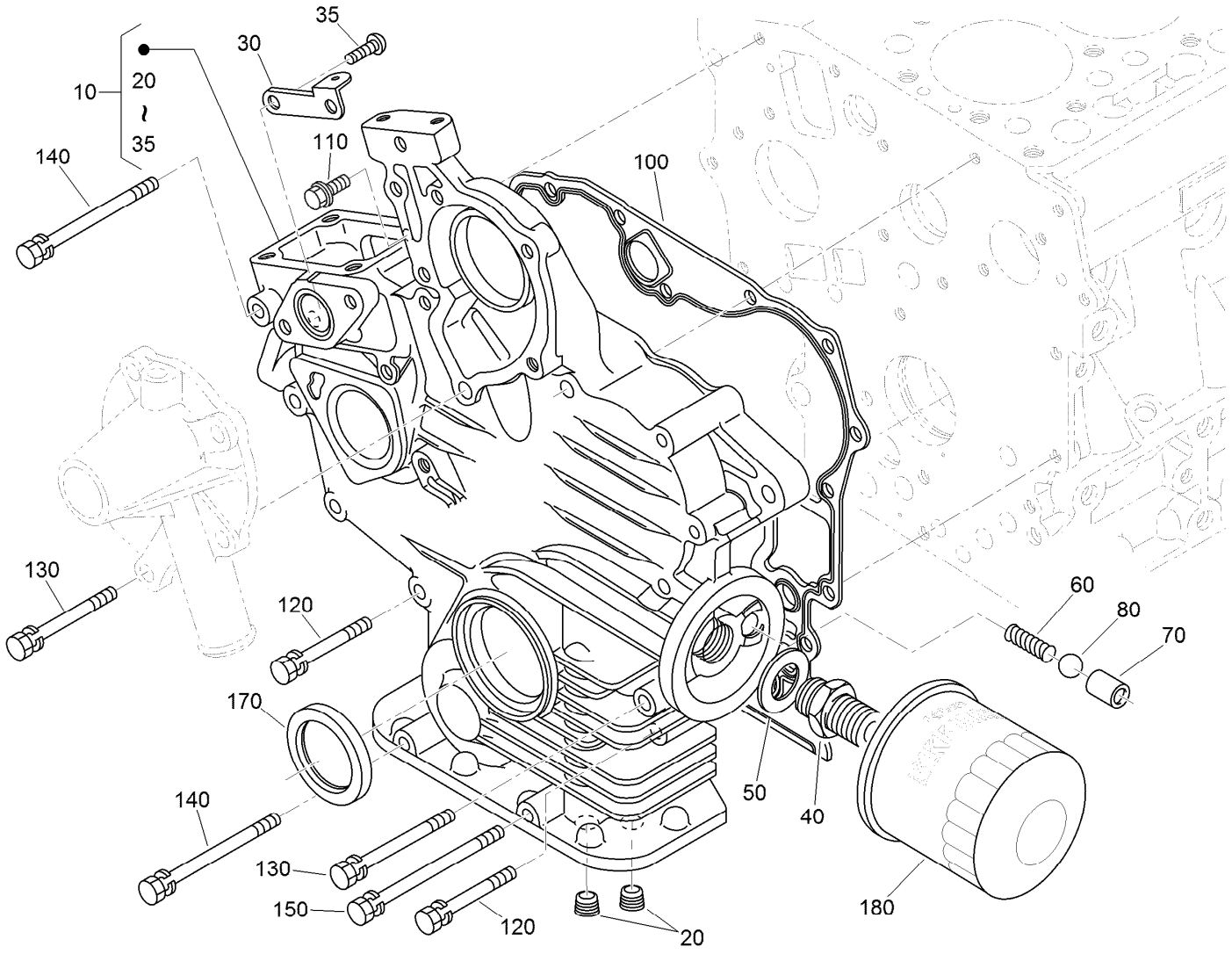

Gear Case and Oil Filter Cartridge Assembly

Ref.	Part Number	Qty.	Description
10	120-3138	1	Gear Case ASM
20	98-7488	2	Plug
30	110-3708	1	Stay-Spring, Start
35	100-2040	2	Screw
40	98-9388	1	Joint-Pipe
50	100-1926	1	Washer-Plain
60	100-2004	1	Spring
70	100-1894	1	Seat-Valve
80	100-1792	1	Ball

Ref.	Part Number	Qty.	Description
100	117-0327	1	Gasket-Case, Gear
110	127-0403	1	Bolt-Flange
120	125-9063	9	Bolt-Sems
130	100-1922	2	Bolt
140	98-9357	2	Bolt
150	110-3710	1	Bolt
170	120-7852	1	Seal-Oil
180	115-8189	1	Filter-Oil, Engine

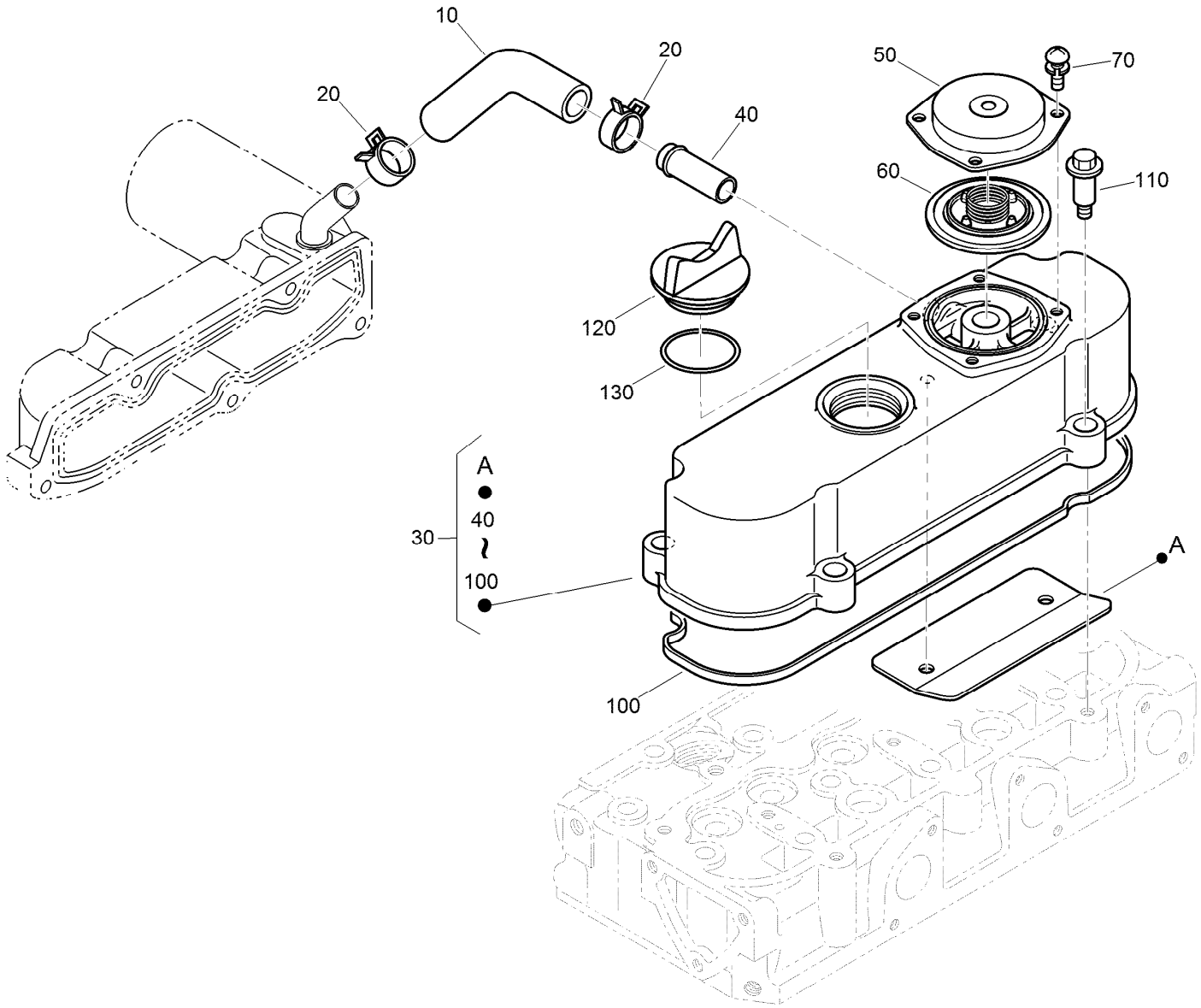

Cylinder Head Cover Assembly

Ref.	*Part Number*	*Qty.*	*Description*
10	120-3139	1	Tube-Breather
20	110-3712	2	Clamp-Hose
30	112-8332	1	Cylinder Head Cover ASM
40	98-9580	1	Pipe-Return, Water
50	110-3714	1	Cover-Breather
60	110-3715	1	Valve-Breather
70	98-9364	4	Screw (With Washer)
100	112-2521	1	Gasket-Cover, Head
110	108-7063	4	Bolt
120	107-9075	1	Plug-Filler, Oil
130	99-3446	1	O-Ring

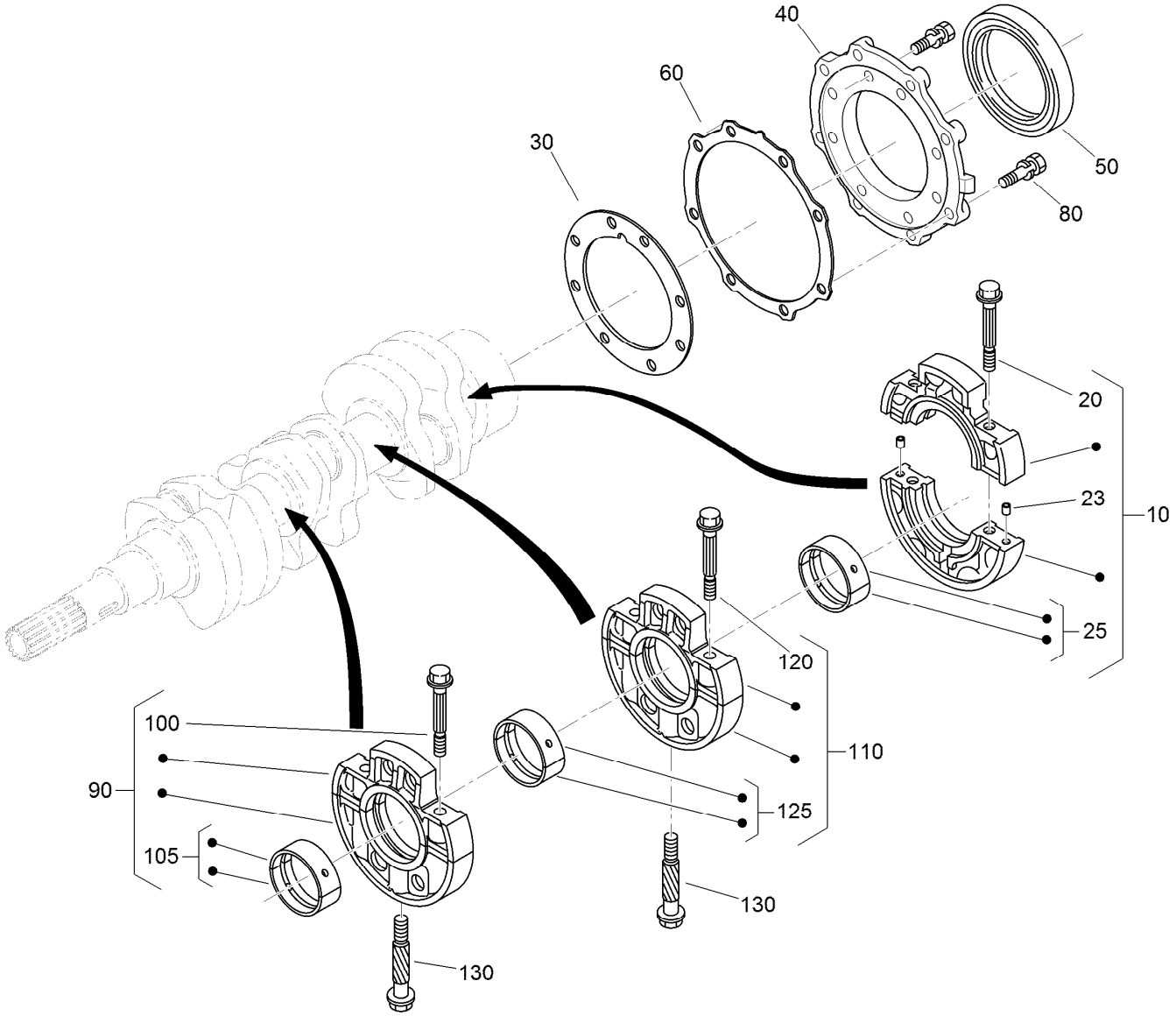

Main Bearing Case Assembly

Ref.	Part Number	Qty.	Description
10	125-9064	1	Wheel Bearing Case ASM
20	125-9065	2	Bolt-Flange
23	125-9082	2	Pin-Straight
25	125-9066	1	Crankshaft Metal ASM (STD)
25	125-9067	1	Crankshaft Metal ASM (-0.20Mm)
25	125-9068	1	Crankshaft Metal ASM (-0.40Mm)
30	100-1873	1	Gasket-Case, Bearing
40	112-8334	1	Cover-Case, Bearing
50	110-3724	1	Seal-Oil
60	100-1876	1	Gasket-Cover, Case
80	100-1750	16	Bolt
90	110-3725	1	Main Bearing Case ASM
100	110-3723	2	Bolt-Case, Bearing

Ref.	Part Number	Qty.	Description
105	110-3741	1	Crankshaft Metal ASM (STD)
105	125-9083	1	Crankshaft Metal ASM (-0.20Mm)
105	110-3743	1	Crankshaft Metal ASM (-0.40Mm)
110	125-9069	1	Main Case Bearing ASM
120	110-3723	2	Bolt-Case, Bearing
125	110-3741	1	Crankshaft Metal ASM (STD)
125	125-9083	1	Crankshaft Metal ASM (-0.20Mm)
125	110-3743	1	Crankshaft Metal ASM (-0.40Mm)
130	100-1874	2	Bolt-Case, Bearing

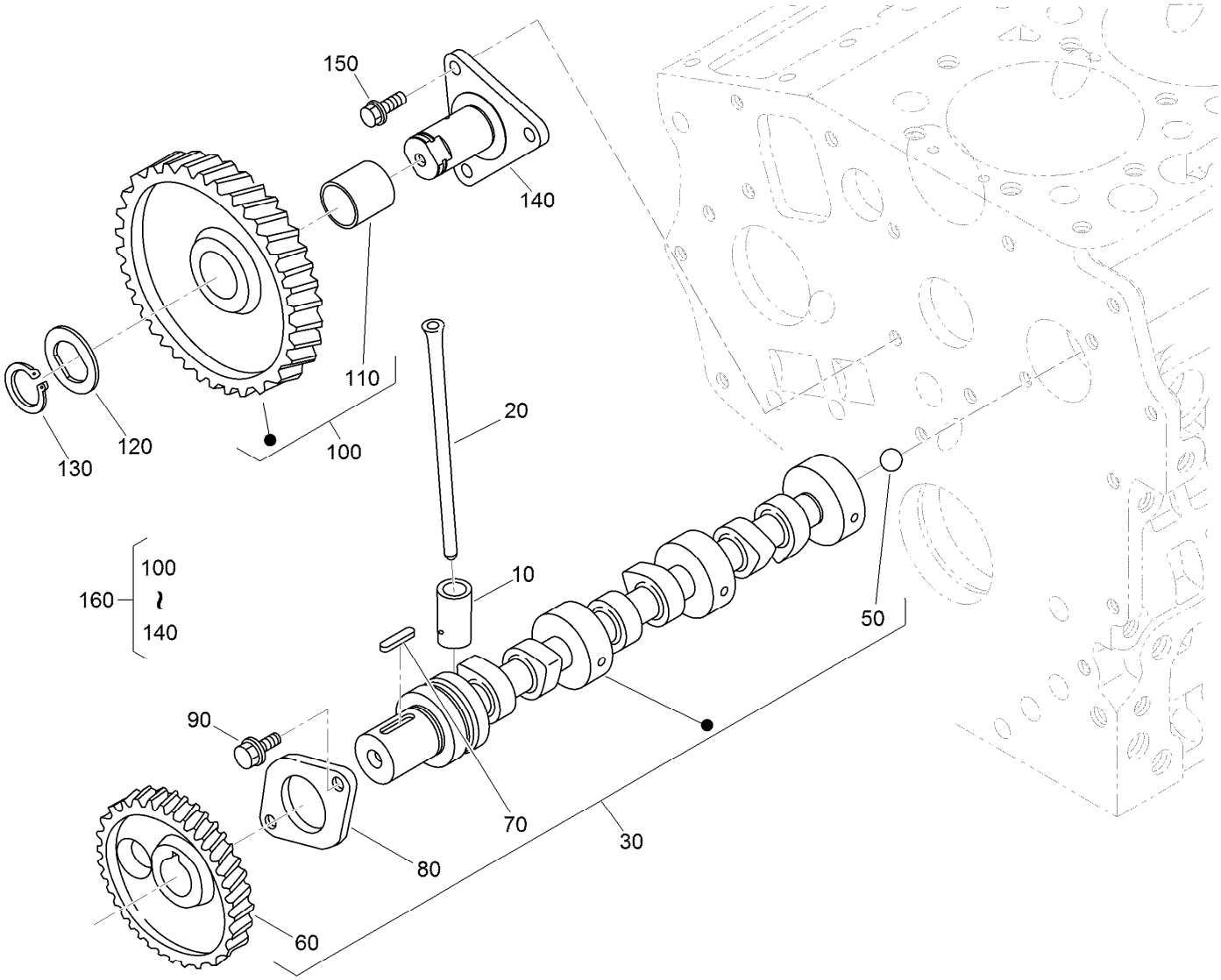

Camshaft and Idle Gear Shaft Assembly

Ref.	*Part Number*	*Qty.*	*Description*
10	110-3727	6	Tappet
20	100-1989	6	Rod-Push
30	120-3126	1	Camshaft ASM
50	110-3729	1	Ball
60	130-1534	1	Gear-Cam
70	98-9378	1	Key-Feather
80	100-1887	1	Stopper-Camshaft
90	98-9350	2	Bolt
100	121-2421	1	Idle Gear ASM
110	121-2422	1	Bushing
120	100-1970	1	Collar-Gear, Idle
130	100-1969	1	Ring-Snap
140	100-1967	1	Shaft-Gear, Idle
150	100-1774	3	Bolt-Flange
160	100-2240	1	Idle Gear ASM

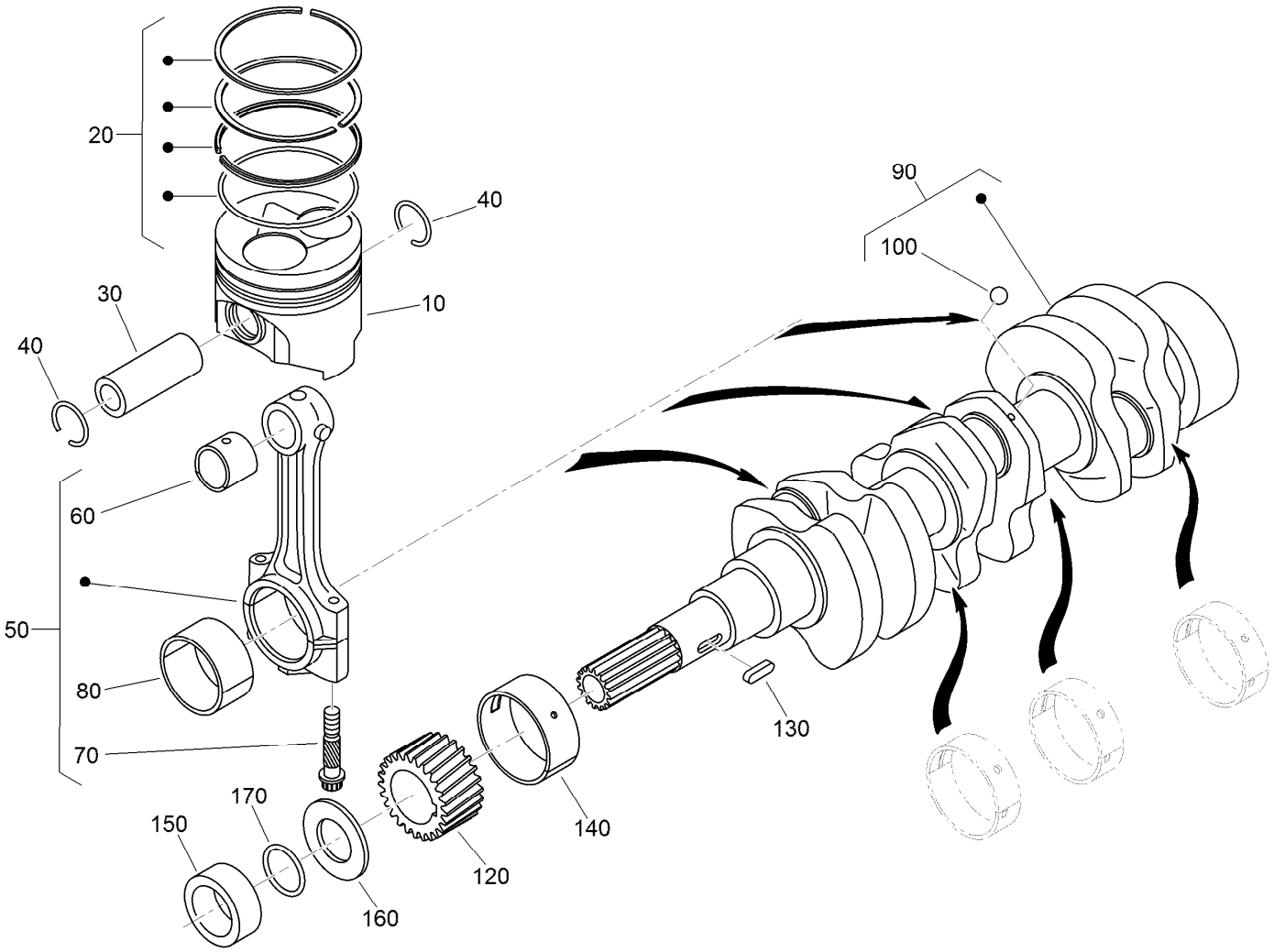

Piston and Crankshaft Assembly

Ref.	Part Number	Qty.	Description
10	130-1518	3	Piston
10	130-1520	3	Piston
20	130-1516	3	Piston Ring ASM
20	130-1517	3	Piston Ring ASM
30	110-3734	3	Pin-Piston
40	100-1835	6	Circlip-Internal
50	125-9070	3	Connecting Rod ASM
60	110-3736	3	Bushing-Pin, Piston
70	100-1999	6	Bolt-Rod, Connecting
80	100-2000	3	Metal-Crankpin (STD)
80	121-3849	3	Metal-Crankpin (-.20MM)

Ref.	Part Number	Qty.	Description
80	121-2420	3	Metal-Crankpin (-.40MM)
90	117-0308	1	Crankshaft
100	100-1791	3	Ball
120	100-1891	1	Gear-Crankshaft
130	100-1752	1	Key-Feather
140	110-3738	1	Metal-Crankshaft (STD)
140	121-2424	1	Metal-Crankshaft (-.20MM)
140	121-2425	1	Metal-Crankshaft (-.40MM)
150	100-1890	1	Collar-Crankshaft
160	100-1974	1	Slinger-Oil
170	100-2209	1	O-Ring

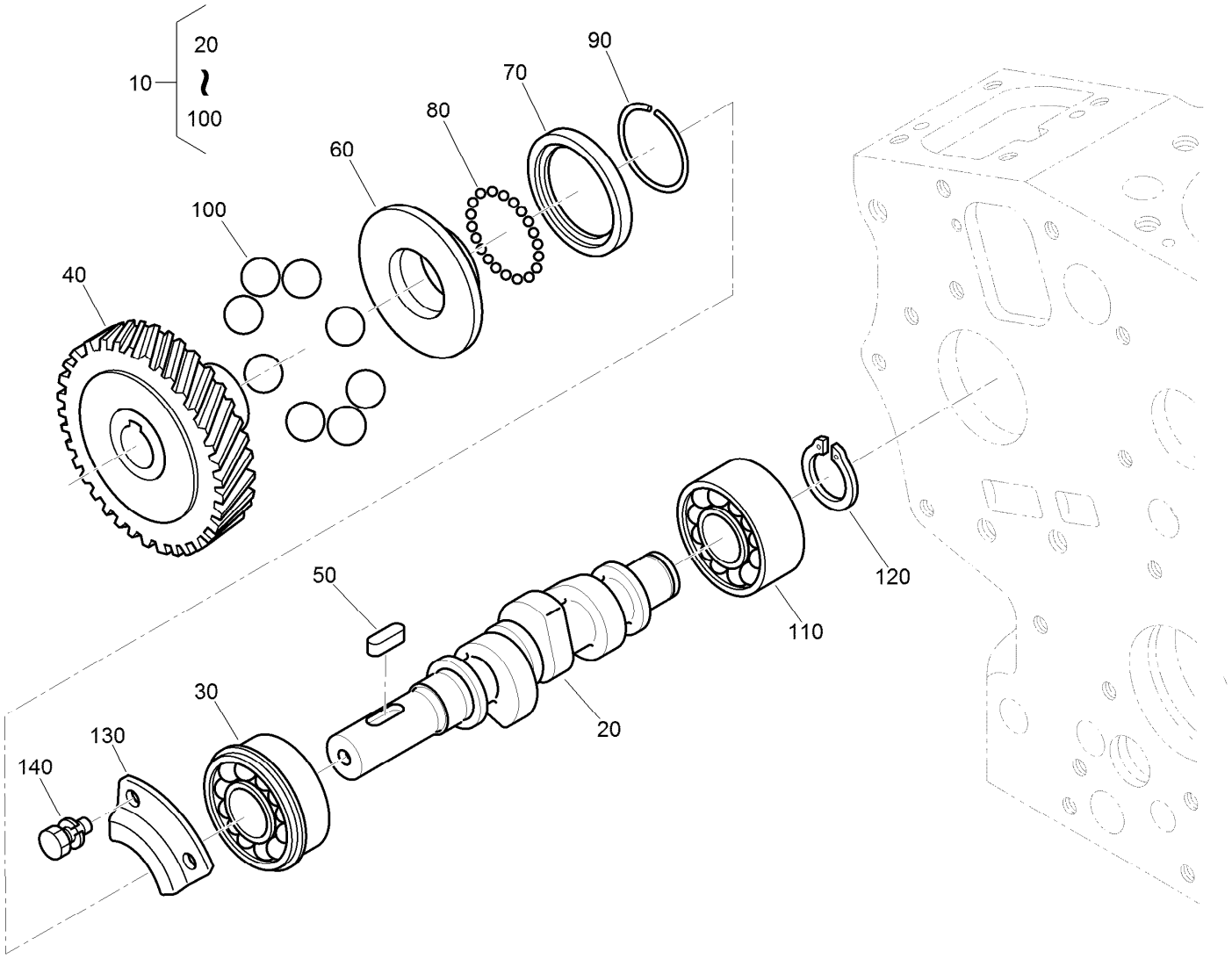

Fuel Camshaft Assembly

Ref.	*Part Number*	*Qty.*	*Description*
10	112-8335	1	Fuel Camshaft ASM
20	110-3756	1	Camshaft-Fuel
30	100-1795	1	Bearing-Ball
40	100-2006	1	Gear-Pump, Injection
50	100-1752	1	Key-Feather
60	112-8336	1	Sleeve-Governor
70	100-1904	1	Case-Ball, Governor
80	100-1790	32	Ball
90	100-1843	1	Circ-Clip
100	100-1793	8	Ball
110	110-3757	1	Bearing-Ball
120	100-1784	1	Circ-Clip, External
130	100-1888	1	Stopper-Fuel, Camshaft
140	98-9350	2	Bolt

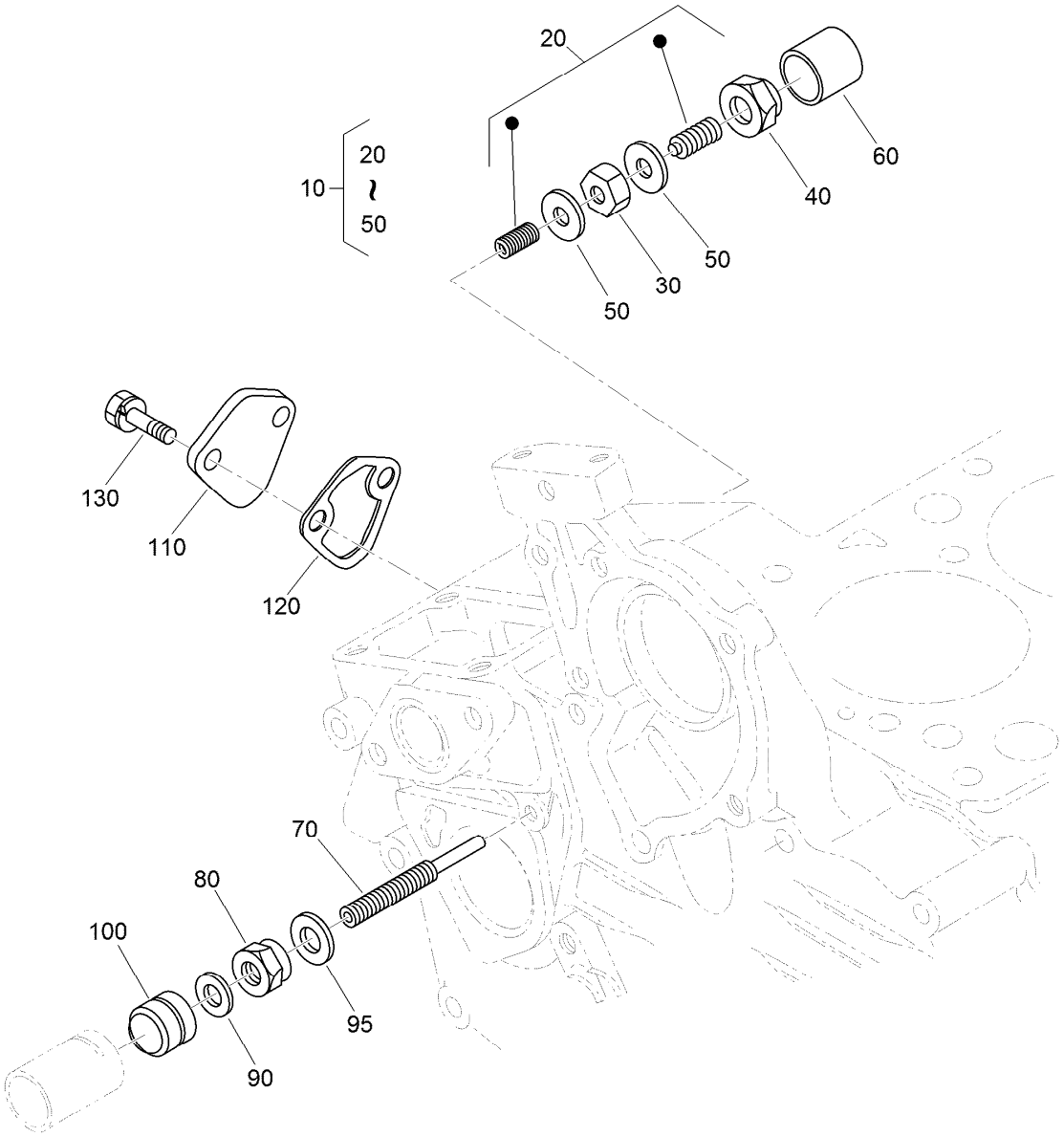

Idle Apparatus and Fuel Pump Cover Assembly

Ref.	*Part Number*	*Qty.*	*Description*
10	100-1898	1	Idle Apparatus ASM
20	100-1899	1	Adjusting Bolt ASM
30	100-1846	1	Nut
40	100-1901	1	Nut-Cap
50	98-7428	2	Gasket
60	100-1902	1	Cap
70	110-3758	1	Bolt-Adjusting
80	100-2175	1	Nut-Lock
90	98-7654	1	Gasket
95	107-9081	1	Gasket
100	99-8387	1	Nut-Cap
110	99-3514	1	Cover
120	98-9636	1	Gasket-Pump, Fuel
130	98-7692	2	Bolt

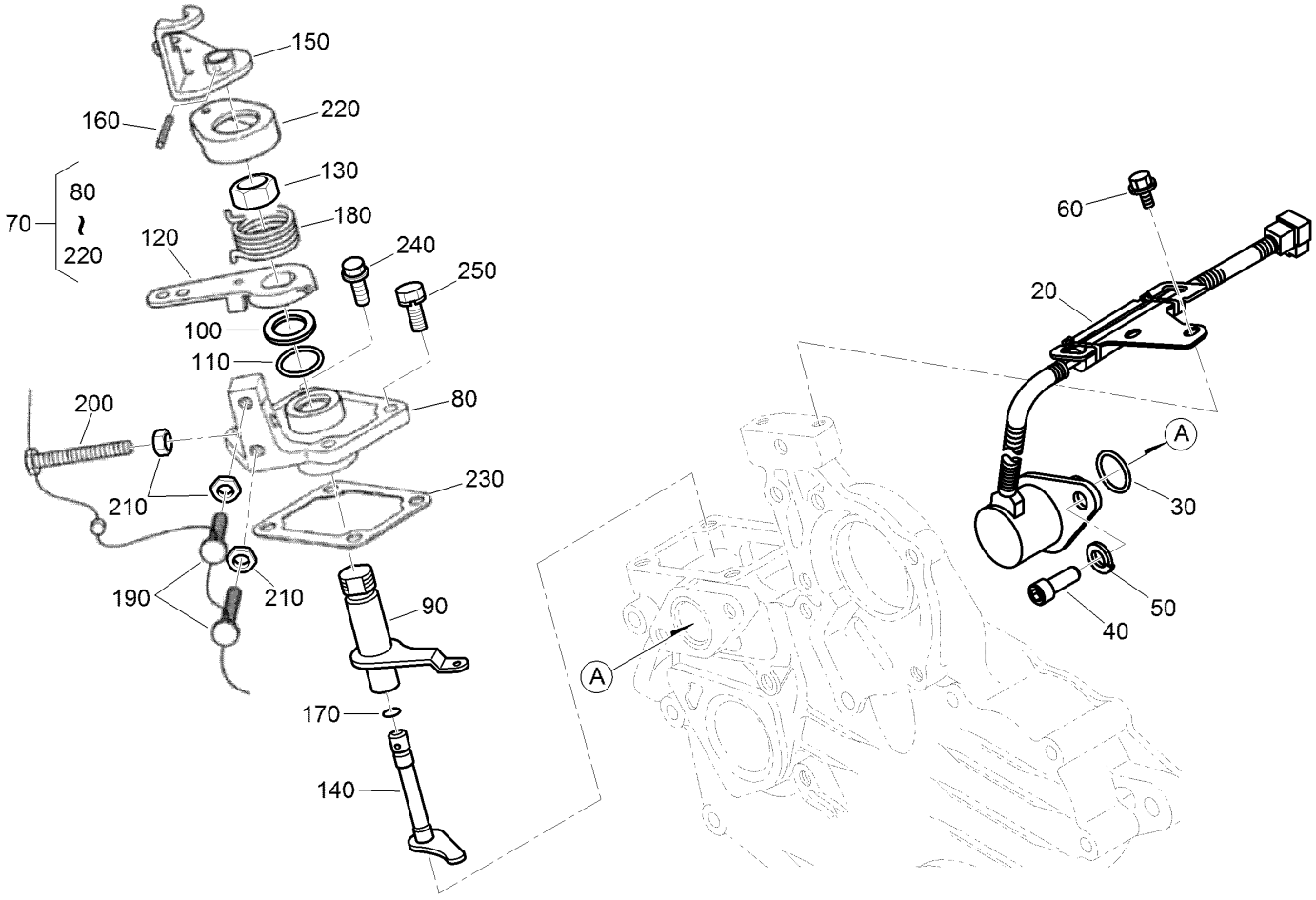

Stop Solenoid and Speed Control Plate Assembly

Ref.	Part Number	Qty.	Description
20	117-2719	1	Solenoid Stop ASM
30	110-3762	1	O-Ring
40	110-3763	2	Bolt-HSH
50	98-7699	2	Washer-Spring
60	100-1774	2	Bolt-Flange
70	110-3769	1	Speed Control Plate ASM
80	110-3770	1	Plate-Control, Speed
90	110-3771	1	Lever-Governor
100	110-3772	1	Collar
110	100-2208	1	O-Ring
120	110-3773	1	Lever-Control, Speed
130	110-3774	1	Nut-Control, Speed

Ref.	Part Number	Qty.	Description
140	110-3775	1	Shaft-Lever
150	110-3776	1	Lever-Stop, Engine
160	110-3777	1	Pin-Spring
170	100-2207	1	O-Ring
180	110-3778	1	Spring-Return
190	120-3133	2	Screw-Stopper
200	120-3134	1	Bolt
210	98-7572	3	Nut
220	110-3779	1	Cap
230	100-1962	1	Gasket-Plate, Control
240	127-0403	2	Bolt-Flange
250	112-2507	2	Bolt

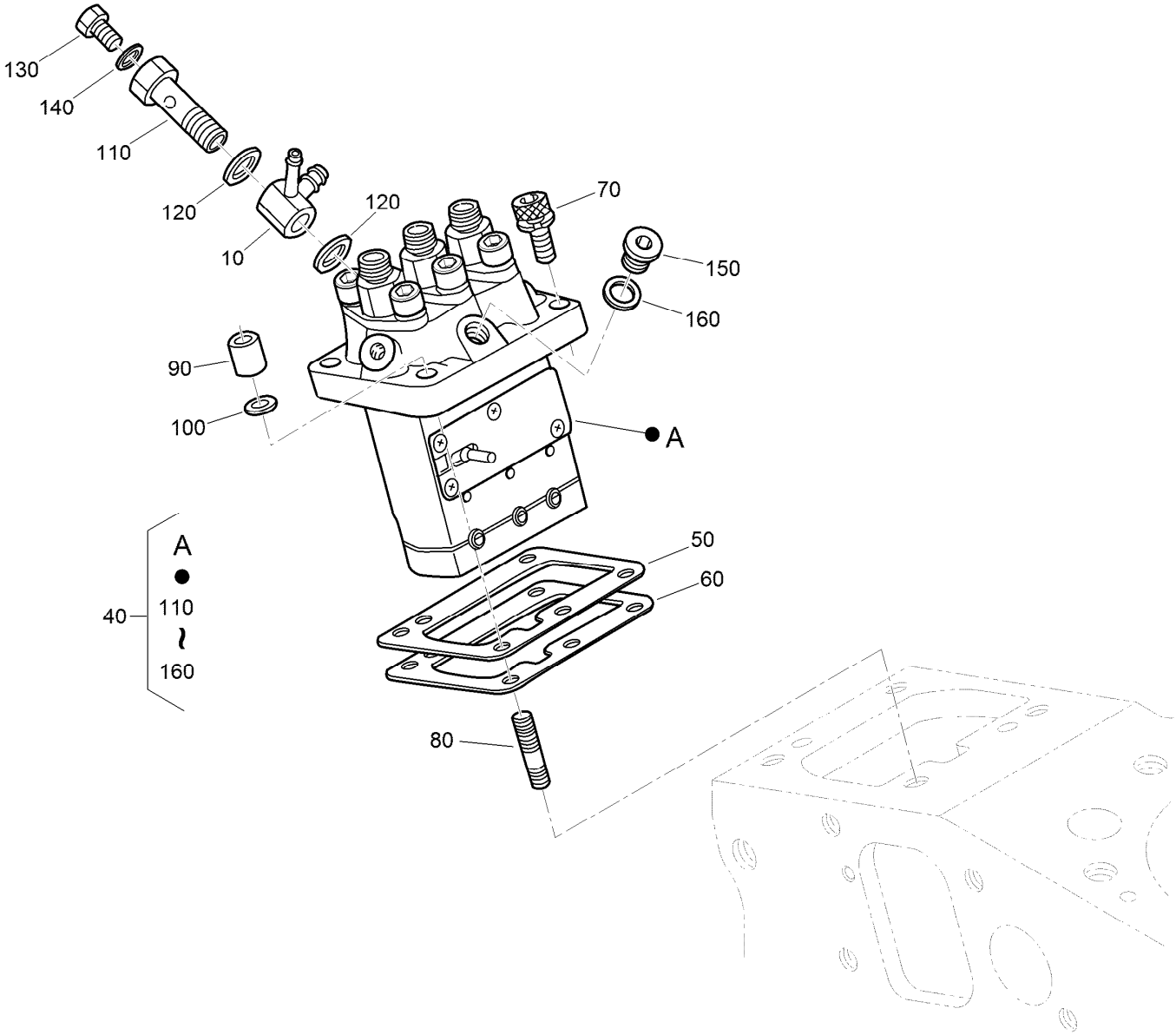

Injection Pump Assembly

Ref.	Part Number	Qty.	Description
10	110-3764	1	Joint
40	110-3765	1	Injection Pump ASM
50	115-3045	1	Shim-Injection (0.175MM)
50	98-9456	1	Shim-Injection (0.20MM)
50	98-9457	1	Shim-Injection (0.25MM)
60	98-9458	1	Shim-Injection (0.30MM)
60	115-3046	1	Shim-Injection (0.35MM)
70	117-7564	2	Bolt-Hex Soc HD
80	98-9438	2	Stud

Ref.	Part Number	Qty.	Description
90	98-9440	2	Nut-Cap
100	98-7699	2	Washer-Spring
110	100-1896	1	Screw-Hollow
120	98-9445	2	Gasket
130	98-9430	1	Screw
140	98-9446	1	Gasket
150	98-9466	1	Plug
160	98-9451	1	Gasket

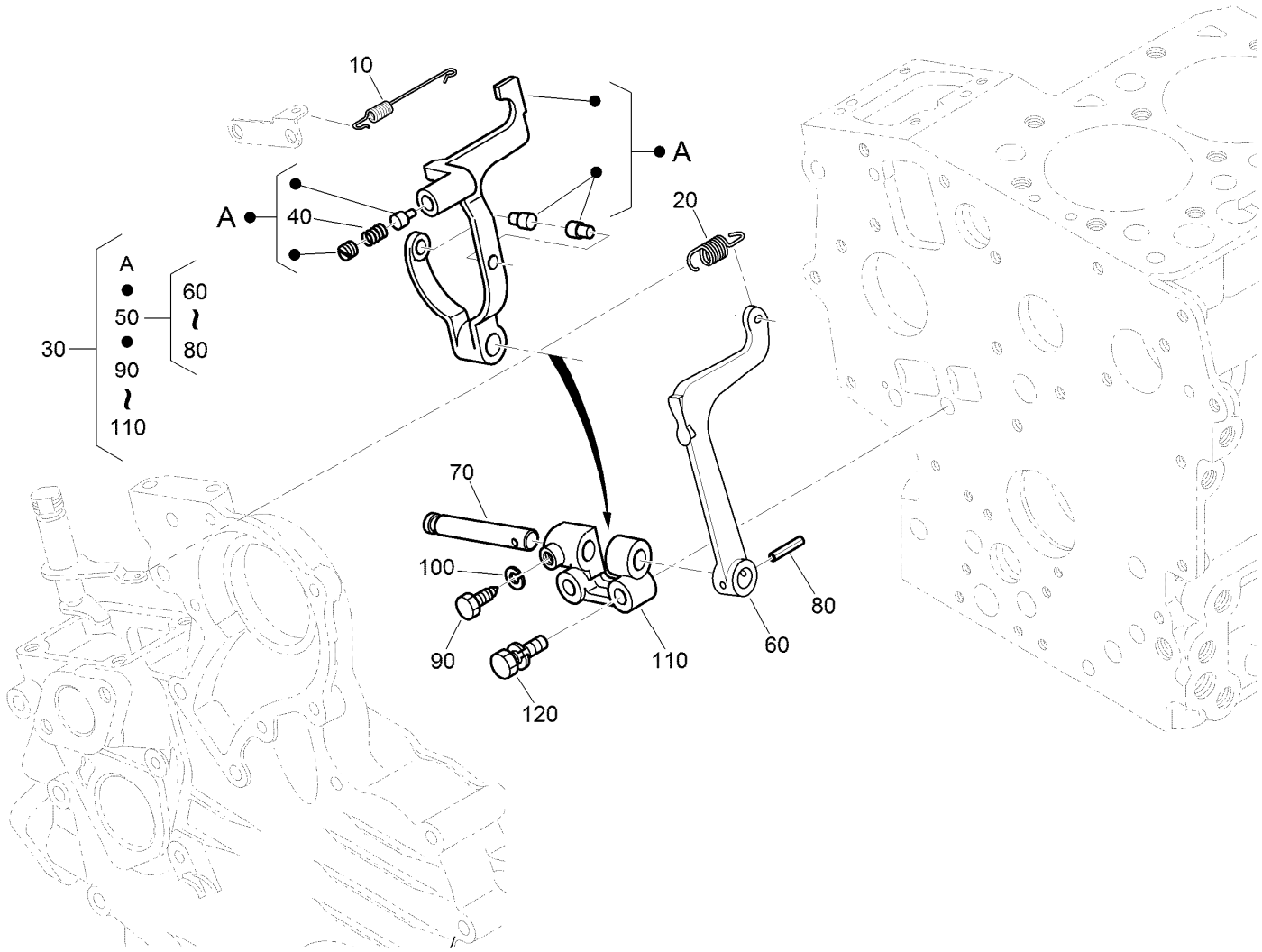

Governor Assembly

Ref.	*Part Number*	*Qty.*	*Description*
10	110-3766	1	Spring-Start
20	110-3767	1	Spring-Governor
30	120-3131	1	Fork Lever ASM
40	120-3132	1	Spring
50	100-1905	1	Fork Lever ASM
60	100-1907	1	Lever-Fork
70	100-1908	1	Shaft-Lever, Fork
80	100-1751	1	Pin-Spring
90	100-1845	1	Bolt
100	127-0408	1	Washer-Lock, Spring
110	100-1909	1	Holder-Lever, Fork
120	100-1763	2	Bolt

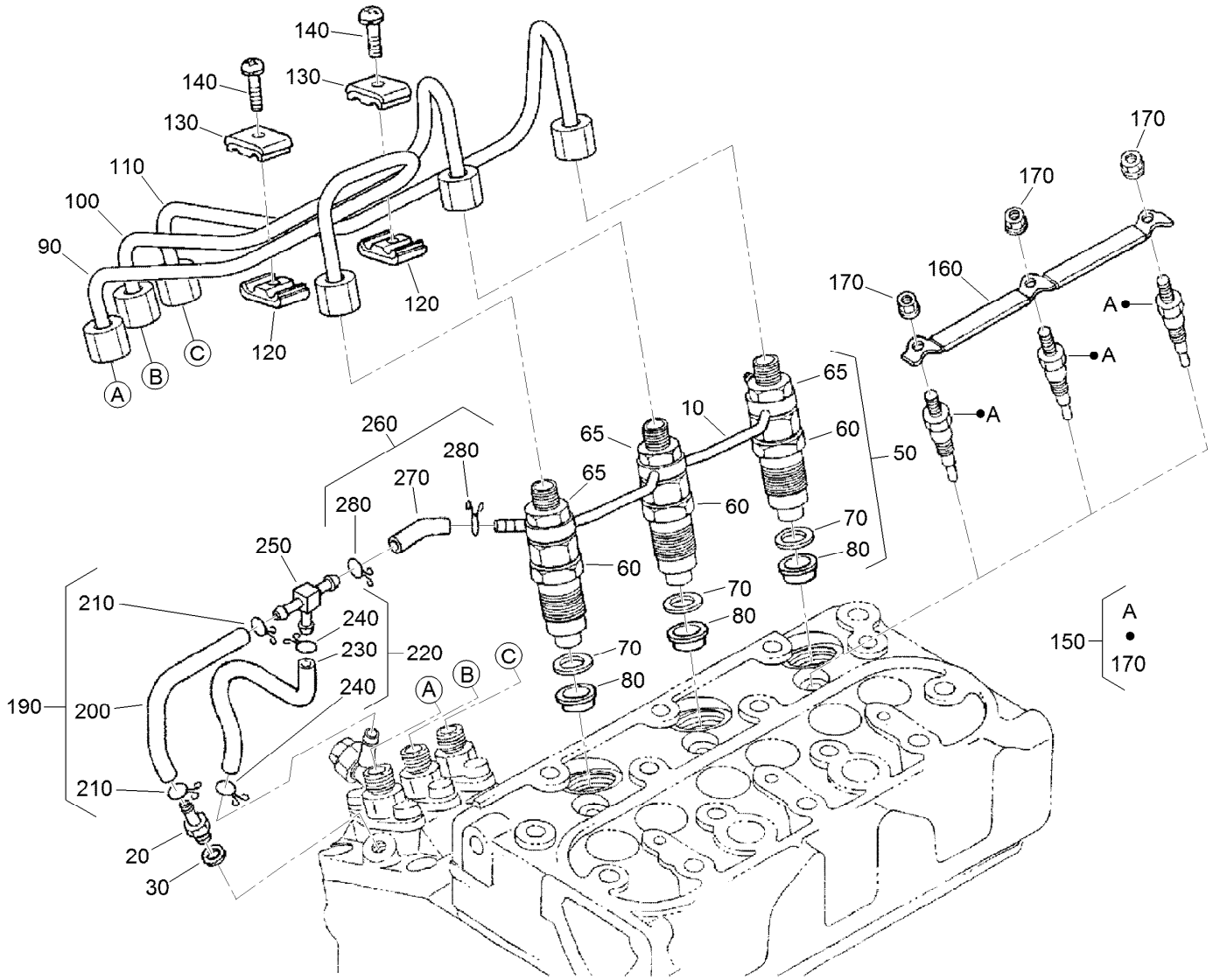

Nozzle Holder and Glow Plug Assembly

Ref.	Part Number	Qty.	Description
10	110-3780	1	Over Flow Pipe ASM
20	98-9431	1	Screw-Bleeder, Air
30	98-7654	1	Gasket
50	130-1305	3	Nozzle Holder Kit
60	130-1303	3	Nozzle Holder ASM
65	121-2411	3	Nut
70	98-7676	3	Gasket
80	98-7677	3	Seal-Heat
90	130-1522	1	Pipe-Injection
100	130-1523	1	Pipe-Injection
110	130-1541	1	Pipe-Injection
120	98-7682	2	Clamp-Pipe
130	98-7683	2	Clamp-Pipe
140	98-7684	2	Screw (W/Washer)

Ref.	Part Number	Qty.	Description
150	130-1411	3	Plug-Glow
160	110-3784	1	Cord-Plug, Glow
170	99-8377	3	Nut-Flange
190	110-3785	1	Fuel Tube ASM
200	110-3786	1	Tube-Fuel
210	98-7671	2	Clip-Pipe
220	110-3787	1	Fuel Tube ASM
230	110-3788	1	Tube-Fuel
240	98-7671	2	Clip-Pipe
250	112-8338	1	Pipe-Joint, T
260	110-3790	1	Fuel Tube ASM
270	110-3791	1	Tube-Fuel
280	98-7671	2	Clip-Pipe

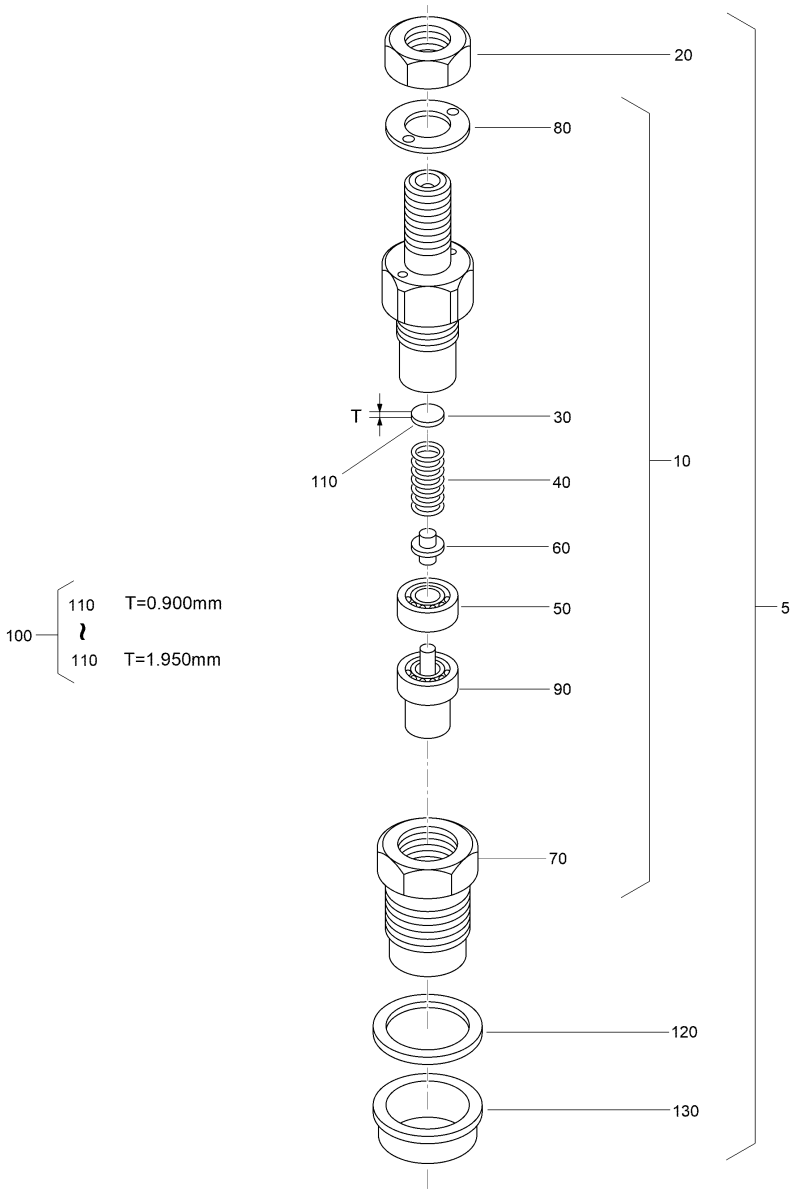

Nozzle Holder Assembly

Ref.	Part Number	Qty.	Description
5	130-1305	3	Nozzle Holder Kit
10	130-1303	3	Nozzle Holder ASM
20	121-2411	3	Nut
30	99-8302	3	Washer-Adjusting
40	99-8303	3	Spring-Nozzle
50	99-8304	3	Spacer-Distance
60	99-8305	3	Rod-Push
70	130-1304	3	Nut-Nozzle
80	99-8307	3	Washer-Plain
90	130-1497	3	Nozzle-Piece
100	98-9448	3	Adjusting Washer ASM
110	98-7642	3	Washer-Adjusting (0.900Mm)
110	98-7841	3	Washer-Adjusting (0.925Mm)
110	98-7842	3	Washer-Adjusting (0.950Mm)
110	98-7843	3	Washer-Adjusting (0.975Mm)
110	98-7844	3	Washer-Adjusting (1.000Mm)
110	98-7845	3	Washer-Adjusting (1.025Mm)
110	98-7846	3	Washer-Adjusting (1.050Mm)
110	98-7847	3	Washer-Adjusting (1.075MM)
110	98-7848	3	Washer-Adjusting (1.100MM)
110	98-7849	3	Washer-Adjusting (1.125MM)
110	98-7850	3	Washer-Adjusting (1.150MM)
110	98-7851	3	Washer-Adjusting (1.175MM)
110	98-7852	3	Washer-Adjusting (1.200MM)
110	98-7853	3	Washer-Adjusting (1.225MM)
110	98-7854	3	Washer-Adjusting (1.250MM)

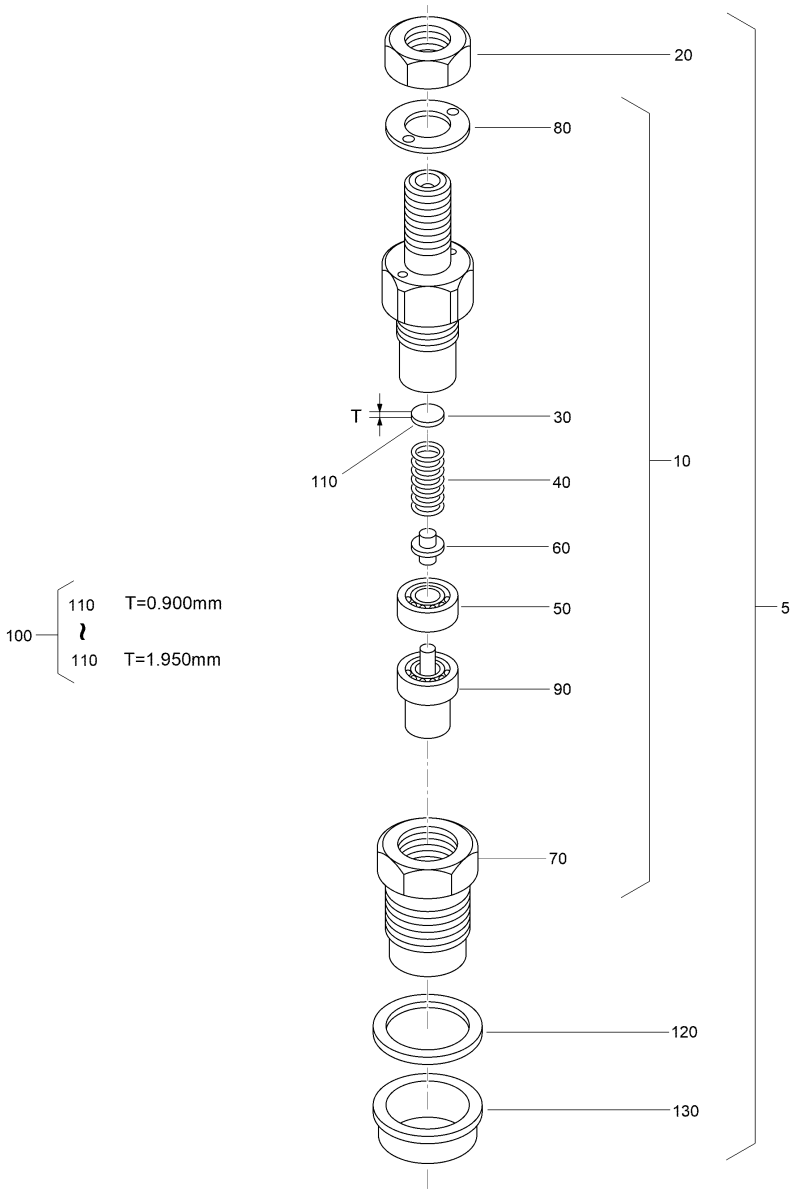

Nozzle Holder Assembly (continued)

Ref.	Part Number	Qty.	Description
110	98-7855	3	Washer-Adjusting (1.275MM)
110	98-7856	3	Washer-Adjusting 1.300MM)
110	98-7857	3	Washer-Adjusting (1.325MM)
110	98-7858	3	Washer-Adjusting (1.350MM)
110	98-7859	3	Washer-Adjusting (1.375MM)
110	98-7860	3	Washer-Adjusting (1.400MM)
110	98-7861	3	Washer-Adjusting (1.425MM)
110	98-7862	3	Washer-Adjusting (1.450MM)
110	98-7863	3	Washer-Adjusting (1.475MM)
110	98-7864	3	Washer-Adjusting (1.500MM)

Ref.	Part Number	Qty.	Description
110	98-7865	3	Washer-Adjusting (1.525MM)
110	98-7866	3	Washer-Adjusting (1.550MM)
110	98-7867	3	Washer-Adjusting (1.575MM)
110	98-7868	3	Washer-Adjusting (1.600MM)
110	98-7869	3	Washer-Adjusting (1.625MM)
110	98-7870	3	Washer-Adjusting (1.650MM)
110	98-7871	3	Washer-Adjusting (1.675MM)
110	98-7872	3	Washer-Adjusting (1.700MM)
110	98-7873	3	Washer-Adjusting (1.725MM)
110	98-7874	3	Washer-Adjusting (1.750MM)

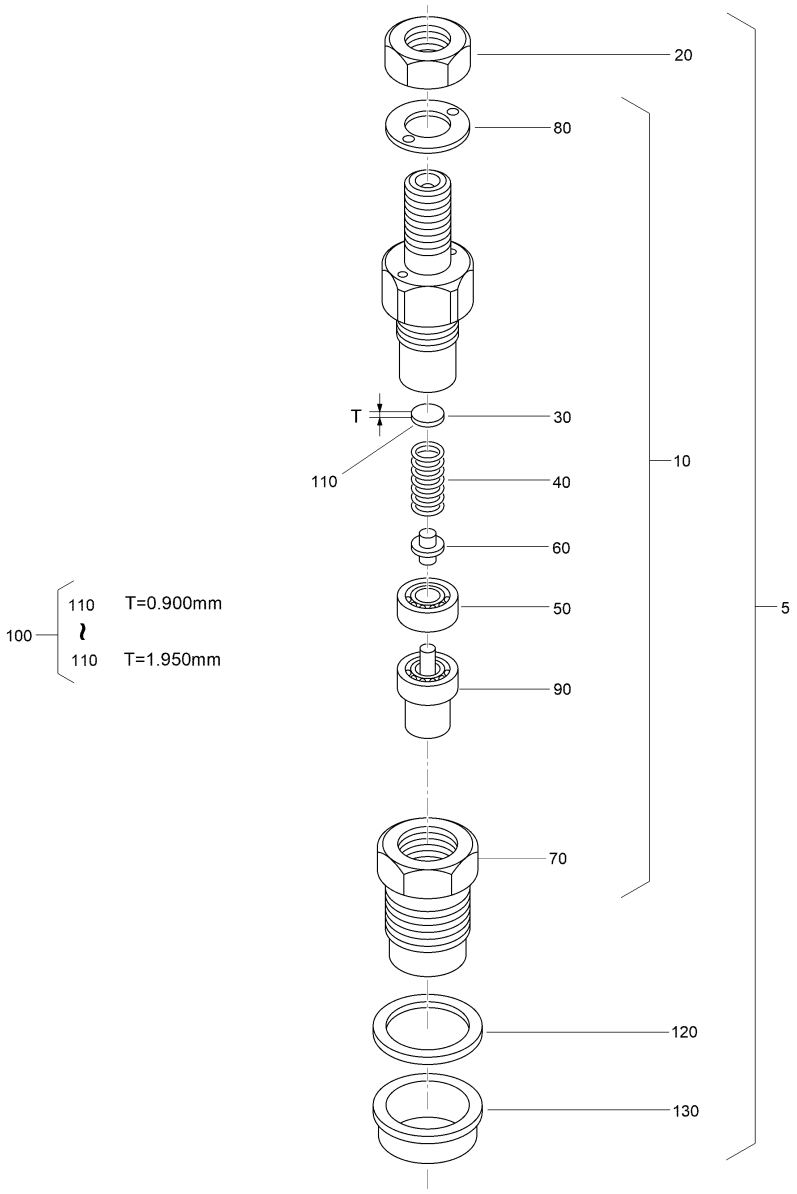

Nozzle Holder Assembly (continued)

Ref.	Part Number	Qty.	Description
110	98-7875	3	Washer-Adjusting (1.775MM)
110	98-7876	3	Washer-Adjusting (1.800MM)
110	98-7877	3	Washer-Adjusting (1.825MM)
110	98-7878	3	Washer-Adjusting (1.850MM)
110	98-7879	3	Washer-Adjusting (1.875MM)
110	98-7880	3	Washer-Adjusting (1.900MM)
110	98-7881	3	Washer-Adjusting (1.925MM)
110	98-7882	3	Washer-Adjusting (1.950MM)
120	98-7676	3	Gasket
130	98-7677	3	Seal-Heat

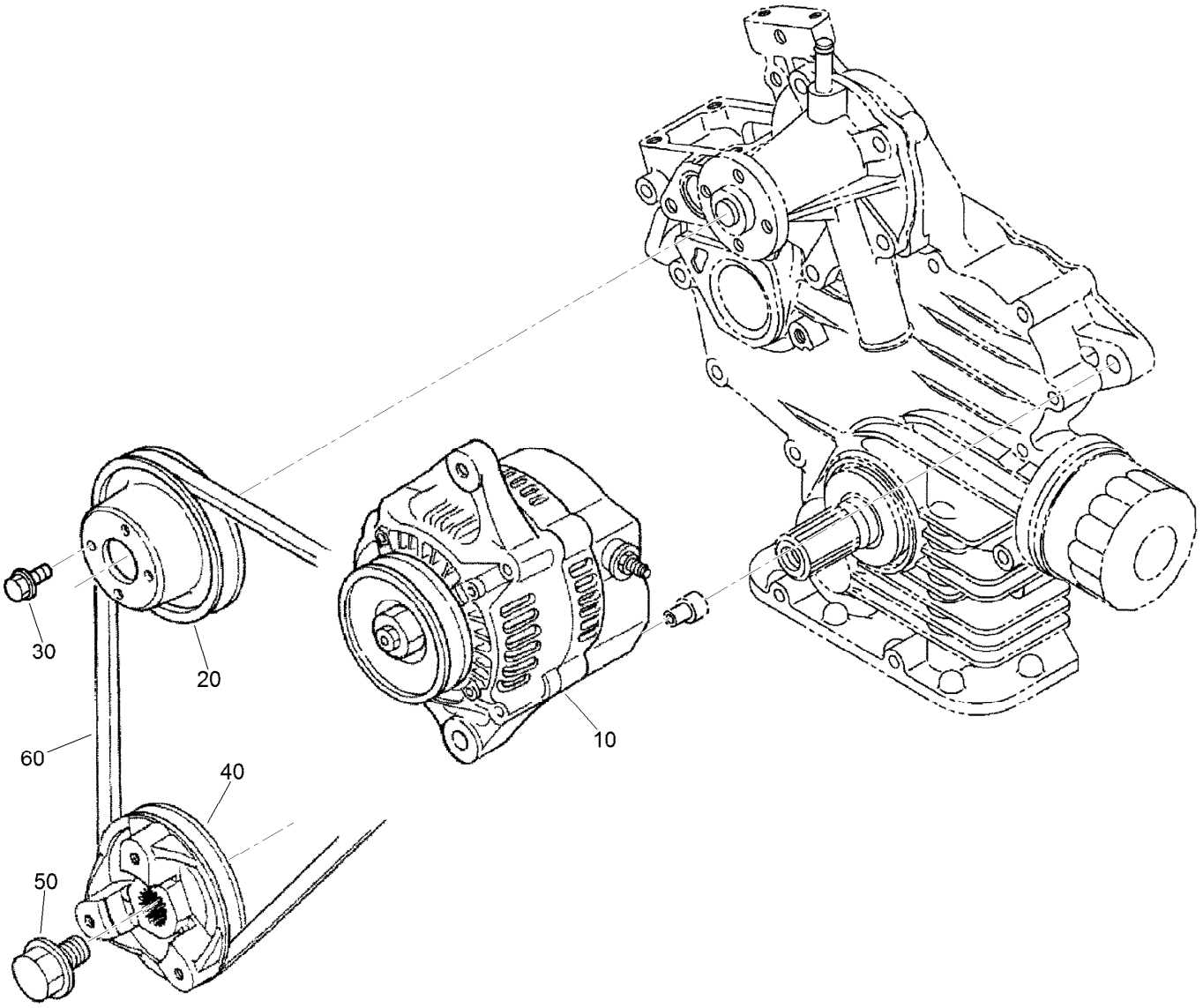

Alternator and Pulley Assembly

Ref.	*Part Number*	*Qty.*	*Description*
10	117-5541	1	60 Amp Alternator ASM
20	100-1921	1	Pulley-Fan
30	99-8363	4	Bolt-Flange
40	112-2510	1	Pulley-Drive, Fan
50	100-1978	1	Bolt
60	119-4486	1	Belt-V, Fan

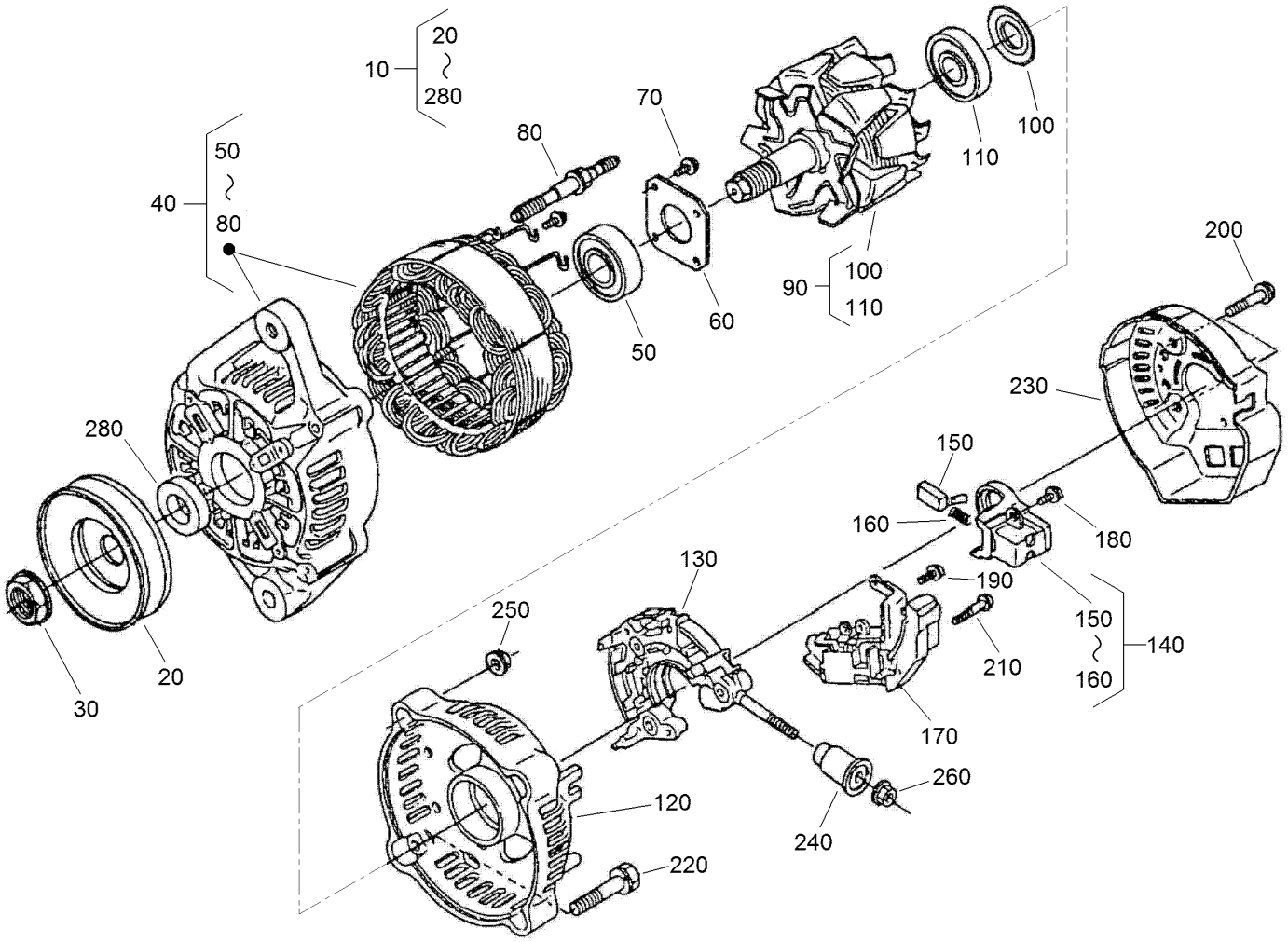

Alternator Components Assembly

Ref.	Part Number	Qty.	Description
10	117-5541	1	60 Amp Alternator ASM
20	98-9453	1	Pulley-Dynamo
30	98-7708	1	Nut
40	117-0316	1	Drive End Frame ASM
50	133-2811	1	Bearing
60	98-7715	1	Plate-Retainer
70	98-7716	4	Screw-Head, Round
80	98-7717	2	Bolt-Through
90	117-0317	1	Rotor ASM
100	98-7711	1	Cover-Bearing
110	107-0138	1	Bearing-Ball
120	133-2813	1	Frame-End
130	117-0322	1	Holder
140	107-0141	1	Brush Holder ASM

Ref.	Part Number	Qty.	Description
150	98-7724	2	Brush
160	98-7725	2	Spring-Brush
170	117-0319	1	Regulator ASM
180	98-7727	6	Screw-Head, Round
190	98-7728	1	Screw-Head, Round
200	98-7729	3	Bolt
210	98-7726	2	Screw-Head, Round
220	98-7731	2	Bolt
230	117-0320	1	Cover-End
240	117-0321	1	Insulation-Brush
250	98-7730	2	Nut
260	98-7732	1	Nut
280	98-7709	1	Collar

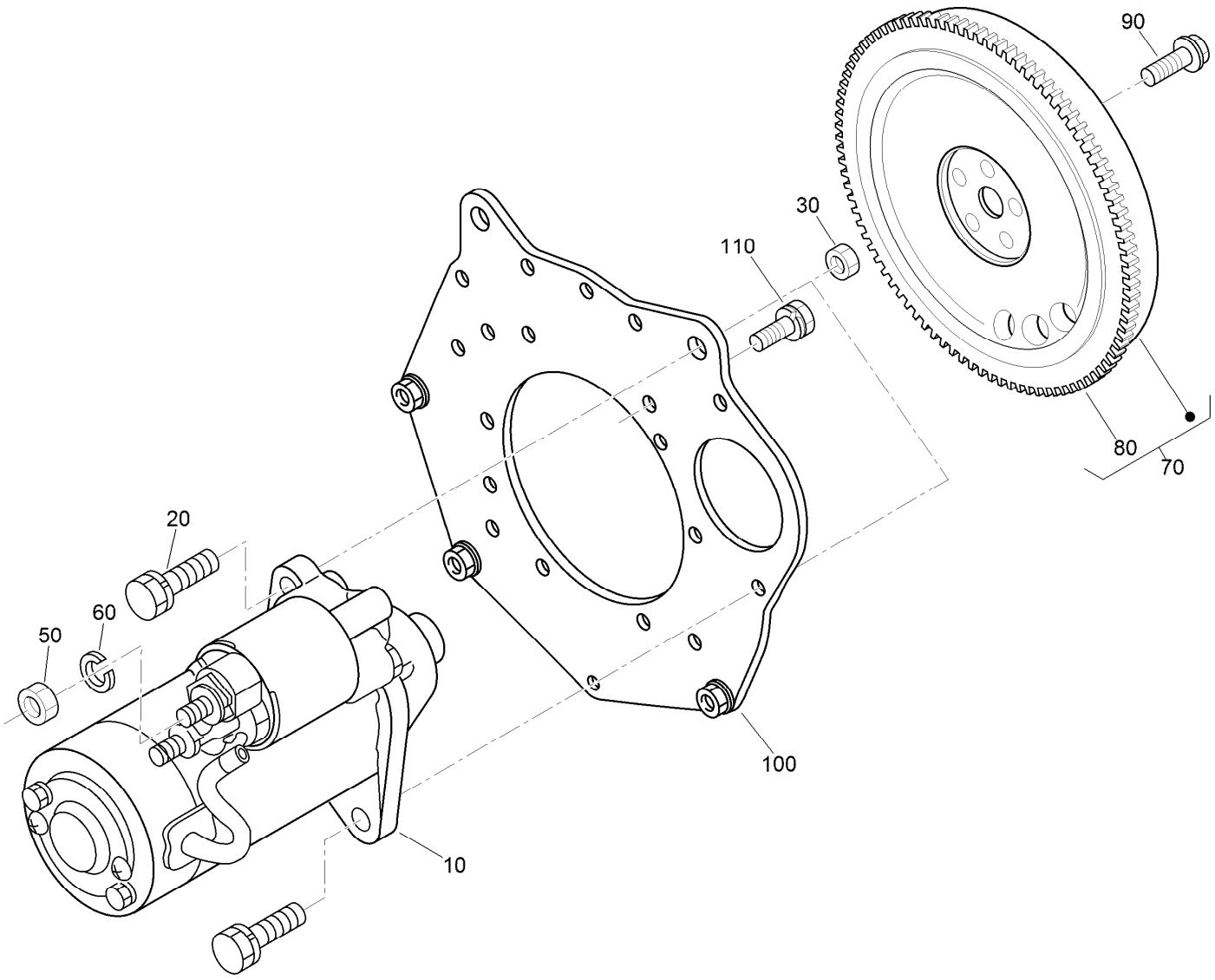

Starter and Flywheel Assembly

Ref.	*Part Number*	*Qty.*	*Description*
10	110-3800	1	Starter ASM
20	98-7697	2	Bolt
30	98-7534	2	Nut
50	98-7534	1	Nut
60	105-2893	1	Washer-Spring
70	130-1369	1	Flywheel ASM
80	127-1604	1	Gear-Ring
90	100-1930	5	Bolt-Flywheel
100	120-3130	1	Plate-End, Rear
110	110-3754	10	Bolt

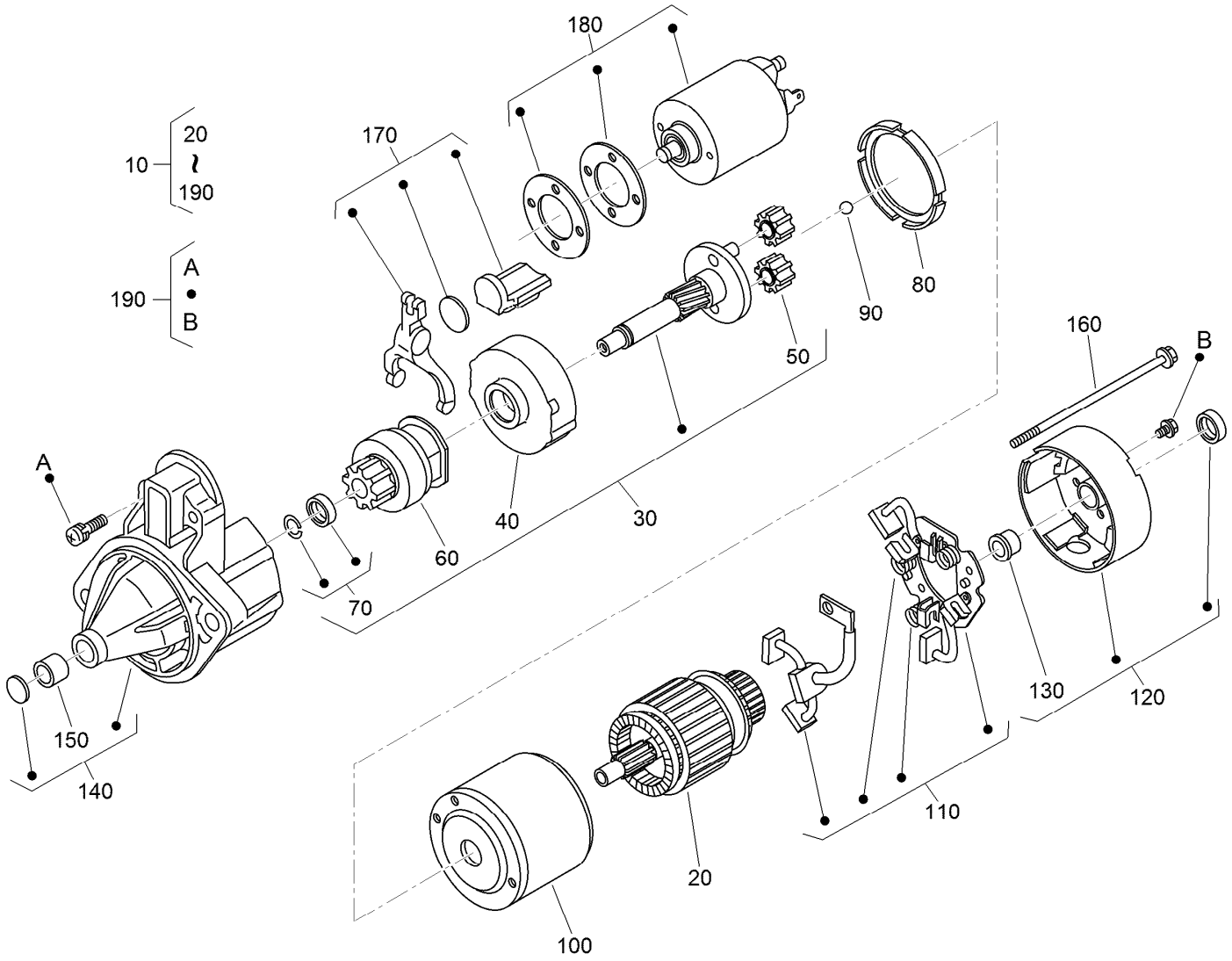

Starter Component Assembly

Ref.	Part Number	Qty.	Description
10	110-3800	1	Starter ASM
20	110-3801	1	Armature
30	110-3802	1	Shaft ASM
40	120-3142	1	Gear-Internal
50	110-3804	3	Gear-Planetary
60	110-3805	1	Clutch-Running, Over
70	110-3806	1	Stopper
80	120-3143	1	Gasket
90	110-3808	1	Ball
100	130-1295	1	Yoke

Ref.	Part Number	Qty.	Description
110	110-3810	1	Brush Holder ASM
120	110-3811	1	Rear Bracket ASM
130	110-3812	1	Bushing
140	110-3813	1	Front Bracket ASM
150	110-3814	1	Bushing
160	110-3815	2	Bolt
170	110-3816	1	Fork Lever ASM
180	110-3817	1	Magnetic Switch ASM
190	110-3818	1	Screws (Set Of 4)

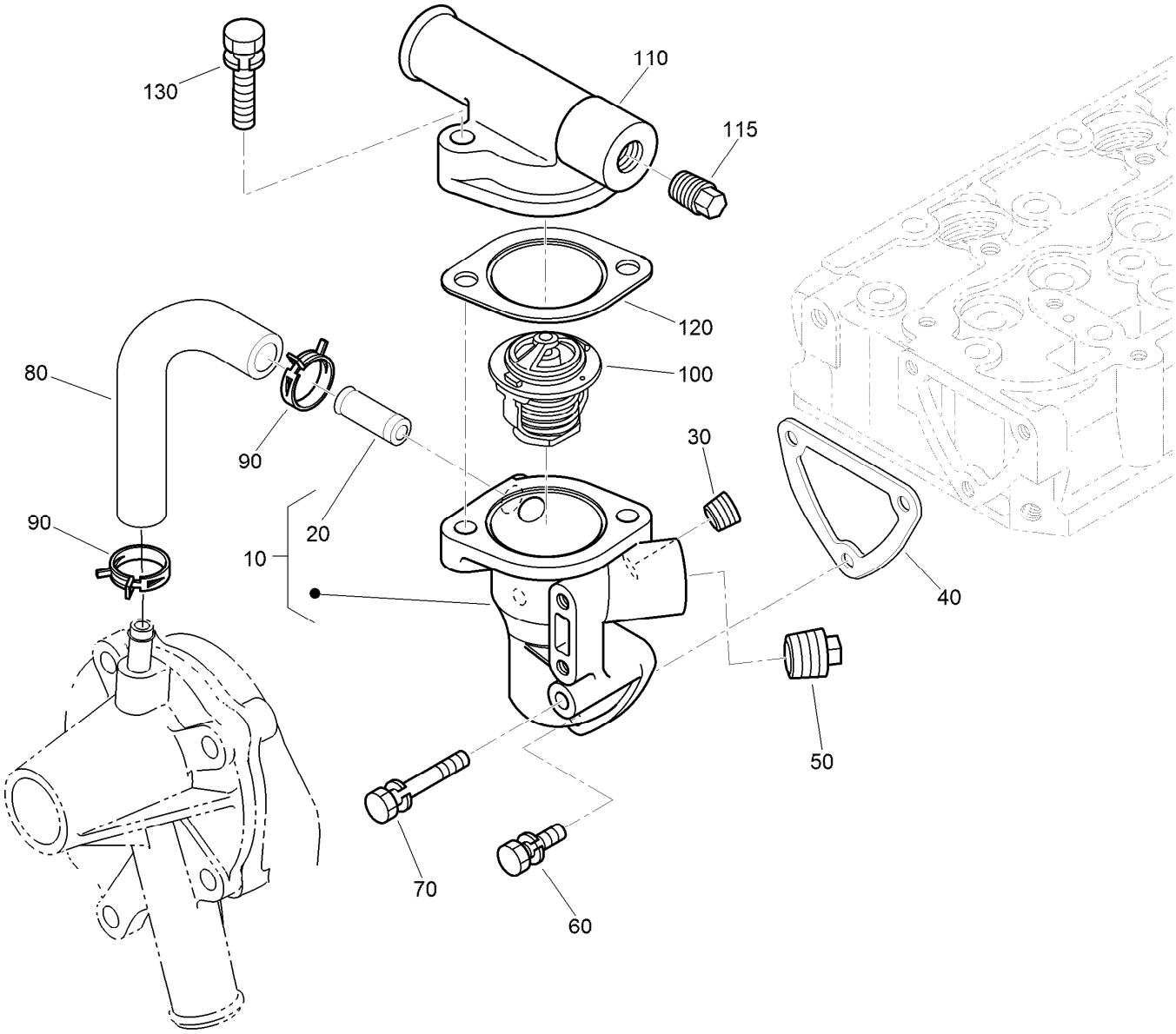

Water Flange and Thermostat Assembly

Ref.	*Part Number*	*Qty.*	*Description*
10	110-3819	1	Water Flange ASM
20	98-9580	1	Pipe-Return, Water
30	98-9444	1	Plug
40	110-3820	1	Gasket-Flange, Water
50	110-3821	1	Plug
60	98-7692	2	Bolt
70	125-9063	1	Bolt-Sems
80	110-3822	1	Pipe-Return, Water
90	125-9078	2	Clamp-Hose
100	98-7778	1	Thermostat ASM
110	120-7575	1	Cover-Thermostat
115	125-9079	1	Plug
120	105-3748	1	Gasket-Thermostat
130	98-7777	2	Bolt

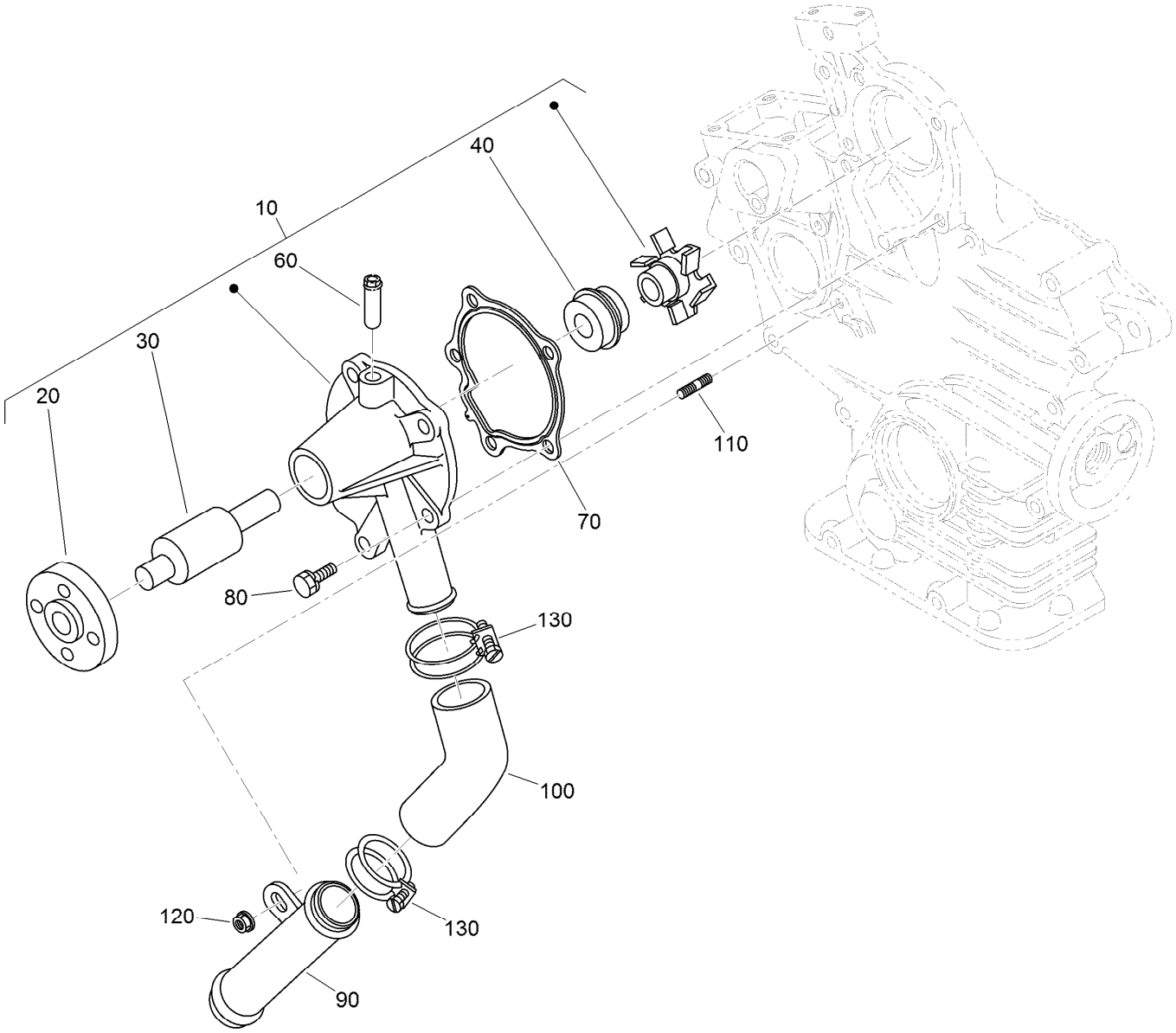

Water Pump and Water Pipe Assembly

Ref.	*Part Number*	*Qty.*	*Description*
10	110-3824	1	Water Pump ASM
20	125-9081	1	Flange-Pump, Water
30	100-1934	1	Bearing-Ball
40	99-3518	1	Water Pump Seal ASM
60	100-1932	1	Pipe-Return, Water
70	117-0330	1	Gasket-Pump, Water
80	100-1750	4	Bolt
90	100-1918	1	Pipe-Water
100	110-3827	1	Pipe-Water
110	100-1924	1	Stud
120	100-2203	1	Nut-Flange
130	110-3828	2	Band-Pipe

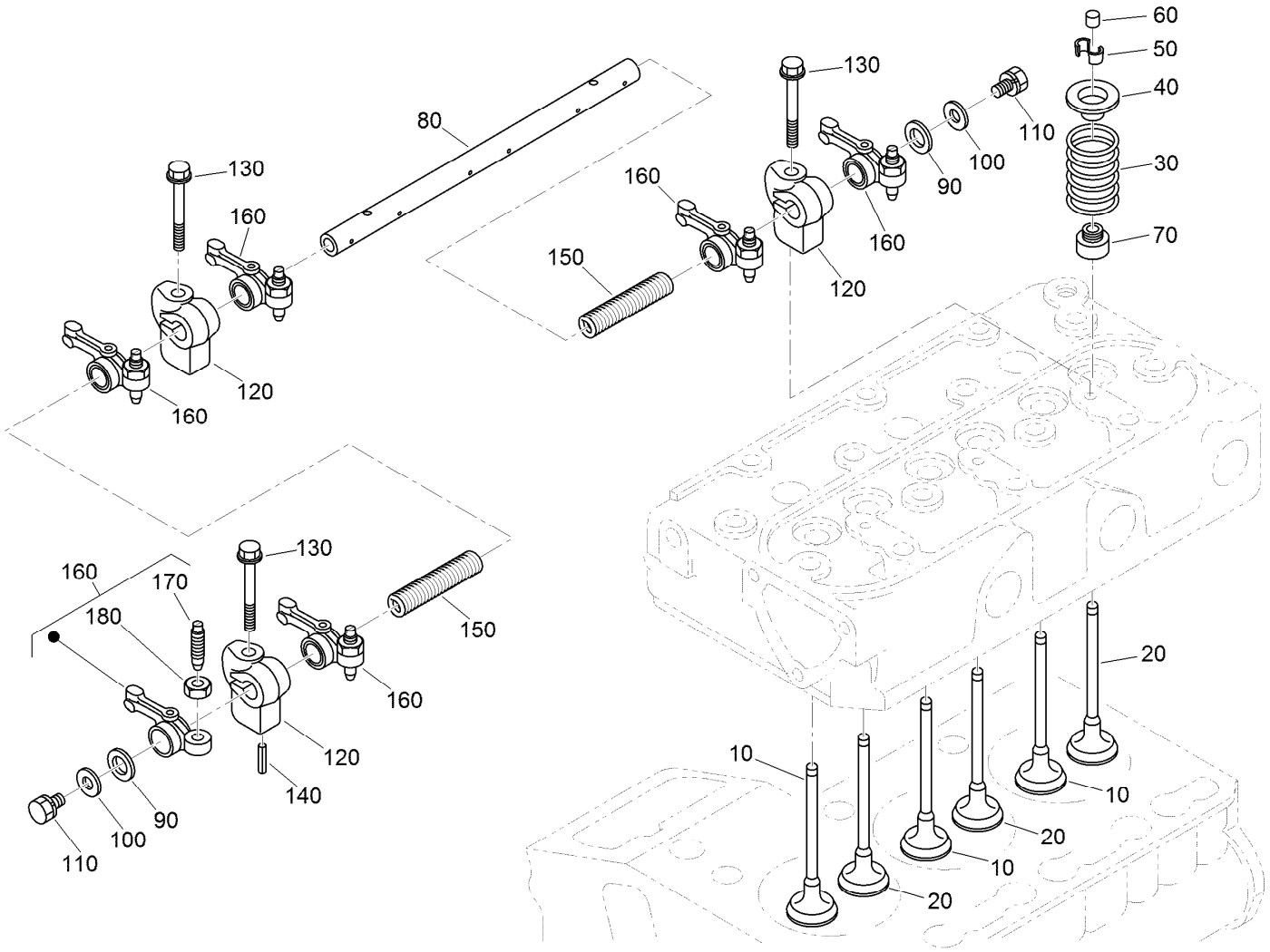

Valve and Rocker Arm Assembly

Ref.	Part Number	Qty.	Description
10	112-2514	3	Valve-Inlet
20	112-2515	3	Valve-Exhaust
30	100-1823	6	Spring-Valve
40	100-1825	6	Retainer-Spring, Valve
50	120-3136	6	Collet-Spring, Valve
60	100-2155	6	Cap-Valve
70	100-1797	6	Seal-Stem, Valve
80	112-8341	1	Shaft-Arm, Rocker
90	100-2044	2	Washer

Ref.	Part Number	Qty.	Description
100	110-3832	2	Washer-Plain
110	100-1762	2	Bolt
120	110-3833	3	Bracket-Arm, Rocker
130	110-3834	3	Bolt-Flange
140	98-7602	1	Pin-Spring
150	112-8342	2	Spring
160	100-1884	6	Rocker Arm ASM
170	100-1885	6	Screw-Adjusting
180	100-1827	6	Nut

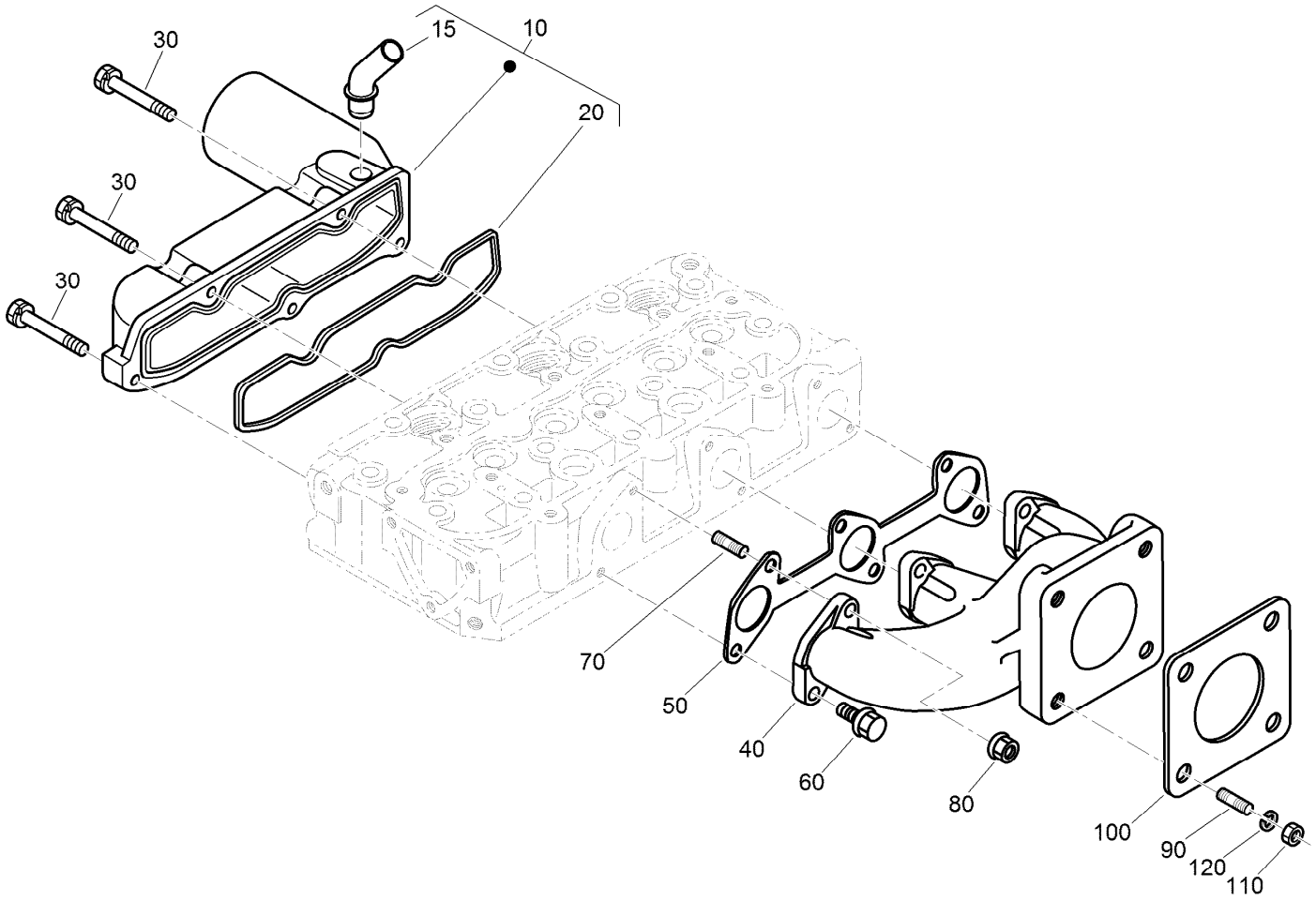

Inlet and Exhaust Manifold Assembly

Ref.	*Part Number*	*Qty.*	*Description*
10	120-3141	1	Intake Manifold ASM
15	121-2417	1	Pipe-Breather
20	110-3838	1	Gasket-Manifold, Intake
30	98-9352	5	Bolt
40	110-3839	1	Manifold-Exhaust
50	110-3840	1	Gasket-Manifold, Exhaust
60	130-1154	3	Screw-Hex HD
70	130-1156	3	Bolt-Stud
80	100-1778	3	Nut
90	98-7769	4	Stud
100	99-8343	1	Gasket-Muffler
110	98-7534	4	Nut
120	105-2893	4	Washer-Spring

Attachments and Accessories

For 04520 Greensmaster 3400 TriFlex Traction Unit

Product Name	Model/Part
Turf Evaluator	04399
CE Guard Kit	04442
Standard Greensmower Seat Kit	04508
Light Kit	04554
8-Blade DPA Reel Mower	04651
11-Blade DPA Reel Mower	04653
14-Blade DPA Reel Mower	04655
Three-Wheel Drive Kit	04714
Anti-Bobbing Kit	04716
Dethatching Unit	04720
Tri-Roller	04722
Spiker	04723
Premium Seat	04729
Hydraulic Oil Leak Detector Kit	04730
Wireless Hourmeter	115-4754
Oil Cooler Kit	117-9314
Premium Synthetic Bio-Degradable Hydraulic Fluid (5 Gallon Pail)	119-2157
Premium Synthetic Bio-Degradable Hydraulic Fluid (55 Gallon Drum)	119-2158
Premium Armrest Kit	119-7105
Spark Arrester Kit	120-1951
Armrest Kit	121-3660
Premium Engine Oil 10w30 (55 Gallon Drum)	121-6392
Premium Engine Oil 10w30 (5 Gallon Pail)	121-6393
Weight Kit	121-6665
Hi-Back Seat Cover	133-1308
PX Hydraulic Fluid (5 Gal)	133-8086
PX Hydraulic Fluid (55 Gal)	133-8087
Bag Kit	137-8130
Bimini Shade Kit	138-8579
Tire - 20 X 10.00-8, 4ply	144-3665
MVP Kit 1000 Hour	44970
Height-of-Cut Bar	94-9010

Notes:



Count on it.