Form No. 3395-172 Rev F

TORO®

Count on it.

Parts Catalog

Groundsmaster® 4500-D

Traction Unit

Model No. 30881—Serial No. 315000201 and Up

Register at www.Toro.com.
Original Instructions (EN)

CE

3395-172 F

Ordering Replacement Parts

To order replacement parts, please supply the part number, the quantity, and the description of each part desired.

Understanding Reference Numbers

Each identified part in an illustration has a reference number. The reference number for a part also appears in the parts list, along with other information about the part.

This catalog uses two special reference number formats, one to indicate parts in a service assembly and another to indicate the quantity of a given part in an illustration.

Service Assembly Reference Numbers

Parts in service assemblies have reference numbers in the form a:b. The a represents the reference number of the entire service assembly and the b represents a sequential number unique to each part within the service assembly.

For example, a wheel assembly might be identified by reference number 6, the tire by 6:1, the valve by 6:2, and the wheel by 6:3. When you order the assembly identified by reference number 6, you receive all parts identified by reference numbers 6:1,6:2, and 6:3. However, you may also order any part individually. Reference numbers of this type appear in illustration and in parts lists.

Reference Numbers Indicating Quantity

In an illustration, if a reference number indicates more than one part, the reference number has the form nX y. The n represents the quantity of the part, the X is the multiplication symbol, and the y represents the reference number.

For example, in an illustration, the reference number 2X 37 means that two of the parts identified by reference number 37 are indicated.

Contents

Frame and Roll-Over Protection System Assembly 5
Front Frame Assembly No. 120-8086 6
Front Shroud Assembly 7
Engine Mount Assembly 8
Flywheel Assembly 9
Engine, Air Cleaner and Controller Assembly 10
Air Cleaner Assembly No. 99-5410 11
Radiator Assembly 12
Fan Mounting Assembly 14
Hydraulic Motor Assembly No. 117-4769 15
No. 1, No. 4 and No. 5 Lift Arm and Deck Assembly 16
Lift Cylinder Assembly No. 127-6429 18
Lift Cylinder Assembly No. 127-6427 19
Roller and Carrier Frame Assembly 20
Roller Assembly No. 112-5265 21
Height-of-Cut Bracket Assembly 22
Chamber, Blade and Spindle Assembly 23
Spindle Assembly No. 115-3435 24
No. 2 and 3 Lift Arm and Deck Assembly 25
Lift Cylinder Assembly No. 127-6428 27
Hydraulic Tank Assembly 28
Fuel System Assembly 29
Electrical Assembly 30
Battery Storage Box Assembly No. 115-9100 31
Storage Box Assembly No. 115-9101 32
Seat Mounting Assembly 33
Air Ride Seat Suspension Assembly No. 108-1488 34
Vinyl Premium Seat Assembly No. 117-5676 36
Console Assembly 37
Console Switch, Cover and Decal Assembly 39
Steering and Brake Assembly 40
Steering Tilt Column Assembly No. 106-3622 42
Steering Valve Assembly No. 114-8119 43
Pedal Assembly 44
Hood Assembly 45
Front Wheel Drive Assembly 46
Planetary Assembly No. 105-4500-03 47
Brake Assembly No. 100-3070-03 48
Hydraulic Piston Motor Assembly No. 121-3100 49
Brake Assembly No. 100-3069-03 50
Rear Axle Assembly 51
Hydraulic Steer Cylinder Assembly No. 127-6431 53
Piston Motor Assembly No. 121-3101 54
Bevel Pinion Shaft Assembly Rear Axle Assembly No. 110-4750 55
Differential Assembly Rear Axle Assembly No. 110-4750 56
Axle Support Assembly Rear Axle Assembly No. 110-4750 57
Bevel Gear Case Assembly Rear Axle Assembly No. 110-4750 58
Bevel Gear Shaft Assembly Rear Axle Assembly No. 110-4750 59
Axle Case Assembly Rear Axle Assembly No. 110-4750 60
Axle Assembly Rear Axle Assembly No. 110-4750 61
Hydraulic System Assembly 62
Piston Pump Assembly No. 120-9059 64
Four Section Pump Assembly No. 114-4189 66
Hydraulic Valve Mounting Assembly 67

© 2025—The Toro® Company
8111 Lyndale Avenue South
Bloomington, MN 55420

Contact us at www.Toro.com.
Printed in the USA.
All Rights Reserved

Contents (continued)

Mow Manifold Assembly No. 120-8064 69
Lift Manifold Assembly No. 117-2388 70
Junction Manifold Assembly No. 117-2394 71
Junction Manifold Assembly 72
Fan Drive Manifold Assembly No. 117-2395 73
Rear Traction Manifold Assembly No. 121-3078 74
3 Way Manifold Valve Assembly No. 121-3077 75
Hydraulic Traction Circuit Assembly 76
Hydraulic Steering Circuit Assembly 77
Hydraulic Lift Circuit Assembly 78
Deck Lift Hydraulic Lift Circuit Assembly 79
Hydraulic Mow Circuit Assembly 80
Deck No. 1, 4 and 5 Hydraulic Assembly 82
Gear Motor Assembly No. 117-5141 83
Deck No. 2 and 3 Hydraulic Assembly 84
Main Wire Harness Assembly 85
Engine Wire Harness Assembly 86
Cylinder Block Assembly 87
Gear Housing Assembly 88
Flywheel Housing and Oil Sump Assembly 89
Cylinder Head and Cover Assembly 90
Suction Manifold Assembly 92
Exhaust Manifold Assembly 93
Diesel Particulate Filter Assembly 94
Camshaft and Driving Gear Assembly 96
Turbine Assembly 97
Crankshaft and Piston Assembly 98
Lubrication and Oil System Assembly 99
Lubrication Oil Line Assembly 100
Cooling Water System Assembly 101
Fuel System Assembly 102
Fuel Injection Valve Assembly 103
Fuel Line Assembly 104
Starting Motor Assembly 105
Generator Assembly 106
Electric Parts Assembly 107
Gasket Set 108
Attachments and Accessories 110

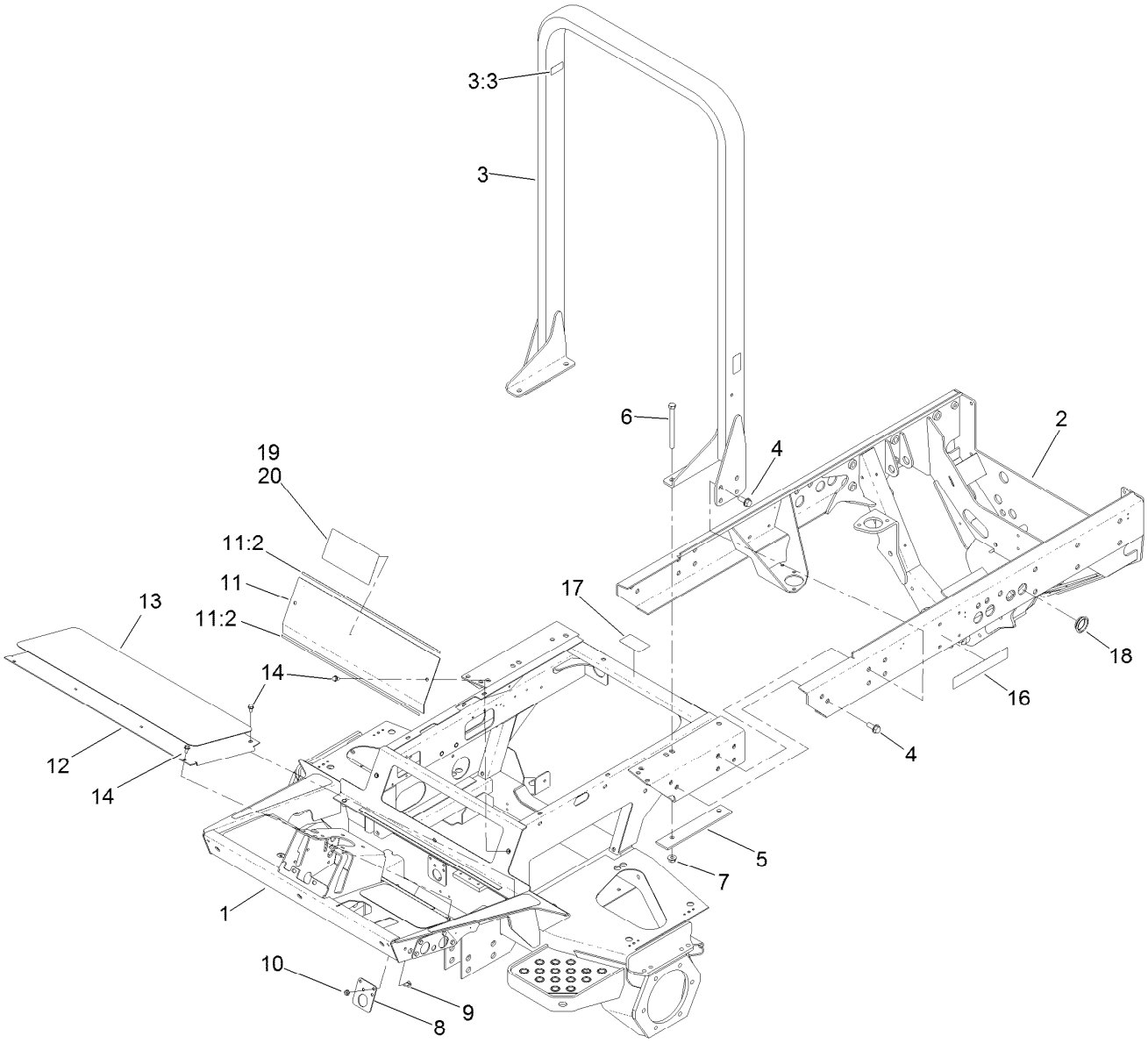

Frame and Roll-Over Protection System Assembly

Ref.	Part Number	Qty.	Description
1	120-8086	1	Front Frame ASM
2	120-8007-03	1	Frame-Rear
3	108-4018	1	ROPS ASM
3:3	98-4387	1	Decal-Protection, Ear
4	3234-38	12	Screw-HHF
5	104-5584-03	2	Plate-Reinforcement, ROPS
6	325-20	4	Screw-HH
7	32128-49	4	Nut-HHF
8	104-5516-01	1	Support-Tube
9	3230-23	2	Bolt-CARR
10	32128-20	2	Nut-HF

Ref.	Part Number	Qty.	Description
11	119-0006	1	Access Plate ASM
11:2	105-9860	2	Seal-Foam
12	75-1410-01	1	Plate-Access, Floor
13	125-4614	1	Tread-Foot, Center
14	3234-7	6	Screw-HHF
16	72-3560	2	Decal
17	106-6754	1	Decal-Danger
18	105-9194	4	Plug
19	127-6447	1	Decal-Danger, CE (16 DEG)
20	112-5297	1	Decal-Danger

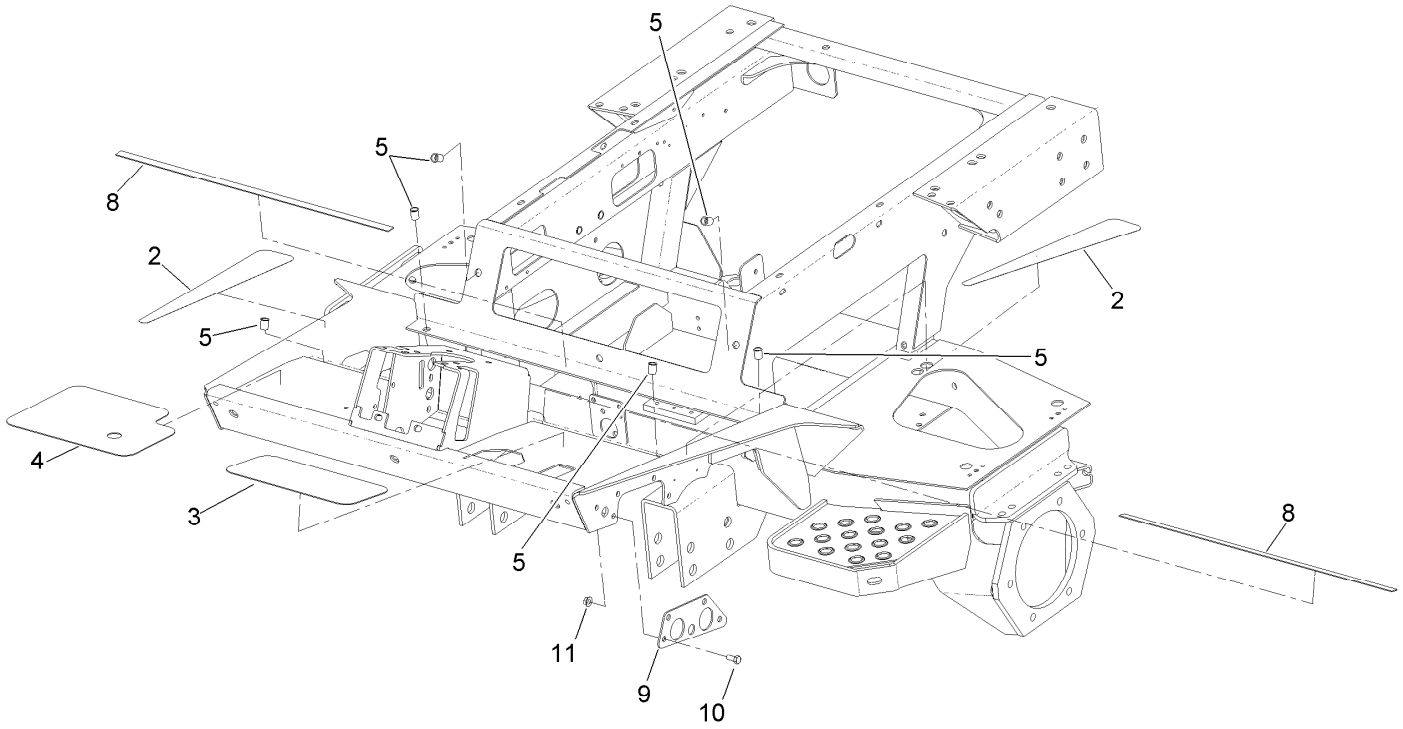

Front Frame Assembly No. 120-8086

Ref.	*Part Number*	*Qty.*	*Description*
2	93-7592	2	Tread-Rest, Foot
3	75-0620	1	Tread-Foot, LH
4	104-5223	1	Tread-Foot, RH
5	32148-7	10	Nut-Clinch
8	105-9860	2	Seal-Foam
9	106-7794-01	2	Plate-Mount, HYD Fitting
10	322-3	8	Screw-HH
11	32128-20	8	Nut-HF

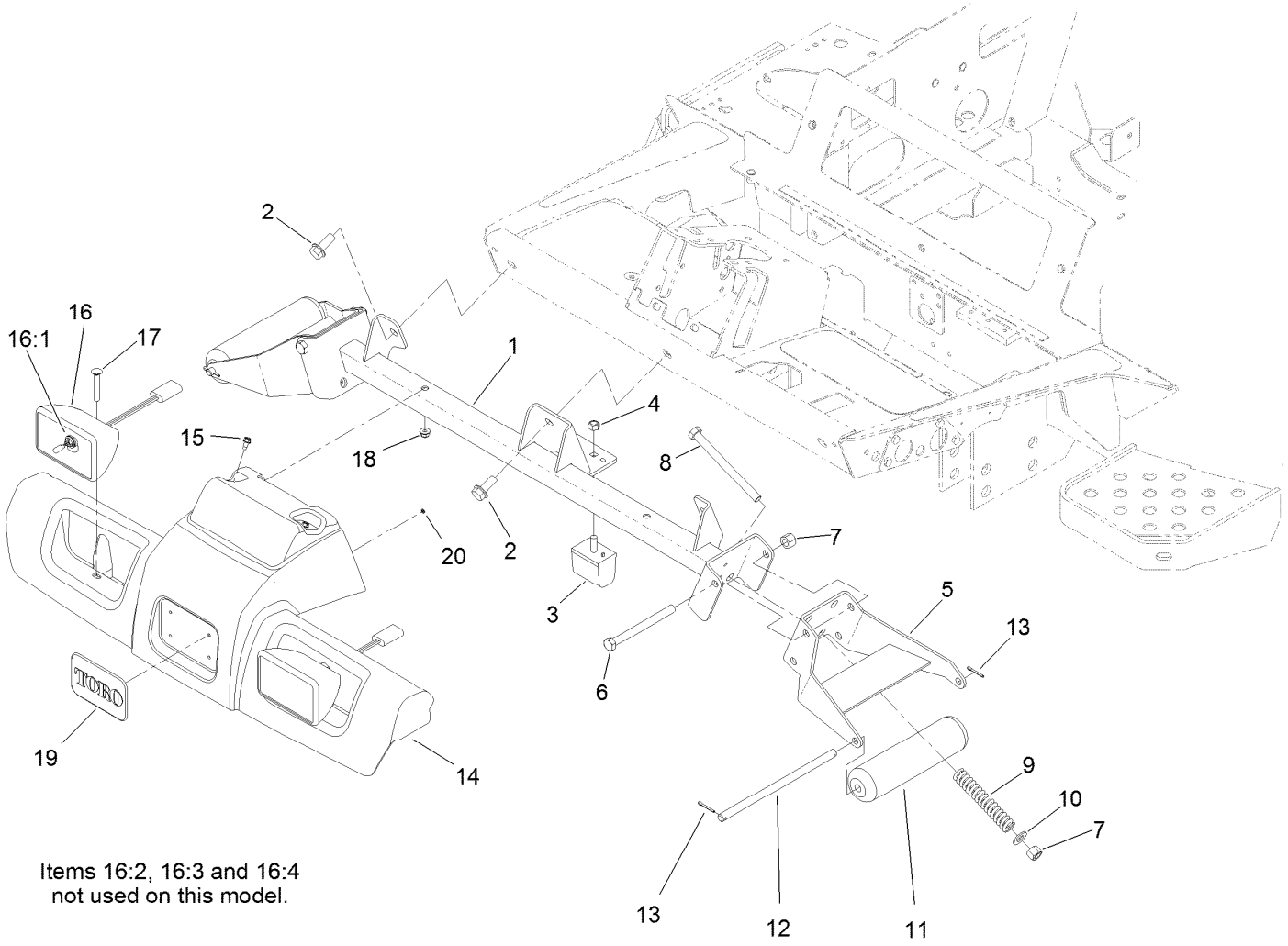

Items 16:2, 16:3 and 16:4
not used on this model.

Front Shroud Assembly

Ref.	Part Number	Qty.	Description
1	117-4760-01	1	Support-Roller
2	3234-38	3	Screw-HHF
3	87-3470	1	Bumper
4	33025-00	1	Nut-Lock, NI
5	105-3996-01	2	Support-Roller
6	325-22	2	Screw-HH
7	3296-23	4	Nut-Lock, NI
8	325-20	2	Screw-HH
9	105-3970	2	Spring-Compression
10	3256-26	2	Washer-Flat
11	105-9816	2	Roller-Plastic
12	104-5545	2	Shaft-Roller

Ref.	Part Number	Qty.	Description
13	3272-11	4	Pin-Cotter
14	115-9137	1	Shroud-Platform
15	32104-17	2	Screw-HWH
16	94-9024	2	Lamp ASM
16:1	95-0909	1	Lamp-12 Volt
16:2	3230-28	1	Screw-CARR
16:3	3253-33	1	Washer-Lock
16:4	3217-6	1	Nut-Hex
17	3230-7	2	Bolt-CARR
18	104-8300	2	Nut-HF, NI
19	93-6028	1	Plate-Logo
20	3254-9	4	Washer-Lock, Internal

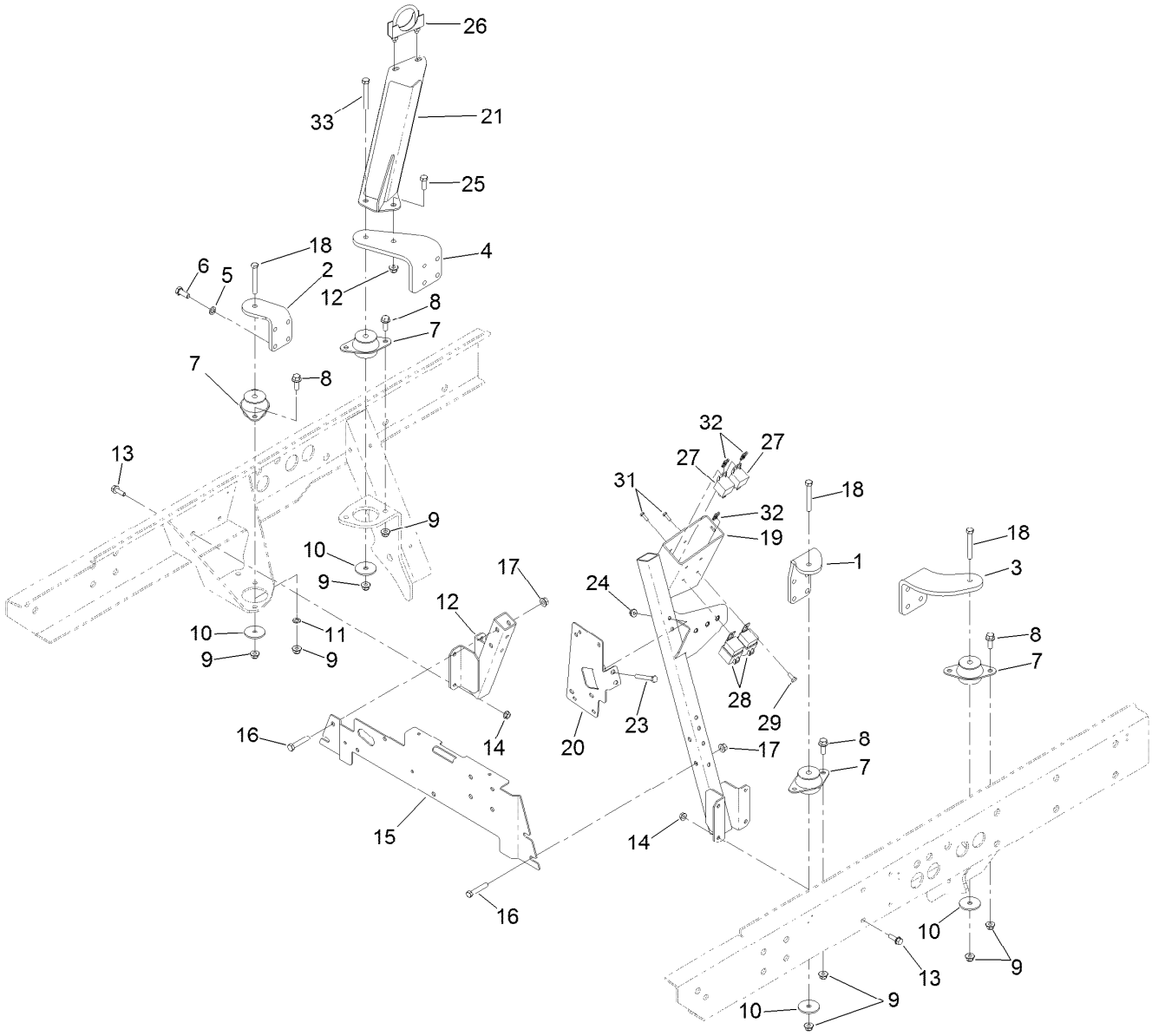

Engine Mount Assembly

Ref.	Part Number	Qty.	Description
1	120-8001-03	1	Mount-Engine, Front (LH)
2	120-8002-03	1	Mount-Engine, Front (RH)
3	120-8003-03	1	Mount-Engine, Rear (LH)
4	120-8004-03	1	Mount-Engine, Rear (RH)
5	48-9590	16	Washer-Lock
6	33115-025	16	Screw-HH
7	53-9682	4	Mount-Engine
8	3234-11	8	Screw-HHF
9	104-8301	13	Nut-HF, NI
10	63-7400	4	Washer-Rebound
11	3255-9	1	Washer-Lock
12	104-5420-03	1	Support-Battery
13	3234-29	8	Screw-HHF
14	32128-20	8	Nut-HF
15	114-8134-03	1	Bracket-Support
16	323-10	4	Screw-HH

Ref.	Part Number	Qty.	Description
17	32128-21	4	Nut-HF Lock
18	323-13	3	Screw-HH
19	121-3140-03	1	Bracket-Mount, Air Cleaner
20	121-3102-03	1	Bracket-Controller
21	121-3098-03	1	Support-Tailpipe
23	322-11	2	Screw-HH
24	104-8300	2	Nut-HF, NI
25	323-6	1	Screw-HH
26	18-2130	1	Clamp
27	99-7435	2	Relay
28	99-7430	2	Relay-Mini
29	321-3	2	Screw-HH
31	3290-134	2	Screw
32	3290-277	4	Nut-Speed
33	323-14	1	Screw-HH

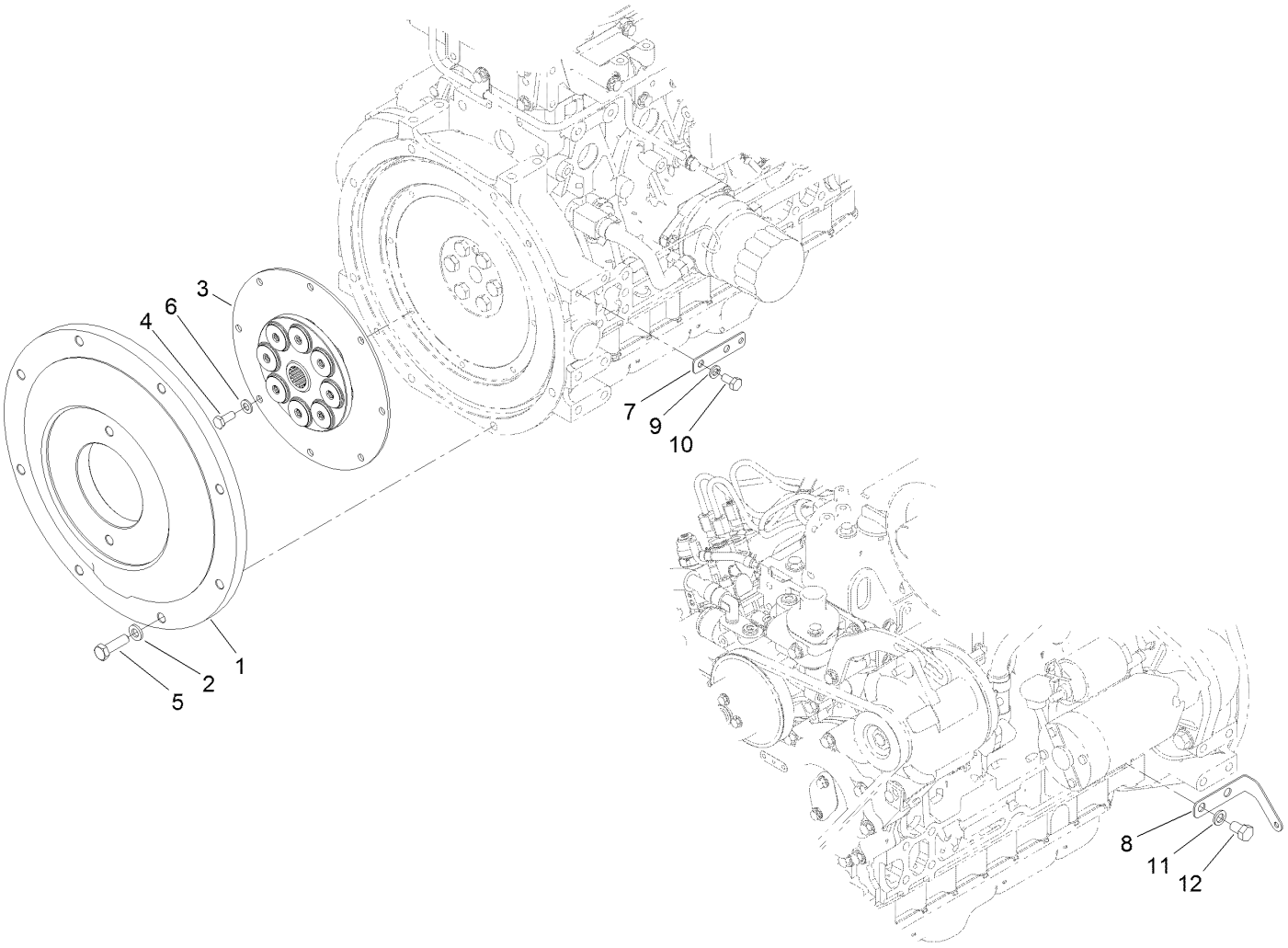

Flywheel Assembly

Ref.	*Part Number*	*Qty.*	*Description*
1	115-6657-03	1	Plate-Flywheel
2	107-1413	8	Washer-Hardened
3	120-4176	1	Coupling-Spring, Flywheel
4	99-5132	8	Bolt
5	117-5663	8	Screw-HH
6	87-7510	8	Washer-Flat
7	121-5636	1	Tab-Harness
8	121-6580	1	Bracket-Harness
9	3253-4	2	Washer-Lock
10	33114-016	2	Screw-HH
11	48-9590	2	Washer-Lock
12	33115-016	2	Screw-HH

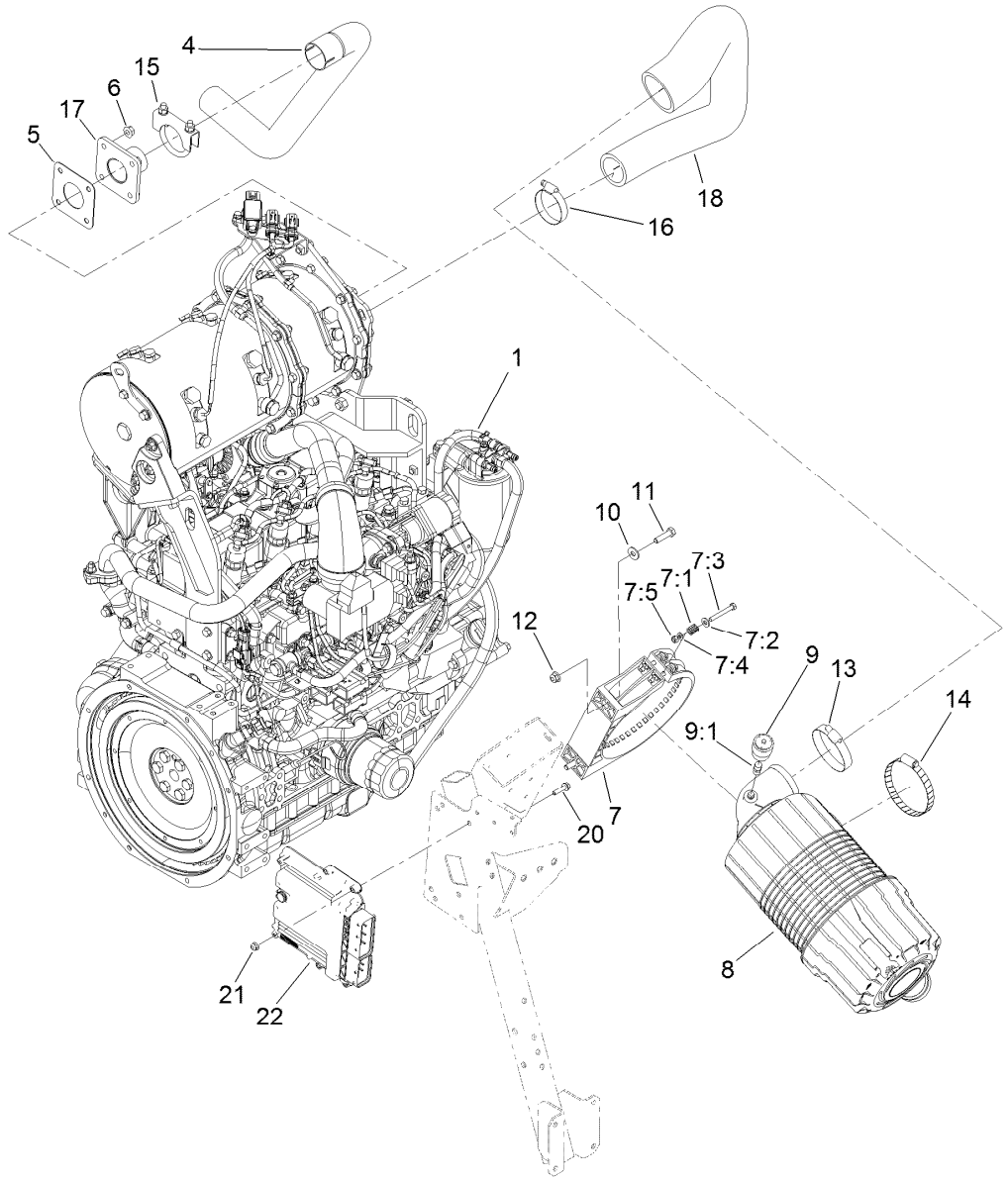

Engine, Air Cleaner and Controller Assembly

Ref.	Part Number	Qty.	Description
1	120-4111	1	Engine ASM
4	121-3061	1	Pipe-Exhaust
5	121-3058	1	Gasket-Exhaust
6	33004-00	4	Nut-HF
7	99-5414	1	Strap-Cleaner, Air
7:1	108-1512	2	Spring
7:2	3256-22	2	Washer-Flat
7:3	33113-050	2	Screw-HH
7:4	33093-00	2	Washer-Flat
7:5	33023-00	2	Nut-Lock
8	99-5410	1	Air Cleaner ASM
9	104-3563	1	Indicator
9:1	94-1416	1	Adapter-Indicator

Ref.	Part Number	Qty.	Description
10	3256-3	2	Washer-Flat
11	322-6	2	Screw-HH
12	104-8300	2	Nut-HF, NI
13	2412-125	1	Clamp-Hose
14	2412-110	1	Clamp-Band/Screw
15	18-2130	1	Clamp
16	2412-130	1	Clamp-Hose
17	121-3060	1	Flange-Exhaust
18	121-3142	1	Hose-Air Cleaner, Outlet
20	120-4654	4	Screw-HHF
21	104-7201	4	Nut-HF, NI
22	121-5592	1	Electronic Control Unit

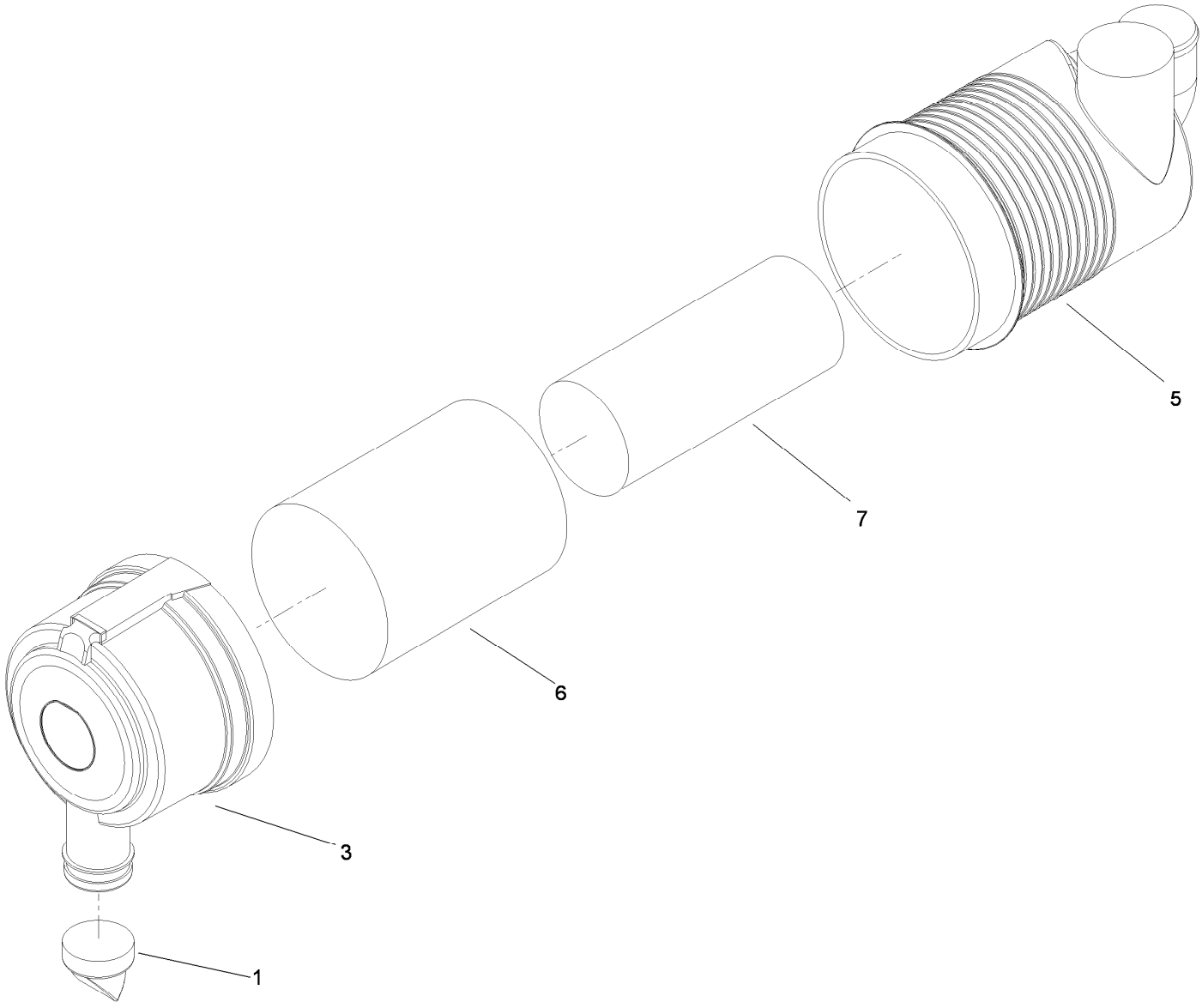

Air Cleaner Assembly No. 99-5410

Ref.	*Part Number*	*Qty.*	*Description*
1	104-4258	1	Valve-Vacuator
3	104-4259	1	Cover
5		1	Body ASM ●
6	108-3814	1	Filter-Air
7	108-3816	1	Filter-Air

● Not serviced separately

Radiator Assembly

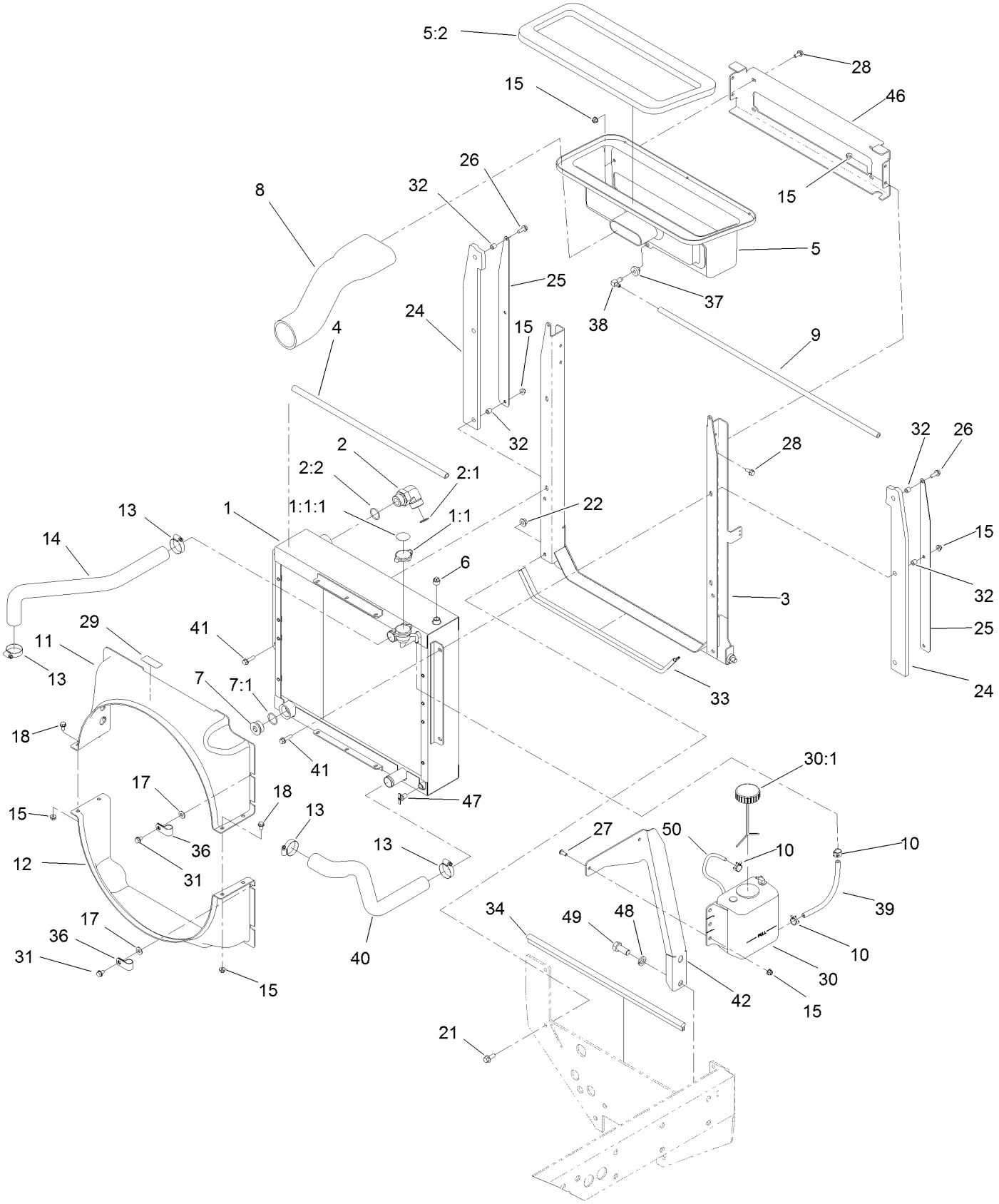

Radiator Assembly (continued)

Ref.	Part Number	Qty.	Description
1	121-3080	1	Radiator/Oil Cooler
1:1	115-7766	1	Cap-Radiator
1:1:1	106-6755	1	Decal-Cap, Radiator
2	340-129	2	Fitting-Elbow, 90 DEG
2:1	237-146	1	O-Ring
2:2	340-65	1	O-Ring
3	121-3084-03	1	Mount-Radiator
4	114-3828	1	Seal-Bulb
5	115-4363	1	Plenum ASM
5:2	115-4393	1	Seal-Plenum
6	281-13	1	Plug-Pipe
7	105-3921	1	Fitting-Plug
7:1	237-146	1	O-Ring
8	121-3143	1	Hose-Air Cleaner, Inlet
9	110-3258	1	Hose-Fuel
10	92-2379	4	Clamp-Hose
11	125-4615	1	Shroud-Radiator, Upper
12	121-3106	1	Shroud-Radiator, Lower
13	2412-111	4	Clamp-Hose, W/Liner
14	121-1476	1	Hose-Radiator, Upper
15	104-8300	22	Nut-HF, NI
17	3256-3	8	Washer-Flat
18	3234-7	4	Screw-HHF
21	3234-11	4	Screw-HHF
22	32128-43	4	Nut-Flange
24	121-3087	2	Seal-Foam, Hood
25	121-3086-03	2	Bracket-Seal, Hood
26	32144-41	2	Screw-Taptite
27	3274-55	2	Screw-HSBH
28	3234-47	12	Screw-HHF
29	117-4766	1	Decal-Warning, Fan
30	120-5571	1	Coolant Reservoir ASM
30:1	87-7050	1	Cap-Reservoir
31	3234-30	8	Screw-HHF
32	1-603903	6	Spacer
33	117-4782	1	Seal-Bulb
34	105-9858	1	Seal-Bulb
36	2412-81	2	Clamp-R
37	46-6560	1	Bushing
38	46-6550	1	Fitting-Elbow, 90 DEG
39	109-0282	1	Hose-Fuel
40	121-1477	1	Hose-Radiator, Lower
41	3234-36	4	Screw-HHF
42	125-4609-03	1	Bracket-Mount, Tank
46	121-3085	1	Plate-Crossover
47	304-46	1	Draincock
48	3253-8	2	Washer-Lock
49	327-4	2	Screw-HH
50	109-0273	1	Hose-Fuel

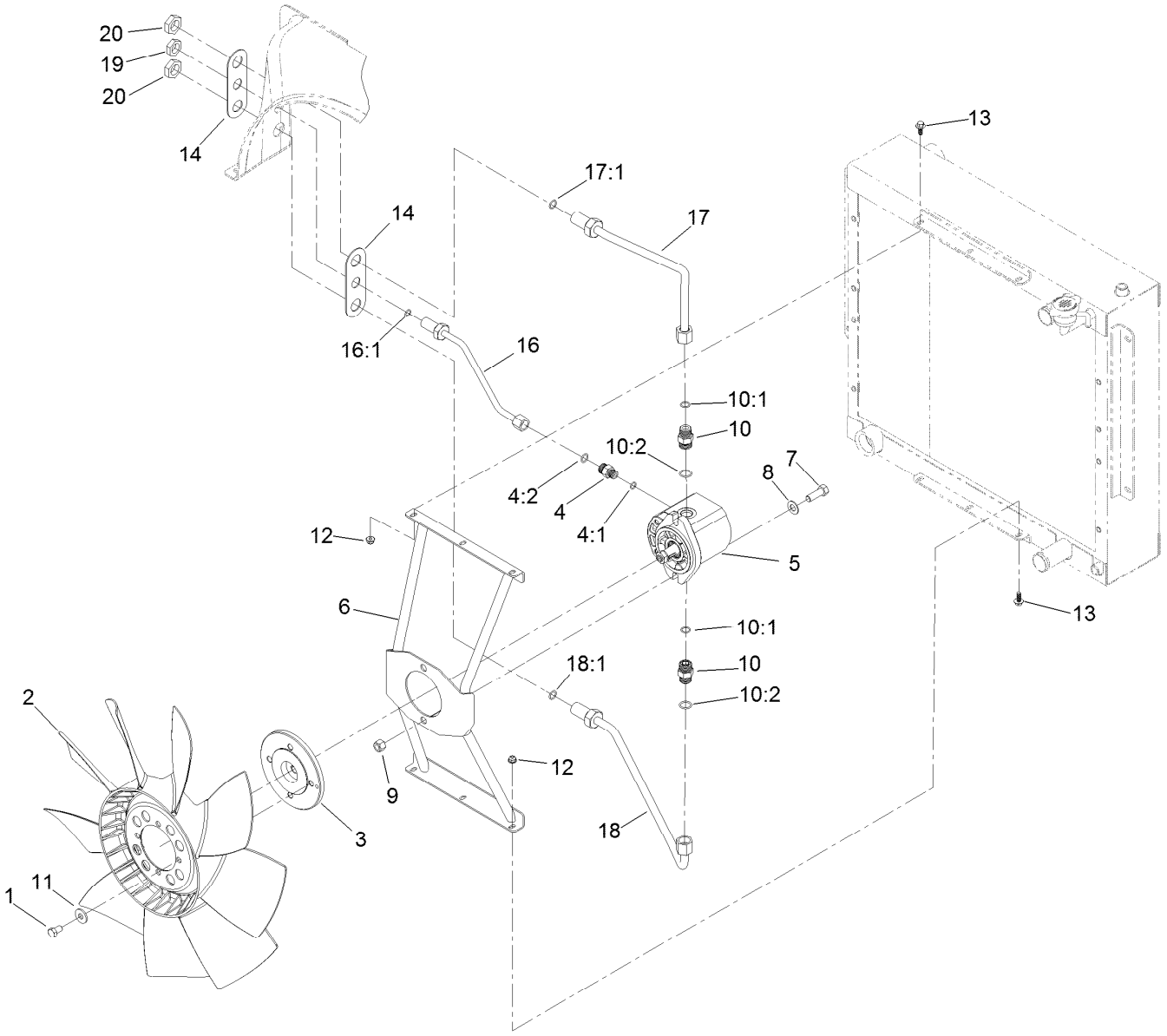

Fan Mounting Assembly

Ref.	Part Number	Qty.	Description
1	115-8486	4	Screw-HH
2	114-3825	1	Fan
3	117-2364	1	Hub-Fan
4	340-2	1	Fitting-Straight
4:1	237-22	1	O-Ring
4:2	237-42	1	O-Ring
5	117-4769	1	HYD Motor ASM
6	120-8935-03	1	Bracket-Fan
7	324-5	2	Screw-HH
8	3256-25	2	Washer-Flat
9	3296-48	2	Nut-Hex
10	340-4	2	Fitting-Straight
10:1	237-30	1	O-Ring

Ref.	Part Number	Qty.	Description
10:2	237-79	1	O-Ring
11	80-6990	4	Washer-Hardened
12	104-7201	6	Nut-HF, NI
13	99-6810	6	Screw-HHF
14	125-4610	2	Shim-Support
16	125-4598	1	Tube ASM
16:1	237-22	1	O-Ring
17	125-4596	1	Tube ASM
17:1	237-30	1	O-Ring
18	125-4597	1	Tube ASM
18:1	237-30	1	O-Ring
19	340-70	1	Nut-Lock
20	340-127	2	Nut-Bulkhead

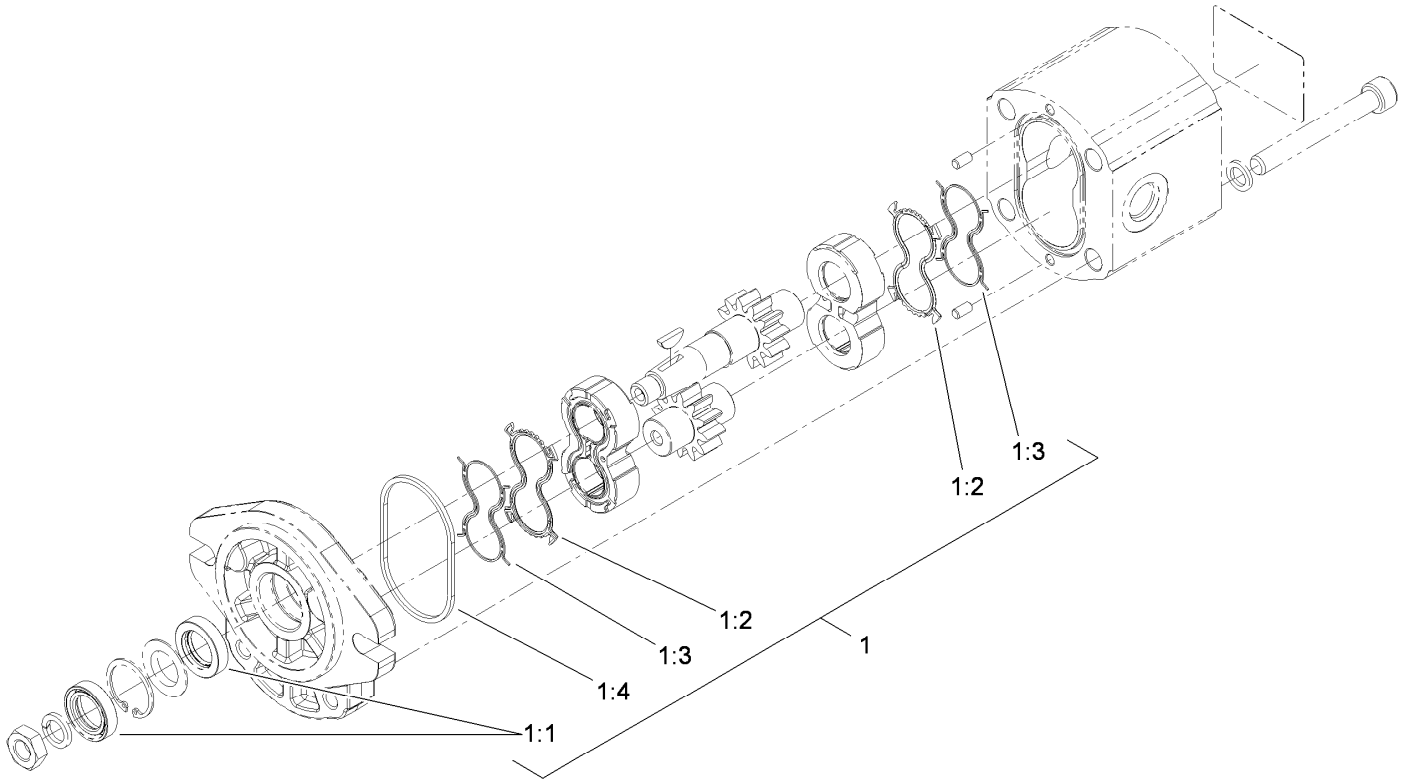

Hydraulic Motor Assembly No. 117-4769

Ref.	*Part Number*	*Qty.*	*Description*
1	115-4110	1	Seal Kit
1:1		2	Seal-Shaft ●
1:2		2	Seal-Plate, Balancing ●
1:3		2	Seal-Anti Extrusion ●
1:4		2	O-Ring (Housing) ●

● Not serviced separately

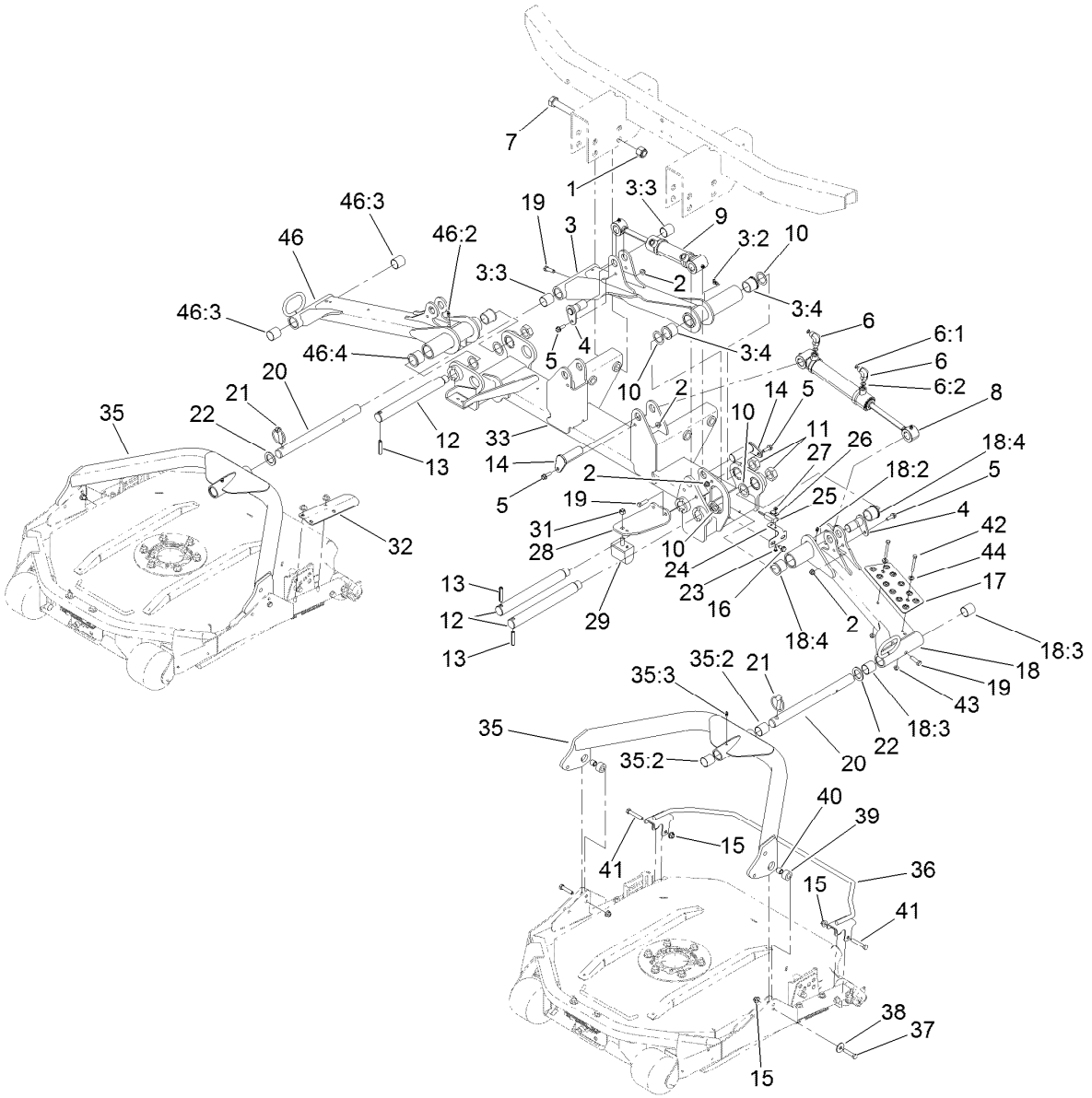

No. 1, No. 4 and No. 5 Lift Arm and Deck Assembly

Ref.	*Part Number*	*Qty.*	*Description*
1	3296-51	4	Nut-Lock, NI
2	104-8300	6	Nut-HF, NI
3	108-4032	1	No. 1 Lift Arm ASM
3:2	302-60	1	Fitting-Grease
3:3	108-4000	2	Bushing
3:4	104-0015	2	Bushing-Flange
4	104-5525	3	Pin-Cylinder
5	3234-17	6	Screw-HHF
6	340-77	6	Fitting-Elbow, 90 DEG
6:1	237-22	1	O-Ring
6:2	237-42	1	O-Ring
7	328-7	4	Screw-HH
8	127-6429	2	Lift Cylinder ASM
9	127-6427	1	Lift Cylinder ASM
10	76-2980	6	Washer-Thrust
11	3296-49	3	Nut-Lock, NI
12	95-7158	3	Pin-Pivot
13	32121-110	3	Pin-Roll, Slotted
14	125-1906	3	Pin-Cylinder
15	104-8301	12	Nut-HF, NI
16	32104-32	4	Screw-HWH

Ref.	*Part Number*	*Qty.*	*Description*
17	105-3987-03	1	Plate-Skid
18	108-4033	1	No. 4 Lift Arm ASM
18:2	302-5	1	Fitting-Grease
18:3	108-4000	2	Bushing
18:4	104-0015	2	Bushing-Flange
19	323-7	5	Screw-HH
20	108-4023	3	Shaft-Carrier, Pivot
21	283-71	3	Pin-Lynch
22	3-6781	3	Washer-Flat
23	104-1450	2	Bolt-CARR
24	104-5585	2	Bracket-Switch
25	106-9288	2	Sensor-Proximity, Ferrous
26	100-4872	2	Plate-Switch, Neutral
27	32149-7	2	Nut-Keps
28	104-5689-03	1	Bracket-Support, Bumper
29	87-3470	2	Bumper
31	33025-00	2	Nut-Lock, NI
32	105-9831-03	2	Bracket-Bumper, No. 1
33	104-5680-03	1	Frame-Carrier, Front
35	115-3453	3	Carrier Frame ASM
35:2	108-4000	2	Bushing

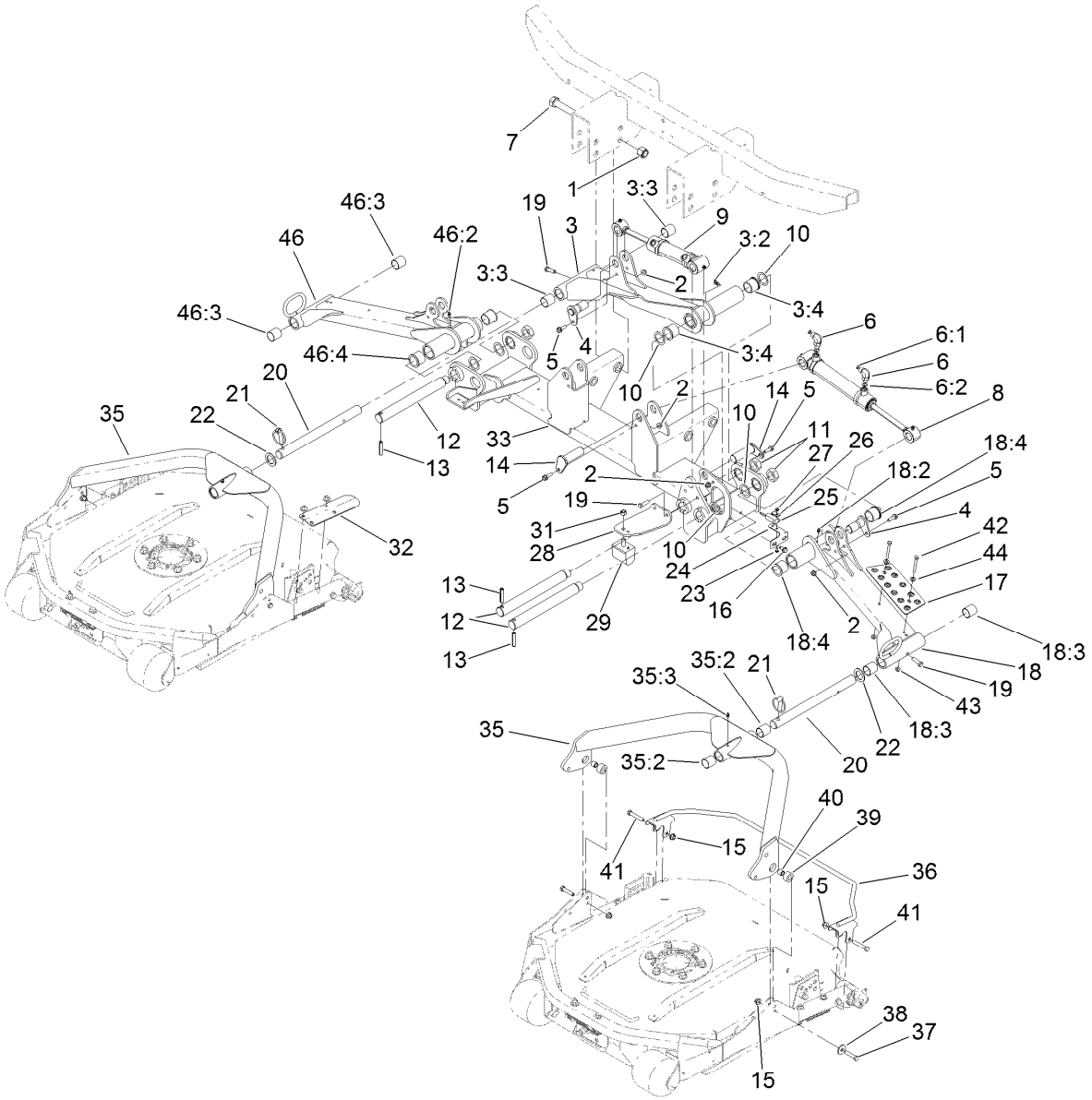

No. 1, No. 4 and No. 5 Lift Arm and Deck Assembly (continued)

Ref.	*Part Number*	*Qty.*	*Description*
35:3	302-5	1	Fitting-Grease
36	112-9900-03	2	Guard-Foot
37	323-52	6	Screw-HH
38	93-8806	6	Washer-Hardened
39	105-9823	6	Bushing-Carrier
40	105-9822	6	Spacer
41	323-11	4	Screw-HH

Ref.	*Part Number*	*Qty.*	*Description*
42	321-15	2	Screw-HH
43	32128-33	2	Nut-HF
44	3256-23	2	Washer-Plain
46	108-4034	1	No. 5 Lift Arm ASM
46:2	302-5	1	Fitting-Grease
46:3	108-4000	2	Bushing
46:4	104-0015	2	Bushing-Flange

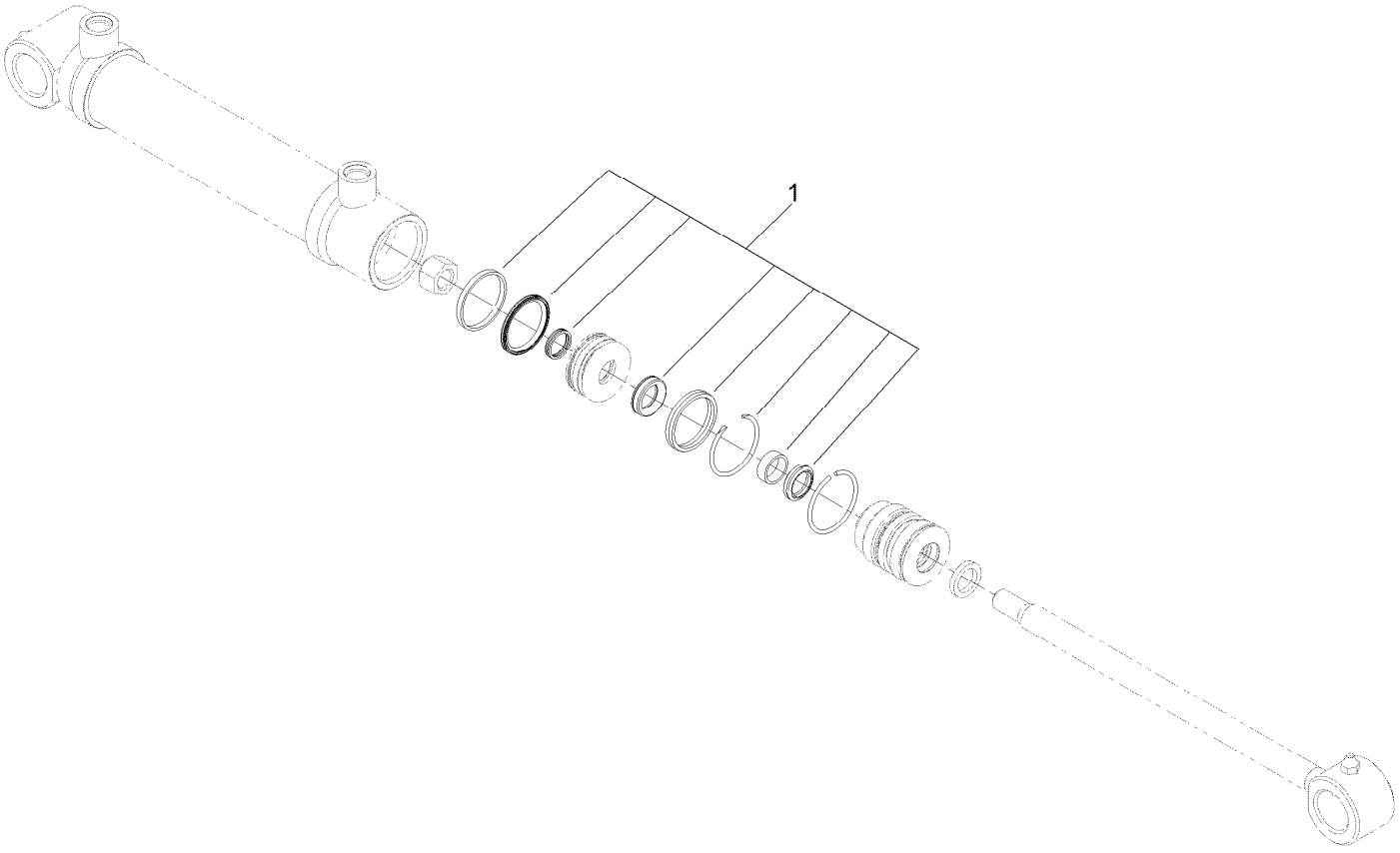

Lift Cylinder Assembly No. 127-6429

Ref.	*Part Number*	*Qty.*	*Description*
1	131-7755	1	Cylinder Seal Kit

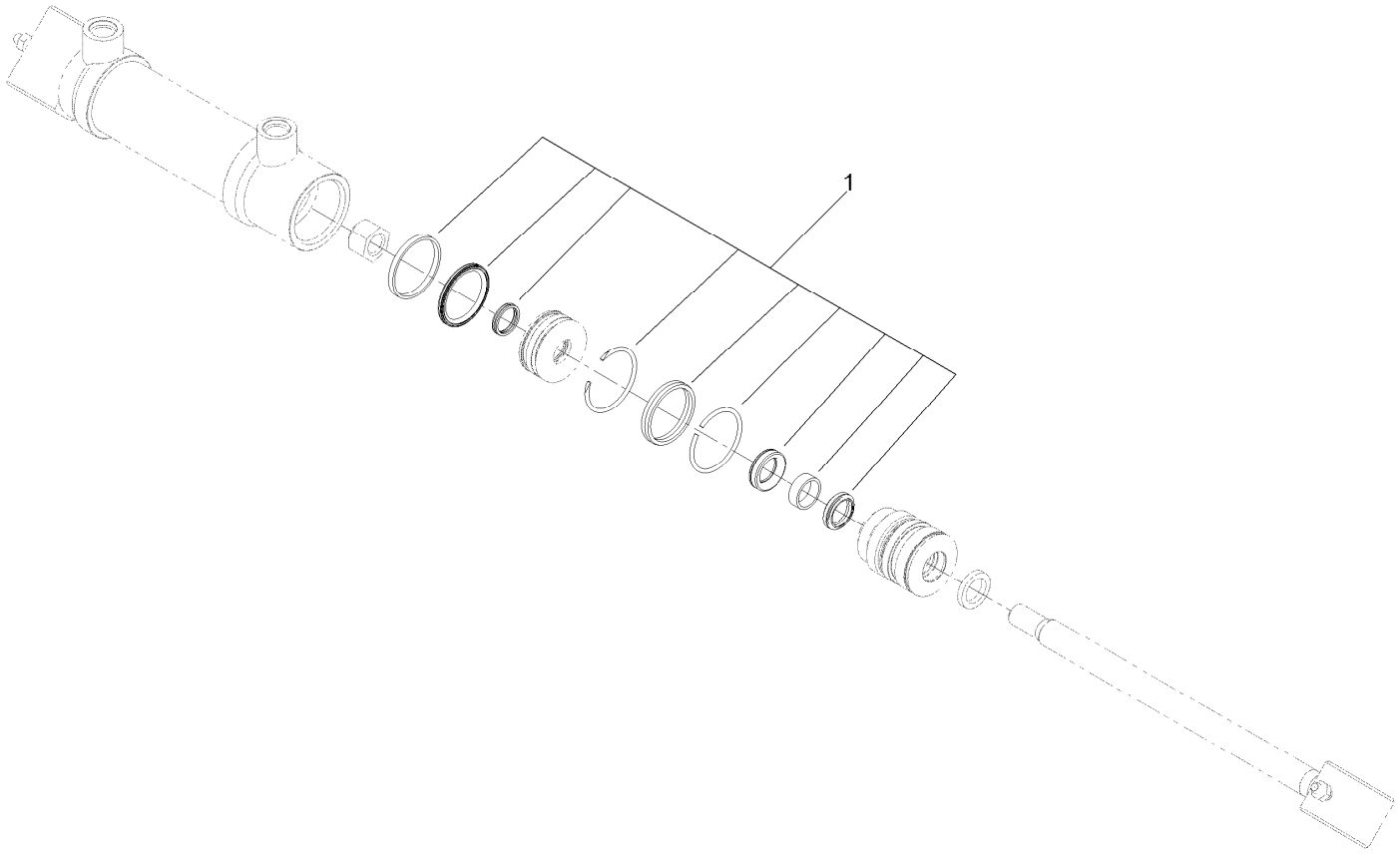

Lift Cylinder Assembly No. 127-6427

Ref.	*Part Number*	*Qty.*	*Description*
1	131-7755	1	Cylinder Seal Kit

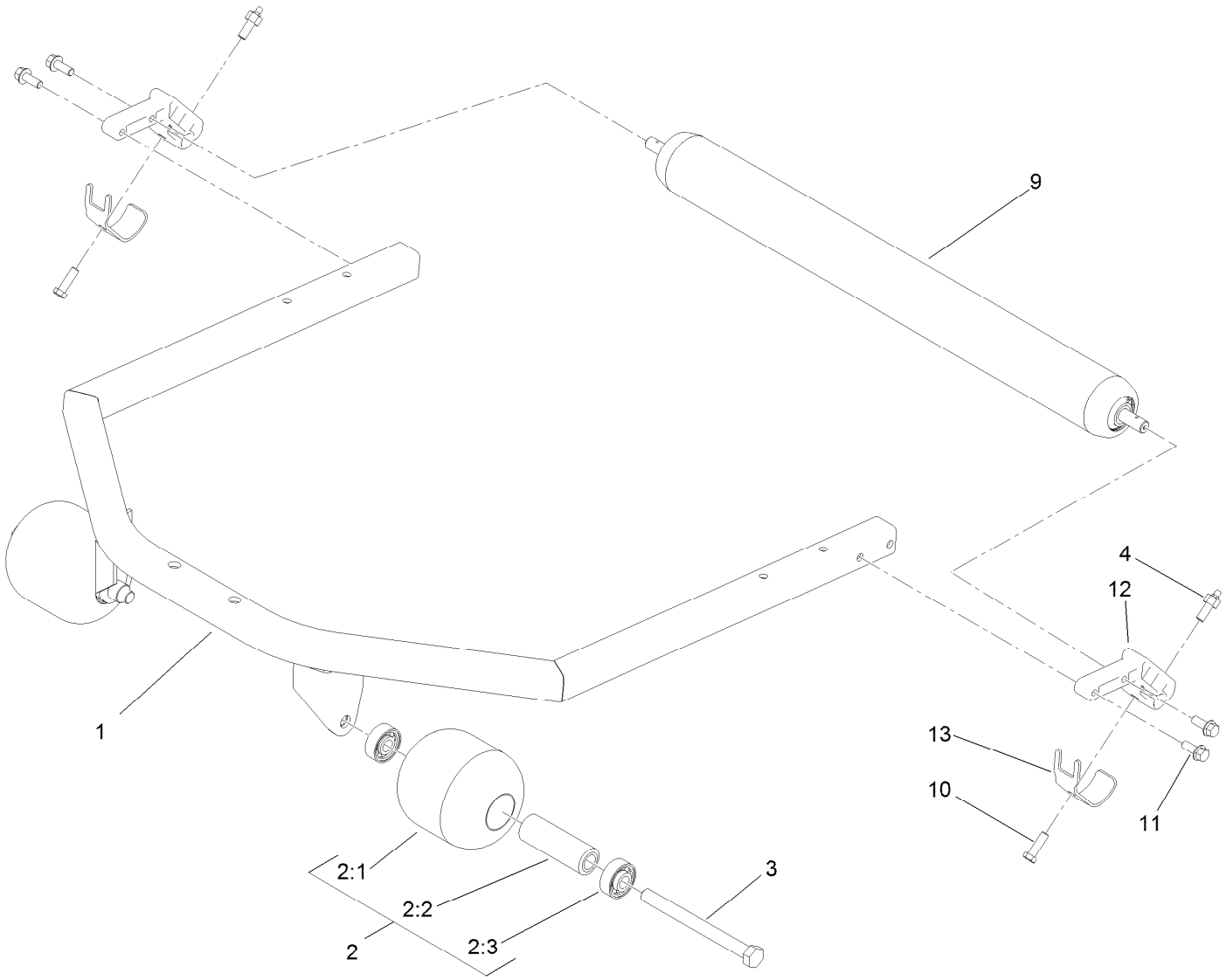

Roller and Carrier Frame Assembly

Ref.	*Part Number*	*Qty.*	*Description*
1	100-5780-03	1	Frame-Deck
2	115-3418	2	Roller ASM
2:1	104-1093	1	Roller
2:2	100-5762	1	Spacer-Bearing
2:3	120-3366	2	Bearing
3	327-15	2	Screw-HH
4	127-6422	2	Screw-Grease, Roller
9	112-5265	1	Roller ASM
10	323-7	2	Screw-HH
11	3234-11	4	Screw-HHF
12	112-5268	2	Mount-Roller
13	107-7816	2	Bracket-Skid

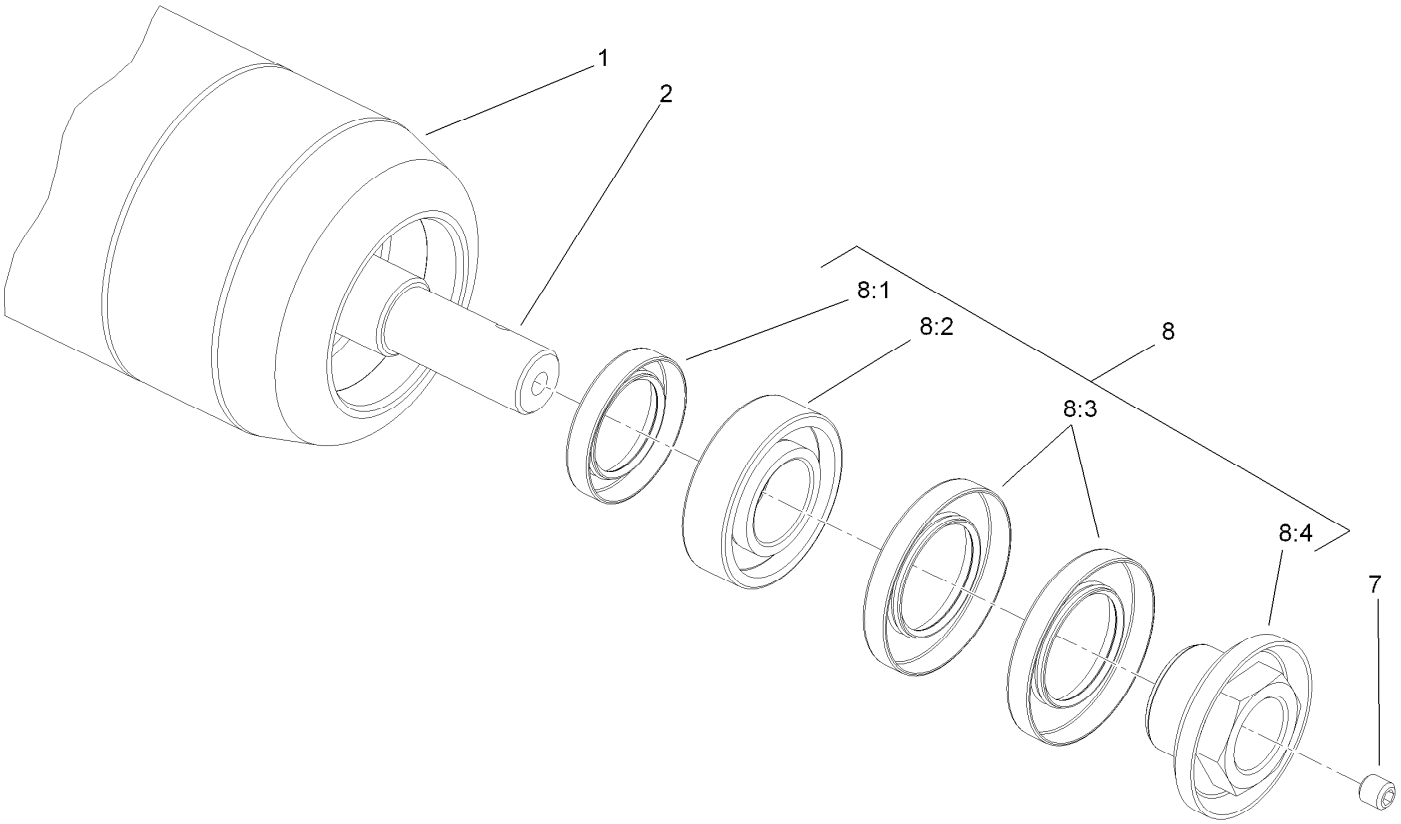

Roller Assembly No. 112-5265

Ref.	*Part Number*	*Qty.*	*Description*
1	112-5274-03	1	Tube ASM
2	117-5100	1	Shaft-Roller, Rear
7	108-0989	2	Screw-Set
8	114-5430	1	Roller Rebuild Kit
8:1	114-3717	2	Seal-Oil
8:2	112-5290	2	Bearing-Steel, Stainless
8:3	112-7494	4	Seal
8:4	114-5411	2	Nut-Lock, Bearing

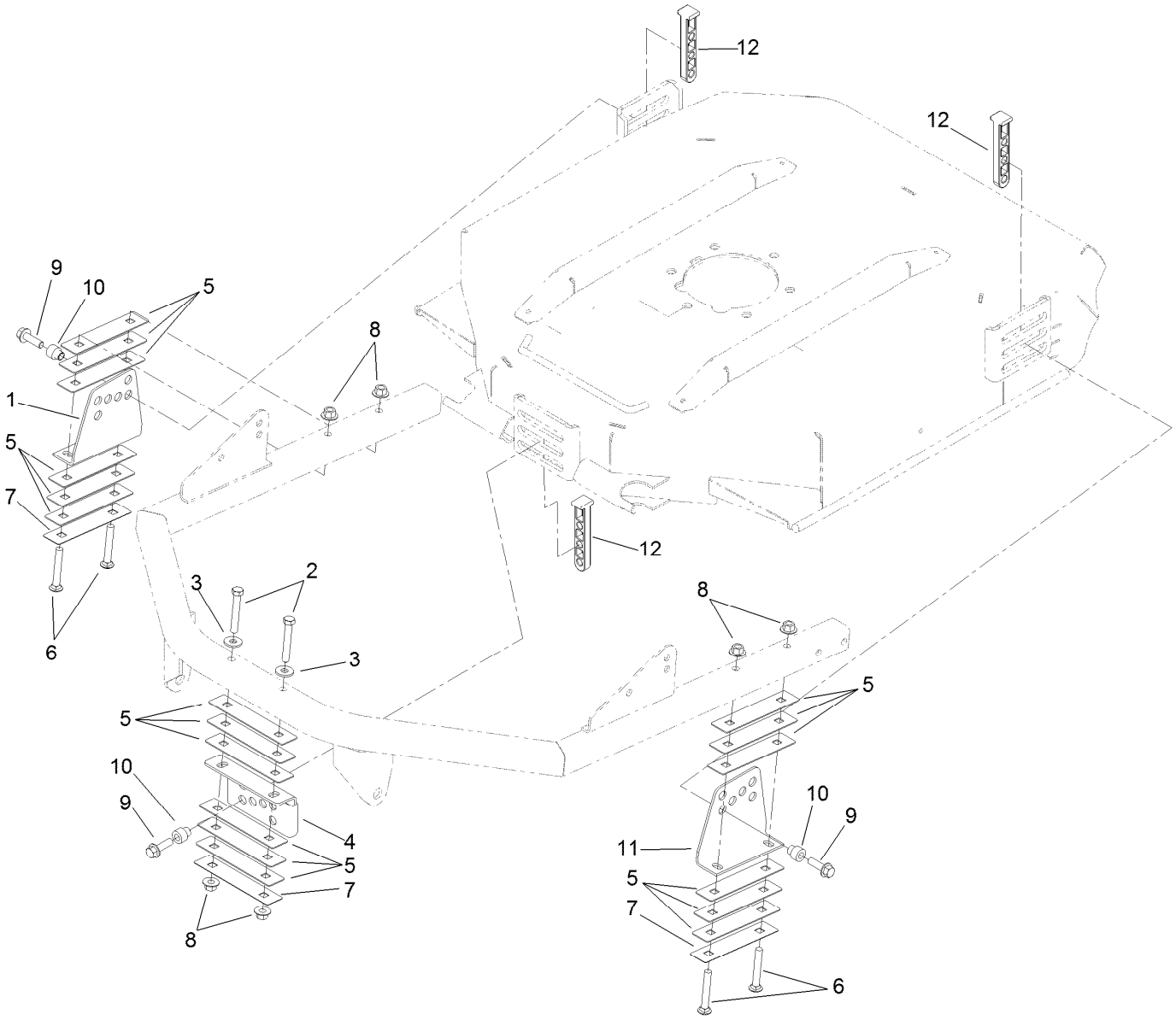

Height-of-Cut Bracket Assembly

Ref.	*Part Number*	*Qty.*	*Description*
1	100-5797-03	1	Bracket-HOC, RH
2	323-12	2	Screw-HH
3	80-6990	2	Washer-Hardened
4	104-1052-03	1	Bracket-HOC, Front
5	100-5799	18	Shim-HOC, .060 Inch
6	3231-9	4	Screw-CARR
7	104-4641	3	Shim-HOC, .030 Inch
8	32128-43	6	Nut-Flange
9	3234-24	3	Screw-HHF
10	121-3575	3	Spacer-HOC
11	104-4624-03	1	Bracket-HOC, LH
12	125-2011	3	Bracket-HOC

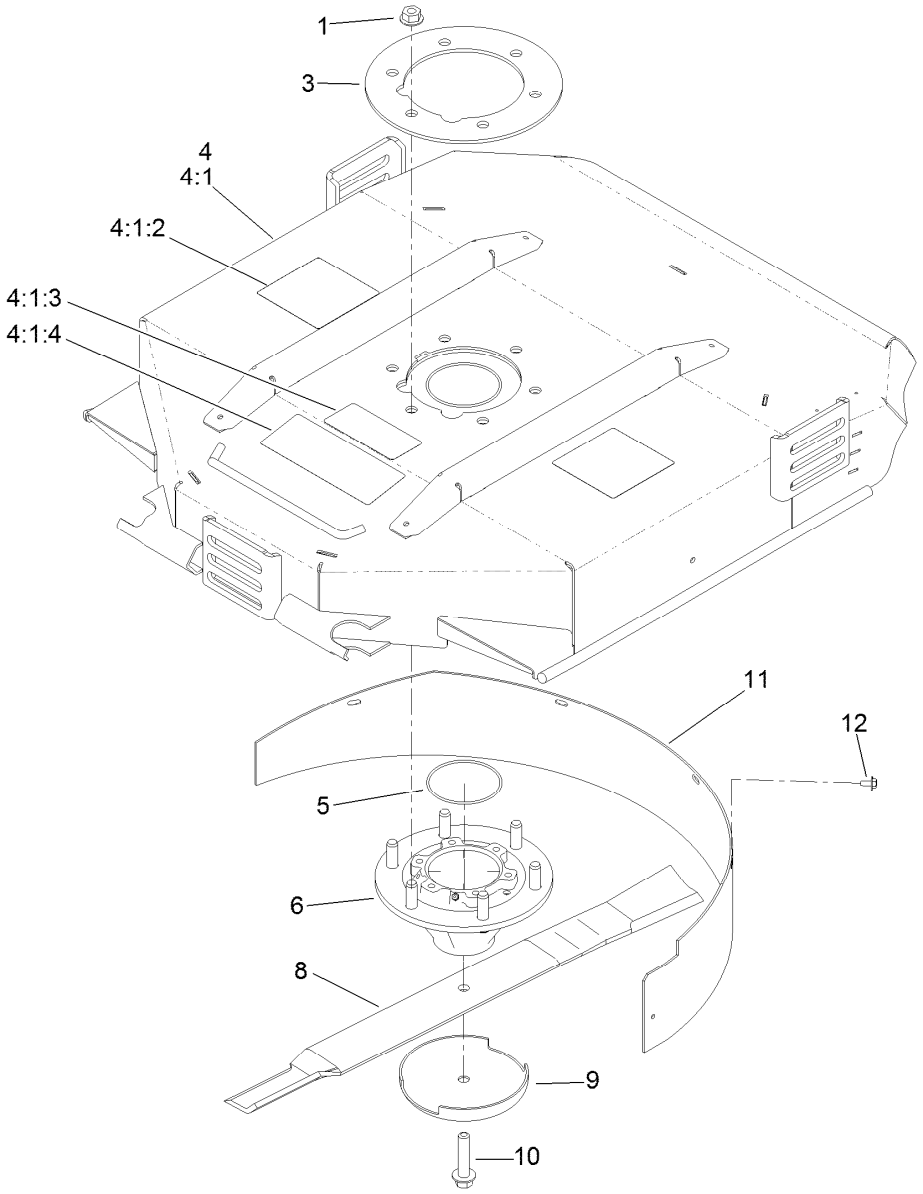

Chamber, Blade and Spindle Assembly

Ref.	*Part Number*	*Qty.*	*Description*
1	32128-39	6	Nut-HF
3	104-1051-03	1	Plate-Spindle
4	127-6389	1	Deck Chamber Service ASM
4:1		1	Chamber ASM ●
4:1:2	117-4764	2	Decal-Danger
4:1:3	93-7818	1	Decal-Torque, Blade Bolt
4:1:4	104-1086	1	Decal-HOC
5	237-161	1	O-Ring
6	115-3435	1	Spindle ASM
8	107-0235-03	1	Blade-Atomic
8	108-9026-03	1	Blade-Combo
9	72-9361	1	Cup-Scalp, Anti
10	92-5816	1	Bolt-Blade
11	108-9025-01	1	Baffle-Mulching
12	46-8560	5	Screw-HHFTF

● Not serviced separately

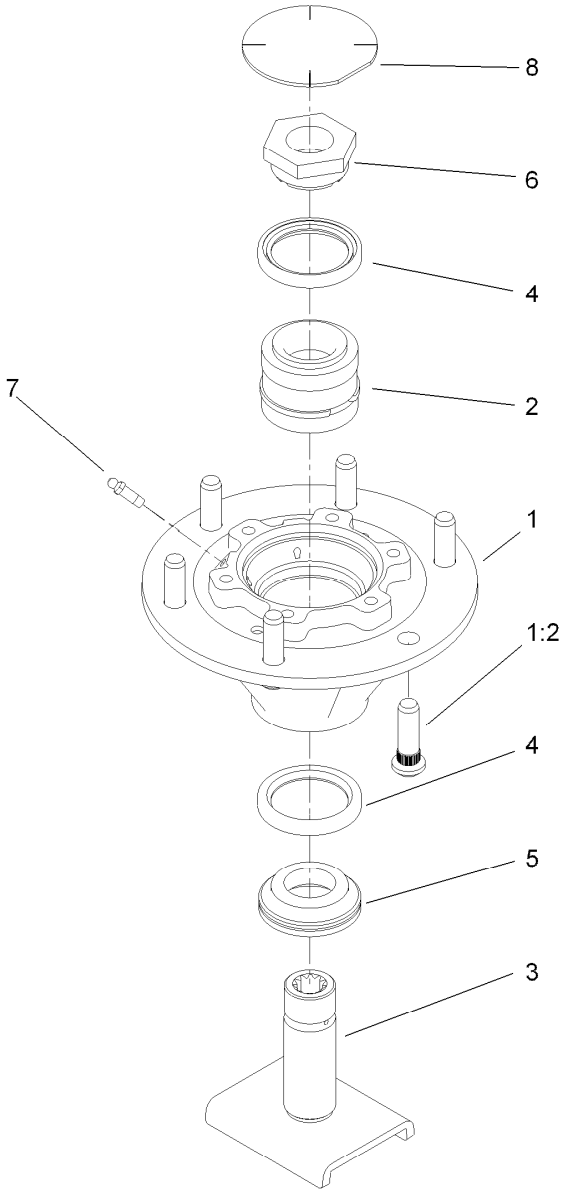

Spindle Assembly No. 115-3435

Ref.	*Part Number*	*Qty.*	*Description*
1	115-3434	1	Spindle
1:2	10-6830	6	Stud-Type, Drive
2	100-5703	1	Spacer And Bearing ASM
3	100-5705	1	Spindle Shaft ASM
4	253-154	2	Seal-Oil
5	69-6950	1	Spacer-Shaft, Spindle
6	100-5709	1	Nut-Spindle, Spcl
7	302-62	2	Fitting-Grease
8	94-2703	1	Plug

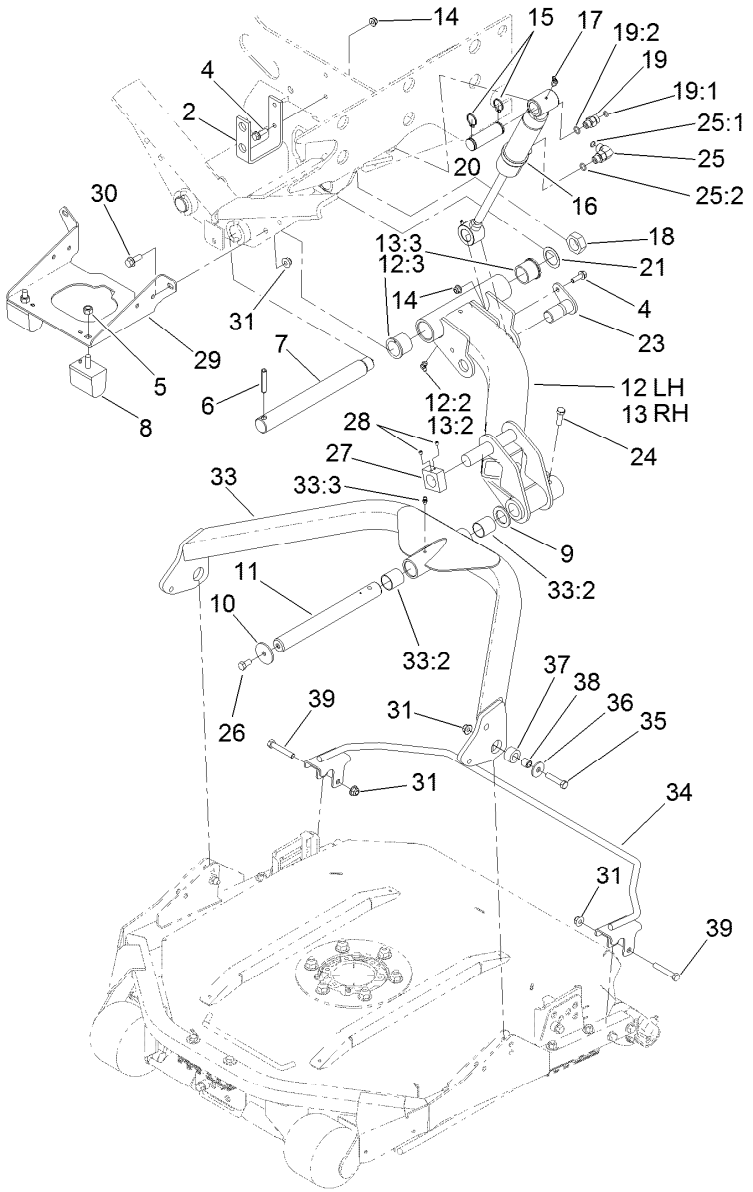

No. 2 and 3 Lift Arm and Deck Assembly

Ref.	Part Number	Qty.	Description
2	105-3992-03	1	Bracket-Bulkhead
4	3234-17	4	Screw-HHF
5	33025-00	2	Nut-Lock, NI
6	32121-110	2	Pin-Roll, Slotted
7	95-7158	2	Pin-Pivot
8	87-3470	2	Bumper
9	3-6781	2	Washer-Flat
10	63-7400	2	Washer-Rebound
11	105-9827	2	Shaft
12	105-9202	1	No. 2 Lift Arm ASM
12:2	302-60	1	Fitting-Grease
12:3	104-0015	2	Bushing-Flange
13	105-9203	1	No. 3 Lift Arm ASM
13:2	302-60	1	Fitting-Grease
13:3	104-0015	2	Bushing-Flange
14	104-8300	4	Nut-HF, NI
15	32151-36	4	Ring-Retaining
16	127-6428	2	Lift Cylinder ASM
17	302-11	2	Fitting-Lube, 45 DEG
18	3296-49	2	Nut-Lock, NI
19	340-2	2	Fitting-Straight

Ref.	Part Number	Qty.	Description
19:1	237-22	1	O-Ring
19:2	237-42	1	O-Ring
20	92-7548	2	Pin-Cylinder
21	76-2980	2	Washer-Thrust
23	104-5525	2	Pin-Cylinder
24	323-7	2	Screw-HH
25	340-77	2	Fitting-Elbow, 90 DEG
25:1	237-22	1	O-Ring
25:2	237-42	1	O-Ring
26	323-4	2	Screw-HH
27	105-9839	2	Stop-Rotation, No. 2 And 3
28	3245-1	4	Screw-Set, HSH
29	119-3941-03	1	Support-Bumper, Rear
30	3234-11	3	Screw-HHF
31	104-8301	11	Nut-HF, NI
33	115-3453	2	Carrier Frame ASM
33:2	108-4000	2	Bushing
33:3	302-5	1	Fitting-Grease
34	112-9900-03	2	Guard-Foot
35	323-52	4	Screw-HH
36	93-8806	4	Washer-Hardened

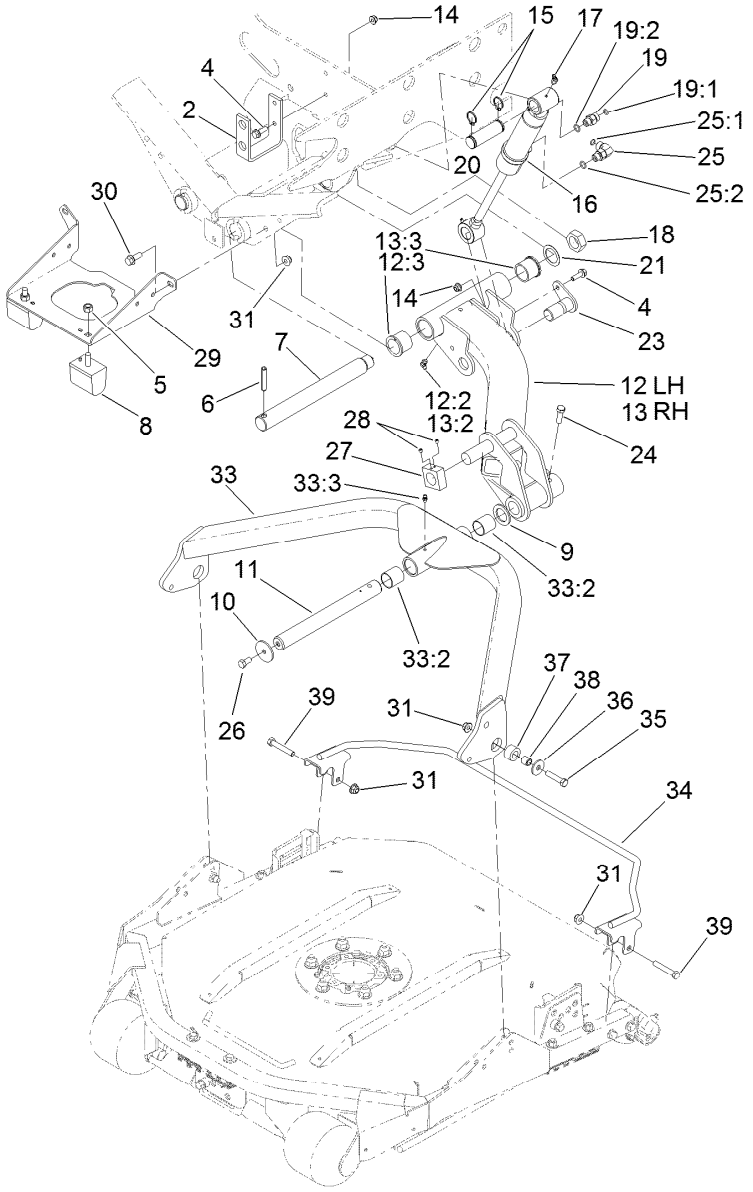

No. 2 and 3 Lift Arm and Deck Assembly (continued)

Ref.	Part Number	Qty.	Description
37	105-9823	4	Bushing-Carrier
38	105-9822	4	Spacer
39	323-11	4	Screw-HH

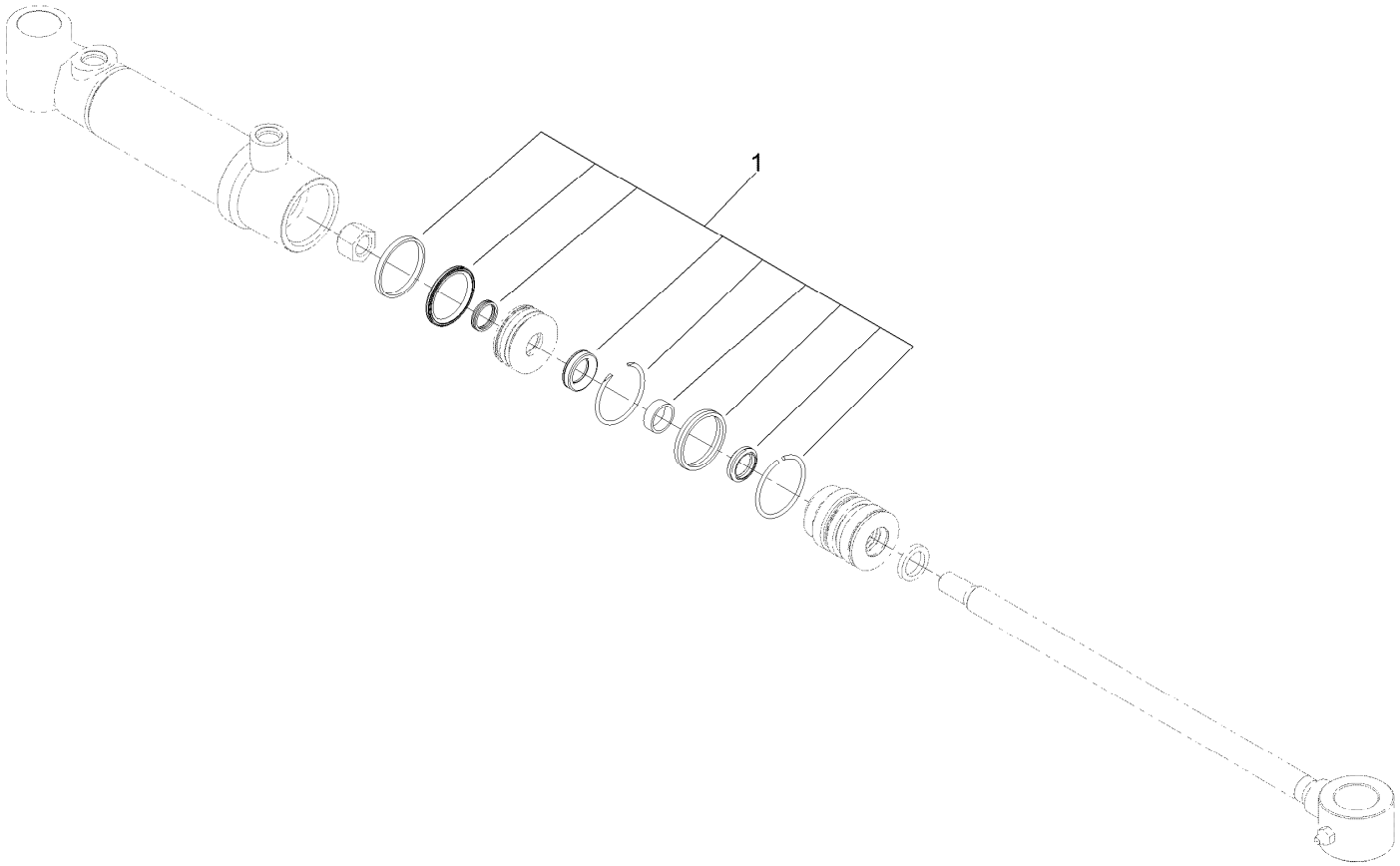

Lift Cylinder Assembly No. 127-6428

Ref.	*Part Number*	*Qty.*	*Description*
1	131-7755	1	Cylinder Seal Kit

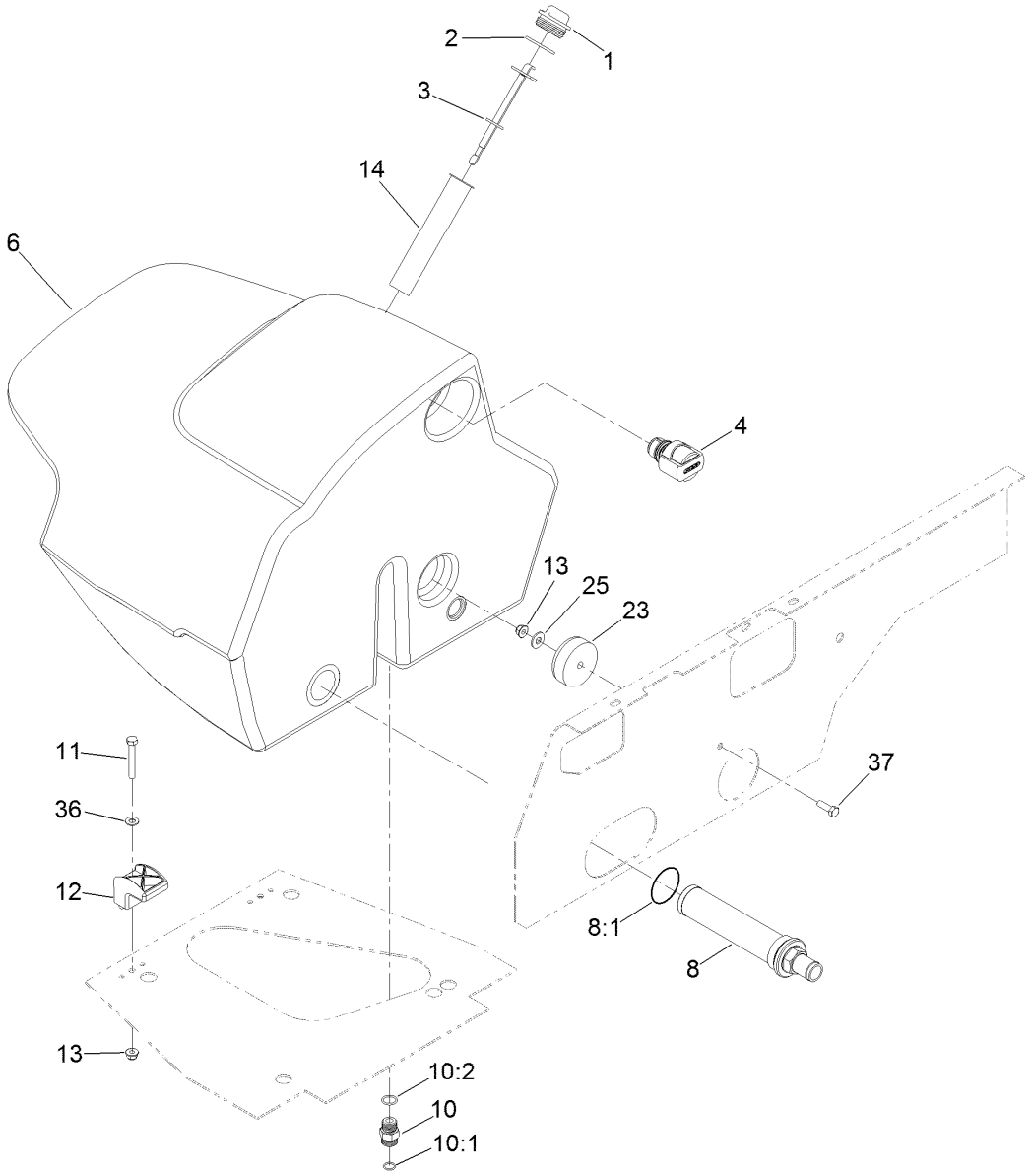

Hydraulic Tank Assembly

Ref.	Part Number	Qty.	Description
1	93-7498	1	Plug-Plastic
2	237-101	1	O-Ring
3	119-6968	1	Dipstick-Oil
4	115-9793	1	Breather
6	119-0017	1	Tank-HYD
8	104-7546	1	Tank Strainer ASM
8:1	340-136	1	O-Ring
10	340-4	1	Fitting-Straight
10:1	237-30	1	O-Ring

Ref.	Part Number	Qty.	Description
10:2	237-79	1	O-Ring
11	322-11	2	Screw-HH
12	107-4543	2	Clamp
13	104-8300	3	Nut-HF, NI
14	61-2790	1	Filter-Screen
23	108-1605	1	Bumper-Recess
25	3256-3	1	Washer-Flat
36	3256-23	2	Washer-Plain
37	322-5	1	Screw-HH

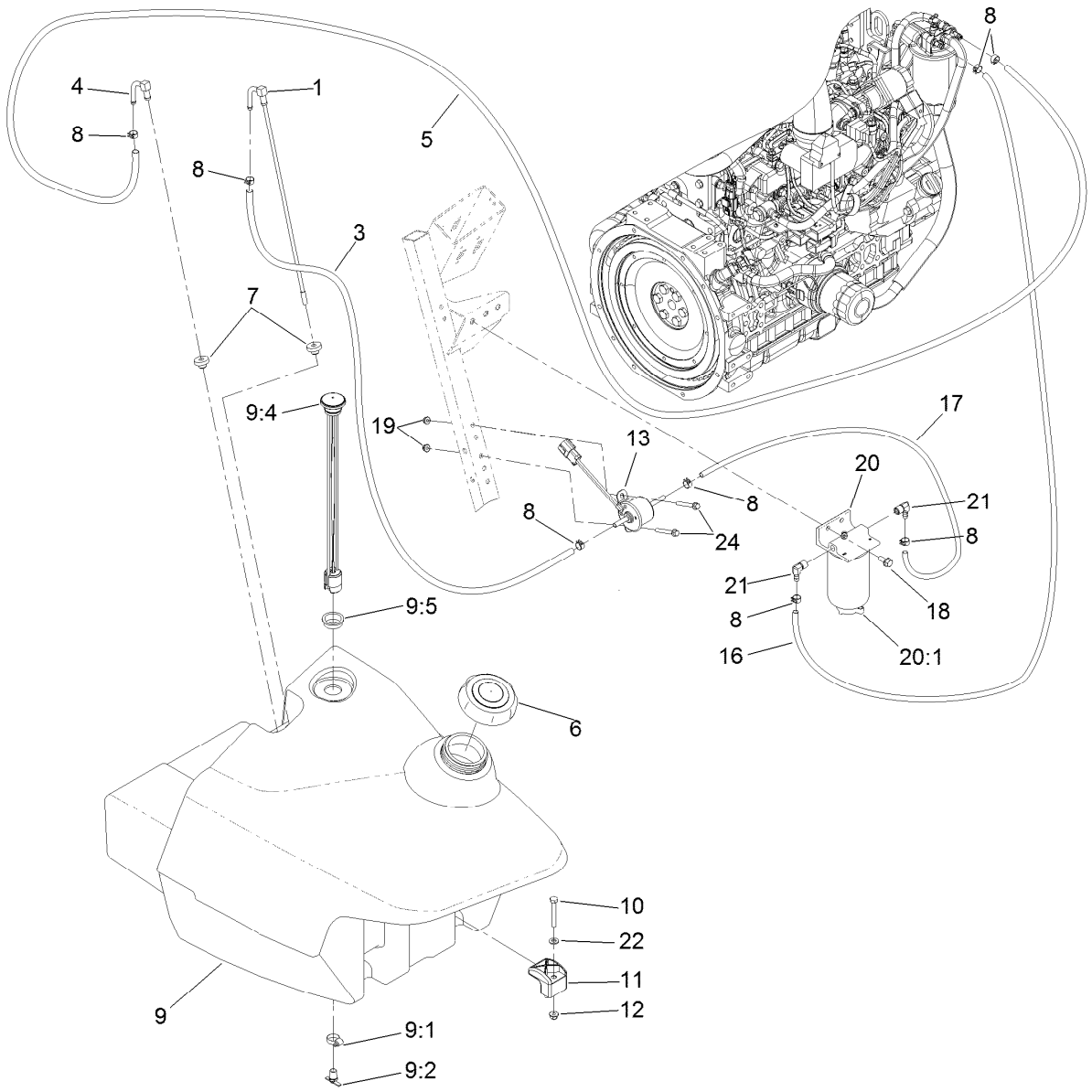

Fuel System Assembly

Ref.	Part Number	Qty.	Description
1	115-4354	1	Tube-Suction, Fuel
3	110-8802	1	Hose-Fuel
4	121-3127	1	Fitting-Return
5	119-0577	1	Hose-Fuel
6	125-9172	1	Cap-Fuel, Diesel, Ultra Low Sulfur
7	46-6560	2	Bushing
8	92-2379	8	Clamp-Hose
9	115-4353	1	Fuel Tank ASM
9:1	2412-36	1	Clamp-Hose
9:2	304-46	1	Draincock
9:4	117-4790	1	Guage-Fuel
9:5	95-8972	1	Grommet

Ref.	Part Number	Qty.	Description
10	322-11	2	Screw-HH
11	107-4543	2	Clamp
12	104-8300	2	Nut-HF, NI
13	121-5613	1	Pump-Fuel, Electric
16	109-0308	1	Hose-Fuel
17	110-4113	1	Hose-Fuel
18	3234-5	2	Screw-HHF
19	104-7201	2	Nut-HF, NI
20	125-2914	1	Filter-Separator
20:1	125-2915	1	Filter-Fuel/Water Separator
21	353-781	2	Fitting-HYD, 90
22	3256-23	2	Washer-Plain
24	3234-34	2	Screw-HHF

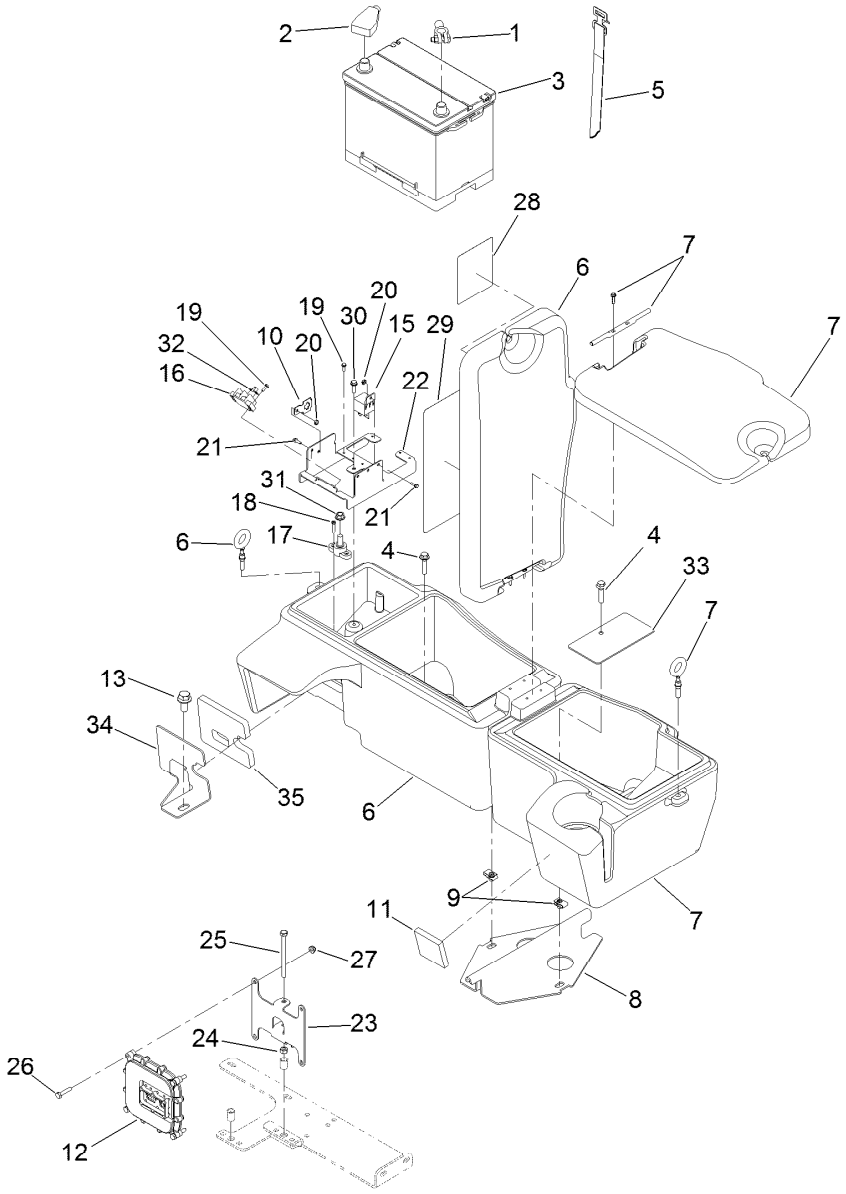

Electrical Assembly

Ref.	Part Number	Qty.	Description
1	117-2377	1	Cable-Battery, Negative
2	121-6589	1	Cable-Battery, Positive
3	106-5190	1	Battery, 660 CCA W/O Electrolyte
4	115-1794	2	Screw-HHF
5	3339-175	1	Strapping-Web
6	115-9100	1	Box-Storage, Battery
7	115-9101	1	Box-Storage
8	115-4387-03	1	Support-Box, Storage
9	112-3306	2	Nut
10	114-5502	1	Clip-Fuse
11	117-4783	2	Seal-Foam
12	114-3321	1	Controller-Tec
13	3234-6	1	Screw-HHF
15	99-7435	2	Relay
16	42862	1	Block-Terminal, Ground
17	110-8822	1	Block-Junction
18	93-0231	2	Screw-PPH

Ref.	Part Number	Qty.	Description
19	32144-87	6	Screw-HWHTF
20	3296-54	4	Nut-Lock
21	112-3169	4	Screw-HHF, Serrated
22	115-4356-03	1	Mount-Fuse Block
23	117-2360-03	1	Bracket-Mount, Controller
24	3217-6	1	Nut-Hex
25	322-19	1	Screw-HH
26	321-8	4	Screw-HH
27	104-7201	4	Nut-HF, NI
28	125-4605	1	Decal-Fuse
29	125-4606	1	Decal-Service
30	46-8091	1	Screw-HWH
31	3290-357	1	Nut-HSF
32	42863	1	Strip-Jumper
33	117-4768-03	1	Plate-Box, Storage
34	117-4774-03	1	Clamp
35	117-4775	1	Seal-Battery Box

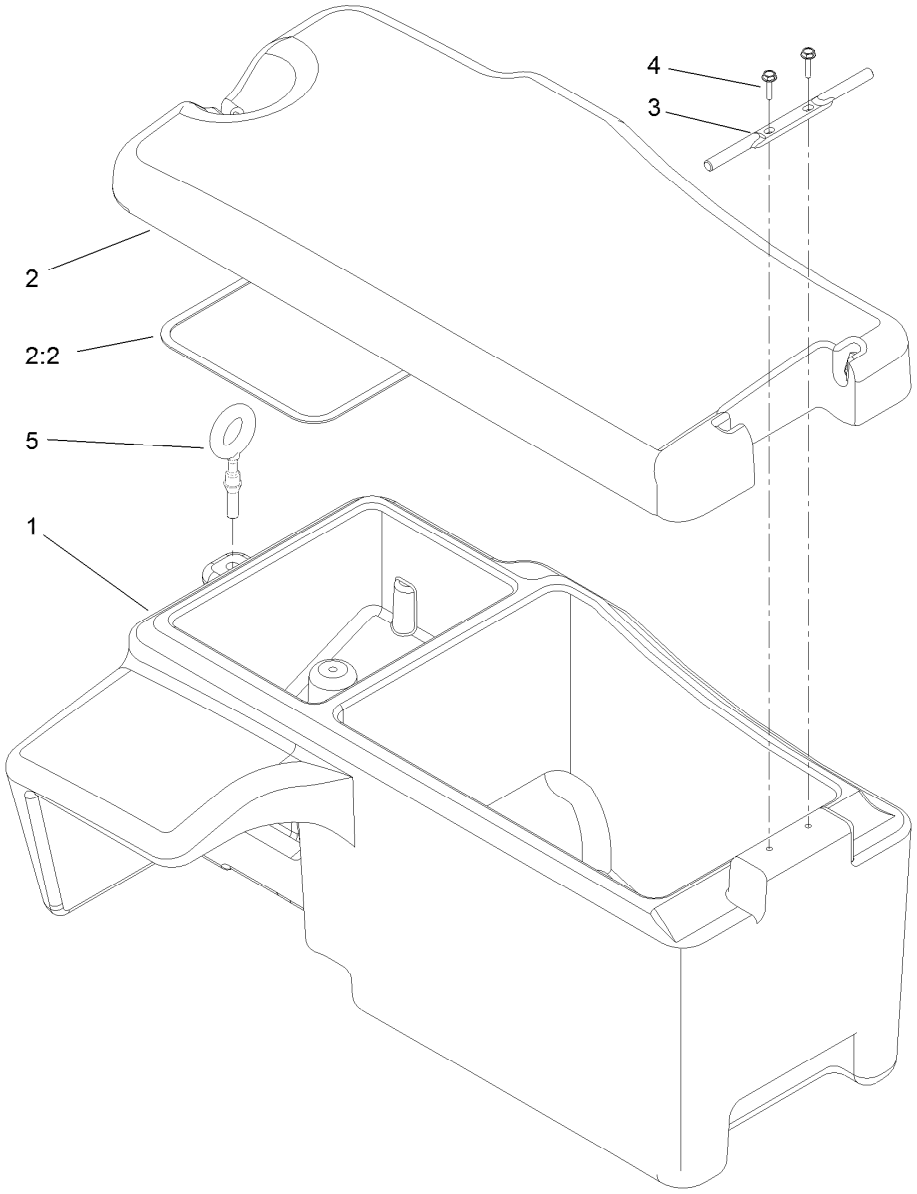

Battery Storage Box Assembly No. 115-9100

Ref.	*Part Number*	*Qty.*	*Description*
1	114-8124	1	Box-Storage, RH
2	115-4368	1	Cover ASM
2:2	115-4367	1	Seal-Cover
3	114-8132	1	Hinge-Cover
4	98-1375	2	Screw-HWH
5	115-4366	1	Latch-Rubber

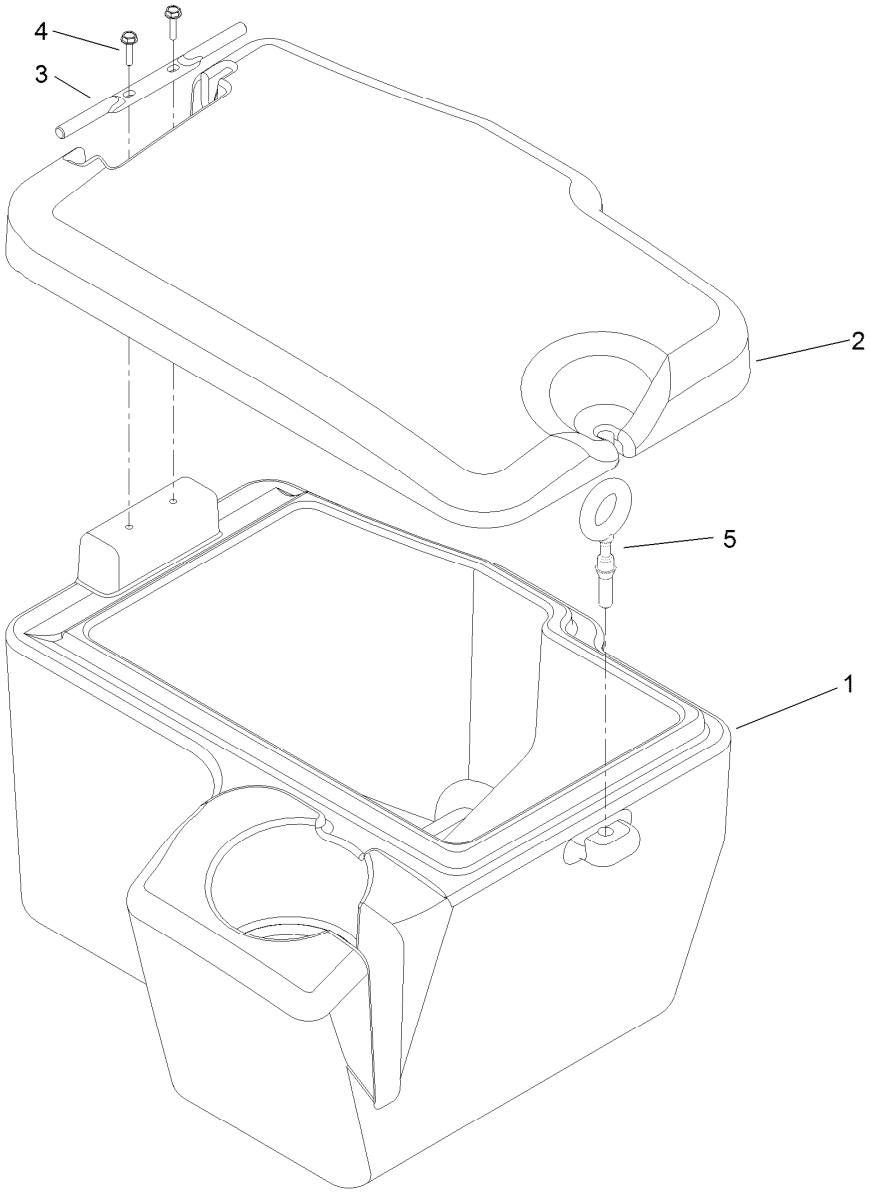

Storage Box Assembly No. 115-9101

Ref.	*Part Number*	*Qty.*	*Description*
1	114-8123	1	Box-Storage, LH
2	114-8125	1	Cover-Storage Box, LH
3	114-8132	1	Hinge-Cover
4	98-1375	2	Screw-HWH
5	115-4366	1	Latch-Rubber

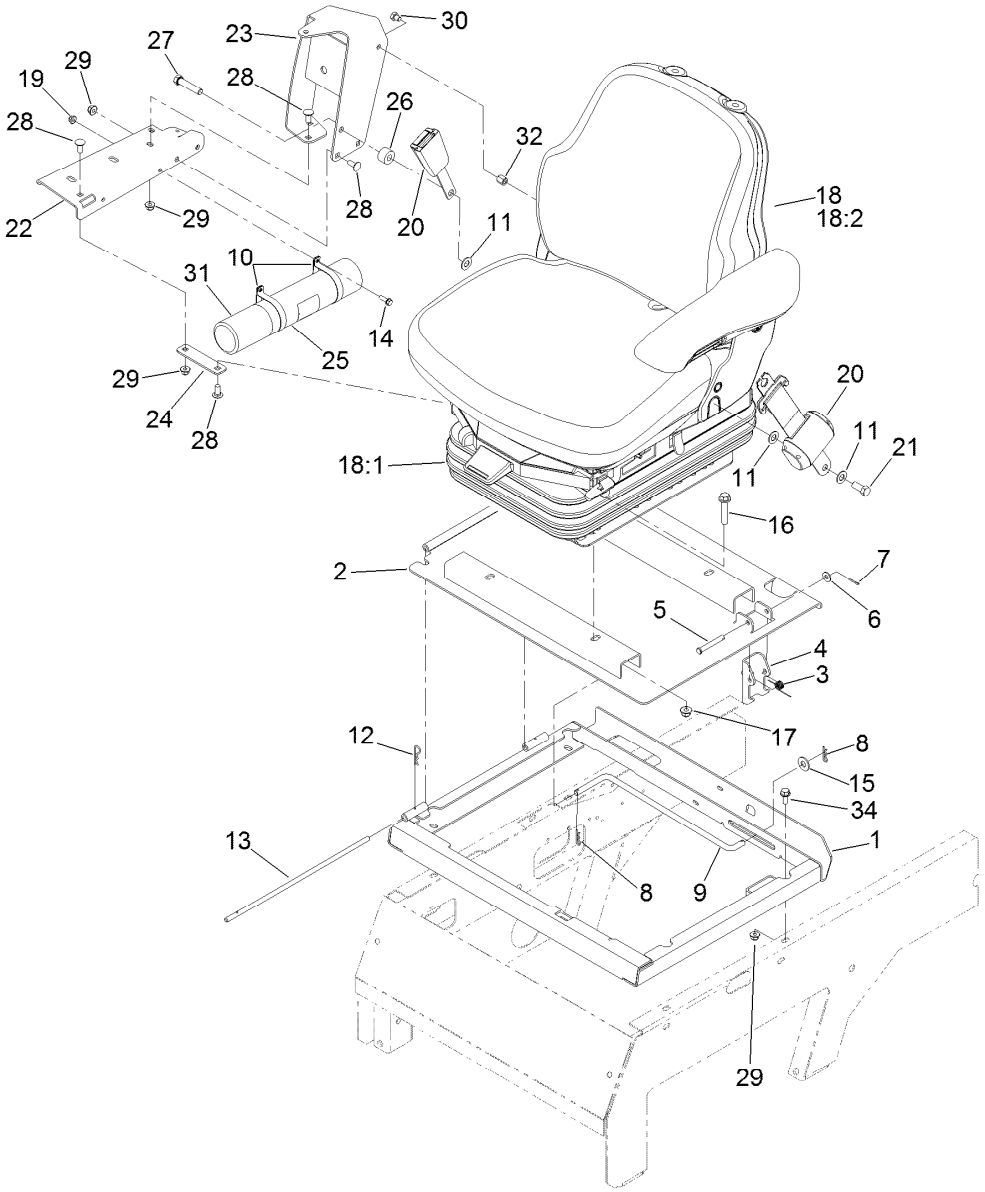

Seat Mounting Assembly

Ref.	Part Number	Qty.	Description
1	115-4400-03	1	Frame-Seat
2	115-4411-03	1	Plate-Seat
3	104-4821	1	Spring-Torsion
4	115-4423-03	1	Latch-Seat Plate
5	110-0618	1	Pin-Clevis
6	3256-2	1	Washer-Flat
7	3272-6	1	Pin-Cotter
8	3290-307	4	Pin-Cotter
9	117-4797-03	2	Rod-Seat Frame
10	107-1865	2	R-Clamp
11	3256-25	3	Washer-Flat
12	3290-467	1	Pin-Hair
13	75-3400	1	Shaft-Pivot, Seat
14	32105-15	2	Screw-HWH
15	3256-4	2	Washer-Flat
16	66-9302	4	Screw-HHF Lock
17	104-8301	4	Nut-HF, NI
18		1	Seat And Suspension ASM ●

Ref.	Part Number	Qty.	Description
18:1	108-1488	1	Seat Suspension ASM
18:2	117-5676	1	Premium Seat ASM
19	104-7201	2	Nut-HF, NI
20	110-0413	1	Seatbelt-Retractable
21	3212-4	1	Screw-HH
22	119-0000-03	1	Channel-Support
23	117-4798-03	1	Arm-Support
24	112-7449-03	1	Bracket-Support
25	104-7050	1	Tube-Manual
26	17-7190	1	Spacer-Finger
27	3212-8	1	Screw-HH
28	3230-23	6	Bolt-CARR
29	104-8300	9	Nut-HF, NI
30	108-8646	1	Screw-HH, Lock
31	104-7048	1	Cap-Housing
32	112-7405	1	Nut-Hex, Coupling
34	3234-47	4	Screw-HHF

● Not serviced separately

Air Ride Seat Suspension Assembly No. 108-1488

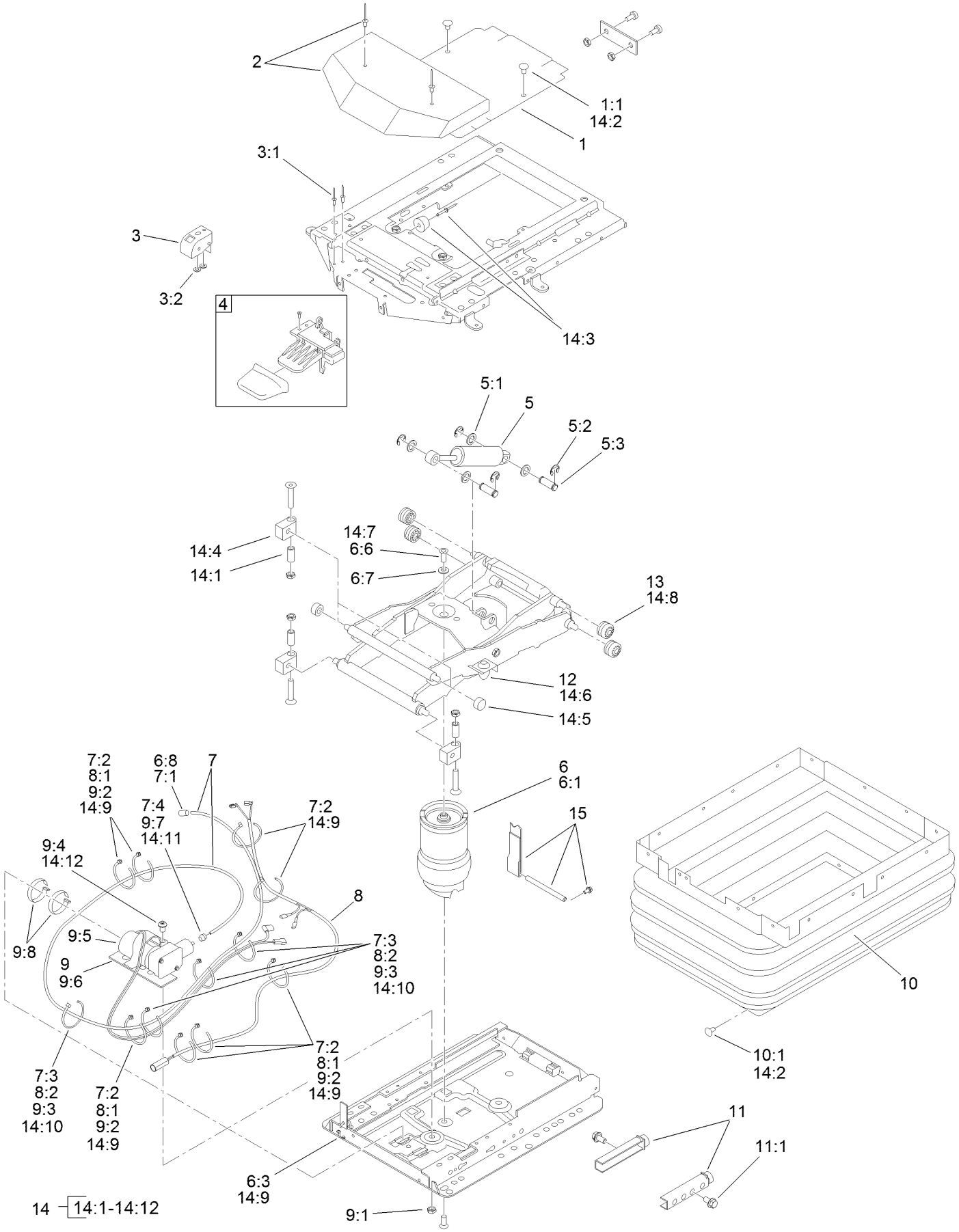

Air Ride Seat Suspension Assembly No. 108-1488 (continued)

Ref.	Part Number	Qty.	Description
1	108-8026	1	Cover ASM
1:1	39-5710	2	Plug-Plastic
2	108-8027	1	Cover
3	108-8028	1	Level Indicator Kit
3:1		2	Rivet ■
3:2		2	Washer ■
4	108-8029	1	Valve-Control, Air
5	108-8030	1	Shock Absorber Kit
5:1		4	Washer ■
5:2		4	C-Clip ■
5:3		2	Pin ■
6	108-8031	1	Air Spring Kit
6:1		1	Air Spring ■
6:3		2	Cable Tie ■
6:6		2	Screw ■
6:7		1	Washer ■
6:8		1	Nipple-Hose ■
7	108-8032	1	Air Tube ASM
7:1		1	Nipple-Hose ■
7:2		7	Tie-Wire ■
7:3		4	Tie-Wire ■
7:4		1	Nipple-Hose ■
8	108-8033	1	Connecting Cable ASM
8:1		8	Tie-Wire ■
8:2		4	Tie-Wire ■
9	108-8034	1	Compressor Kit
9:1		1	Nut ■
9:2		5	Tie-Wire ■
9:3		4	Tie-Wire ■
9:4		1	Screw ■
9:5		1	Compressor ■
9:6		1	Plate-Mounting ■
9:7		1	Nipple-Hose ■
9:8		2	Clamp ■
10	108-8035	1	Bellows ASM
10:1	39-5710	23	Plug-Plastic
11	108-8036	1	Stop Kit
11:1		2	Screw ■
12	107-1213	2	Bumper Set
13	108-8037	4	Roller
14	108-8038	1	Wear Parts Kit ●
14:1		4	Spacer ■
14:2	39-5710	2	Plug-Plastic
14:3		1	Bumper ■
14:4		4	Support-Housing ■
14:5		2	Roller ■
14:6	107-1213	2	Bumper Set
14:7		2	Screw ■
14:8	108-8037	4	Roller
14:9		9	Tie-Wire ■
14:10		4	Tie-Wire ■
14:11		1	Nipple-Hose ■
14:12		1	Screw ■
15	119-2161	1	Tether Kit

● Not illustrated

■ Not serviced separately

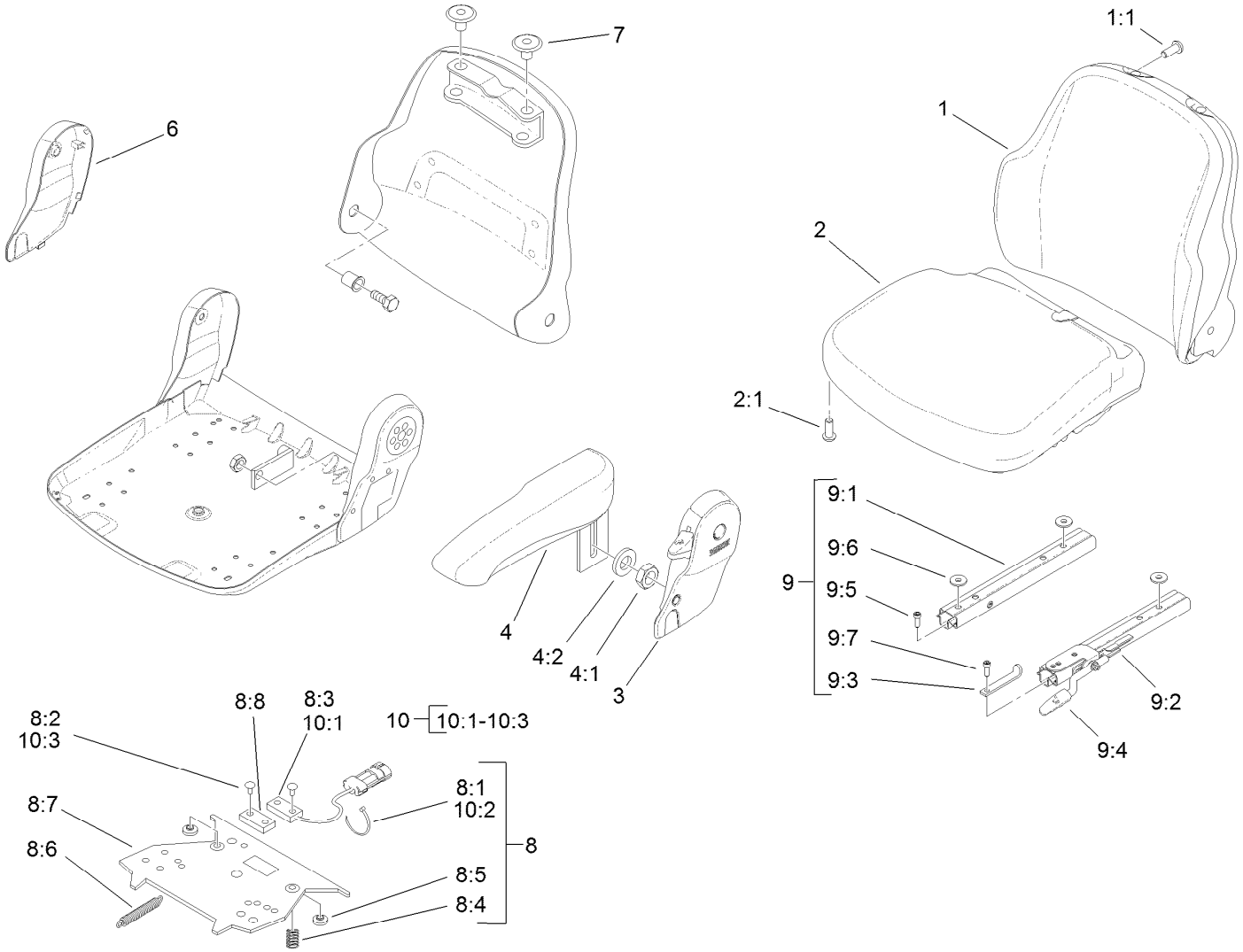

Vinyl Premium Seat Assembly No. 117-5676

Ref.	Part Number	Qty.	Description
1	108-8016	1	Backrest Cushion ASM
1:1	119-7742	4	Screw-Cushion
2	108-8017	1	Seat Cushion ASM
2:1	119-7742	3	Screw-Cushion
3	108-8018	1	Cover-Armrest
4	108-8019	1	LH Armrest ASM
4:1	82-9650	1	Nut
4:2	107-1198	1	Washer
6	108-8021	1	Cover-Armrest
7	108-8022	2	Cover-Black
8	108-8024	1	Switch Kit
8:1		3	Wire Tie ●
8:2		4	Rivet ●
8:3		1	Sensor-Seat Switch ●
8:4		2	Spring-Compression ●
8:5		2	Bumper-Pressure Plate ●

Ref.	Part Number	Qty.	Description
8:6		1	Spring-Extension ●
8:7		1	Plate-Mounting ●
8:8		1	Magnet ●
9	108-8025	1	Adjustment Rail Set
9:1		1	Rail-Adjustment, RH ●
9:2		1	Rail-Adjustment, LH ●
9:3		1	Stop-Rail ●
9:4		1	Handle ●
9:5		3	Screw ●
9:6		3	Washer ●
9:7		1	Screw ●
10	110-6189	1	Switch Kit
10:1		1	Switch ●
10:2		3	Wire Tie ●
10:3		2	Rivet ●

● Not serviced separately

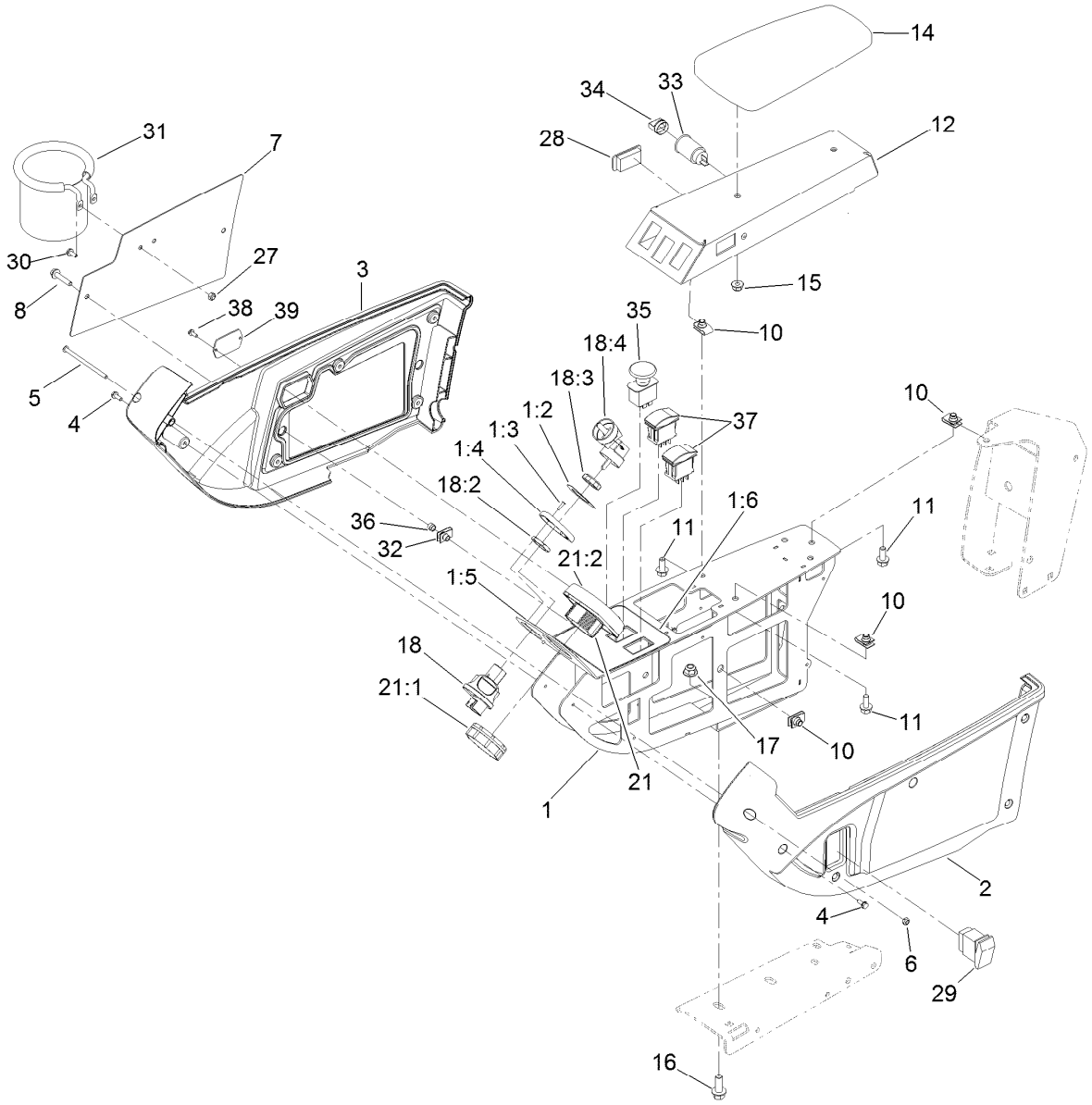

Console Assembly

Ref.	Part Number	Qty.	Description
1	120-4155	1	Panel ASM
1:2	121-3884	1	Decal-Console, Upper
1:3	3269-17	2	Rivet-Pop
1:4	121-3889	1	Step-Elevated, Switch
1:5	121-3887	1	Decal-Console, Display
1:6	120-4159	1	Decal-Console, Lower
2	108-7604	1	Cover-LH
3	108-7605	1	Cover-RH
4	32144-112	10	Screw-HWH
5	3250-22	1	Screw-PPH
6	3296-12	1	Nut-Lock, NI
7	115-8849-03	1	Plate-Cover
8	3234-21	2	Screw-HHF
10	94-2413	5	Nut-U
11	3234-5	5	Screw-HHF
12	125-4646-03	1	Panel-Control
14	108-7602	1	Rest-Arm
15	104-8300	2	Nut-HF, NI
16	3234-42	2	Screw-HHF
17	104-8301	2	Nut-HF, NI
18	121-5159	1	Switch-Ignition

Ref.	Part Number	Qty.	Description
18:2	121-5160	1	Nut-Hex
18:3	121-5161	1	Nut-Face
18:4	121-5162	1	Set-Key, Ignition
21	120-6310	1	LCD Display ASM Kantrak 1700
21:1	120-4630	1	Nut-Display
21:2	120-6311	1	Decal-Display
27	3296-2	2	Nut-Lock, NI
28	99-7420	1	Plug-Hole
29	95-8999	1	Switch-Rocker, On-None-On
30	3290-321	2	Screw-HWH
31	117-2378	1	Holder-Bag
32	107069	2	Clip
33	99-7411	1	Point-Power
34	99-7416	1	Cap
35	93-9999	1	Switch-PTO
36	110-0542	2	Spacer-Flange
37	100-1535	2	Switch-Rocker, (On)-Off-(On)

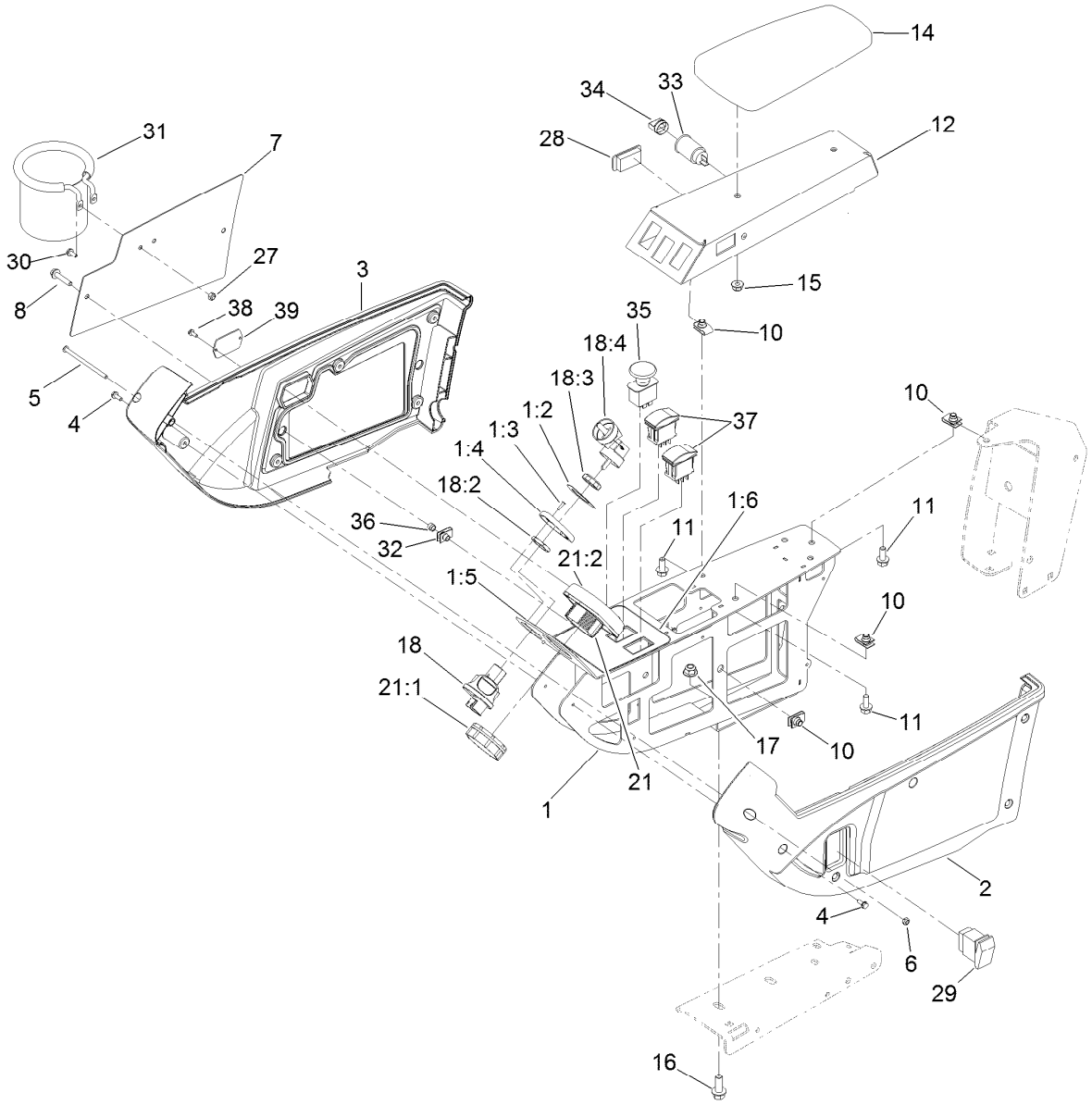

Console Assembly (continued)

Ref.	*Part Number*	*Qty.*	*Description*
38	32144-18	2	Screw-HWH
39	121-1630	1	Plate-Cover

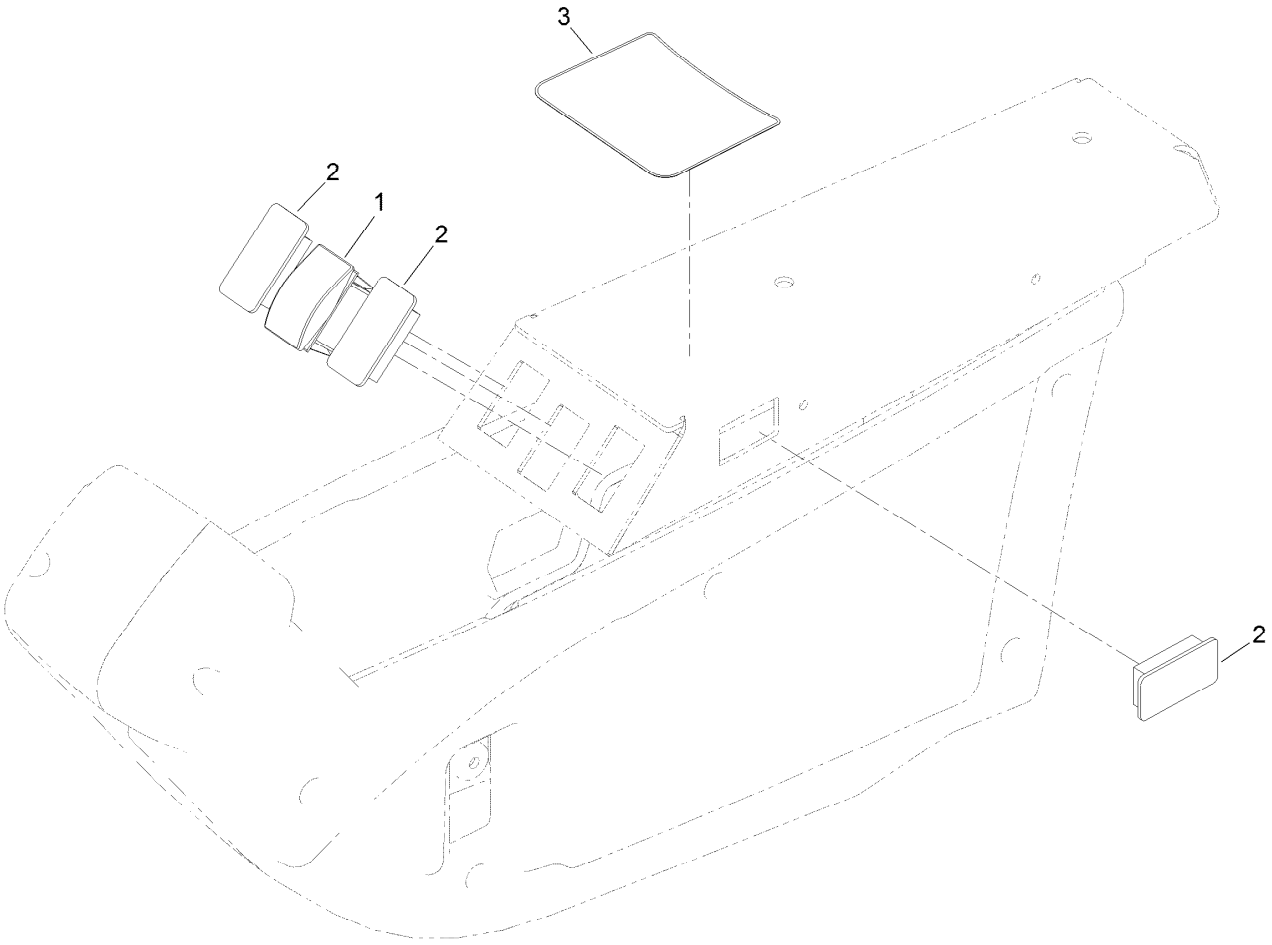

Console Switch, Cover and Decal Assembly

Ref.	*Part Number*	*Qty.*	*Description*
1	100-1535	1	Switch-Rocker, (On)-Off-(On)
2	99-7420	3	Plug-Hole
3	125-4603	1	Decal-Lift

Steering and Brake Assembly

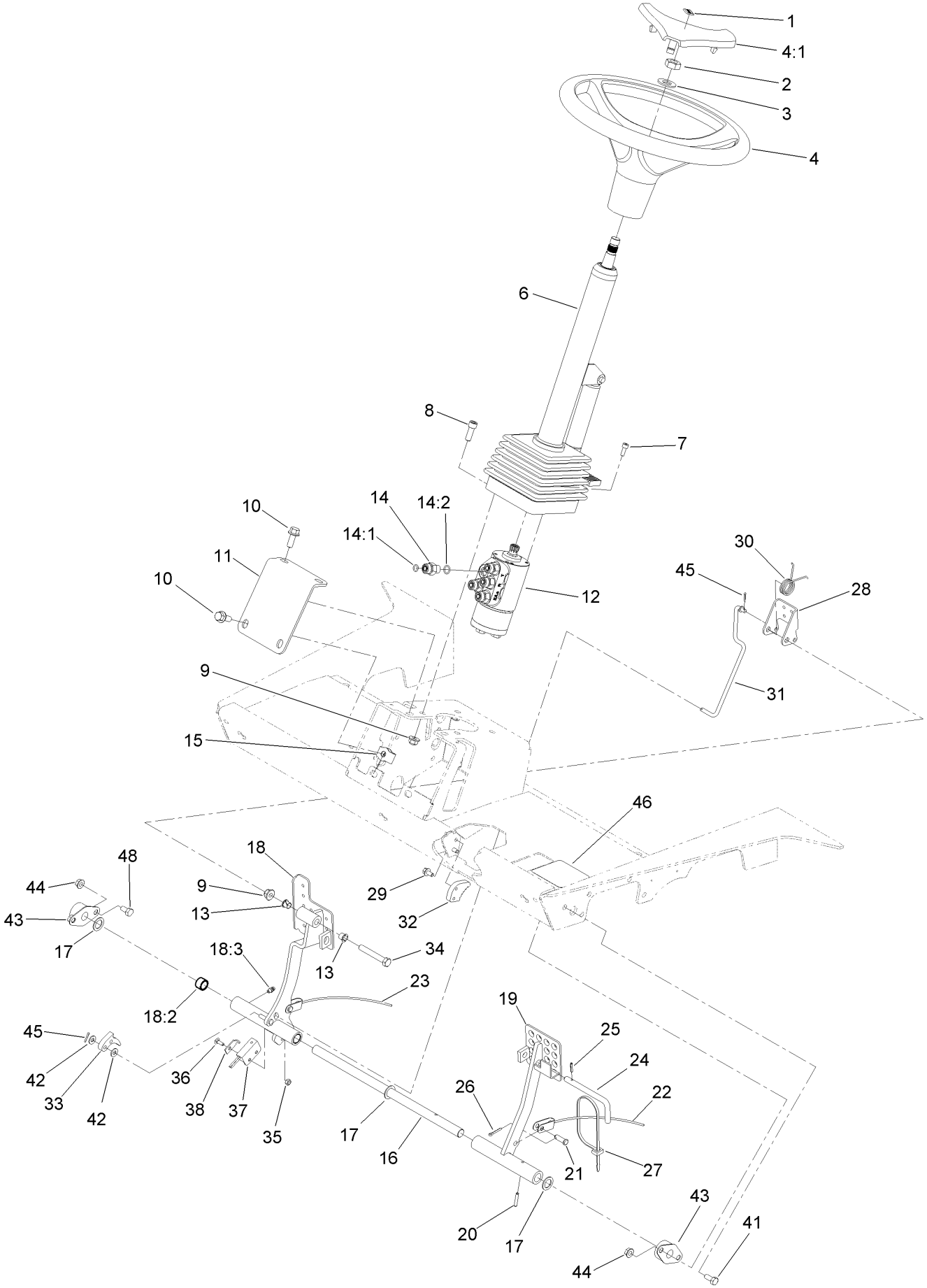

Steering and Brake Assembly (continued)

Ref.	Part Number	Qty.	Description
1	98-1459	1	Decal
2	3296-33	1	Nut-Lock, NI
3	3256-27	1	Washer-Flat
4	98-1471	1	Wheel-Steering
4:1	98-1468	1	Cover-Wheel, Steering
6	106-3622	1	Steering Tilt Column ASM
7	105-2409	4	Screw-HSH
8	3274-7	4	Screw-HSH
9	104-8301	5	Nut-HF, NI
10	3234-11	4	Screw-HHF
11	115-4379-01	1	Brace-Column
12	114-8119	1	Steering Valve ASM
13	52-2891	2	Bushing-Flanged, Nylon
14	340-2	5	Fitting-Straight
14:1	237-22	1	O-Ring
14:2	237-42	1	O-Ring
15	105-4886	4	Nut-Tinnerman
16	75-1470	1	Pin-Pivot, Brake
17	3256-69	3	Washer-Flat
18	119-0005	1	RH Brake Pedal ASM
18:2	256-42	2	Bushing
18:3	302-5	1	Fitting-Grease
19	115-4421-03	1	Pedal-Brake, LH
20	32121-16	1	Pin-Spring
21	283-58	2	Pin-Clevis
22	92-7530	1	Cable-Brake, LH
23	92-7529	1	Cable-Brake, RH
24	63-7880	1	Pin-Latch, Brake
25	32121-50	1	Pin-Spring
26	3272-10	2	Pin-Cotter
27	3290-378	1	Tie-Cable
28	99-7963-03	1	Pedal-Park
29	3234-13	2	Screw-HHF
30	99-7140	1	Spring-Torsion
31	115-4417	1	Rod-Brake Pawl
32	119-0002	1	Pawl-Brake
33	120-1691	1	Detent-Brake
34	323-12	1	Screw-HH
35	3296-2	1	Nut-Lock, NI
36	3229-34	1	Screw-CARR
37	100-1270	1	Switch-Proximity
38	100-4872	1	Plate-Switch, Neutral
41	322-3	1	Screw-HH
42	3256-22	3	Washer-Flat
43	256-236	2	Bearing-Mount, Flange
44	32128-20	3	Nut-HF
45	3272-5	3	Pin-Cotter
46	117-4763	1	Decal-Brake
48	322-2	2	Screw-HH

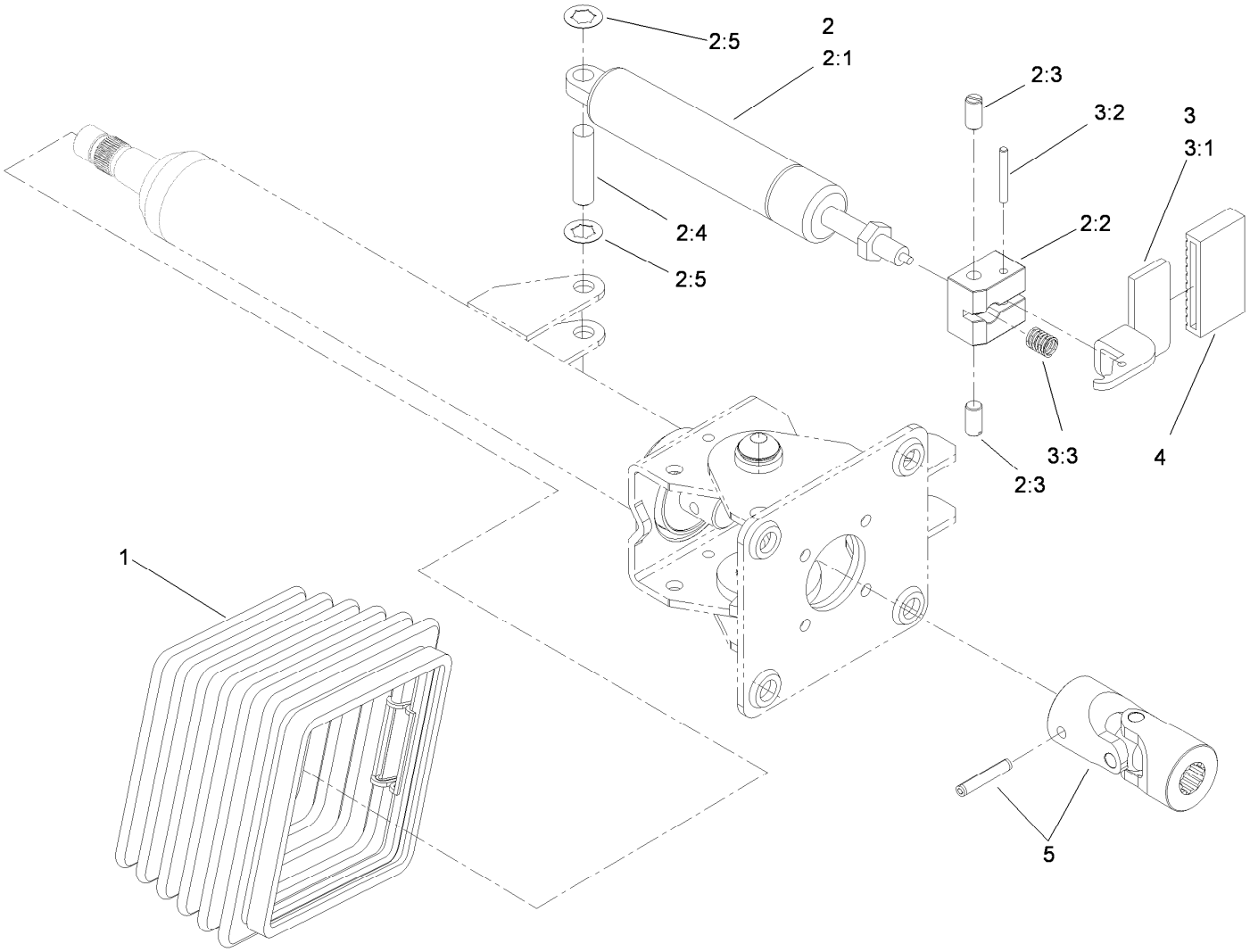

Steering Tilt Column Assembly No. 106-3622

Ref.	*Part Number*	*Qty.*	*Description*
1	110-6462	1	Bellows-Rubber
2	110-6463	1	Cylinder Service Kit
2:1		1	Cylinder-Gas ●
2:2		1	Block-Pedal ●
2:3		2	Bolt ●
2:4		1	Pin ●
2:5		2	Washer-Lock ●
3	110-6464	1	Pedal Service Kit
3:1		1	Pedal ●
3:2		1	Pin ●
3:3		1	Spring ●
4	110-6465	1	Cover-Pedal
5	120-6256	1	Universal Joint Kit

● Not serviced separately

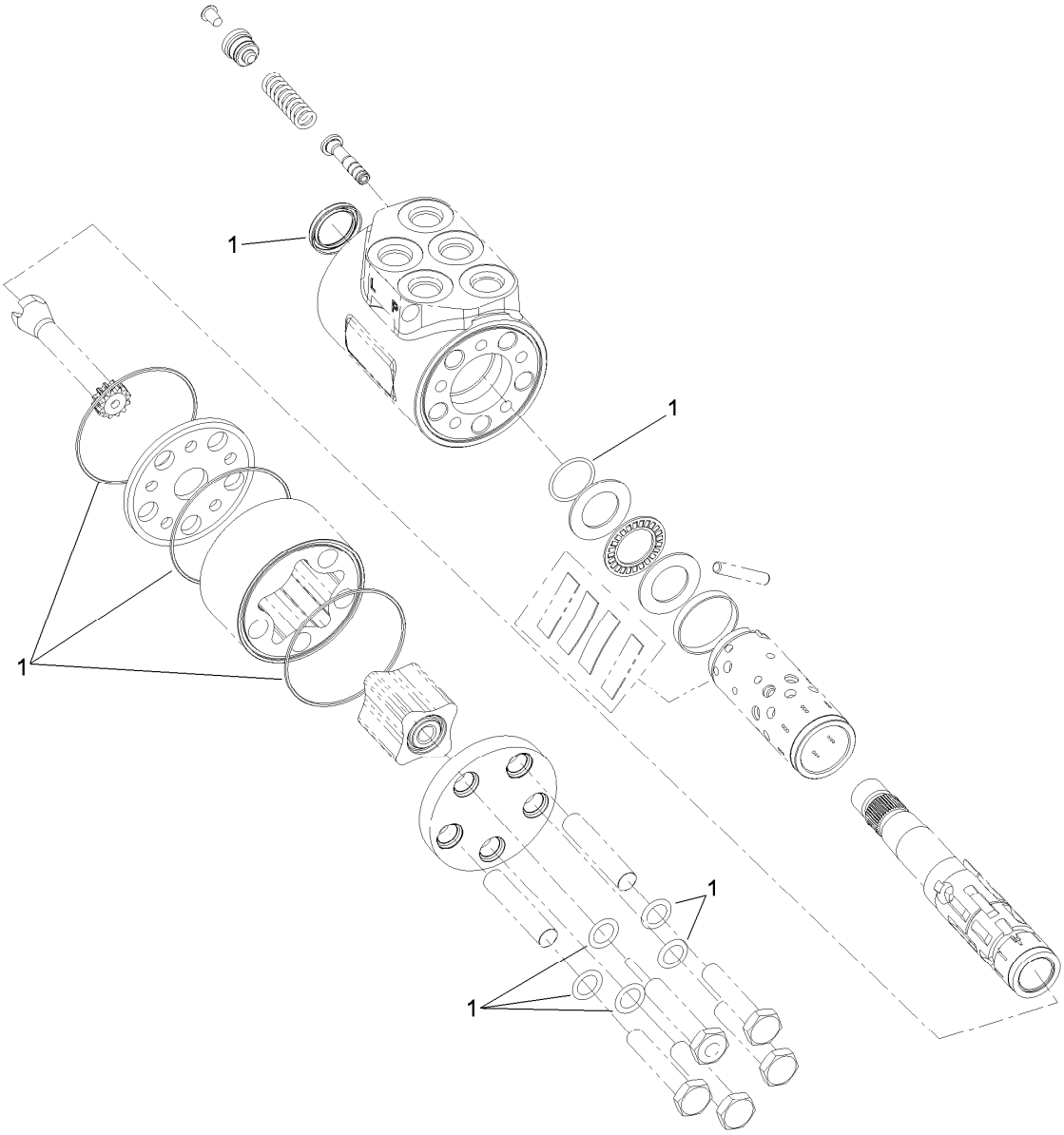

Steering Valve Assembly No. 114-8119

Ref.	*Part Number*	*Qty.*	*Description*
1	106-6716	1	Seal Kit

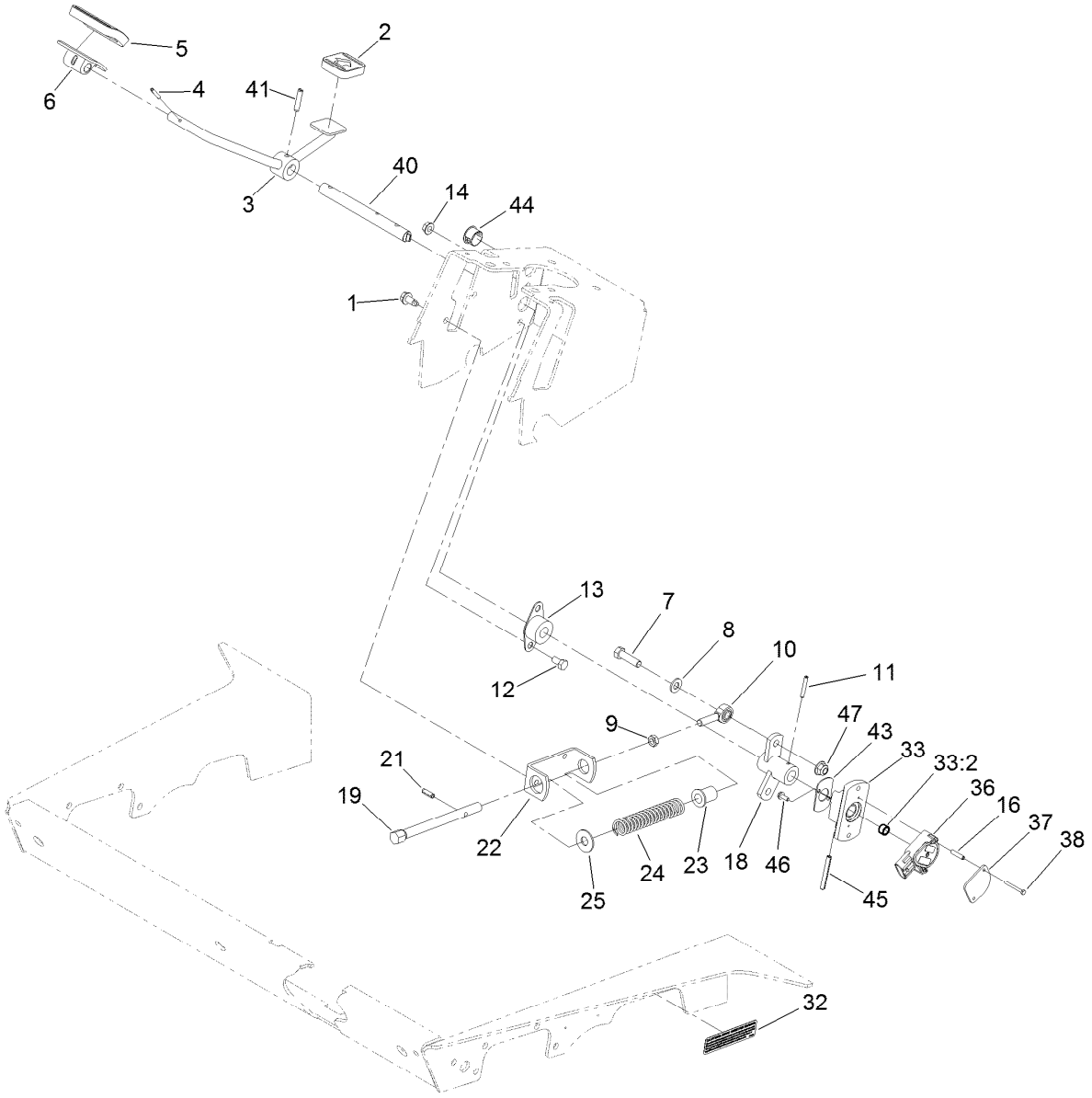

Pedal Assembly

Ref.	Part Number	Qty.	Description
1	32104-32	2	Screw-HWH
2	74-9110	1	Pad-Pedal, Reverse
3	120-8095	1	Pedal
4	32121-45	1	Pin-Spring
5	74-9100	1	Pad-Pedal, Forward
6	117-9507	1	Pedal-Accelerator
7	323-29	1	Screw-HH
8	3256-24	1	Washer-Plain
9	3220-3	1	Nut-HJ
10	2411-36	1	Bearing-End, Rod
11	32121-6	1	Pin-Roll, Slotted
12	322-2	4	Screw-HH
13	256-236	1	Bearing-Mount, Flange
14	32128-20	2	Nut-HF
16	114-5608	2	Spacer-Standoff
18	120-8088-03	1	Hub-Traction Pedal Pivot
19	115-4383	1	Shaft-Spring
21	32121-11	1	Pin-Roll

Ref.	Part Number	Qty.	Description
22	92-7608-03	1	Bracket-Spring
23	92-7610	1	Retainer-Spring
24	84-9100	1	Spring
25	3256-5	1	Washer-Flat
32	117-2718	1	Decal-Arrester, Spark
33	120-8038	1	Hub ASM
33:2	95-7497	1	Bushing-Wheel
36	114-5609	1	Sensor-Position
37	114-5595	1	Plate-Capture
38	32105-21	2	Screw-HH
40	120-8091	1	Shaft-Pivot, Traction
41	32121-69	1	Pin-Roll
43	120-8089	1	Plate-Cover, Sensor
44	121-3099	1	Plug-Panel, Plastic
45	32121-78	1	Pin-Roll
46	3290-321	2	Screw-HWH
47	104-8301	1	Nut-HF, NI

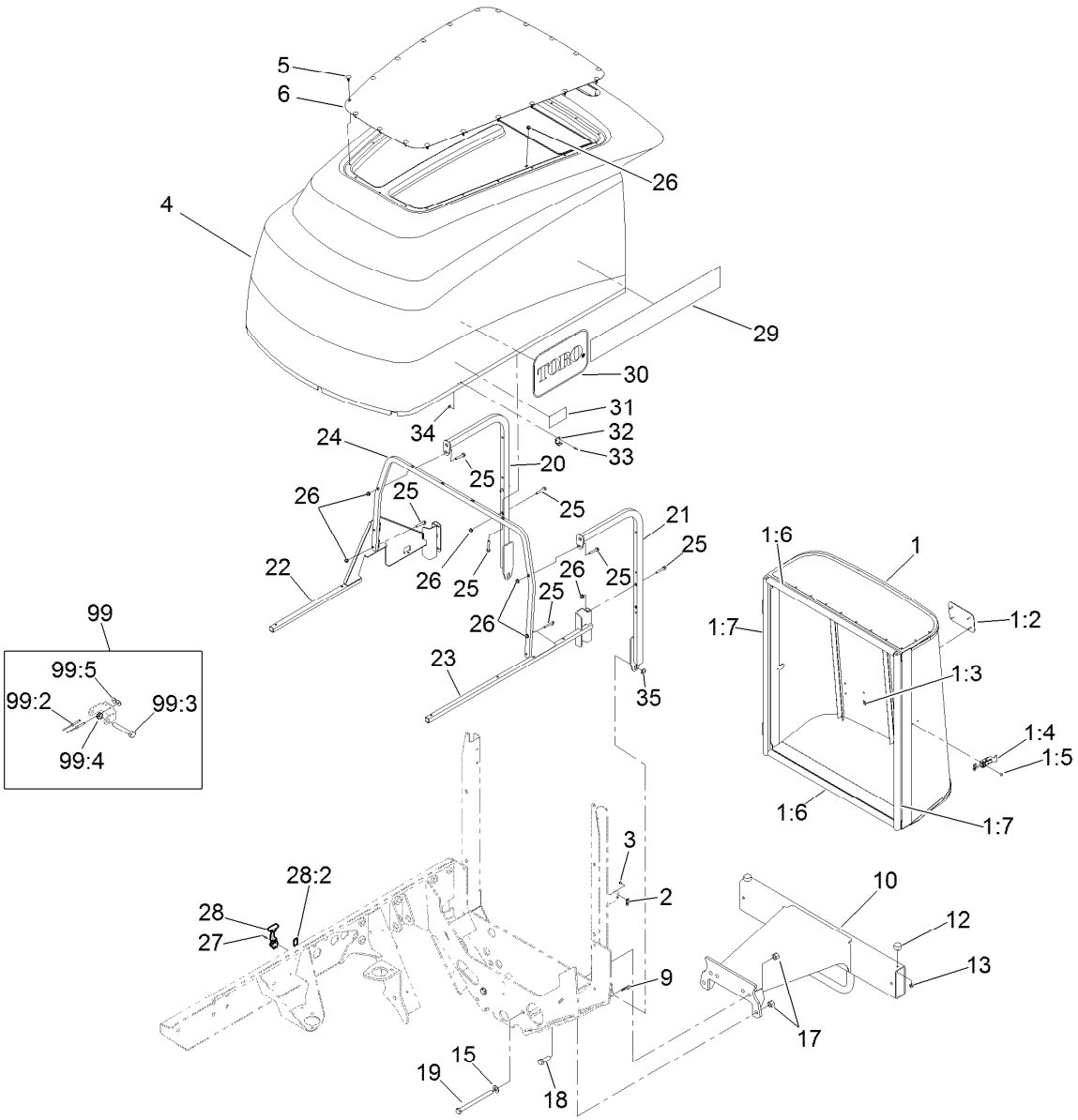

Hood Assembly

Ref.	Part Number	Qty.	Description
1	115-4362	1	Screen ASM
1:2	93-6028	1	Plate-Logo
1:3	94-2638	4	Nut-Flat
1:4	114-8117	1	Latch-Adjustable
1:5	3269-3	2	Rivet-Pop
1:6	115-4358	2	Seal-Bulb
1:7	115-4359	2	Seal-Bulb
2	115-4357	1	Latch-Keeper
3	3269-3	2	Rivet-Pop
4	125-4576	1	Hood ASM
5	117-2382	20	Plug-Plastic
6	114-4192-03	1	Screen-Hood
9	3290-467	2	Pin-Hair
10	120-8020-03	1	Bumper-Rear
12	240-14	2	Bumper-Rubber
13	32128-33	2	Nut-HF
15	3256-26	2	Washer-Flat
17	3296-23	4	Nut-Lock, NI
18	325-6	2	Screw-HH
19	325-33	2	Screw-HH
20	114-8108-03	1	Tube-RH

Ref.	Part Number	Qty.	Description
21	114-8109-03	1	Tube-LH
22	121-3136-03	1	Tube-RH
23	114-8102-03	1	Tube
24	121-3133-03	1	Tube-Frame, Hood
25	94-5781	25	Screw-HHF
26	104-7201	26	Nut-HF, NI
27	3290-55	4	Rivet-Pop
28	59-9740	2	Flex Draw Latch ASM
28:2	249-40	1	Keeper
29	105-9877	2	Decal
30	66-1210	2	Decal
31	106-6754	2	Decal-Danger
32	249-40	2	Keeper
33	3269-17	4	Rivet-Pop
34	3269-10	4	Washer-Back
35	98-1629	2	Washer
99	119-2004	1	CE Latch Kit
99:2	107-0333	2	Rivet-Pop
99:3	322-10	1	Screw-HH
99:4	3296-47	1	Nut-Lock,NI
99:5	3269-10	2	Washer-Back

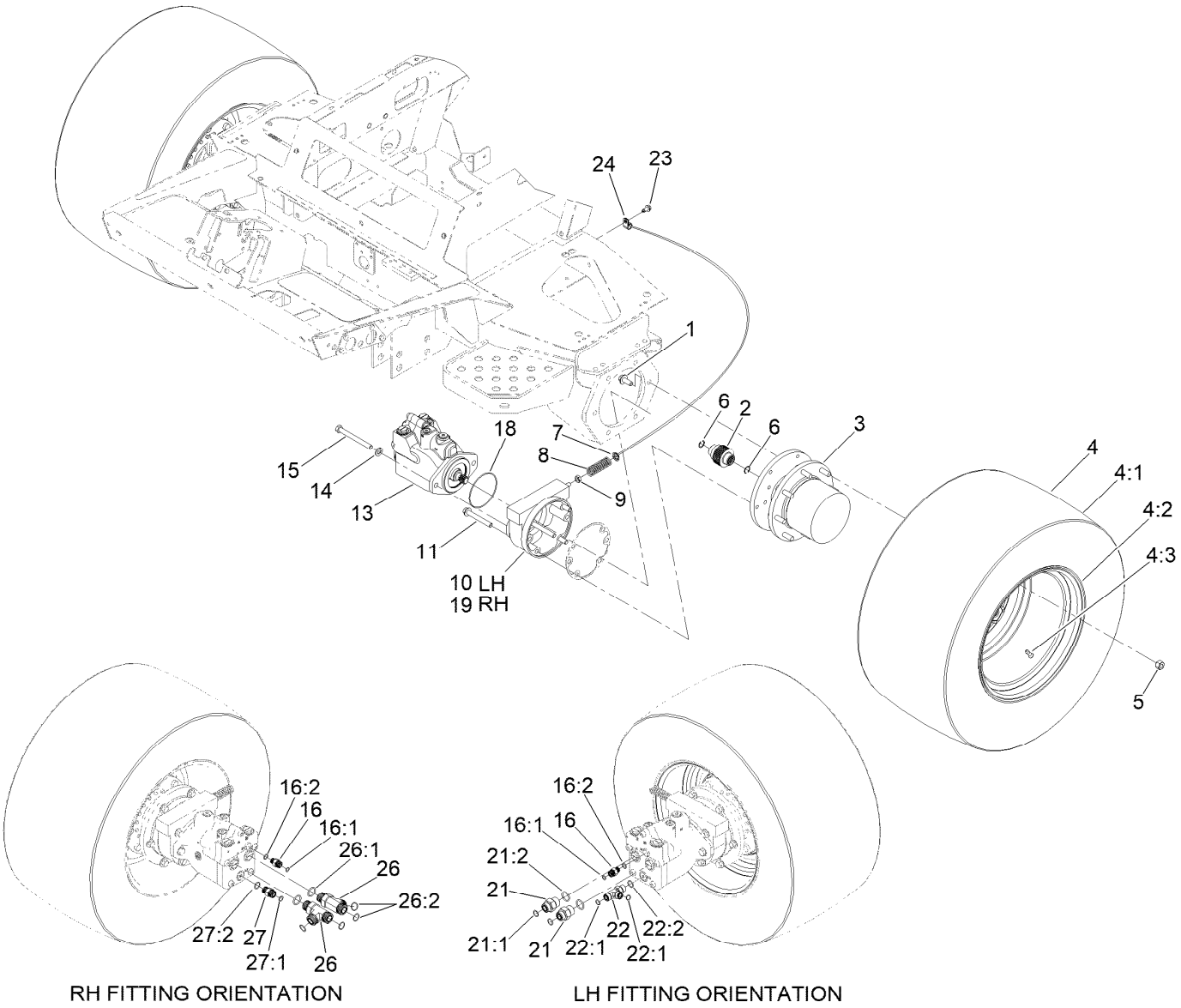

RH FITTING ORIENTATION

LH FITTING ORIENTATION

Front Wheel Drive Assembly

Ref.	Part Number	Qty.	Description
1	33106-030	12	Screw-HHF
2	100-3046	2	Shaft-Brake, Splined
3	105-4500-03	2	Planetary ASM
4		2	Tire And Wheel ASM ●
4:1	119-0023	1	Tire
4:2	119-0024	1	Wheel
4:3	232-24	1	Stem-Valve
5	92-7483	16	Nut-Lug
6	93-7972	4	Ring-Retaining, Internal
7	94-3050	2	Plate-Spring
8	94-3088	2	Spring-Compression
9	3218-4	2	Nut-Jam
10	100-3070-03	1	Brake ASM
11	33106-090	8	Screw-HHF
13	121-3100	2	HYD Piston Motor ASM
14	106-9888	4	Washer-Flat
15	33116-120	4	Screw-HH
16	340-2	2	Fitting-Straight

Ref.	Part Number	Qty.	Description
16:1	237-22	1	O-Ring
16:2	237-42	1	O-Ring
18	237-166	2	O-Ring
19	100-3069-03	1	Brake ASM
21	340-8	2	Fitting-Straight
21:1	237-65	1	O-Ring
21:2	237-81	1	O-Ring
22	340-109	1	Fitting-Tee
22:1	237-79	1	O-Ring
22:2	237-30	2	O-Ring
23	32104-32	2	Screw-HWH
24	2412-93	2	Clamp-R
26	340-148	2	Fitting-Tee
26:1	237-81	1	O-Ring
26:2	237-58	2	O-Ring
27	340-4	1	Fitting-Straight
27:1	237-30	1	O-Ring
27:2	237-79	1	O-Ring

● Not serviced separately

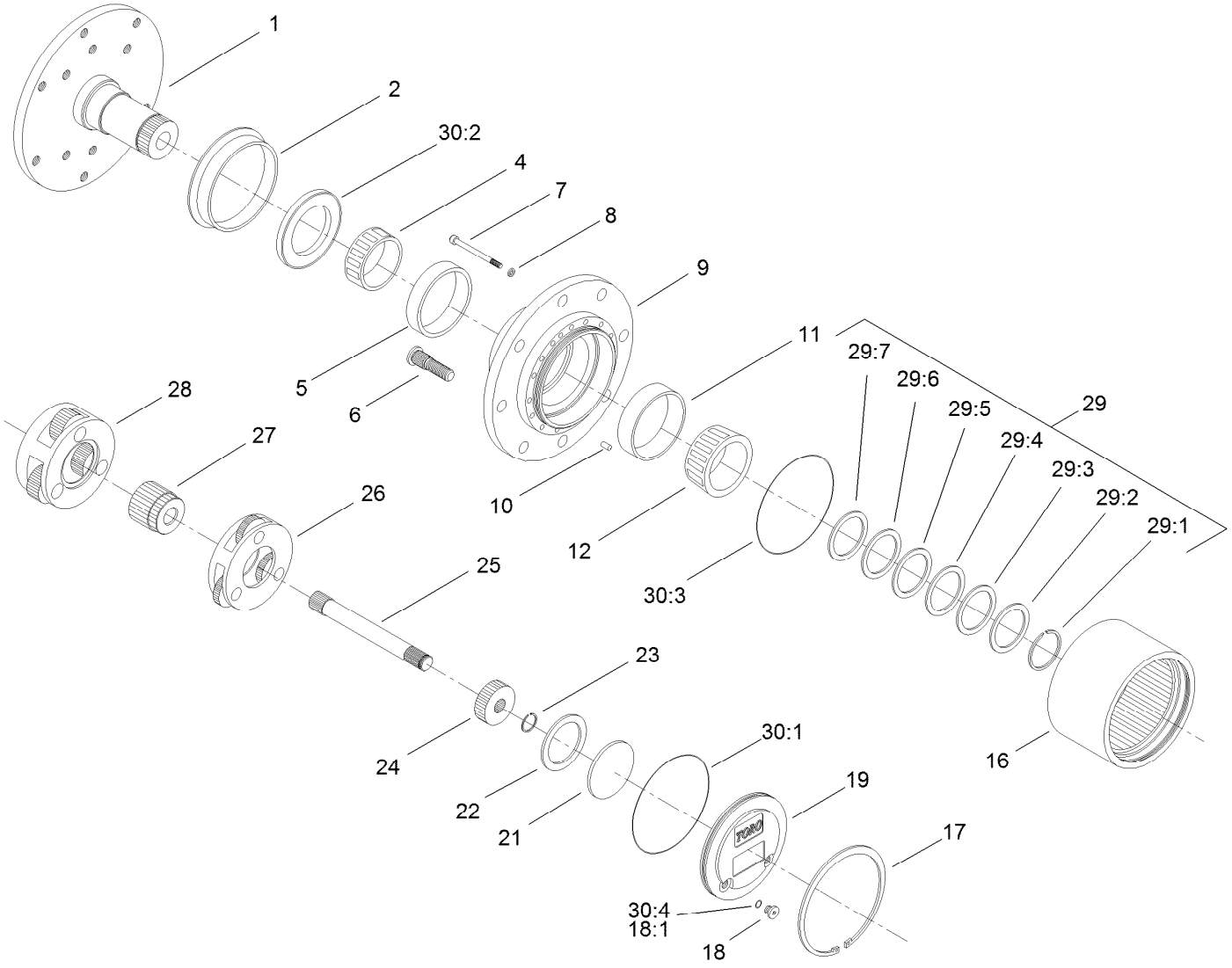

Planetary Assembly No. 105-4500-03

Ref.	Part Number	Qty.	Description
1		1	Spindle ■
2	105-8122	1	Seal-Boot
4	105-8120	1	Bearing-Cone
5	105-8119	1	Bearing-Cup
6	105-8124	8	Stud-Wheel
7	105-8125	16	Bolt-Head, Socket
8	3253-18	16	Washer-Lock
9		1	Housing ■
10	105-8121	1	Pin-Dowel
11	105-8117	1	Bearing-Cup
12	105-8118	1	Bearing-Cone
16	105-8113	1	Gear-Ring
17	105-8132	1	Ring-Retaining
18	353-990	2	Plug ASM
18:1	237-78	1	O-Ring
19	105-8138	1	Cap-End
21	105-8133	1	Plug-Thrust
22	105-8123	1	Washer-Thrust
23	105-8131	1	Ring-Retaining
24	105-8114	1	Gear-Primary
25	105-8115	1	Shaft-Drive
26	105-8129	1	Carrier-Primary
27	105-8139	1	Gear-Secondary
28	105-8130	1	Carrier-Secondary
29	105-8136	1	Shim Kit
29:1		1	Ring-Snap ■
29:2		1	Shim-Bearing, 2.9Mm ■
29:3		1	Shim-Bearing, 2.8Mm ■
29:4		1	Shim-Bearing, 2.7Mm ■
29:5		1	Shim-Bearing, 2.6Mm ■
29:6		1	Shim-Bearing, 2.5Mm ■
29:7		1	Shim-Bearing, 2.4Mm ■
30	105-8137	1	Seal Kit ●
30:1		1	O Ring-Flange Cap ■
30:2		1	Seal-Oil ■
30:3		2	O Ring-End Cap ■
30:4	237-78	2	O-Ring

● Not illustrated

■ Not serviced separately

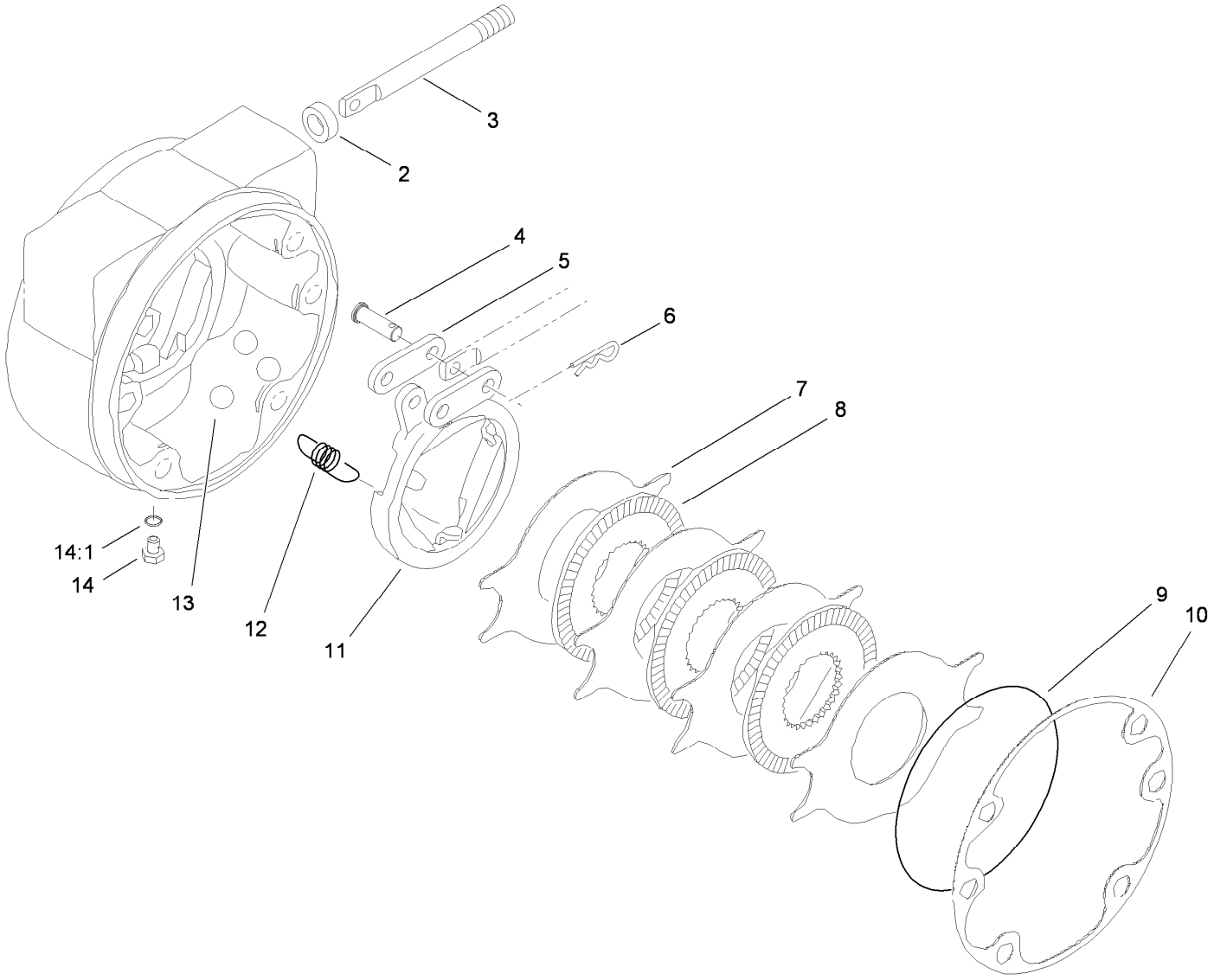

Brake Assembly No. 100-3070-03

Ref.	*Part Number*	*Qty.*	*Description*
2	93-7977	1	Seal
3	93-7978	1	Rod-Pull
4	93-7983	2	Pin-Clevis
5	93-7980	2	Link
6	93-7979	2	Pin-Hitch
7	93-7986	4	Disc-Stationary
8	104-4278	3	Disc-Rotating
9	93-7976	1	Ring-Retaining
10	93-7984	1	Gasket
11	104-4279	1	Actuator-Rotating
12	93-7987	3	Spring-Extension
13	93-7985	3	Ball
14	353-990	2	Plug ASM
14:1	237-78	1	O-Ring

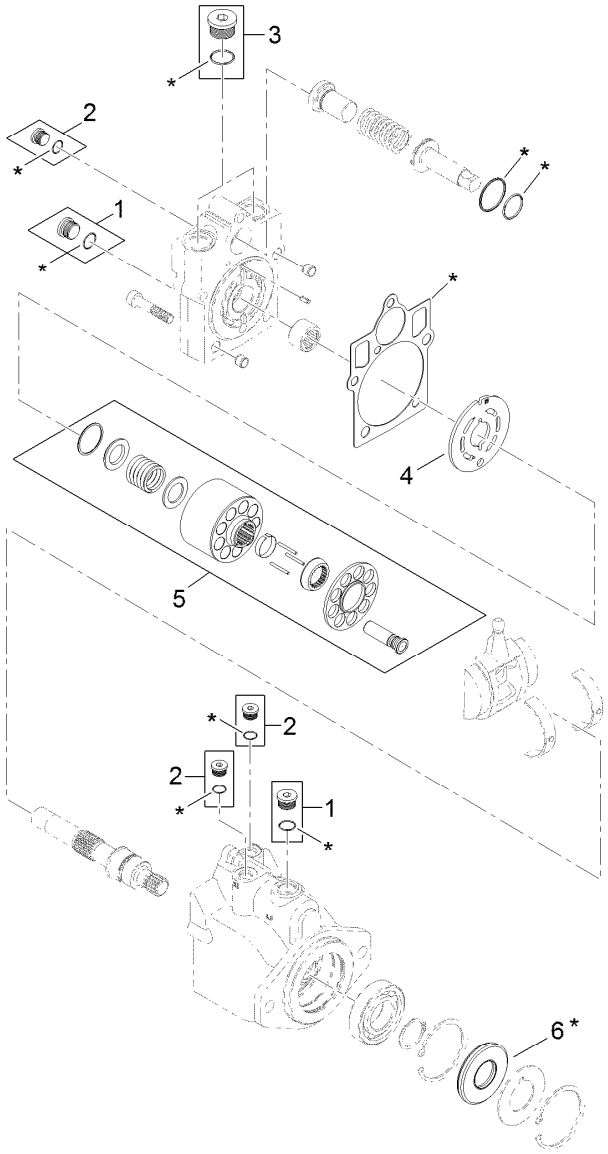

7 = all items with * are included in overhaul seal kit

Hydraulic Piston Motor Assembly No. 121-3100

Ref.	*Part Number*	*Qty.*	*Description*
1	67-9090	2	Plug
2	69-3080	3	Plug
3	107-4352	1	Plug
4	121-1734	1	Plate-Valve
5	121-1735	1	Cylinder Block Kit
6	69-3190	1	Seal-Lip
7	121-1736	1	Overhaul Seal Kit

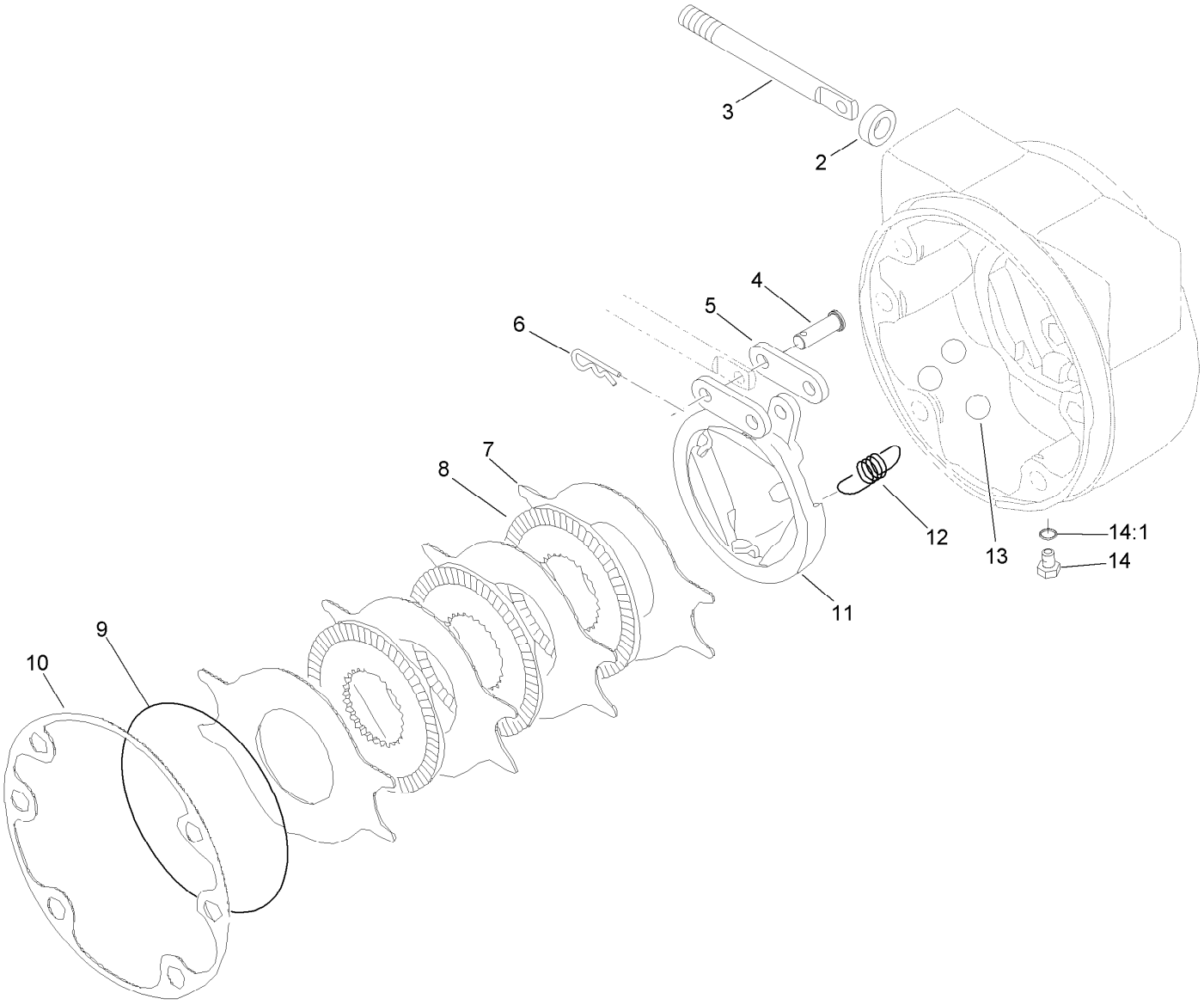

Brake Assembly No. 100-3069-03

Ref.	*Part Number*	*Qty.*	*Description*
2	93-7977	1	Seal
3	93-7978	1	Rod-Pull
4	93-7983	2	Pin-Clevis
5	93-7980	2	Link
6	93-7979	2	Pin-Hitch
7	93-7986	4	Disc-Stationary
8	104-4278	3	Disc-Rotating
9	93-7976	1	Ring-Retaining
10	93-7984	1	Gasket
11	104-4280	1	Actuator-Rotating
12	93-7987	3	Spring-Extension
13	93-7985	3	Ball
14	353-990	2	Plug ASM
14:1	237-78	1	O-Ring

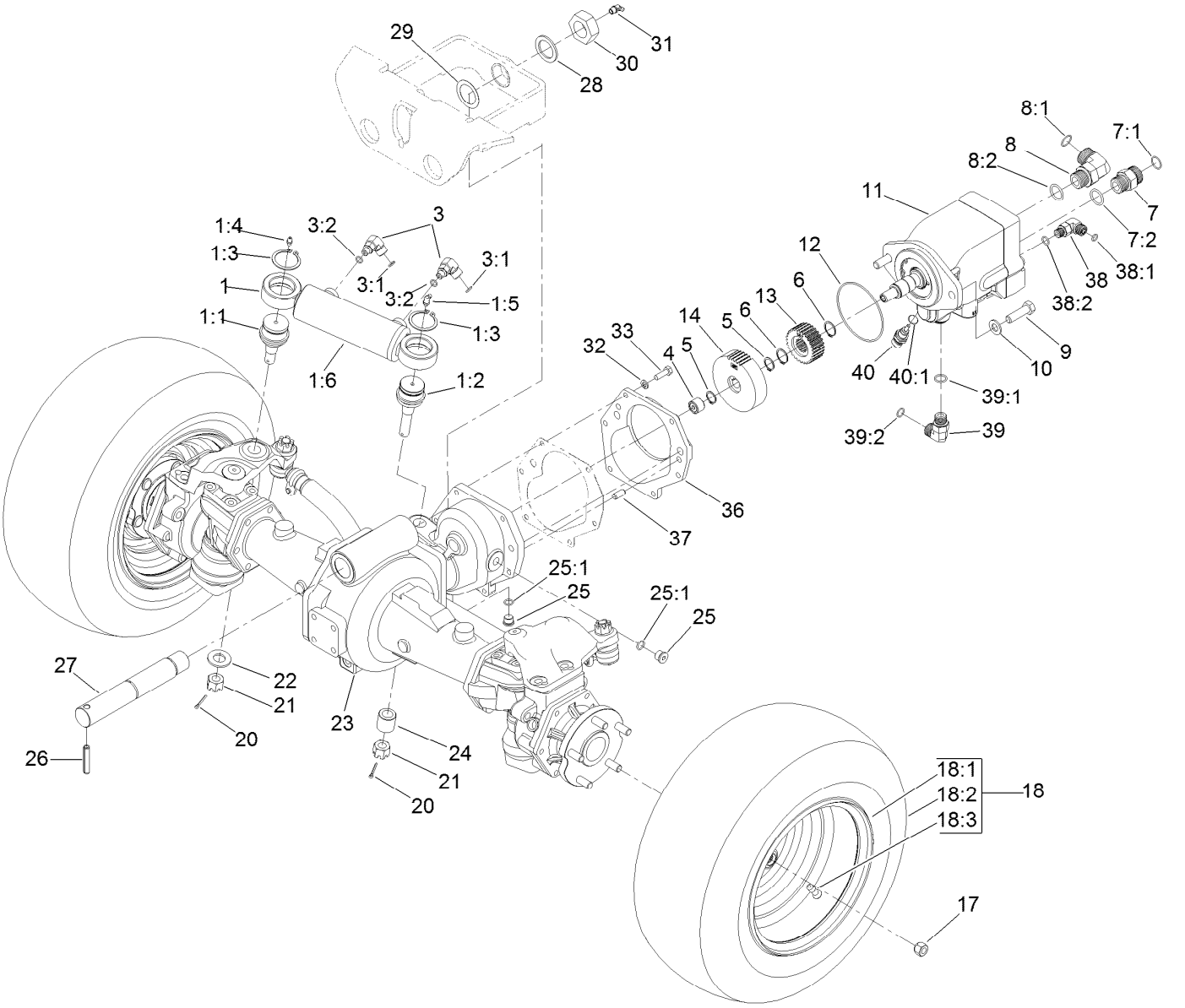

Rear Axle Assembly

Ref.	Part Number	Qty.	Description
1	105-9861	1	Steering Cylinder ASM
1:1	106-6774	1	Joint-Ball
1:2	100-3795	1	Joint-Ball
1:3	32151-104	2	Ring-Retaining, External
1:4	302-5	1	Fitting-Grease
1:5	302-60	1	Fitting-Grease
1:6	127-6431	1	Hydraulic Steer Cylinder ASM
3	340-97	2	Fitting-Elbow, 90 DEG
3:1	237-22	1	O-Ring
3:2	237-78	1	O-Ring
4	74-5700	1	Bearing-Needle, Roller
5	32120-15	2	Ring-Snap, EXT
6	32120-76	2	Ring-Snap, EXT
7	340-9	1	Fitting-STR
7:1	237-58	1	O-Ring
7:2	237-81	1	O-Ring
8	340-142	1	Fitting-Elbow, 90 DEG

Ref.	Part Number	Qty.	Description
8:1	237-58	1	O-Ring
8:2	237-81	1	O-Ring
9	325-7	2	Screw-HH
10	106-9888	2	Washer-Flat
11	121-3101	1	Motor-Piston
12	237-166	1	O-Ring
13	104-5663	1	Pinion-28T
14	104-5664	1	Gear-44T
17	93-5268	10	Nut-Lug
18		2	Rim And Tire ASM ●
18:1	115-1573	1	Rim
18:2	115-1572	1	Tire
18:3	232-27	1	Stem-Valve
20	3272-11	2	Pin-Cotter
21	32136-14	2	Nut-Hst
22	92-5836	1	Washer
23	110-4750	1	Drive Axle ASM
24	100-3796	1	Spacer-Joint, Ball

● Not serviced separately

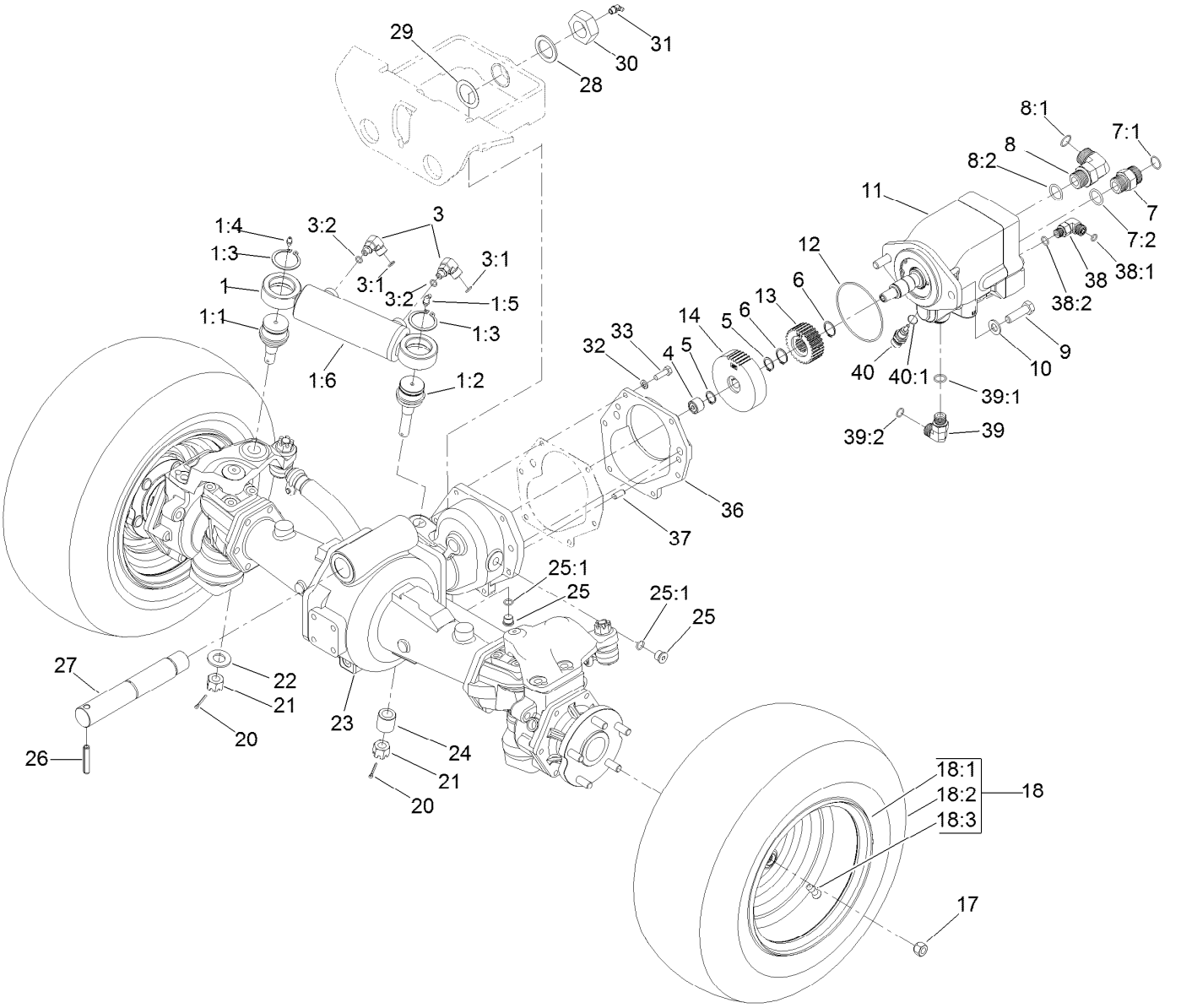

Rear Axle Assembly (continued)

Ref.	Part Number	Qty.	Description
25	353-989	2	Plug-Hex, Hollow
25:1	237-42	1	O-Ring
26	32121-110	1	Pin-Roll, Slotted
27	115-9142	1	Pin-Rear Axle
28	92-1765	1	Washer-Thrust
29	98-3867	2	Washer-Thrust
30	3296-68	1	Nut-Lock, NI
31	302-33	1	Fitting-Grease
32	3253-4	6	Washer-Lock
33	33114-025	6	Screw-HH

Ref.	Part Number	Qty.	Description
36	95-7541	1	Plate-Cover
37	104-2353	2	Pin-Dowel
38	340-77	1	Fitting-Elbow, 90 DEG
38:1	237-22	1	O-Ring
38:2	237-42	1	O-Ring
39	340-98	1	Fitting-Elbow, 90 DEG
39:1	237-79	1	O-Ring
39:2	237-30	1	O-Ring
40	110-8829	1	Sender-Temperature
40:1	237-42	1	O-Ring

● Not serviced separately

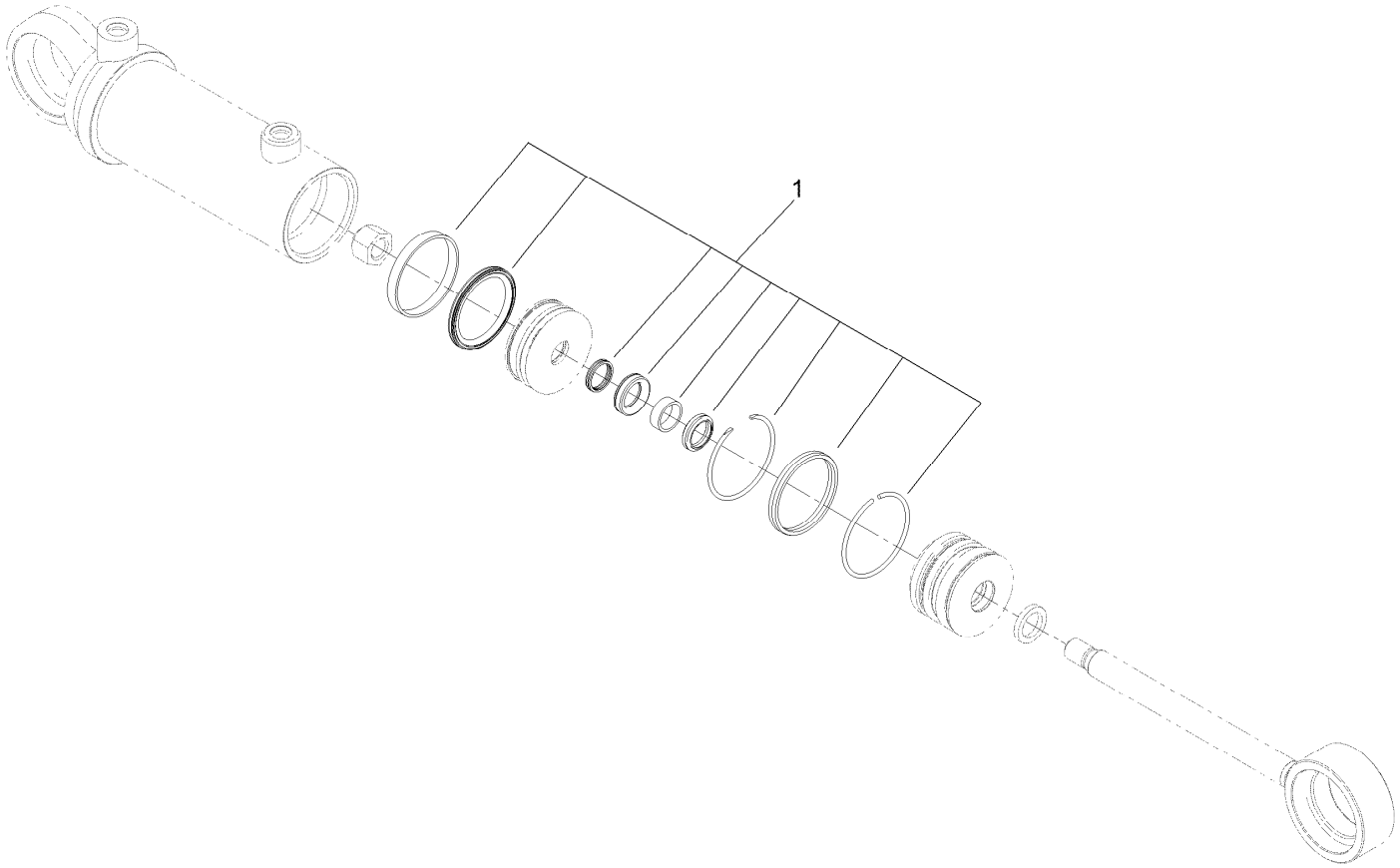

Hydraulic Steer Cylinder Assembly No. 127-6431

Ref.	*Part Number*	*Qty.*	*Description*
1	131-7756	1	Cylinder Seal Kit

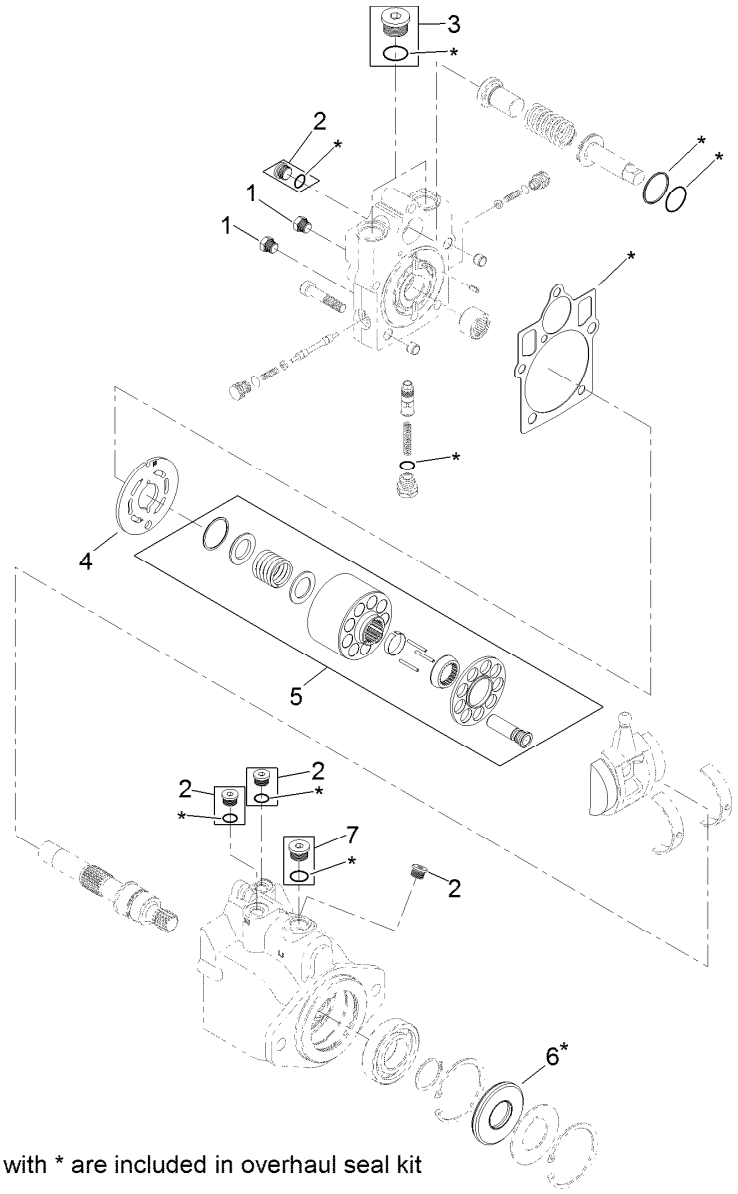

8= all items with * are included in overhaul seal kit

Piston Motor Assembly No. 121-3101

Ref.	*Part Number*	*Qty.*	*Description*
1	92-1352	2	Plug
2	69-3080	5	Plug
3	69-3130	2	Plug
4	125-4638	1	Valve Plate
5	125-4639	1	Cylinder Block Kit
6	69-3190	1	Seal-Lip
7	67-9090	1	Plug
8	121-1736	1	Overhaul Seal Kit

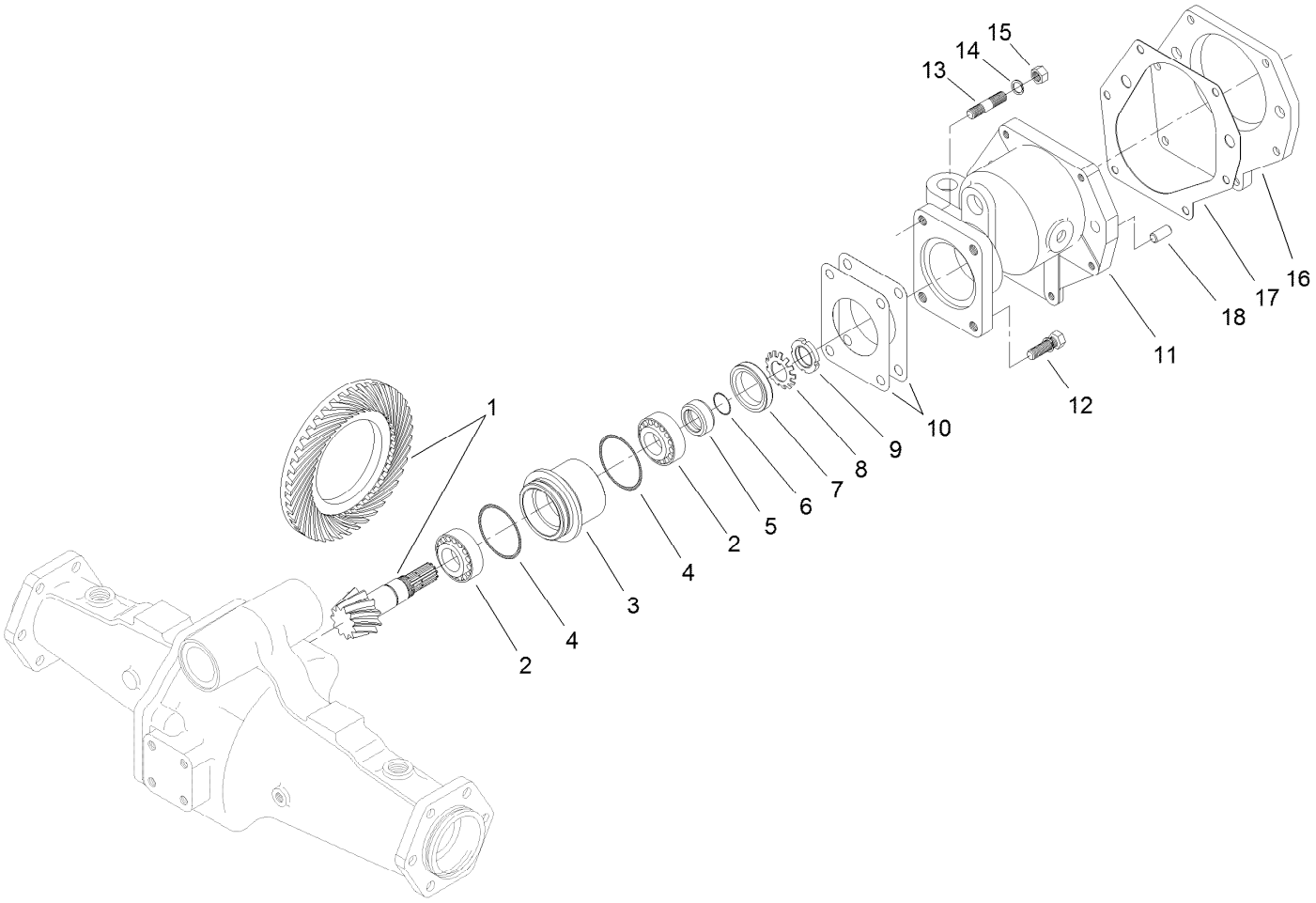

Bevel Pinion Shaft Assembly
Rear Axle Assembly No. 110-4750

Ref.	*Part Number*	*Qty.*	*Description*
1	106-1093	1	Ring And Pinion Set
2	99-7570	2	Bearing-Roller, Taper
3	95-7534	1	Case-Bearing
4	106-1065	2	O-Ring
5	99-7572	1	Collar-Seal, Oil
6	106-1066	1	O-Ring
7	99-7574	1	Seal-Oil
8	99-7559	1	Washer-Lock
9	99-7560	1	Nut-Lock
10	99-7550	2	Shim 0.1

Ref.	*Part Number*	*Qty.*	*Description*
10	99-7551	2	Shim 0.2
11	95-7533	1	Case-Gear
12	99-7575	2	Bolt
13	98-7735	2	Stud
14	99-7527	2	Washer-Spring
15	99-7526	2	Nut
16	95-7541	1	Plate-Cover
17	106-1140	1	Gasket
18	104-2353	2	Pin-Dowel

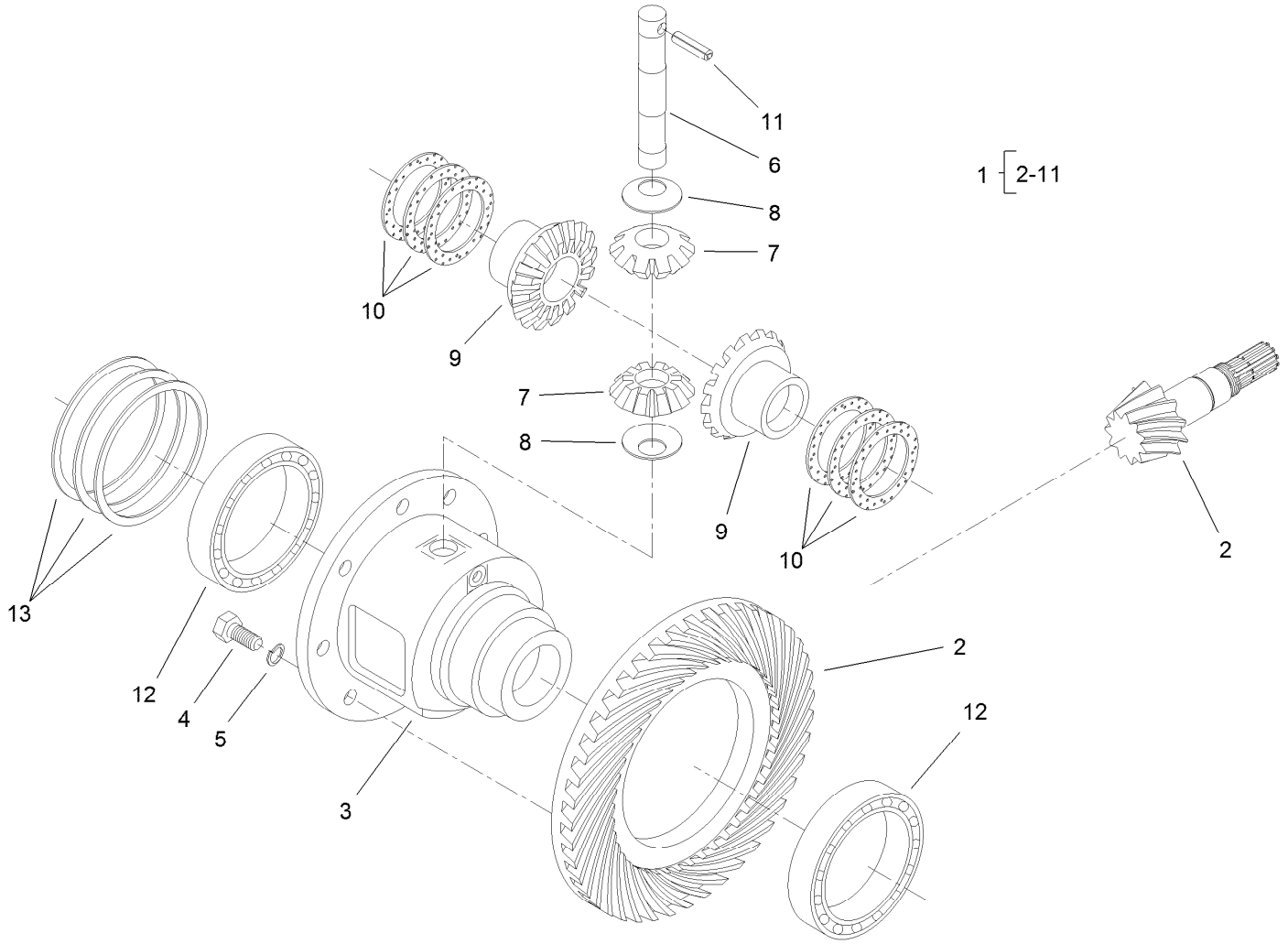

Differential Assembly
Rear Axle Assembly No. 110-4750

Ref.	*Part Number*	*Qty.*	*Description*
1	95-7503	1	Differential ASM
2	106-1093	1	Ring And Pinion Set
3	95-7502	1	Case-Differential
4	99-7576	8	Bolt
5	3253-4	8	Washer-Lock
6	99-7578	1	Shaft-Differential
7	99-7579	2	Pinion-Differential
8	99-7580	2	Washer-Differential
9	99-7581	2	Gear-Differential

Ref.	*Part Number*	*Qty.*	*Description*
10	99-7582	2	Washer-Differential
10	99-7583	2	Washer-Differential
10	99-7584	2	Washer-Differential
11	99-7588	1	Pin-Spring
12	99-7562	2	Bearing-Ball
13	99-7585	2	Shim 0.1
13	99-7586	2	Shim 0.2
13	99-7587	2	Shim 0.4

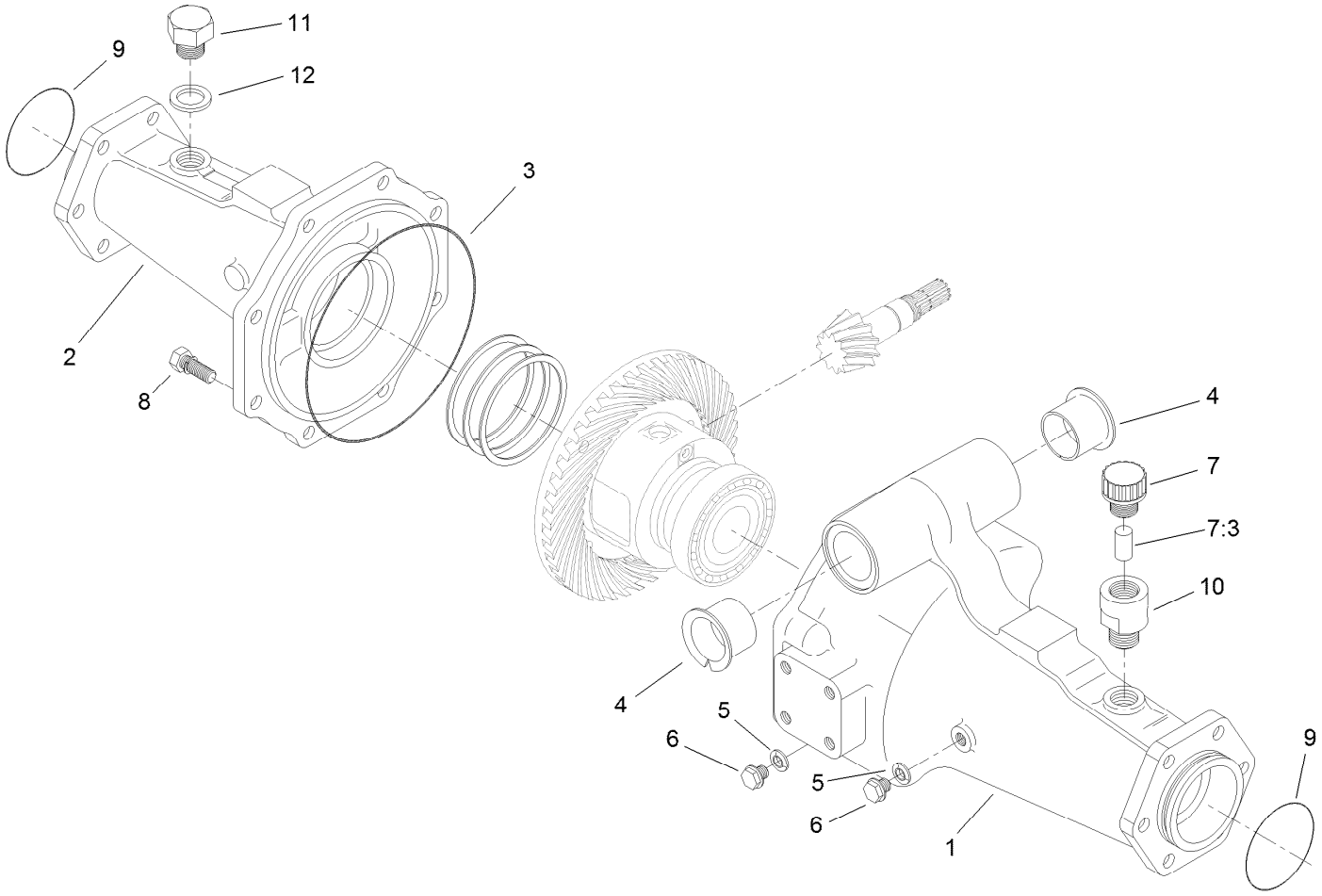

Axle Support Assembly
Rear Axle Assembly No. 110-4750

Ref.	*Part Number*	*Qty.*	*Description*
1	95-7508	1	Support-Axle
2	95-7506	1	Support-Axle
3	106-1067	1	O-Ring
4	95-7537	2	Bushing-Flanged
5	99-7590	2	Washer-Seal
6	99-7589	2	Plug
7	110-4812	1	Axle Vent ASM
7:3	110-4815	1	Insert-Filter, Foam
8	99-7592	8	Bolt
9	106-1068	2	O-Ring
10	104-2377	1	Extension-Vent
11	104-8643	1	Plug
12	104-8644	1	O-Ring

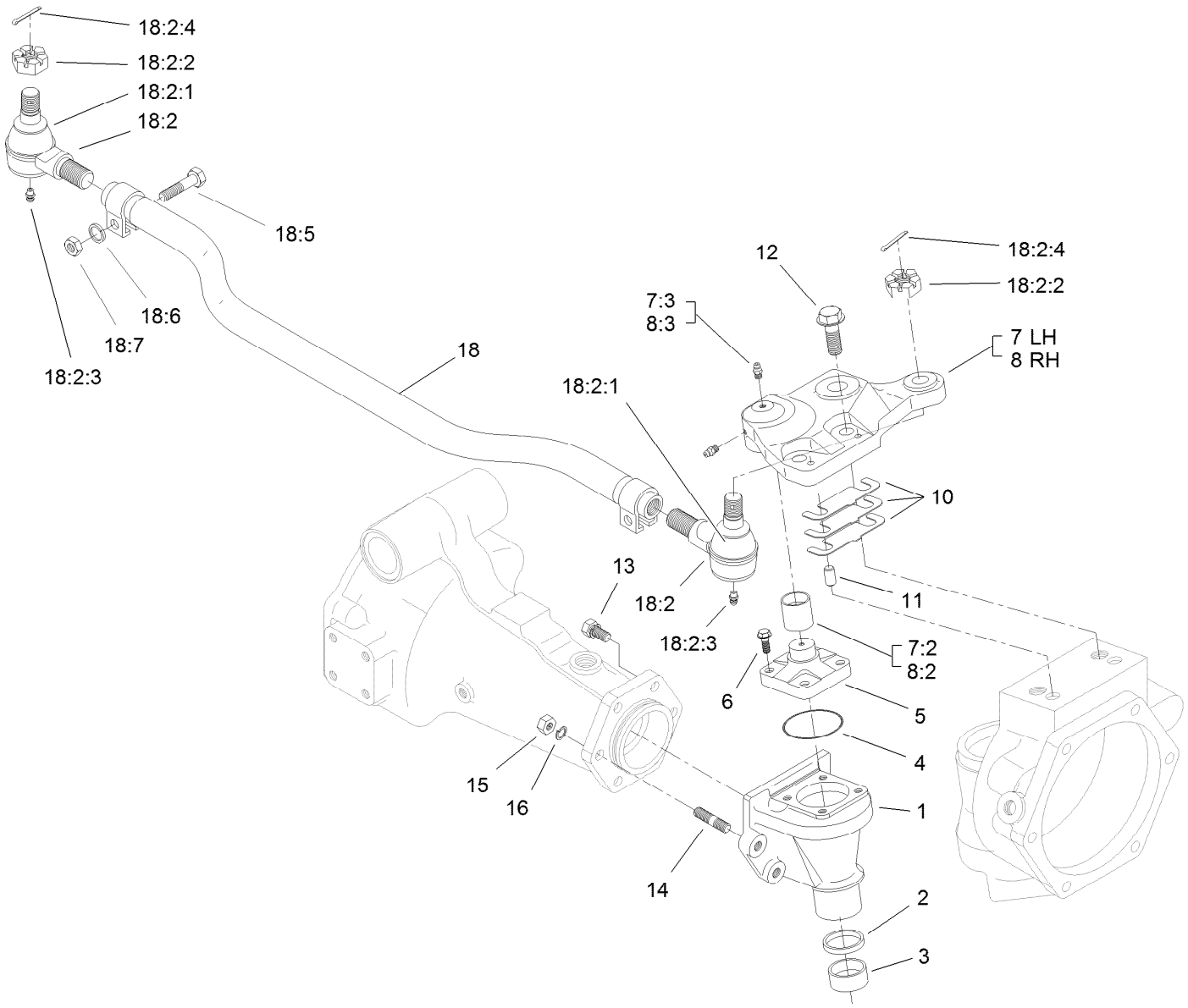

Bevel Gear Case Assembly
Rear Axle Assembly No. 110-4750

Ref.	Part Number	Qty.	Description
1	110-4752	2	Case-Gear, Bevel
2	110-4754	2	Seal-Oil
3	104-2378	2	Bushing
4	106-1069	2	O-Ring
5	104-2373	2	Knuckle
6	104-2374	8	Bolt
7	100-3768	1	LH Steering Arm ASM
7:2	104-8634	1	Bushing
7:3	106-1104	2	Fitting-Grease
8	100-3766	1	RH Steering Arm ASM
8:2	104-8634	1	Bushing
8:3	106-1104	2	Fitting-Grease
10	95-7547	2	Shim 0.1
10	95-7548	2	Shim 0.2
10	95-7549	2	Shim 0.3
11	99-7597	4	Pin-Dowel

Ref.	Part Number	Qty.	Description
12	104-2375	4	Bolt
13	99-7599	8	Bolt
14	99-7525	4	Stud
15	99-7526	4	Nut
16	99-7527	4	Washer-Spring
18	106-1141	1	Steering Tie Rod ASM
18:2	106-1113	2	Tie Rod End ASM - RH Thread
18:2:1	100-3853	1	Cover-Dust
18:2:2	100-3854	1	Nut-Castle
18:2:3	110-4755	1	Fitting-Grease
18:2:4	3272-11	1	Pin-Cotter
18:5	100-3855	2	Bolt
18:6	99-7527	2	Washer-Spring
18:7	99-7526	2	Nut

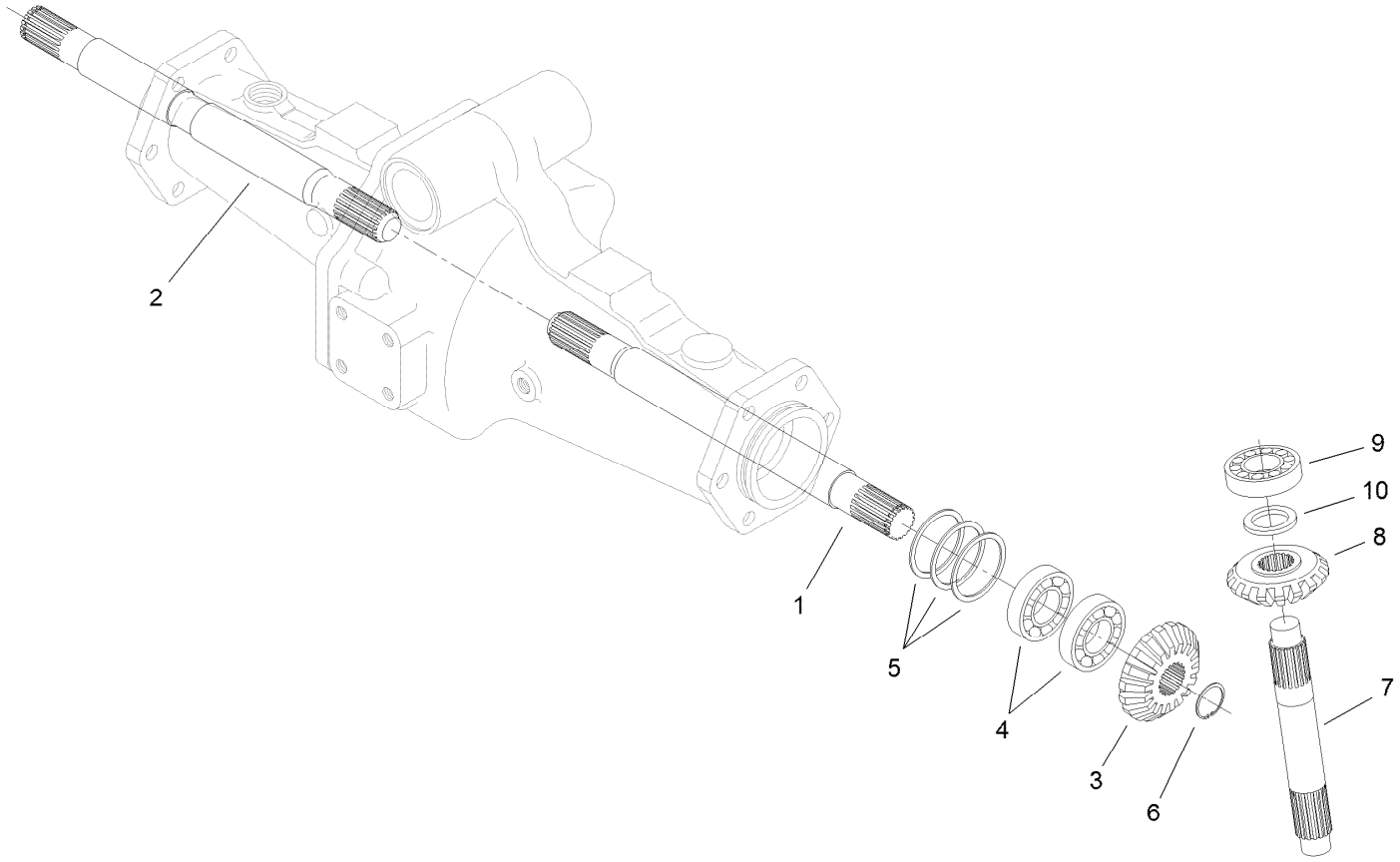

Bevel Gear Shaft Assembly
Rear Axle Assembly No. 110-4750

Ref.	*Part Number*	*Qty.*	*Description*
1	95-7509	1	Shaft-Gear, Differential
2	95-7512	1	Shaft-Gear, Differential
3	95-7517	2	Gear-Bevel, 15 Tooth
4	99-7530	4	Bearing-Ball
5	99-7552	2	Shim 0.1
5	99-7553	2	Shim 0.2
5	99-7554	2	Shim 0.5
6	99-7531	2	Clip
7	110-4753	2	Shaft-Gear, Bevel
8	95-7519	2	Gear-Bevel, 17 Tooth
9	99-7532	2	Bearing-Roller, Taper
10	99-7558	2	Collar

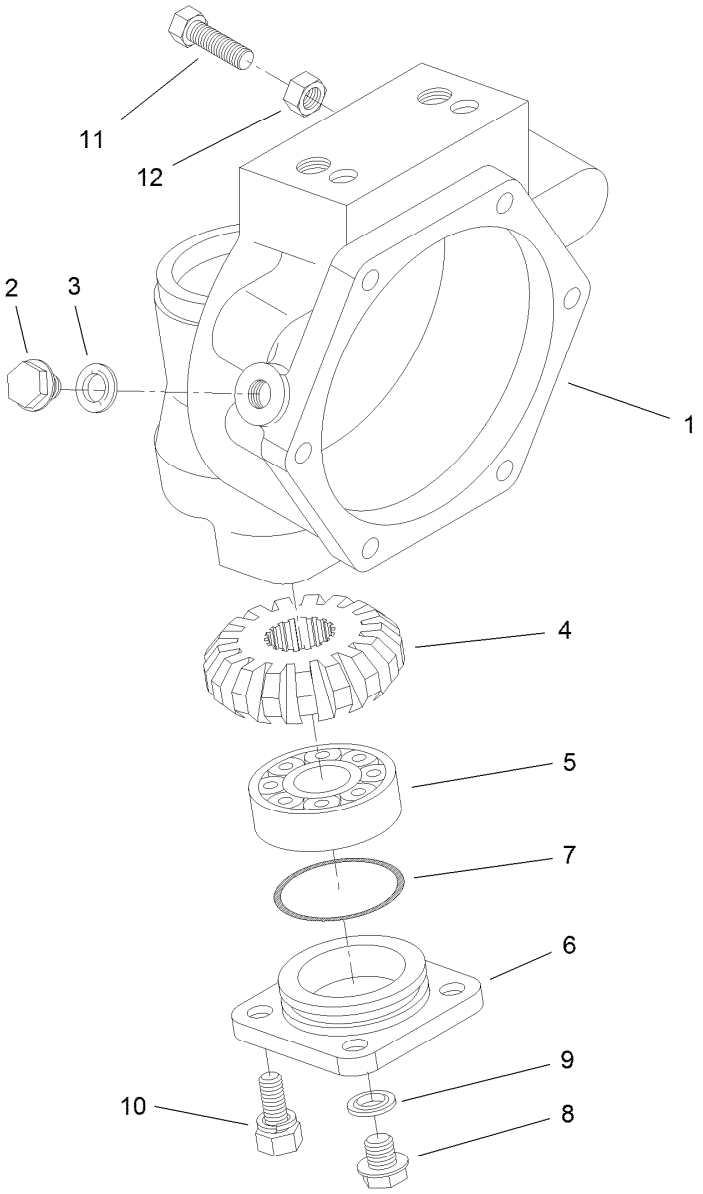

Axle Case Assembly
Rear Axle Assembly No. 110-4750

Ref.	*Part Number*	*Qty.*	*Description*
1	110-4751	2	Case-Axle
2	99-7535	2	Plug
3	99-7536	2	Washer-Seal
4	95-7527	2	Gear-Bevel, 17 Tooth
5	99-7532	2	Bearing-Roller, Taper
6	100-2560	2	Cover
7	106-1070	2	O-Ring
8	99-7589	2	Plug
9	99-7590	2	Washer-Seal
10	100-2562	8	Bolt
11	106-1102	2	Bolt-Stop
12	106-1103	2	Nut

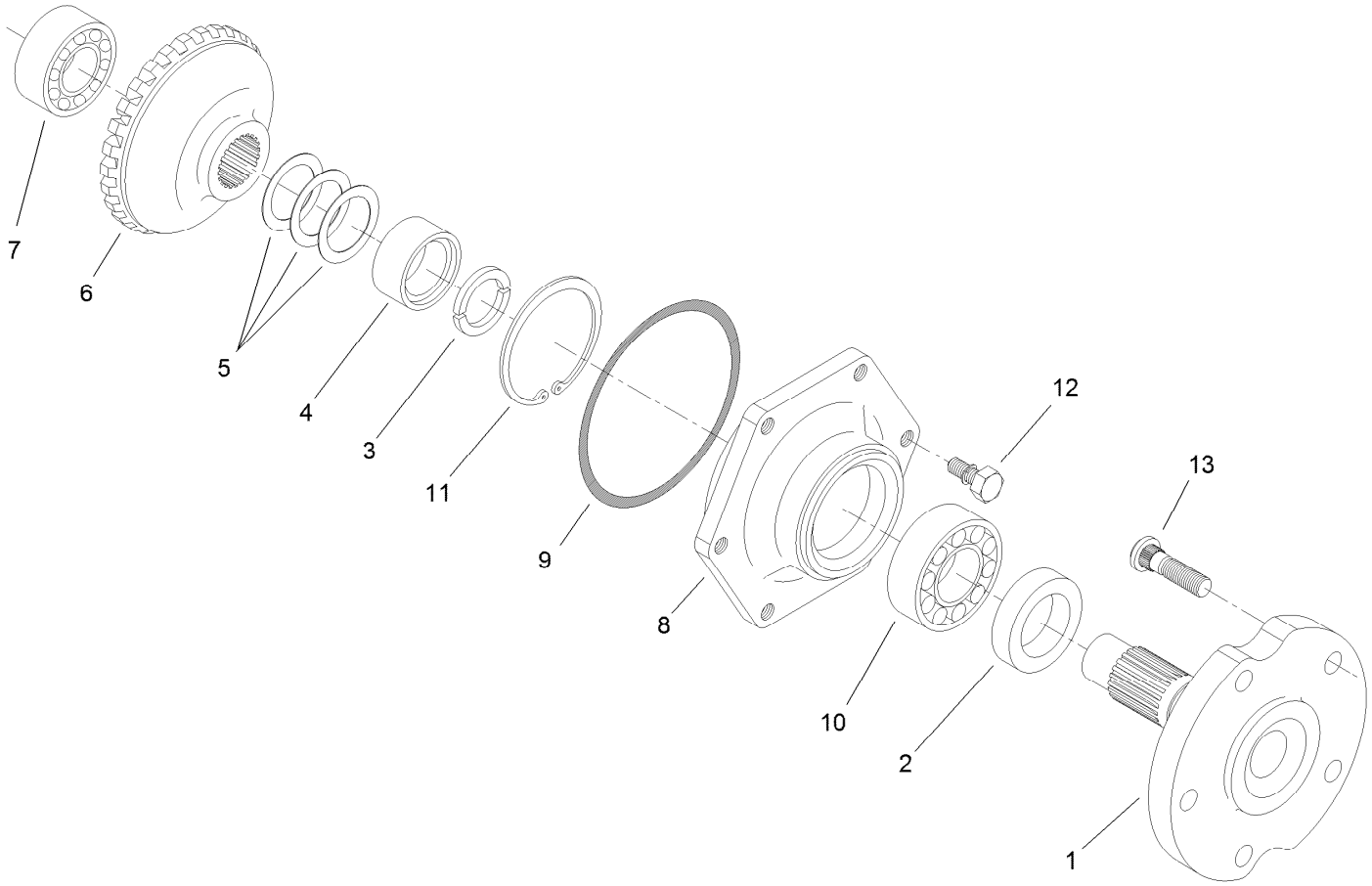

Axle Assembly
Rear Axle Assembly No. 110-4750

Ref.	*Part Number*	*Qty.*	*Description*
1	95-7522	2	Axle
2	99-7564	2	Seal-Oil
3	95-7544	4	Clip
4	95-7523	2	Spacer
5	99-7555	2	Shim 0.3
5	99-7556	2	Shim 0.2
5	99-7557	2	Shim 0.5
6	95-7524	2	Gear-Bevel, 29 Tooth
7	99-7534	2	Bearing-Ball
8	95-7521	2	Cover-Axle
9	106-1071	2	O-Ring
10	99-7561	2	Bearing-Ball
11	99-7539	2	Clip
12	99-7596	12	Bolt
13	99-7563	10	Stud

Hydraulic System Assembly

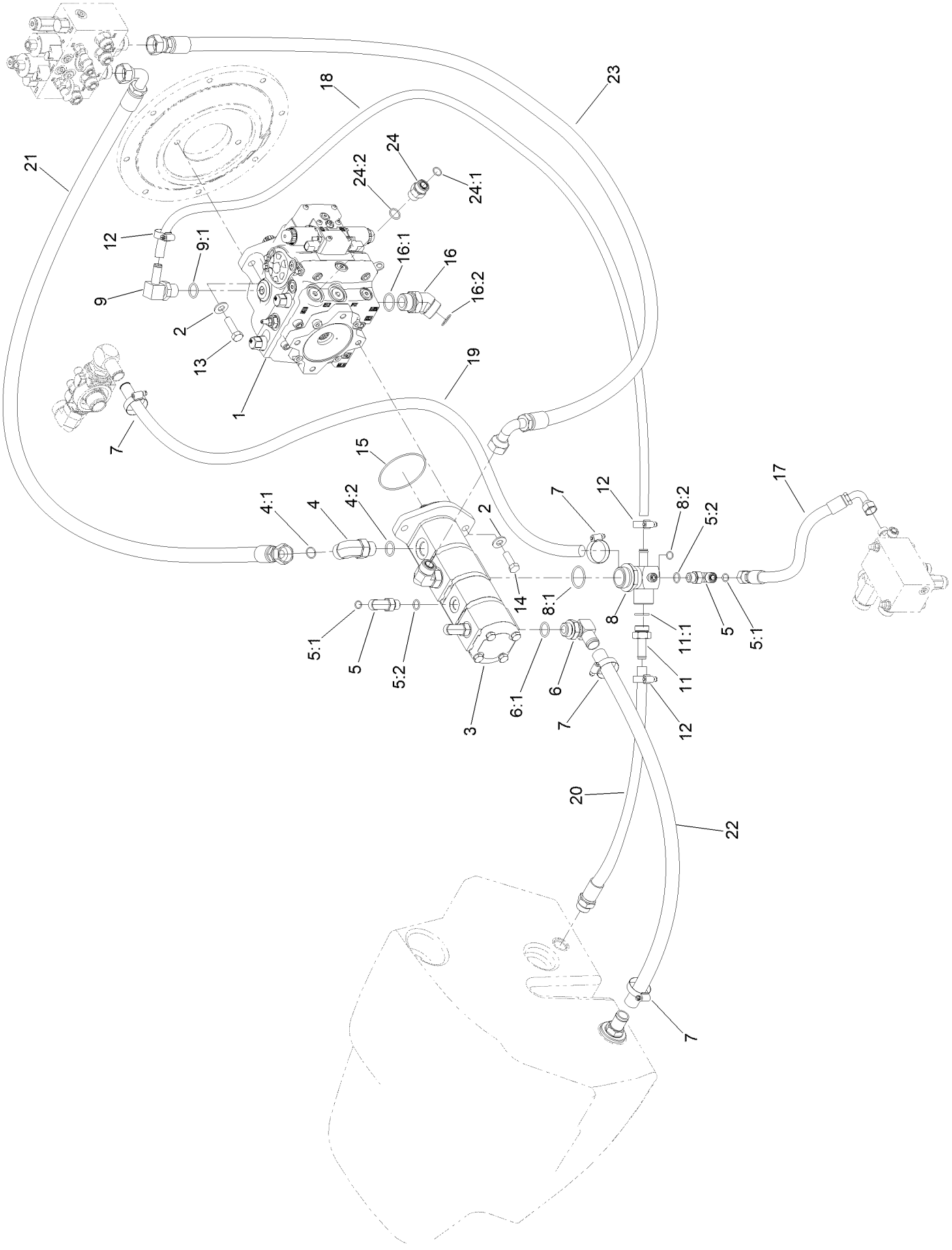

Hydraulic System Assembly (continued)

Ref.	Part Number	Qty.	Description
1	120-9059	1	Piston Pump ASM
2	87-7270	4	Washer-Thrust
3	114-4189	1	4-Section Pump ASM
4	340-142	2	Fitting-Elbow, 90 DEG
4:1	237-58	1	O-Ring
4:2	237-81	1	O-Ring
5	340-98	3	Fitting-Elbow, 90 DEG
5:1	237-79	1	O-Ring
5:2	237-30	1	O-Ring
6	100-4202	1	Fitting-90
6:1	237-81	1	O-Ring
7	2412-111	4	Clamp-Hose, W/Liner
8	120-8016	1	Fitting-Tee
8:1	237-101	1	O-Ring
8:2	237-22	1	O-Ring
9	117-3681	1	Fitting-Elb 90
9:1	237-81	1	O-Ring
11	121-1526	1	Fitting-STR
11:1	237-81	1	O-Ring
12	2412-129	3	Clamp-Hose
13	121-1524	2	Screw-HH
14	121-1525	2	Screw-HH
15	107-9447	1	O-Ring
16	104-3509	2	Fitting-HYD, 45 DEG
16:1	237-146	1	O-Ring
16:2	340-65	1	O-Ring
17	125-4616	1	Hose ASM
18	120-9050	1	Hose-HYD
19	121-3062	1	Hose-Suction
20	121-3079	1	Hose ASM
21	105-3874	1	Hose ASM
22	125-4568	1	Hose-Suction
23	115-4384	1	Hose-HYD
24	340-7	1	Fitting-Straight
24:1	237-65	1	O-Ring
24:2	237-80	1	O-Ring

Piston Pump Assembly No. 120-9059

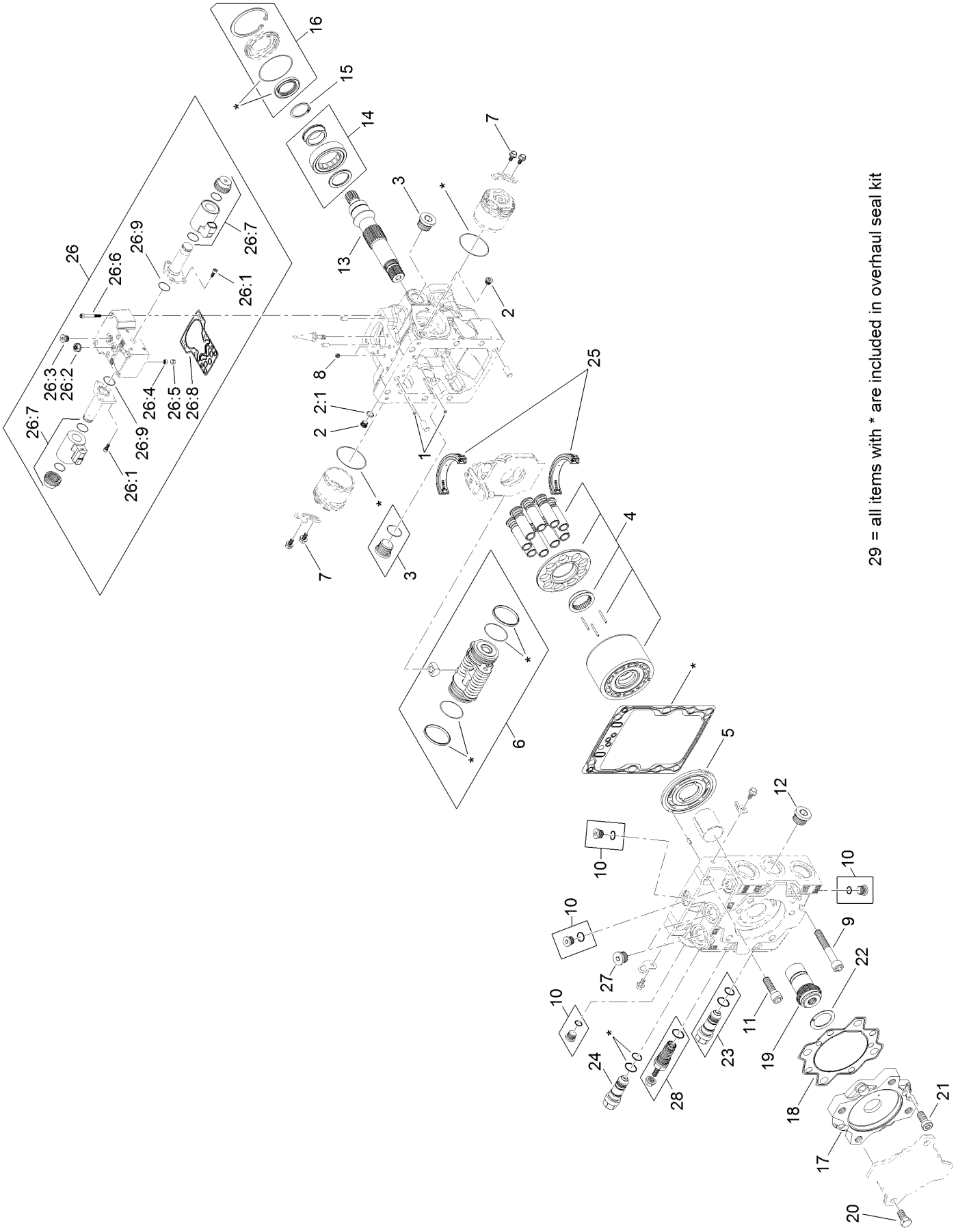

Piston Pump Assembly No. 120-9059 (continued)

Ref.	Part Number	Qty.	Description
1	125-5266	2	Screen
2	75-0170	2	Plug-Thread, Straight
2:1	92-8777	1	O-Ring
3	107-4352	2	Plug
4	121-1723	1	Cylinder Block Kit
5	121-1724	1	Plate-Valve, CW
6	121-1725	1	Servo Piston ASM
7	125-5270	6	Screw
8	125-5276	2	Orifice (0.8)
9	121-1726	4	Screw
10	125-5300	4	Plug ASM
11	121-1727	2	Screw
12	125-5301	1	Plug
13	121-1728	1	Shaft
14	125-5279	1	Bearing-Roller
15	125-5280	1	Ring-Retaining
16	121-1729	1	Shaft Seal Kit
17	125-5284	1	Adapter
18	125-5285	1	Seal-Adapter
19	121-1730	1	Coupling
20	125-5281	4	Screw
21	125-5282	4	Screw
22	125-5287	1	Plate-Thrust
23	121-1731	1	Valve-Relief, High Pressure
24	125-5291	1	Valve-Relief, High Pressure
25	121-1732	1	Swash Plate Bearing Kit
26	125-5295	1	Control Kit (12 Volt)
26:1	125-5272	6	Screw
26:2	125-5273	1	Nut-Seal
26:3	125-5302	1	Plug
26:4	125-5266	1	Screen
26:5	125-5269	1	Ring-Locking
26:6	125-5274	6	Screw
26:7	125-5294	2	Coil Kit
26:8	125-5283	1	Gasket-Control
26:9	125-5288	2	O-Ring
27	125-5303	2	Plug ASM
28	125-5297	1	Charge Relief Kit
29	121-1733	1	Overhaul Seal Kit

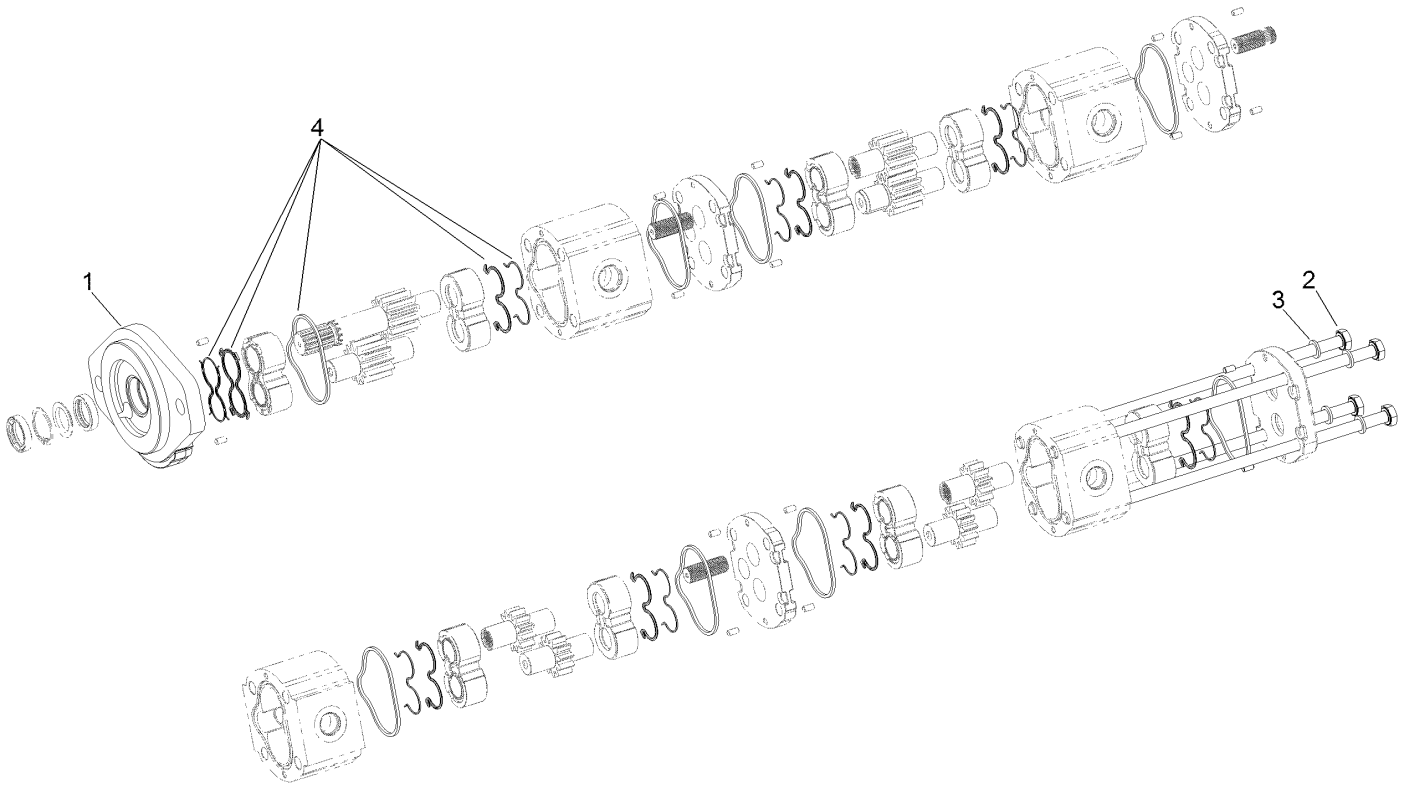

Four Section Pump Assembly No. 114-4189

Ref.	*Part Number*	*Qty.*	*Description*
1	115-3774	1	Cover-Front
2	115-4444	4	Bolt
3	115-9138	4	Washer
4	115-3776	1	Seal Kit

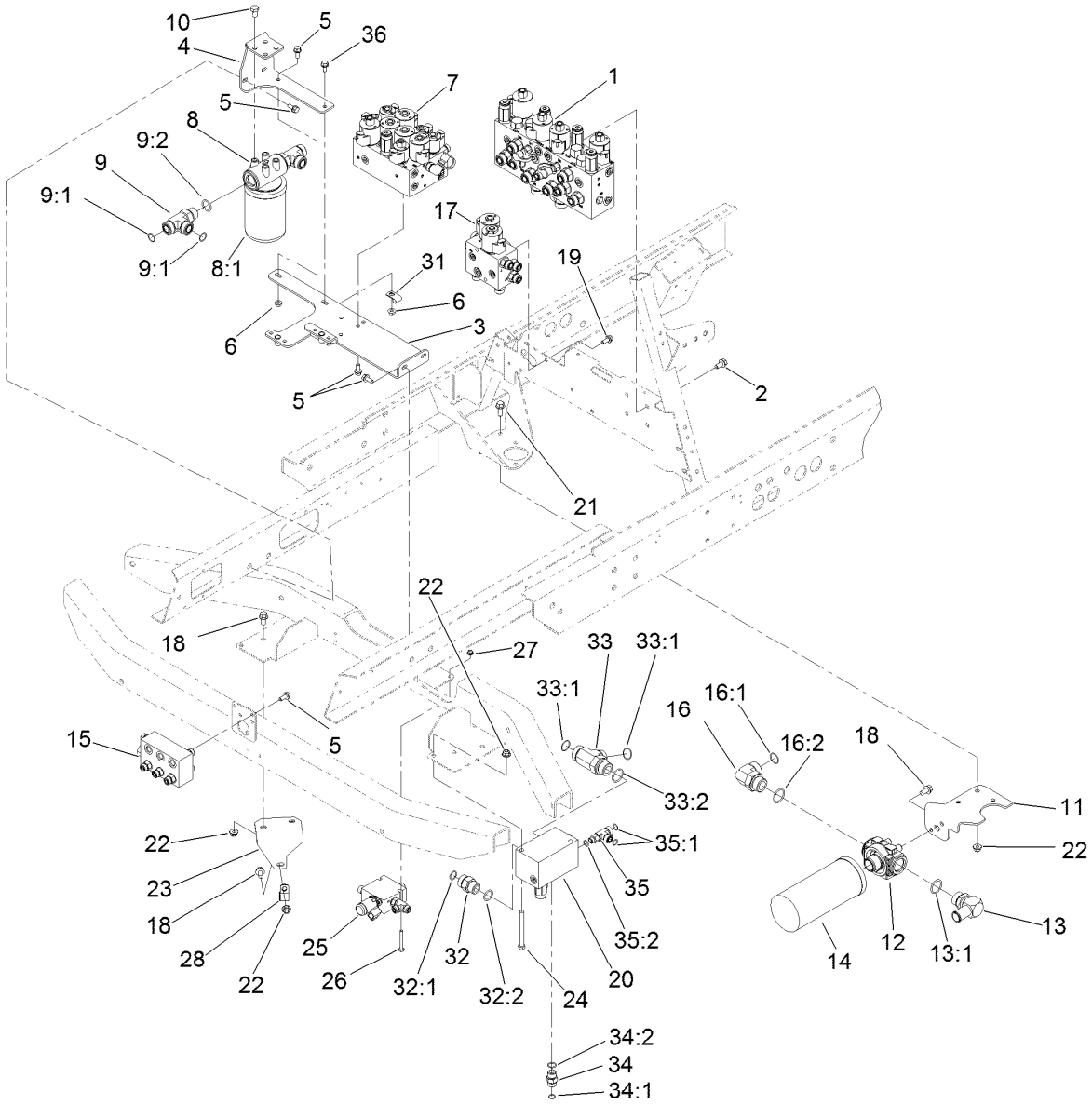

Hydraulic Valve Mounting Assembly

Ref.	Part Number	Qty.	Description
1	120-8064	1	Mow Manifold ASM
2	110-1718	4	Screw-HHSF,Patch
3	117-2362	1	Bracket-Mount, Valve
4	104-5492-03	1	Bracket-Mount, Filter
5	3234-5	9	Screw-HHF
6	32128-20	2	Nut-HF
7	117-2388	1	Lift Manifold ASM
8	93-2242	1	Oil Filter ASM
8:1	75-1310	1	Filter-HYD
9	340-148	2	Fitting-Tee
9:1	237-81	1	O-Ring
9:2	237-58	2	O-Ring
10	33115-016	4	Screw-HH
11	120-8022-03	1	Plate-Mount, Filter
12	121-1577	1	Head-Filter
13	23-8910	1	Stem-Barb-90
13:1	237-146	1	O-Ring
14	94-2621	1	Element-Filter
15	117-2394	1	Junction Manifold ASM
16	340-129	1	Fitting-Elbow, 90 DEG
16:1	237-146	1	O-Ring

Ref.	Part Number	Qty.	Description
16:2	340-65	1	O-Ring
17	117-2395	1	Fan Drive Manifold ASM
18	3234-1	5	Screw-HHF
19	100-1668	2	Screw-HHF
20	121-3078	1	Rear Traction Manifold ASM
21	3234-11	2	Screw-HHF
22	104-8301	7	Nut-HF, NI
23	121-3089-03	1	Plate-Mount,Tube
24	323-42	2	Screw-HH
25	121-3077	1	3 Way Valve Manifold ASM
26	321-11	2	Screw-HH
27	104-7201	2	Nut-HF, NI
28	2412-150	1	Clip-J
31	56-7973	2	Clamp-Tube
32	340-9	1	Fitting-STR
32:1	237-58	1	O-Ring
32:2	237-81	1	O-Ring
33	104-3795	1	Fitting-Tee
33:1	340-65	2	O-Ring
33:2	237-146	1	O-Ring
34	340-4	1	Fitting-Straight

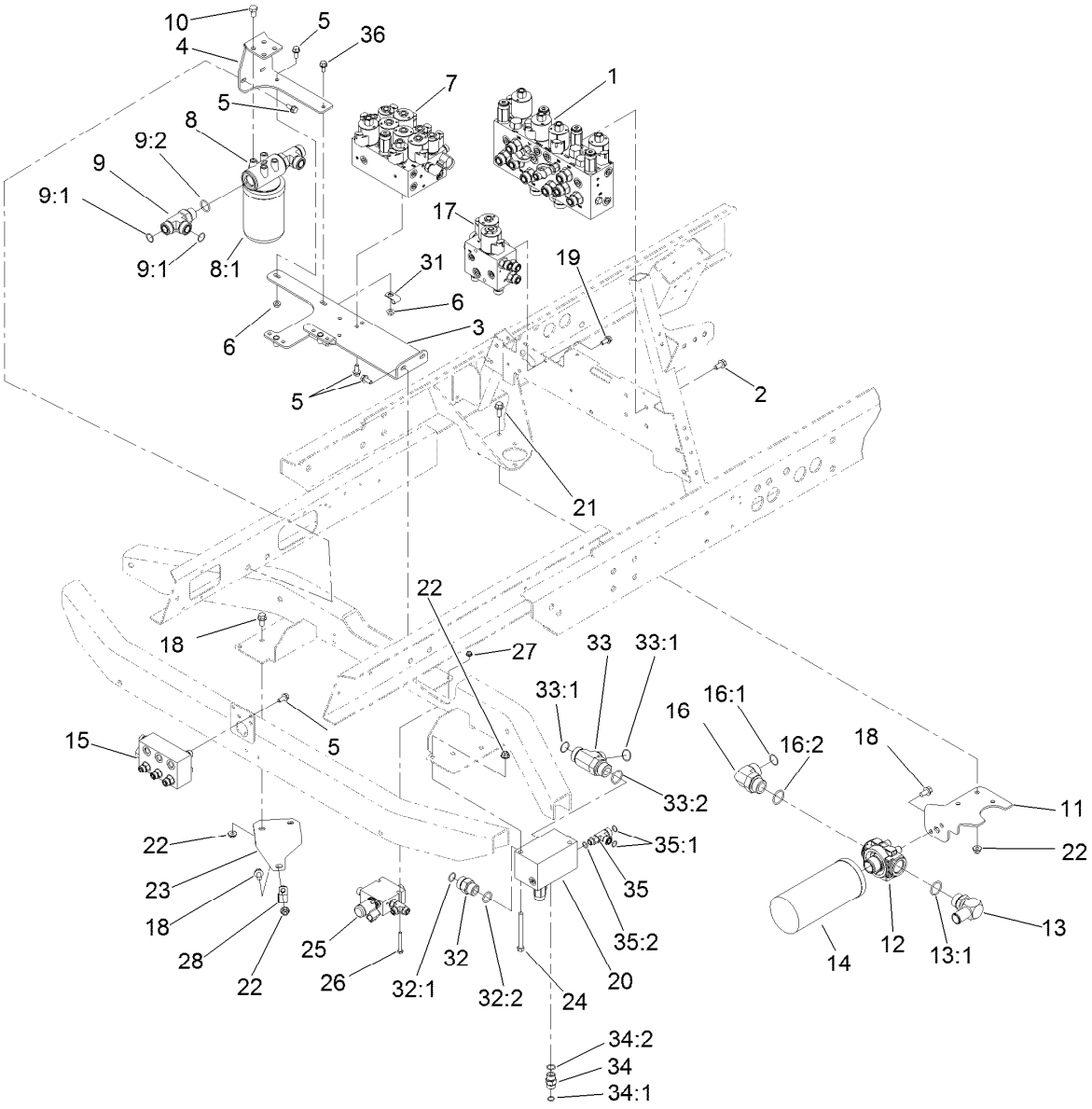

Hydraulic Valve Mounting Assembly (continued)

Ref.	Part Number	Qty.	Description
34:1	237-30	1	O-Ring
34:2	237-79	1	O-Ring
35	110-0064	1	Fitting-Tee

Ref.	Part Number	Qty.	Description
35:1	237-30	2	O-Ring
35:2	237-42	1	O-Ring
36	115-1794	1	Screw-HHF

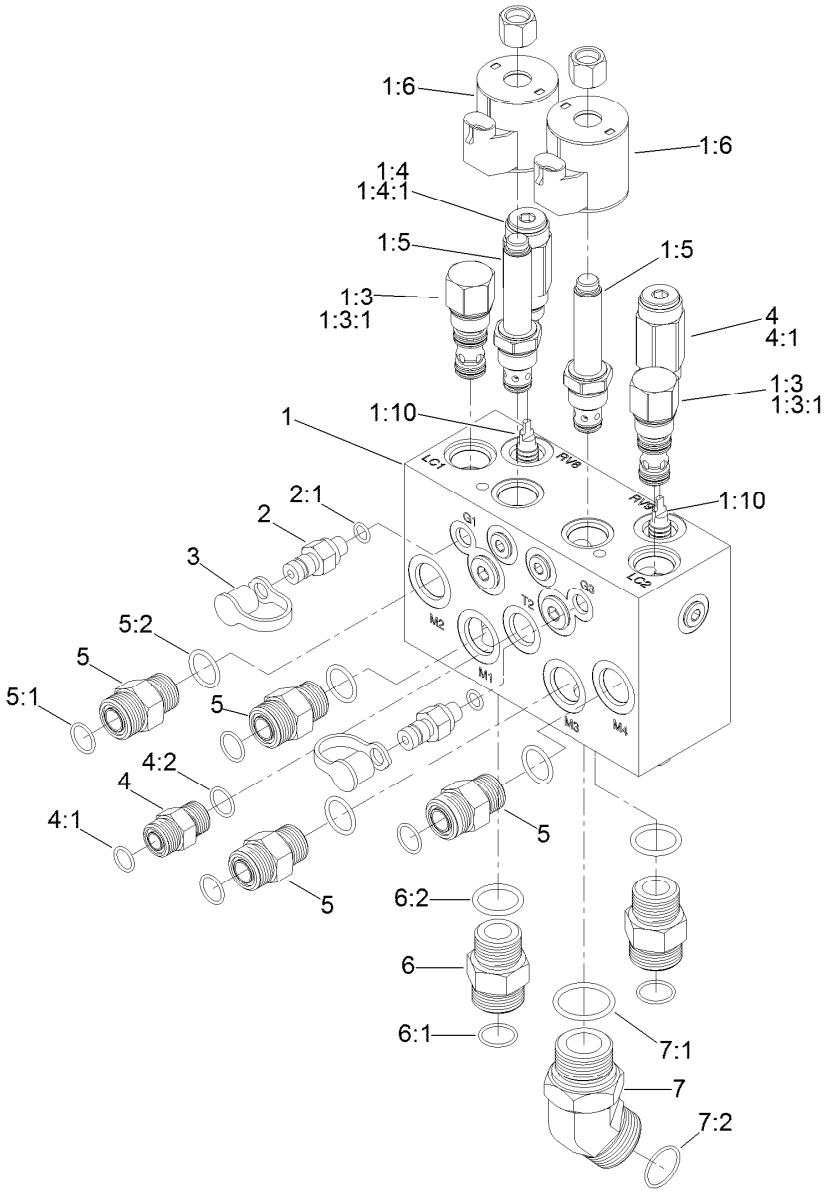

Mow Manifold Assembly No. 120-8064

Ref.	Part Number	Qty.	Description
1		1	Manifold-Mow ●
1:3	105-9153	2	Element-Logic, Vented
1:3:1	119-2159	1	Seal Kit
1:4	112-5259	2	Valve-Relief
1:4:1	105-9156	1	Seal Kit
1:5	110-8799	2	Valve-Relief, Proportional
1:6	110-6344	2	Coil-12V, DC
1:10	105-9157	2	Piston-Pilot
2	354-77	2	Fitting-Quick
2:1	237-78	1	O-Ring
3	354-79	2	Cap-Dust
4	340-4	1	Fitting-Straight
4:1	237-30	1	O-Ring

Ref.	Part Number	Qty.	Description
4:2	237-79	1	O-Ring
5	340-7	4	Fitting-Straight
5:1	237-65	1	O-Ring
5:2	237-80	1	O-Ring
6	340-9	1	Fitting-STR
6:1	237-58	1	O-Ring
6:2	237-81	1	O-Ring
7	104-3509	1	Fitting-HYD, 45 DEG
7:1	237-146	1	O-Ring
7:2	340-65	1	O-Ring
8	340-142	1	Fitting-Elbow, 90 DEG
8:1	237-58	1	O-Ring
8:2	237-81	1	O-Ring

● Not serviced separately

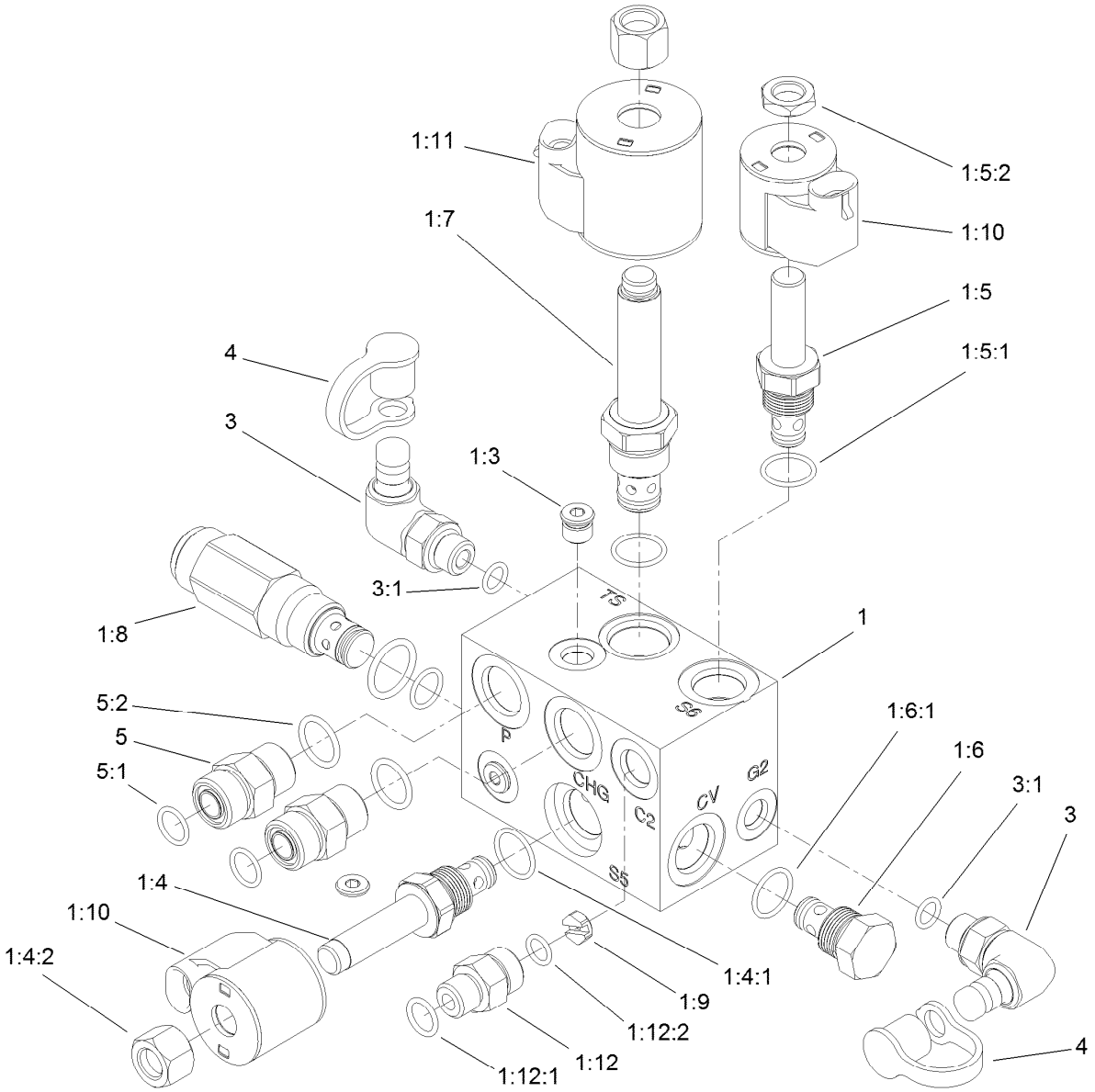

Lift Manifold Assembly No. 117-2388

Ref.	Part Number	Qty.	Description
1		1	Manifold-Lift ■
1:3	106-1025	3	Plug-HYD
1:4	107-7517	1	Valve-Solenoid
1:4:1	105-9156	1	Seal Kit ●
1:4:2	107-7812	1	Nut-Solenoid
1:5	112-9206	1	Solenoid Valve ASM
1:5:1	105-9156	1	Seal Kit
1:5:2	110-2634	1	Nut-Coil
1:6	105-9321	1	Check Valve ASM
1:6:1	105-9156	1	Seal Kit
1:7	117-2399	1	Relief Valve-Proportional
1:8	117-4793	1	Valve-Relief

Ref.	Part Number	Qty.	Description
1:9	117-4756	1	Orifice-Flow Control, .080
1:10	110-0497	2	Coil-Solenoid
1:11	110-6344	1	Coil-12V, DC
1:12	340-2	1	Fitting-Straight
1:12:1	237-22	1	O-Ring
1:12:2	237-42	1	O-Ring
3	115-9147	2	Fitting-Elbow, 90 DEG
3:1	237-78	1	O-Ring
4	354-79	2	Cap-Dust
5	340-4	2	Fitting-Straight
5:1	237-30	1	O-Ring
5:2	237-79	1	O-Ring

● Not illustrated

■ Not serviced separately

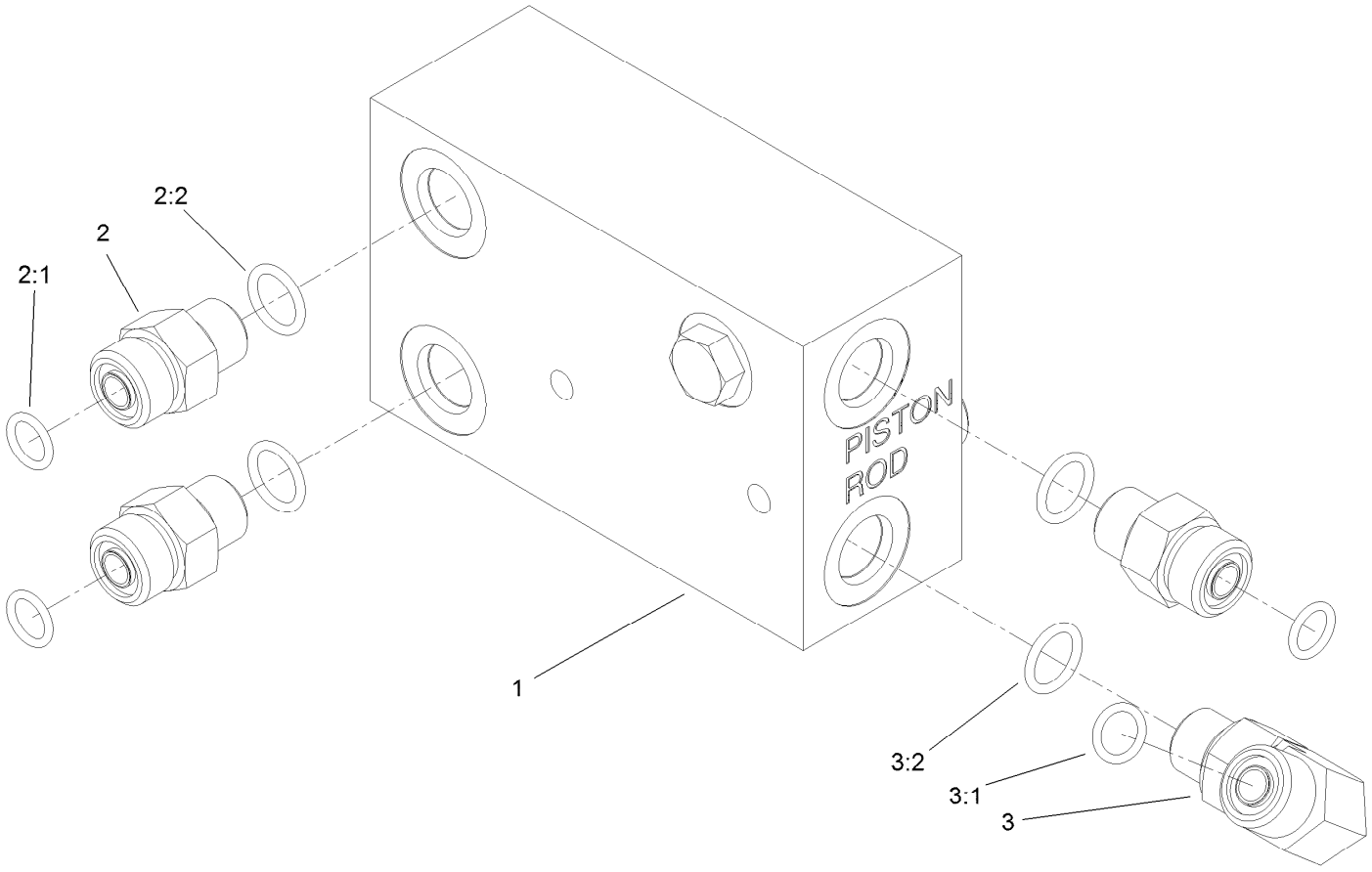

Junction Manifold Assembly No. 117-2394

Ref.	*Part Number*	*Qty.*	*Description*
1		1	Manifold-Junction ●
2	340-2	3	Fitting-Straight
2:1	237-22	1	O-Ring
2:2	237-42	1	O-Ring
3	340-77	1	Fitting-Elbow, 90 DEG
3:1	237-22	1	O-Ring
3:2	237-42	1	O-Ring

● Not serviced separately

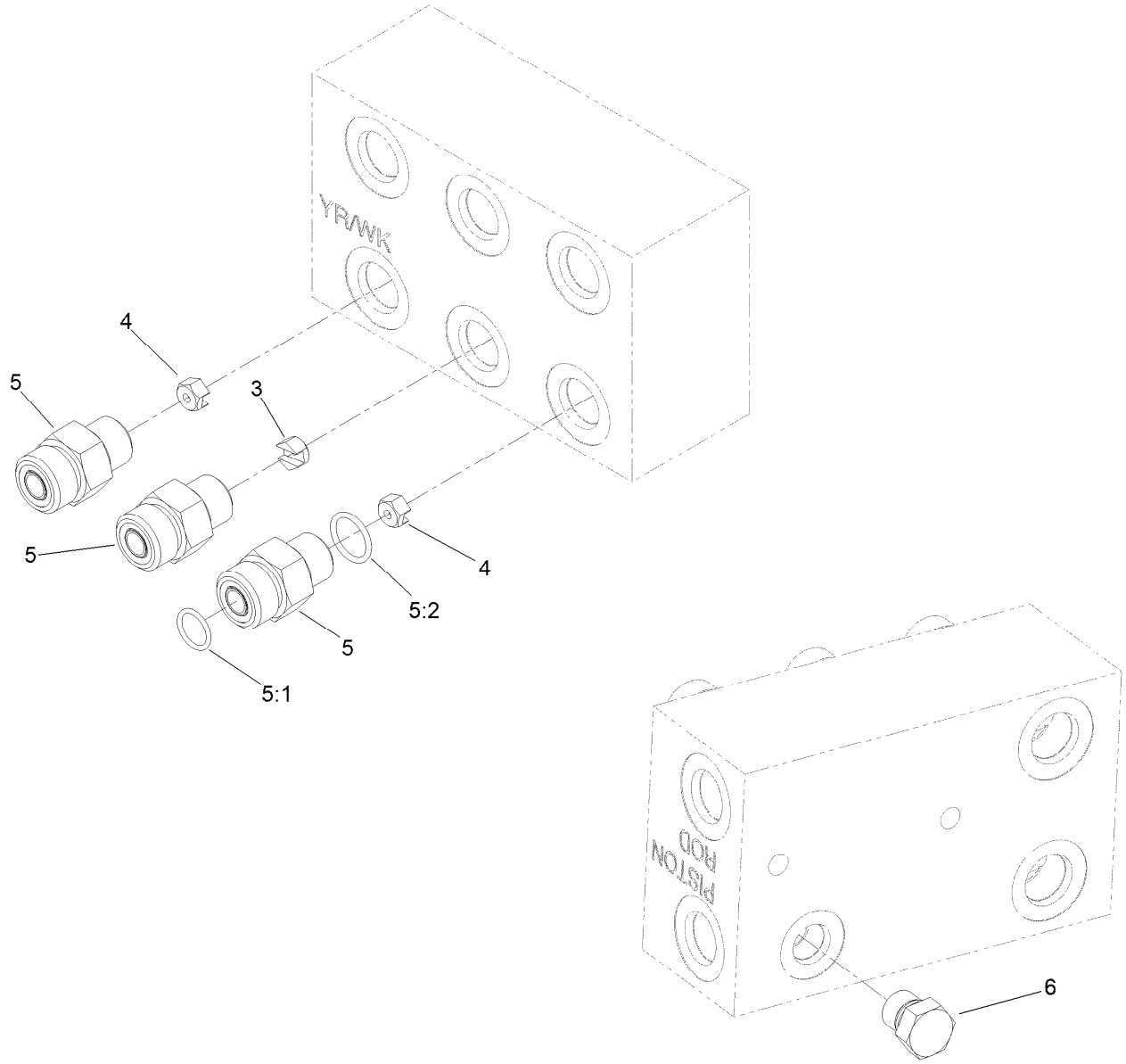

Junction Manifold Assembly

Ref.	*Part Number*	*Qty.*	*Description*
3	119-2010	1	Orifice-Control, Flow (0.055)
4	119-2009	2	Orifice-Flow Control (0.030)
5	340-2	3	Fitting-Straight
5:1	237-22	1	O-Ring
5:2	237-42	1	O-Ring
6	117-0115	1	Plug

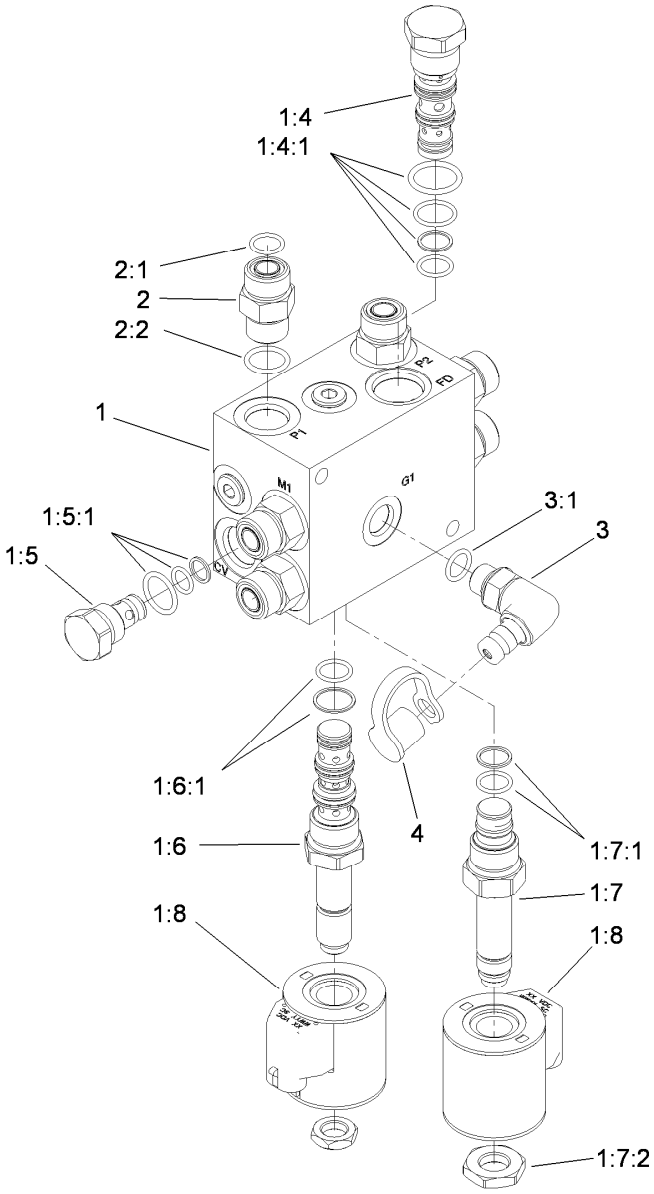

Fan Drive Manifold Assembly No. 117-2395

Ref.	Part Number	Qty.	Description
1		1	Fan Drive Manifold ASM ●
1:4	115-3024	1	Valve-Flow Divider/Combiner
1:4:1	115-3025	1	Seal Kit
1:5	105-9321	1	Check Valve ASM
1:5:1	105-9156	1	Seal Kit
1:6	115-3023	1	Solenoid Valve ASM
1:6:1	110-8908	1	Spool Valve Seal Kit
1:7	115-3022	1	Relief-Proportional
1:7:1	110-6316	1	Seal Kit
1:7:2	119-7715	1	Nut-Coil
1:8	110-6344	2	Coil-12V, DC
2	340-4	7	Fitting-Straight
2:1	237-30	1	O-Ring
2:2	237-79	1	O-Ring
3	115-9148	1	Fitting-Elbow-90
3:1	237-42	1	O-Ring
4	354-79	1	Cap-Dust

● Not serviced separately

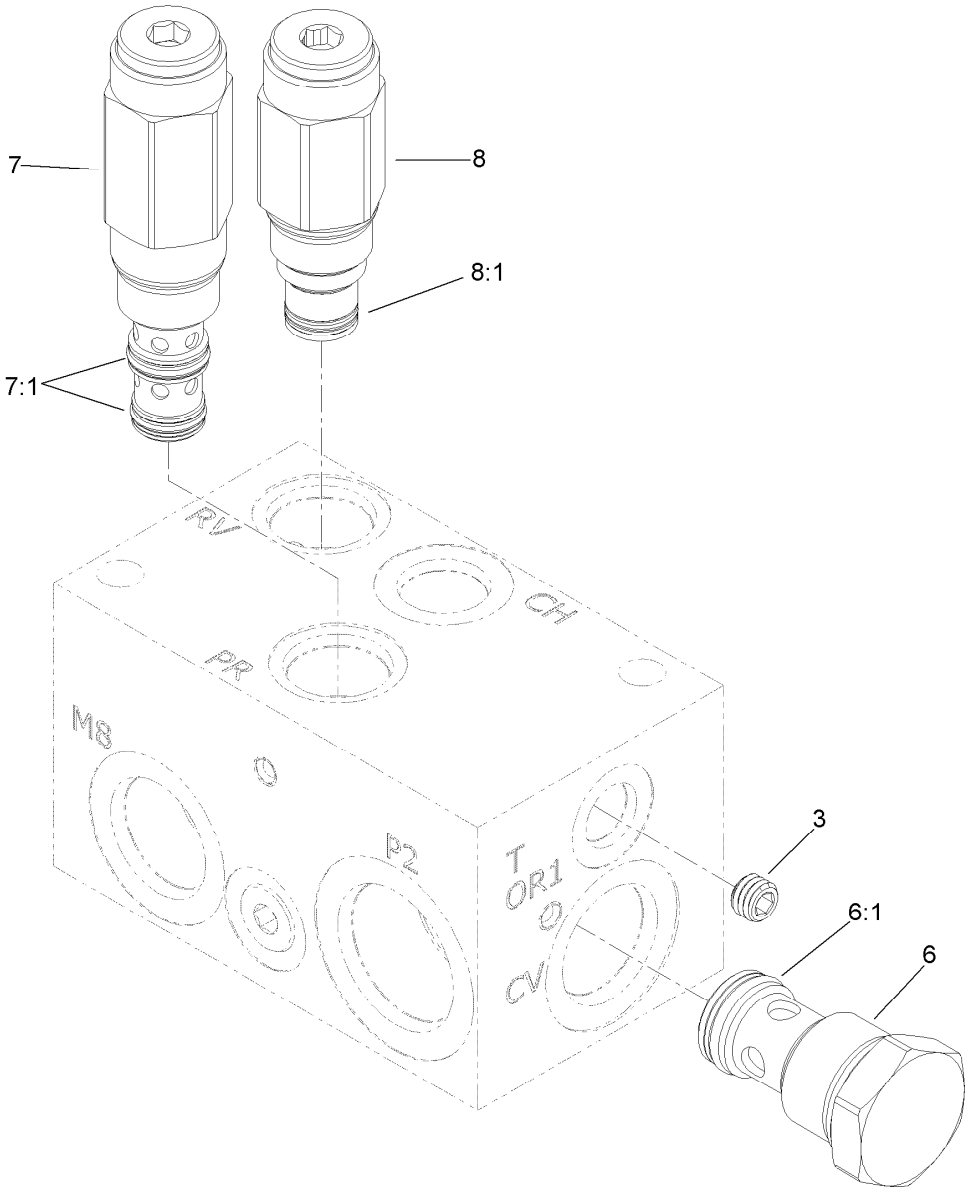

Rear Traction Manifold Assembly No. 121-3078

Ref.	*Part Number*	*Qty.*	*Description*
3	110-0495	1	Plug-Orifice (0.050 Inch)
6	125-4328	1	Valve-Check
6:1	125-4336	1	Seal Kit
7	125-7567	1	Valve-Pressure Reducing
7:1	125-4334	1	Seal Kit
8	125-7566	1	Valve-Relief
8:1	110-6316	1	Seal Kit

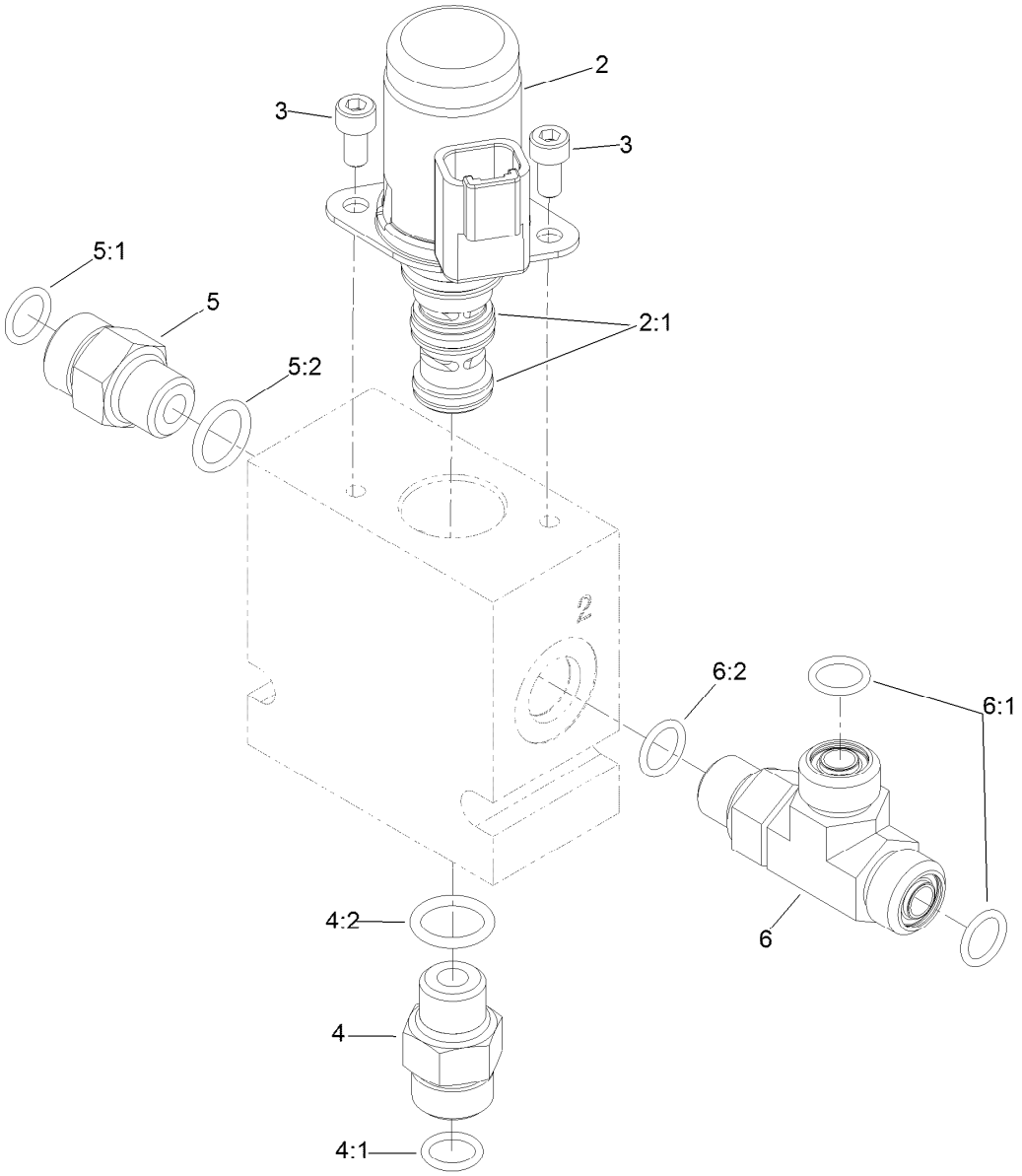

3 Way Manifold Valve Assembly No. 121-3077

Ref.	*Part Number*	*Qty.*	*Description*
2	125-7554	1	Valve-Solenoid
2:1	125-7561	1	Seal Kit
3	115-8733	2	Screw-HSH
4	340-2	1	Fitting-Straight
4:1	237-22	1	O-Ring
4:2	237-42	1	O-Ring
5	92-9258	1	Adapter-Check
5:1	237-22	1	O-Ring
5:2	237-42	1	O-Ring
6	340-86	1	Fitting-Tee
6:1	237-22	2	O-Ring
6:2	237-42	1	O-Ring

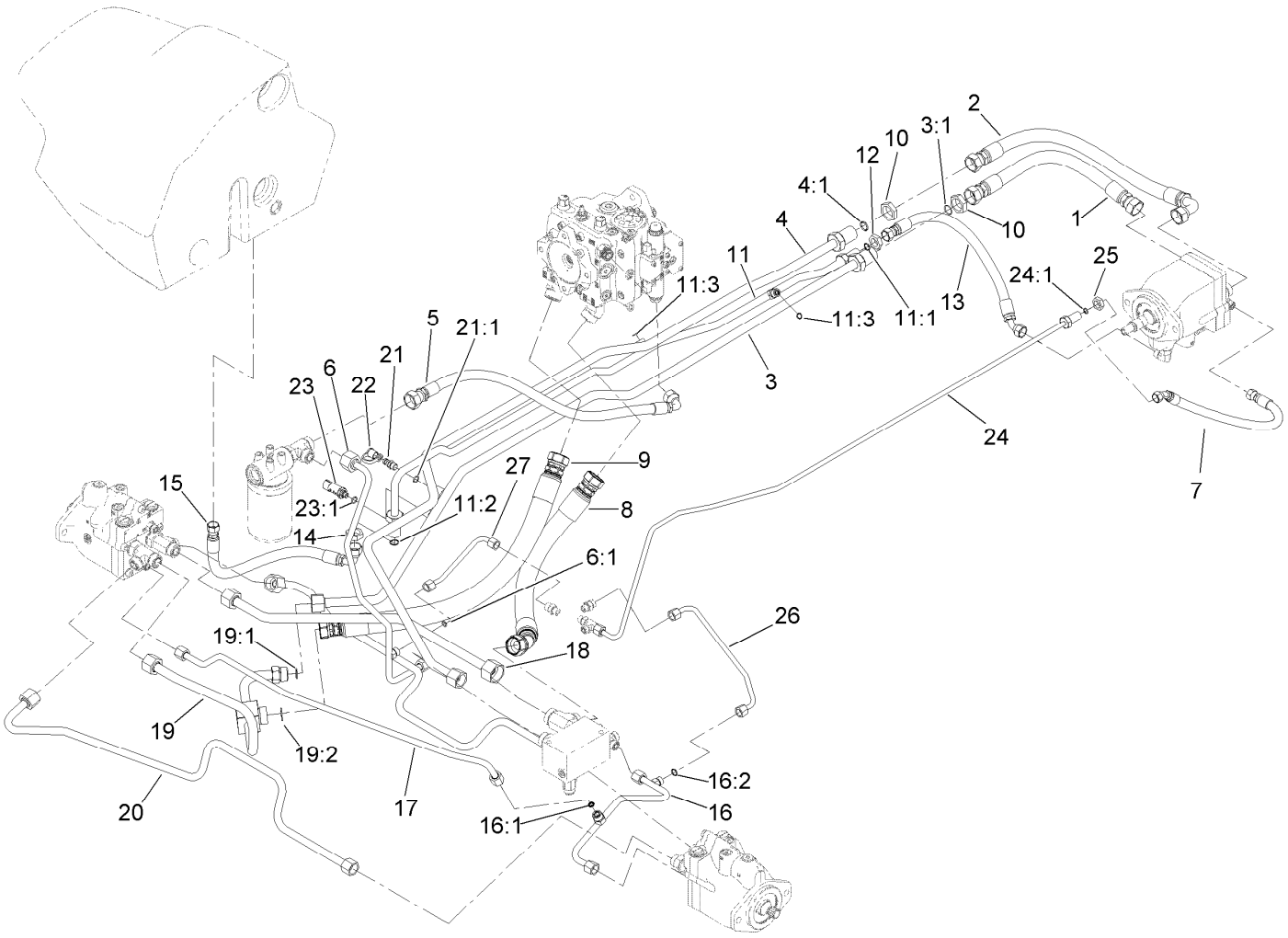

Hydraulic Traction Circuit Assembly

Ref.	Part Number	Qty.	Description
1	120-8053	1	Hose ASM
2	104-3789	1	Filter Hose ASM
3	120-8079	1	Tube ASM
3:1	237-58	1	O-Ring
4	120-8080	1	Tube ASM
4:1	237-58	1	O-Ring
5	121-3094	1	Hose ASM
6	120-8047	1	Tube ASM
6:1	237-22	1	O-Ring
7	92-7595	1	Hose-HYD
8	120-8098	1	Hose ASM
9	125-4571	1	Hose ASM
10	340-126	2	Nut-Bulkhead
11	120-8025	1	Tube ASM
11:1	237-30	1	O-Ring
11:2	237-65	1	O-Ring
11:3	237-22	2	O-Ring
12	340-127	1	Nut-Bulkhead
13	92-2406	1	Hose-HYD
14	340-74	1	Nut-Lock, Bulkhead

Ref.	Part Number	Qty.	Description
15	120-8097	1	Hose ASM
16	121-3055	1	Tube ASM
16:1	237-30	1	O-Ring
16:2	237-22	1	O-Ring
17	121-3056	1	Tube ASM
18	121-3123	1	Tube ASM
19	125-4569	1	Tube ASM
19:1	237-58	1	O-Ring
19:2	340-65	1	O-Ring
20	121-3054	2	Tube ASM
21	59-7410	1	Fitting-Diagnostic
21:1	237-42	1	O-Ring
22	354-79	1	Cap-Dust
23	119-0011	1	Pressure Transducer ASM
23:1	237-78	1	O-Ring
24	120-8052	1	Tube ASM
24:1	237-22	1	O-Ring
25	340-70	1	Nut-Lock
26	125-4563	1	Tube ASM
27	125-4566	1	Tube ASM

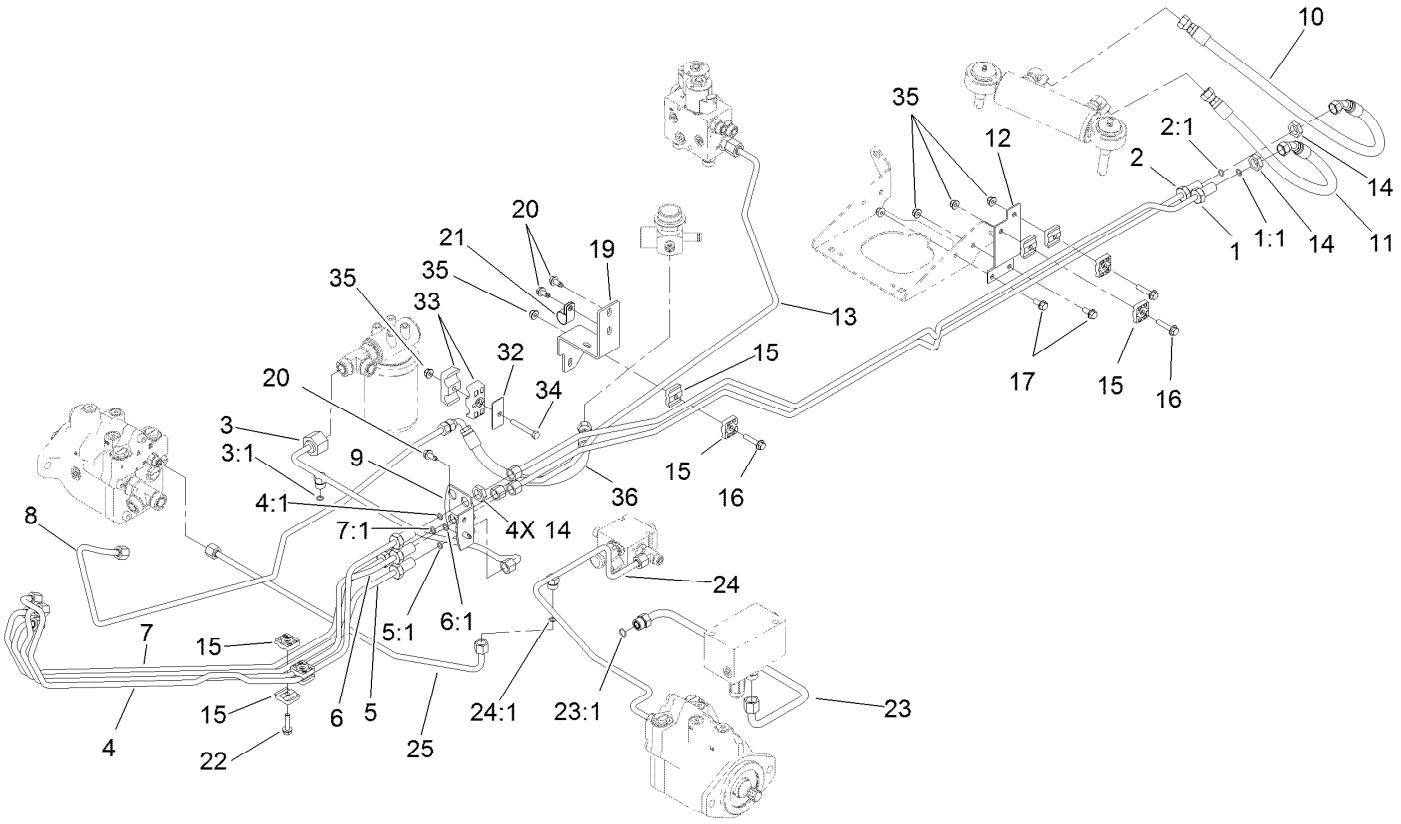

Hydraulic Steering Circuit Assembly

Ref.	Part Number	Qty.	Description
1	120-8056	1	Tube ASM
1:1	237-22	1	O-Ring
2	120-8055	1	Tube ASM
2:1	237-22	1	O-Ring
3	115-4412	1	Tube ASM
3:1	237-22	1	O-Ring
4	115-4408	1	Tube ASM
4:1	237-22	1	O-Ring
5	115-4406	1	Tube ASM
5:1	237-22	1	O-Ring
6	115-4409	1	Tube ASM
6:1	237-22	1	O-Ring
7	115-4405	1	Tube ASM
7:1	237-22	1	O-Ring
8	125-4581	1	Tube ASM
9	92-7606-03	1	Bracket-Bulkhead
10	125-4560	1	Hose ASM
11	92-7539	1	Hose-HYD
12	105-3873-03	1	Bracket-Mount, Clamp

Ref.	Part Number	Qty.	Description
13	120-8057	1	Tube ASM
14	340-70	6	Nut-Lock
15	56-7973	10	Clamp-Tube
16	115-1794	3	Screw-HHF
17	3234-5	2	Screw-HHF
19	105-3993-03	1	Bracket-Support, Tube
20	32104-32	4	Screw-HWH
21	2412-81	1	Clamp-R
22	119-4036	2	Screw-HHF
23	125-4570	1	Tube ASM
23:1	237-30	1	O-Ring
24	121-3064	1	Tube ASM
24:1	237-22	1	O-Ring
25	121-3063	1	Tube ASM
32	69-9761	1	Plate-Cover
33	94-8105	2	Clamp-Tube
34	322-11	1	Screw-HH
35	104-8300	6	Nut-HF, NI
36	92-5694	1	Hose-Hydraulic

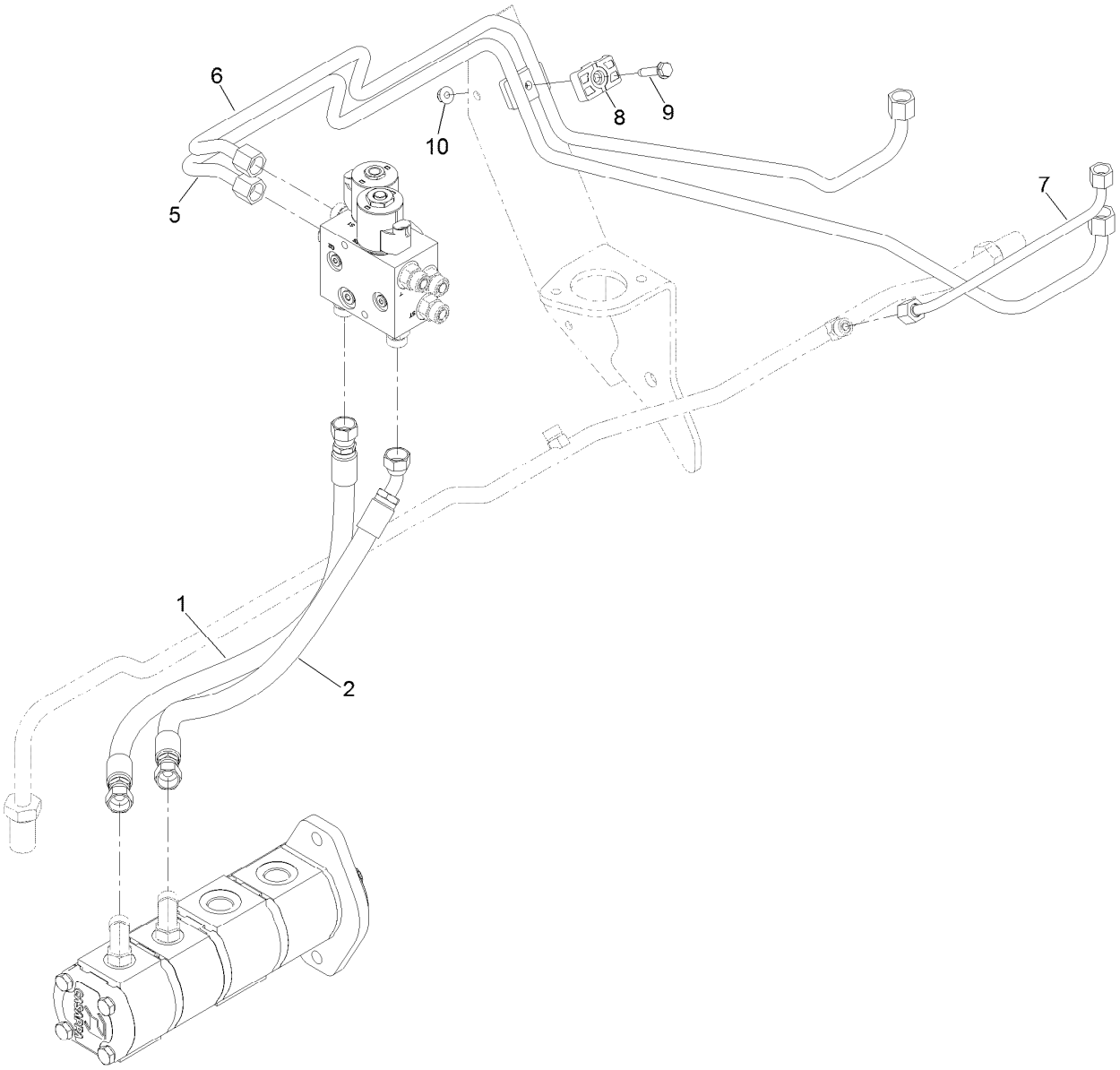

Hydraulic Lift Circuit Assembly

Ref.	*Part Number*	*Qty.*	*Description*
1	125-4558	1	Hose ASM
2	95-8829	1	Hose ASM
5	125-4601	1	Tube ASM
6	125-4599	1	Tube ASM
7	125-4602	1	Tube ASM
8	56-7976	2	Clamp-Tube
9	32144-57	1	Screw
10	104-8300	1	Nut-HF, NI

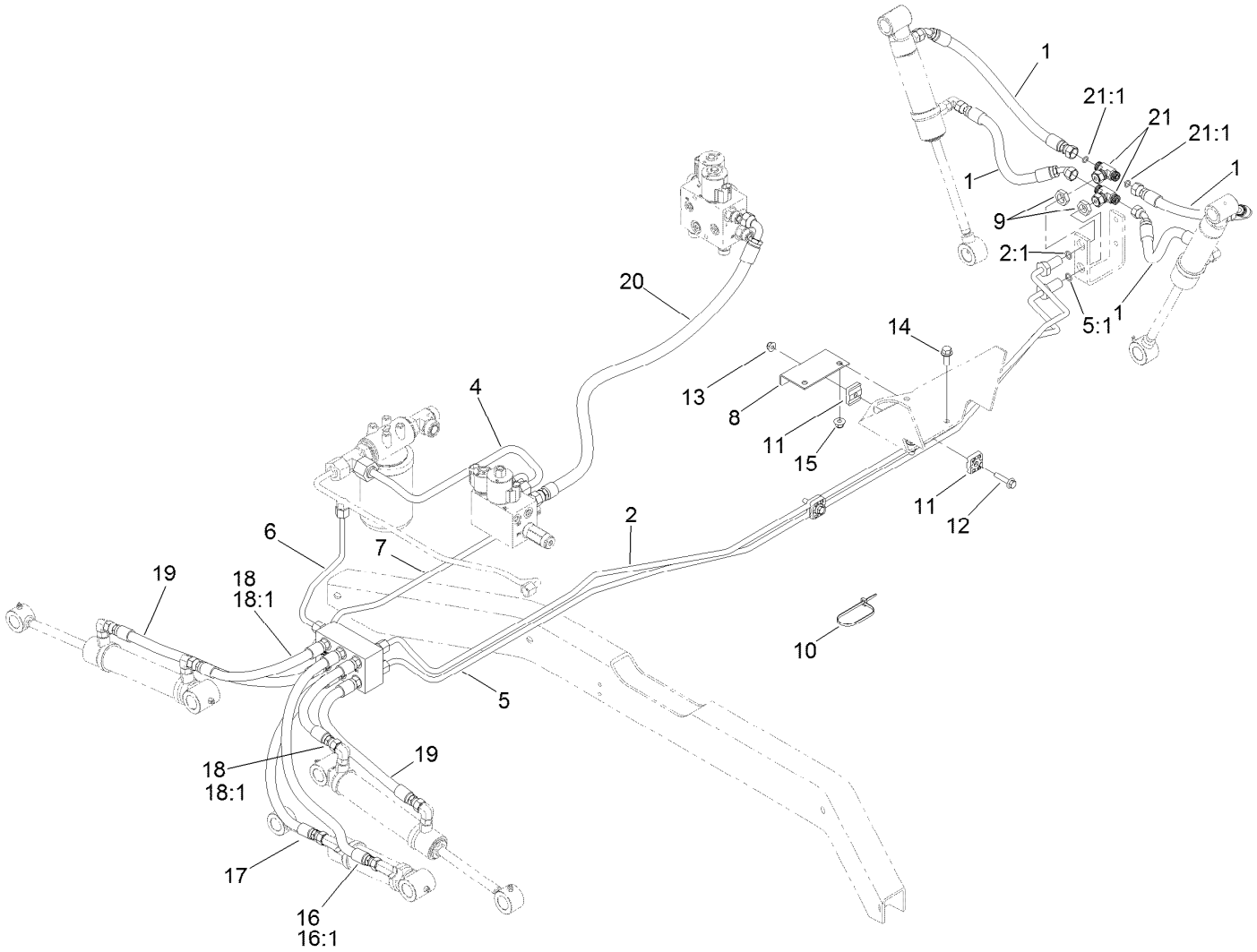

Deck Lift Hydraulic Lift Circuit Assembly

Ref.	Part Number	Qty.	Description
1	105-9238	4	Hose-HYD
2	121-3103	1	Tube ASM
2:1	237-22	1	O-Ring
4	114-8143	1	Tube-HYD
5	121-3104	1	Tube ASM
5:1	237-22	1	O-Ring
6	115-9121	1	Tube-HYD
7	114-8142	1	Tube-HYD
8	105-3990-03	1	Bracket-Support, Tube
9	340-70	2	Nut-Lock
10	3334-945	1	Tie-Cable
11	56-7973	4	Clamp-Tube
12	115-1794	2	Screw-HHF

Ref.	Part Number	Qty.	Description
13	104-8300	3	Nut-HF, NI
14	3234-11	2	Screw-HHF
15	104-8301	1	Nut-HF, NI
16	104-5511	1	Hose -HYD
16:1	237-42	1	O-Ring
17	100-5629	1	Hose ASM
18	104-5512	2	Hose-HYD
18:1	237-42	1	O-Ring
19	99-3579	2	Hose-HYD
20	131-7758	1	Hose ASM
21	340-166	2	Fitting-Tee
21:1	237-22	2	O-Ring

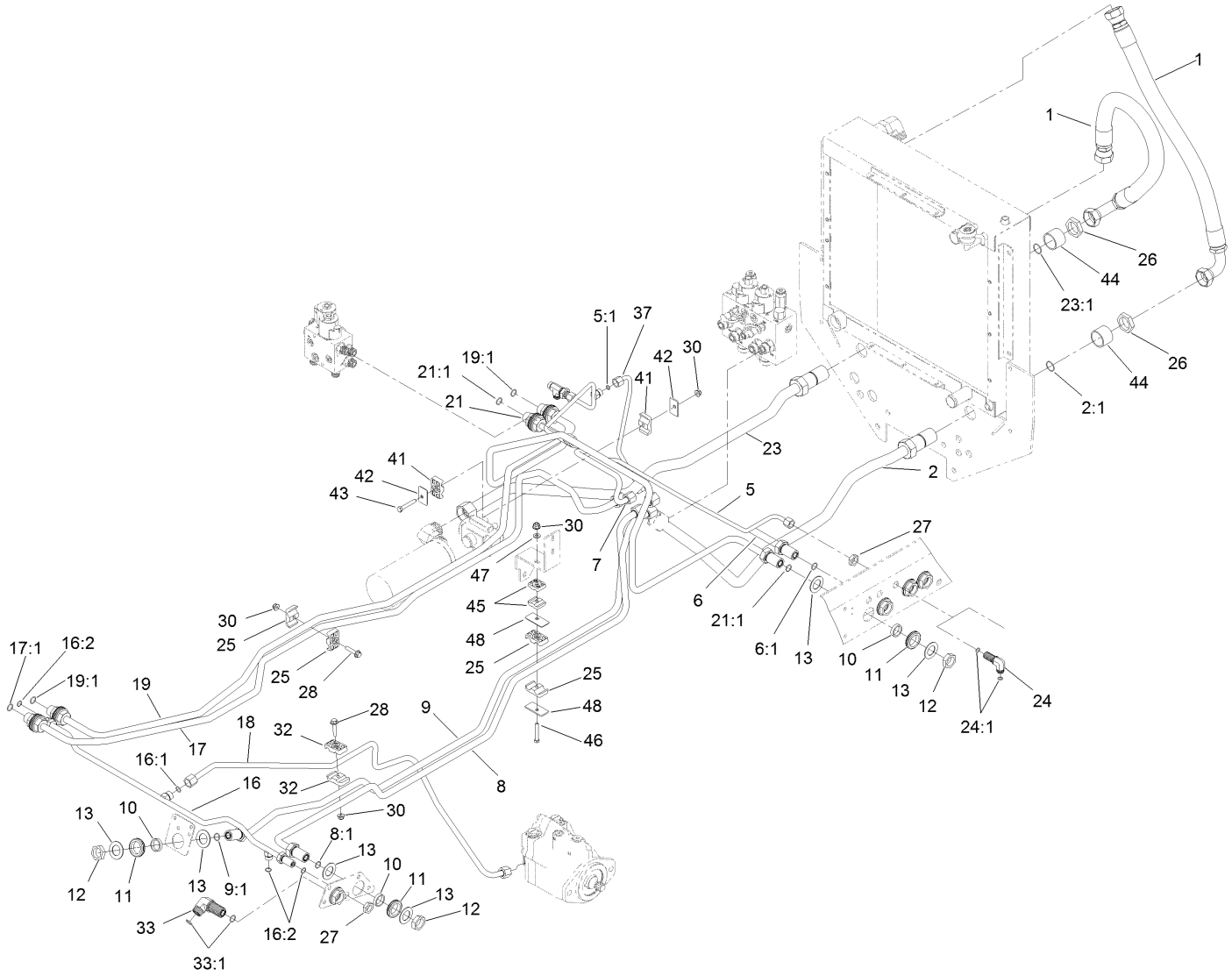

Hydraulic Mow Circuit Assembly

Ref.	Part Number	Qty.	Description
1	108-1689	2	Hose-HYD
2	125-4574	1	Tube ASM
2:1	340-65	1	O-Ring
5	121-3114	1	Tube ASM
5:1	237-22	1	O-Ring
6	125-4557	1	Tube ASM
6:1	237-65	1	O-Ring
7	115-4398	1	Tube-HYD
8	115-4371	1	Tube-HYD
8:1	237-65	1	O-Ring
9	115-4370	1	Tube-HYD
9:1	237-65	1	O-Ring
10	125-1984	9	Spacer
11	240-3	9	Grommet-Rubber
12	340-74	9	Nut-Lock, Bulkhead
13	69-9010	18	Washer
16	120-8081	1	Tube ASM
16:1	237-30	1	O-Ring
16:2	237-22	3	O-Ring
17	125-4556	1	Tube ASM
17:1	237-65	1	O-Ring

Ref.	Part Number	Qty.	Description
18	120-8082	1	Tube ASM
19	105-3901	1	Tube ASM
19:1	237-65	2	O-Ring
21	121-3113	1	Tube ASM
21:1	237-65	2	O-Ring
23	125-4573	1	Tube ASM
23:1	340-65	1	O-Ring
24	340-154	2	Union-Bulkhead
24:1	237-22	2	O-Ring
25	56-7971	4	Clamp-Tube
26	340-128	2	Nut-Bulkhead
27	340-70	4	Nut-Lock
28	115-1794	2	Screw-HHF
30	104-8300	4	Nut-HF, NI
32	56-7972	2	Clamp-Tube
33	340-72	1	Fitting-Bulkhead, 90 DEG
33:1	237-65	2	O-Ring
37	121-3115	1	Tube ASM
41	56-7977	2	Clamp-Tube
42	69-9760	2	Plate-Cover
43	322-10	1	Screw-HH

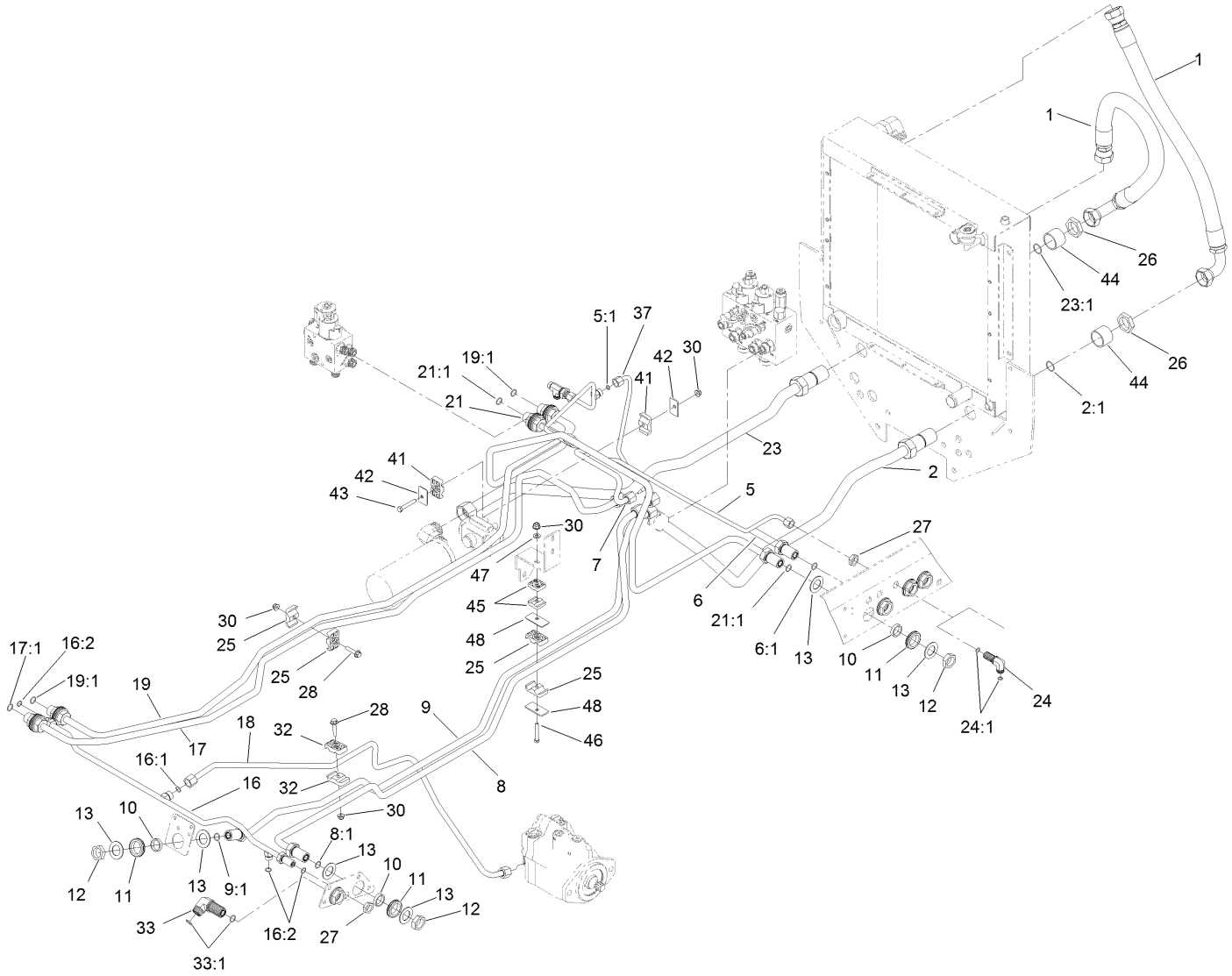

Hydraulic Mow Circuit Assembly (continued)

Ref.	Part Number	Qty.	Description
44	125-4577	2	Spacer
45	56-7973	2	Clamp-Tube
46	322-14	1	Screw-HH
47	3256-23	1	Washer-Plain
48	69-9761	2	Plate-Cover

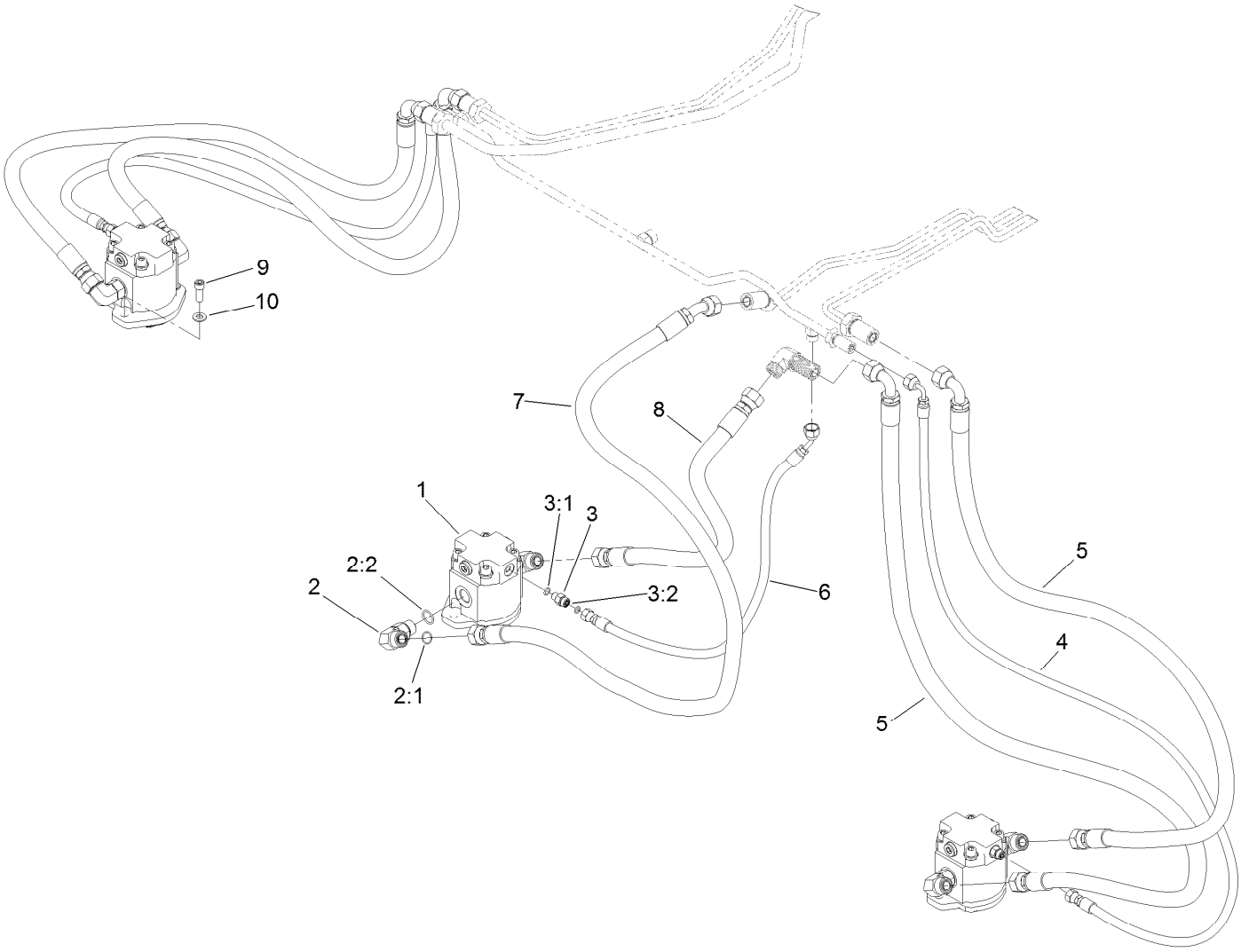

Deck No. 1, 4 and 5 Hydraulic Assembly

Ref.	*Part Number*	*Qty.*	*Description*
1	117-5141	3	HYD Motor ASM
2	340-17	6	Fitting-Elbow, 90 DEG
2:1	237-65	1	O-Ring
2:2	237-80	1	O-Ring
3	340-92	3	Fitting-Straight
3:1	237-78	1	O-Ring
3:2	237-21	1	O-Ring
4	104-5500	2	Hose-HYD
5	104-5501	4	Hose-HYD
6	104-5502	1	Hose-HYD
7	104-5504	1	Hose-HYD
8	104-5505	1	Hose-HYD
9	3274-7	6	Screw-HSH
10	3256-24	6	Washer-Plain

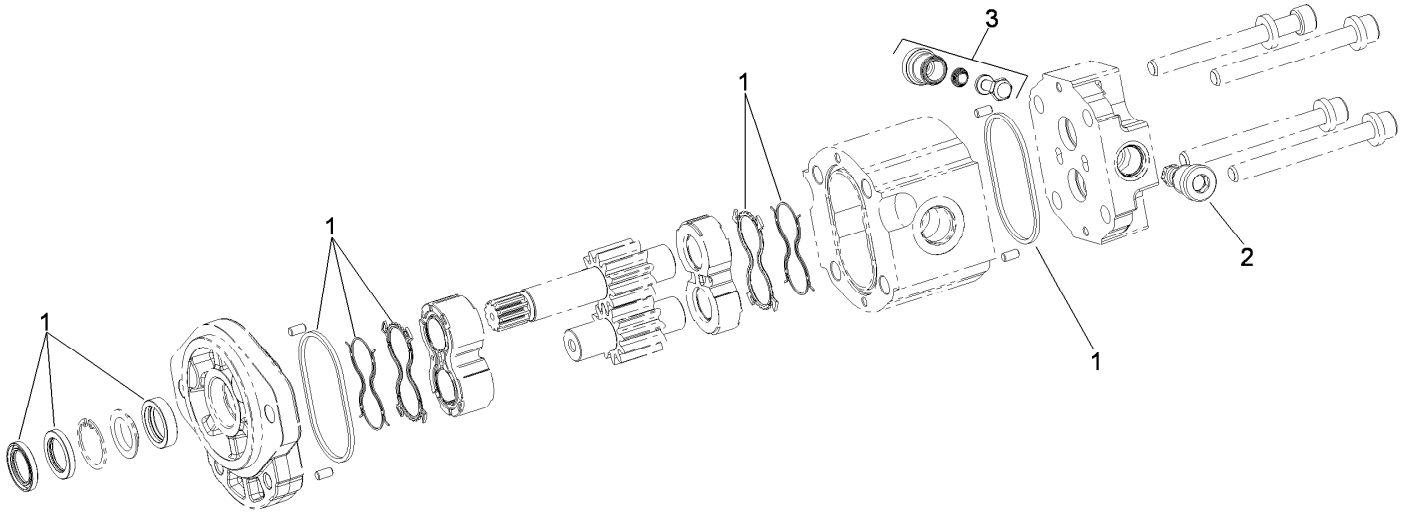

Gear Motor Assembly No. 117-5141

Ref.	*Part Number*	*Qty.*	*Description*
1	117-0235	1	Seal Kit
2	107-7820	1	Valve-Relief
3	107-7821	1	Valve-Anticavitation

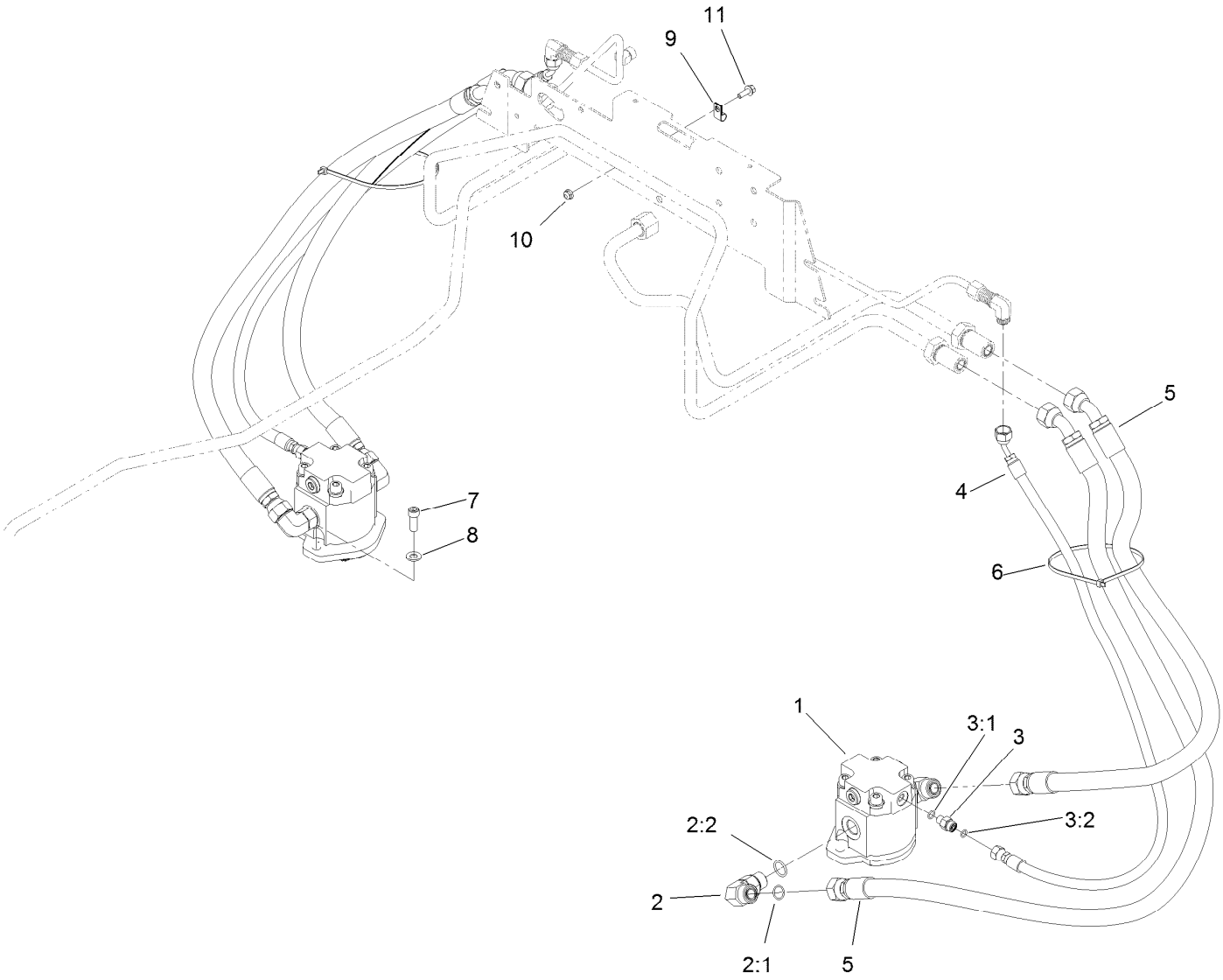

Deck No. 2 and 3 Hydraulic Assembly

Ref.	*Part Number*	*Qty.*	*Description*
1	117-5141	2	HYD Motor ASM
2	340-17	4	Fitting-Elbow, 90 DEG
2:1	237-65	1	O-Ring
2:2	237-80	1	O-Ring
3	340-92	2	Fitting-Straight
3:1	237-78	1	O-Ring
3:2	237-21	1	O-Ring
4	104-5502	2	Hose-HYD
5	104-5505	4	Hose-HYD
6	3290-379	2	Tie-Cable
7	3274-7	4	Screw-HSH
8	3256-24	4	Washer-Plain
9	2412-89	1	Clamp-R
10	104-7201	1	Nut-HF, NI
11	3234-4	1	Screw-HHF

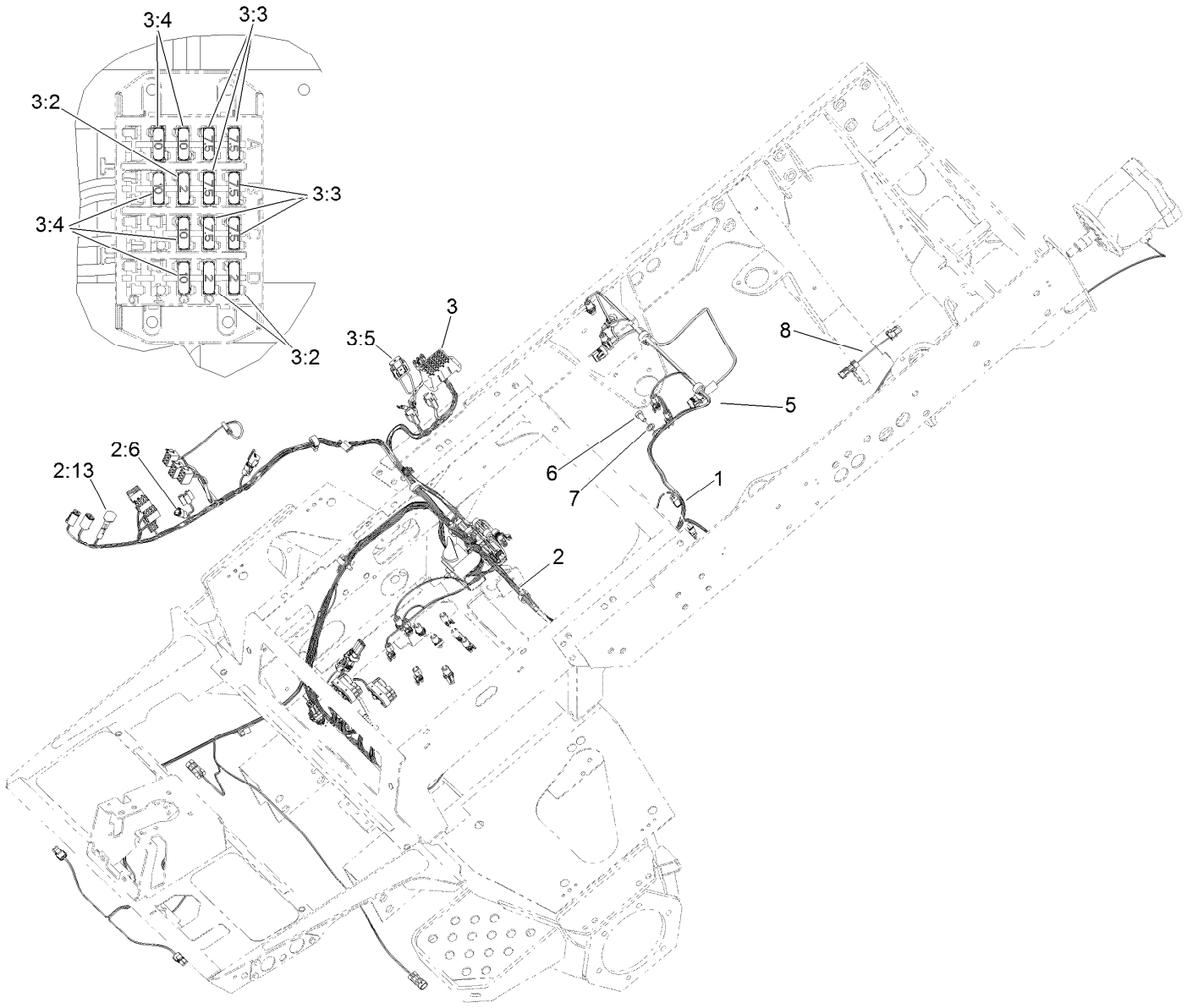

Main Wire Harness Assembly

Ref.	*Part Number*	*Qty.*	*Description*
1	120-6359	1	Harness-Wire, Main
2	120-6358	1	Harness-Wire
2:6	32180-043	1	Resistor-120 Ohm
2:13	104-4022	1	Resistor-75 Ohm
3	121-8857	1	Harness-Wire, Power Center
3:2	121-8861	3	Fuse-Mini Blade, 2 Amp
3:3	121-8865	6	Fuse-Mini Blade, 7.5 Amp
3:4	121-8866	5	Fuse-Mini Blade, 10 Amp
3:5	114-3342	1	Fuse-Maxi, 60 Amp
5	117-2370	1	Harness-Ground
6	33115-020	1	Screw-HH
7	3255-2	1	Washer-Lock, EXT
8	115-1931	1	Harness-Wire, Fuel Pump Adapter

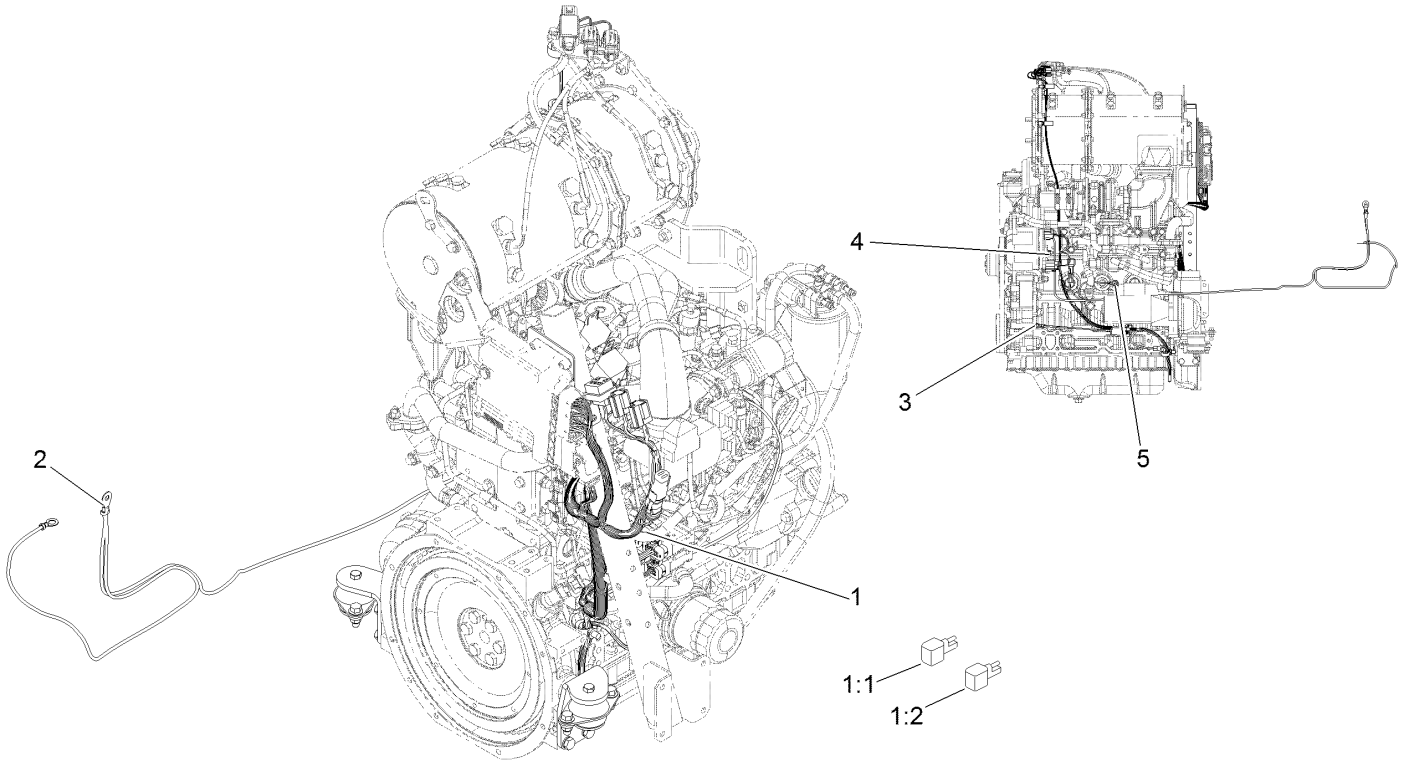

Engine Wire Harness Assembly

Ref.	*Part Number*	*Qty.*	*Description*
1	122-0230	1	Harness-Wire
1:1	100-4918	2	Diode
1:2	121-8891	1	Resistor (1.6K Ohm)
2	115-1930	1	Cable-Battery, Positive
3	108-9470	1	Harness-Wire, Fusible Link
4	33003-00	1	Nut-HF
5	33004-00	1	Nut-HF

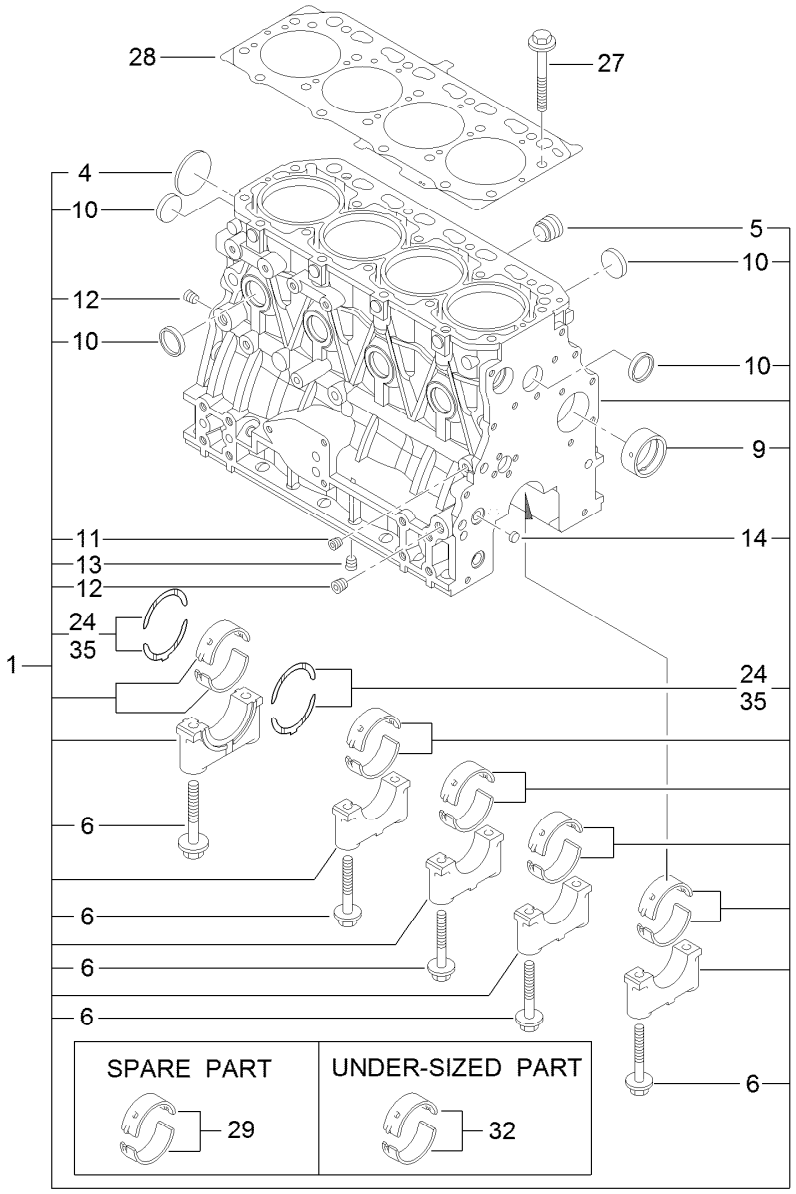

Cylinder Block Assembly

Ref.	Part Number	Qty.	Description
1	127-3127	1	Cylinder Block ASM
4	125-6980	1	Plug
5	125-7170	1	Plug
6	125-7007	10	Bolt
9	125-7108	1	Bushing
10	125-7239	8	Plug
11	125-6969	1	Plug
12	125-6973	2	Plug
13	125-6973	1	Plug
14	125-7237	1	Plug
24	125-7010	2	Metal-Thrust
27	125-7006	18	Bolt
28	127-3126	1	Gasket-Head, Cylinder
29	125-6981	5	Metal-Main
32	125-7009	5	Metal-Main (0.25)
35	125-7011	1	Metal-Thrust (0.25)

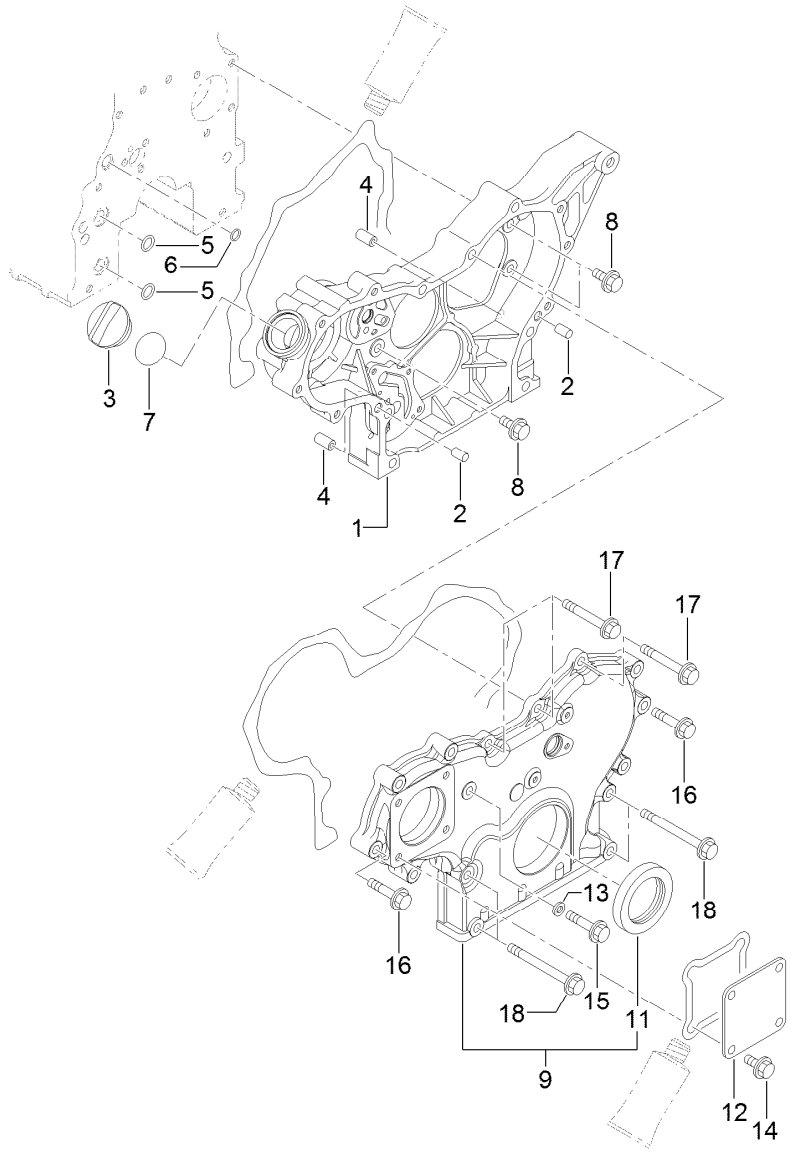

Gear Housing Assembly

Ref.	Part Number	Qty.	Description
1	127-3023	1	Case-Gear
2	125-6995	2	Pin
3	125-6972	1	Cover-Filler
4	125-7107	2	Pipe
5	125-6909	2	O-Ring
6	127-2973	1	O-Ring
7	125-7197	1	O-Ring
8	125-7214	3	Bolt
9	127-3024	1	Gearcase Cover ASM

Ref.	Part Number	Qty.	Description
11	125-6944	1	Seal-Oil
12	125-6977	1	Cover
13	125-7174	1	Washer-Seal
14	125-7214	4	Bolt
15	125-7217	1	Bolt
16	125-7218	7	Bolt
17	125-7222	3	Bolt
18	125-7224	4	Bolt

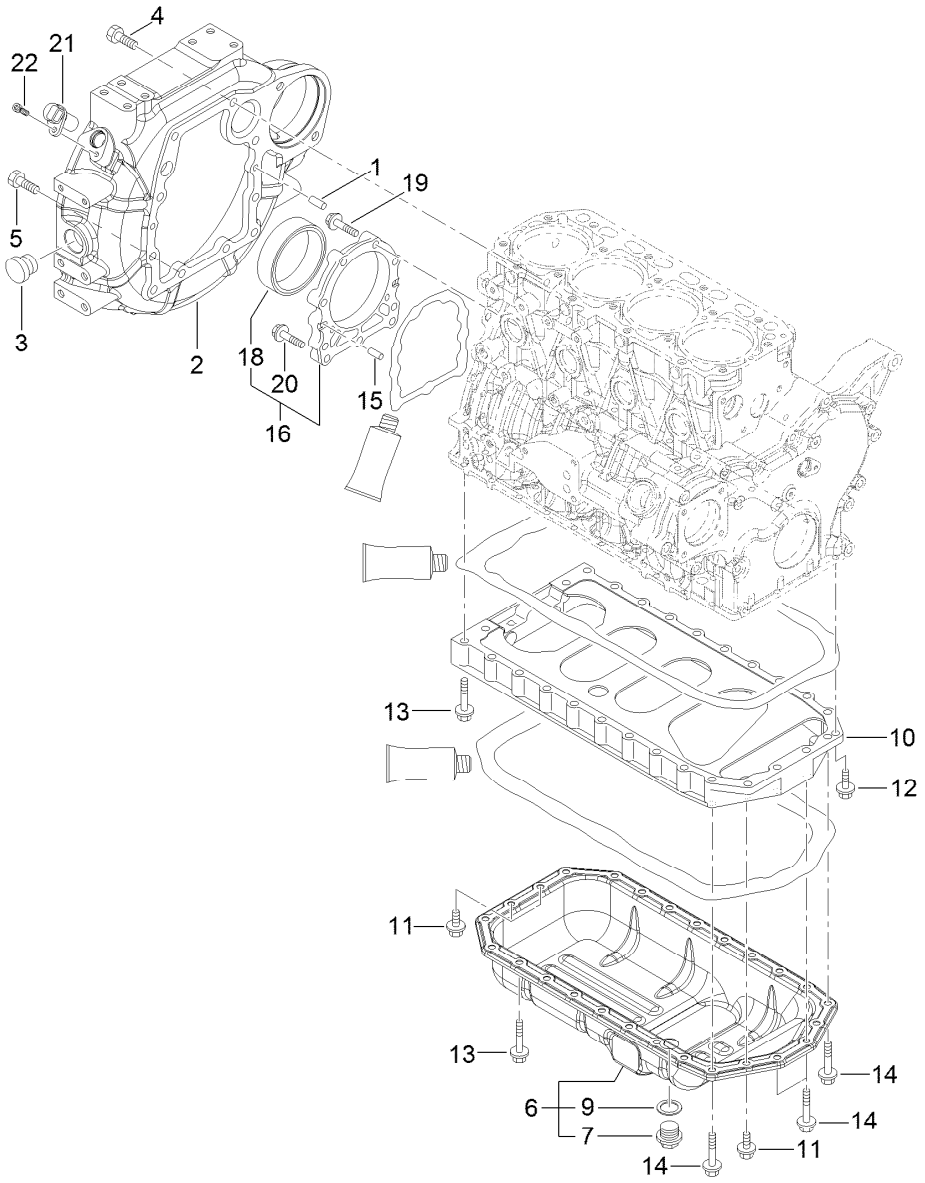

Flywheel Housing and Oil Sump Assembly

Ref.	Part Number	Qty.	Description
1	125-6995	2	Pin
2	127-3025	1	Housing-Flywheel
3	125-6910	1	Cap
4	125-7226	6	Bolt
5	125-7227	4	Bolt
6	125-7241	1	Oil Sump ASM
7	125-6912	1	Plug-Drain
9	125-7177	1	Washer-Seal
10	125-7035	1	Spacer
11	125-7214	4	Bolt

Ref.	Part Number	Qty.	Description
12	125-7215	2	Bolt
13	125-7219	20	Bolt
14	125-7220	4	Bolt
15	125-6995	2	Pin
16	125-6996	1	Case ASM
18	125-7106	1	Seal-Oil
19	125-7045	6	Bolt
20	125-7217	3	Bolt
21	127-3062	1	Sensor-Rev, Flywheel
22	127-3184	1	Bolt

Cylinder Head and Cover Assembly

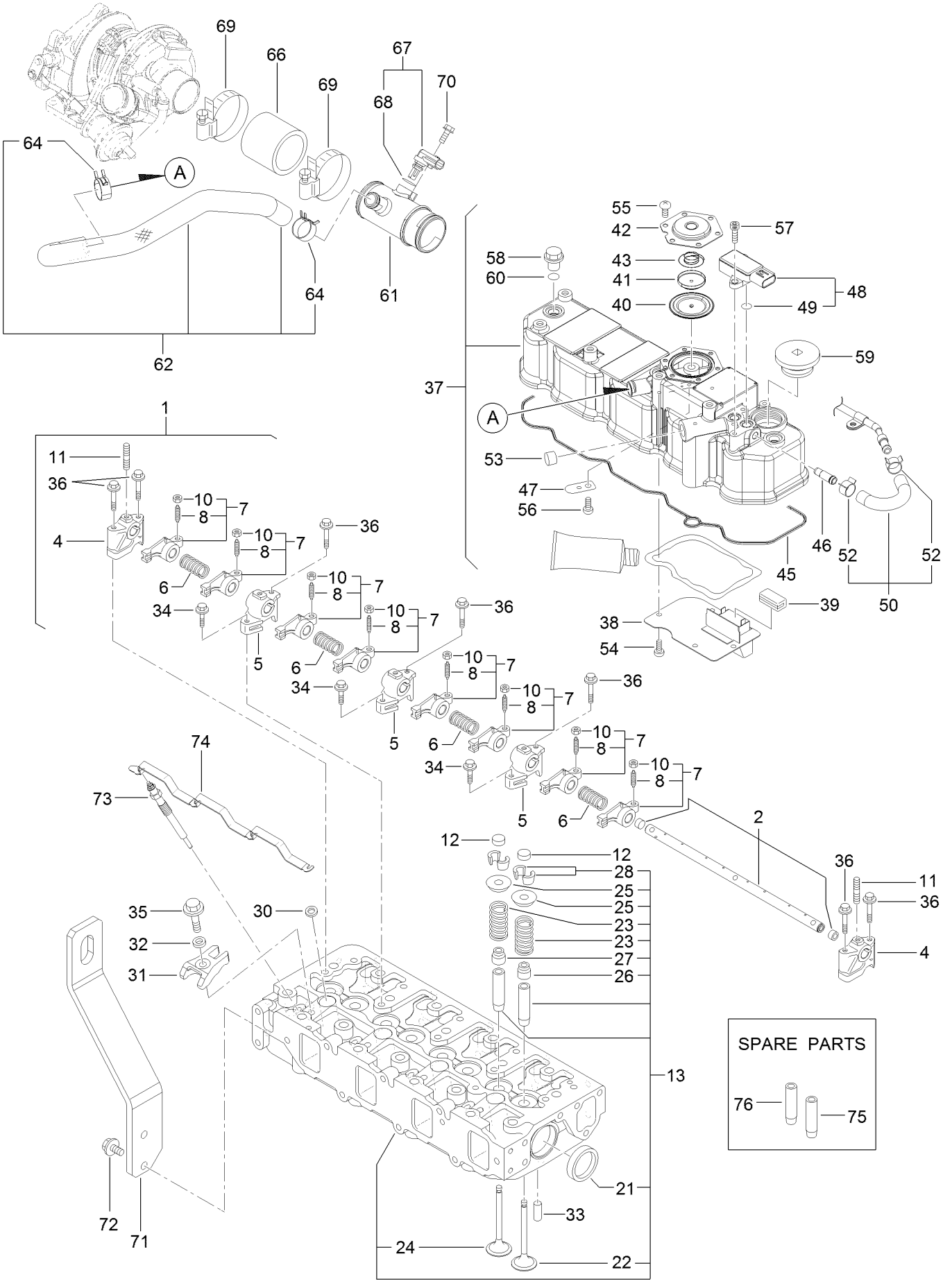

Cylinder Head and Cover Assembly (continued)

Ref.	Part Number	Qty.	Description
1	127-3005	1	Shaft ASM
2	127-3006	1	Shaft
4	127-2974	2	Support
5	127-2975	3	Support
6	127-2995	4	Spring
7	127-2989	8	Arm-Rocker
8	125-7013	8	Screw-Adjust, Valve
10	125-7014	8	Nut
11	127-3183	3	Stud
12	127-2996	8	Cap-Valve
13	127-3132	1	Cylinder Head ASM
21	125-7240	2	Plug
22	127-2990	4	Valve
23	127-3012	8	Spring
24	127-2994	4	Valve
25	127-3013	8	Retainer-Spring
26	127-2986	4	Seal-Stem, Valve
27	127-3027	4	Seal-Stem, Valve
28	127-3186	8	Pin-Cotter
30	127-3021	4	Gasket-Injector
31	127-3028	4	Retainer-Injector
32	127-2980	4	Washer-Injector
33	125-7184	2	Pin-Spring
34	125-7215	3	Bolt
35	125-7217	4	Bolt
36	125-7220	7	Bolt
37	127-3131	1	Cylinder Head Cover ASM
38	127-2988	1	Plate
39	125-7012	1	Baffle
40	125-6959	1	Diaphragm
41	125-6960	1	Plate
42	125-6961	1	Plate-Breather
43	125-6962	1	Spring-Diaphragm
45	127-3106	1	Gasket-Cover
46	127-3026	1	Joint
47	125-6994	1	Spring
48	127-3029	1	Sensor-Pressure
49	127-3032	2	O Ring-Sensor, Pressure
50	127-3040	1	Hose ASM
52	127-3041	2	Clip-Hose
53	125-6913	1	Plug
54	125-7186	4	Screw
55	125-7186	6	Screw
56	125-7186	1	Screw
57	127-3184	2	Bolt
58	125-6974	3	Knob
59	127-2978	1	Plug
60	93-0418	3	O-Ring
61	127-3128	1	Joint-Breather
62	127-3129	1	Breather Hose ASM
64	125-7040	2	Clip-Hose
66	127-3133	1	Hose-Intake
67	127-3030	1	Sensor-Temp, Air
68	127-3033	1	O-Ring
69	125-7190	2	Clamp-Hose
70	125-7208	1	Bolt
71	127-3130	1	Lifter-Engine
72	125-7214	2	Bolt
73	127-2991	4	Plug-Glow
74	127-3123	1	Connector-Glow Plug
75	127-2979	4	Guide
76	127-2997	4	Guide-Valve

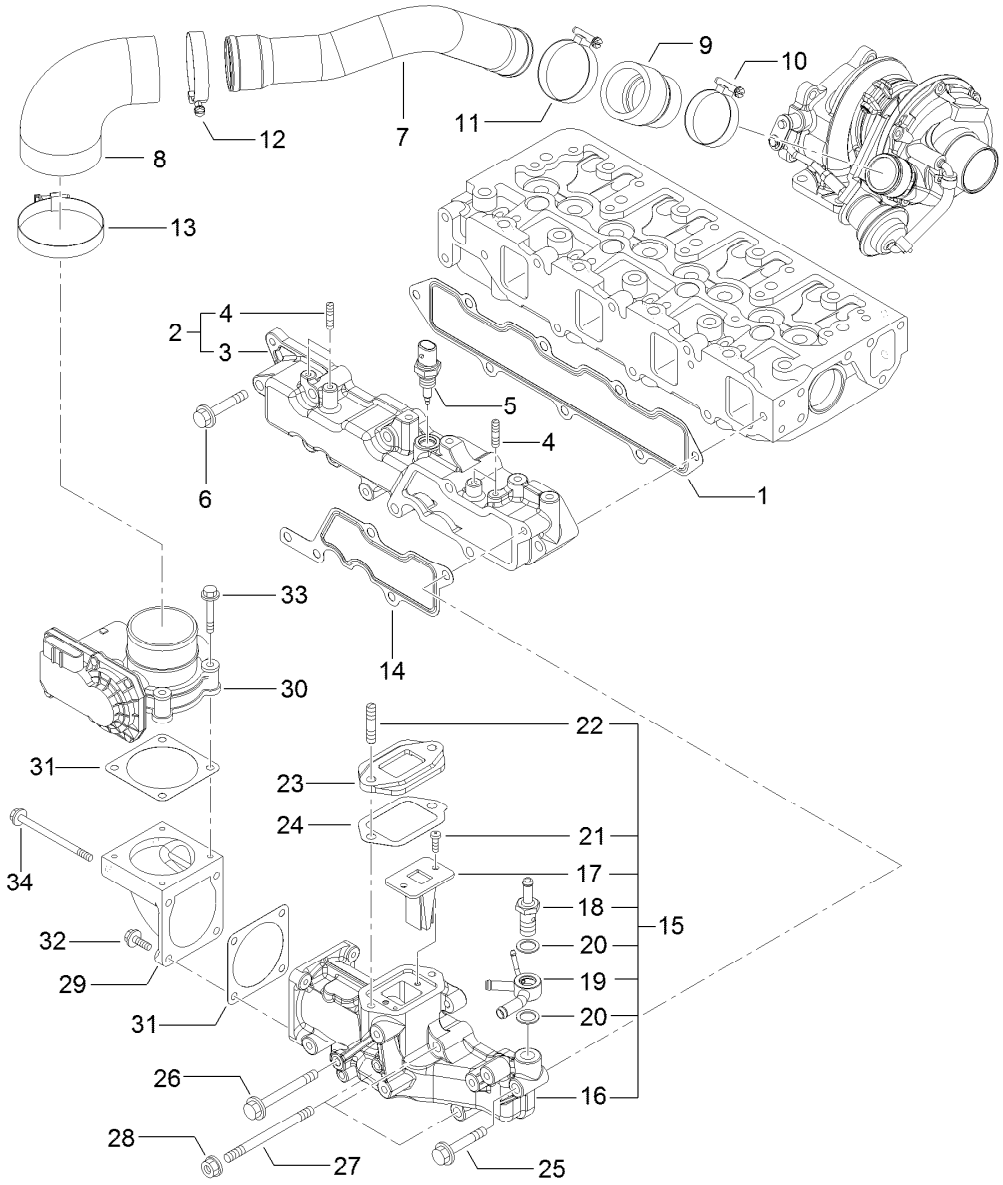

Suction Manifold Assembly

Ref.	Part Number	Qty.	Description
1	127-3107	1	Gasket-Manifold, Intake
2	127-3135	1	Intake Manifold ASM
3	127-3134	1	Manifold-Intake
4	127-3180	4	Stud
5	127-3031	1	Sensor-Temp, Air
6	125-7220	5	Bolt
7	127-3152	1	Duct-Suction
8	127-3096	1	Joint-Rubber
9	127-3153	1	Joint-Rubber
10	125-7189	1	Clamp-Hose
11	127-3170	1	Clamp-Hose
12	125-7190	1	Clamp-Hose
13	127-3171	1	Clamp-Hose
14	127-3034	1	Gasket-Collector
15	127-3093	1	Intake Collector ASM
16	127-3092	1	Collector-Intake
17	127-3139	1	Valve-Reed
18	127-3080	1	Joint-Hose
19	127-3081	1	Joint-Hose
20	127-3166	2	Washer-Seal
21	127-3168	2	Screw
22	127-3181	2	Stud
23	127-3045	1	Spacer-Valve, E G R
24	127-3046	1	Gasket-E G R
25	125-7220	1	Bolt
26	127-3178	1	Bolt
27	127-3182	3	Stud
28	125-7229	3	Nut
29	127-3035	1	Bend-Inlet
30	127-3036	1	Body-Throttle
31	127-3037	2	Gasket-Throttle
32	125-7209	2	Bolt
33	125-7211	4	Bolt
34	127-3177	2	Bolt

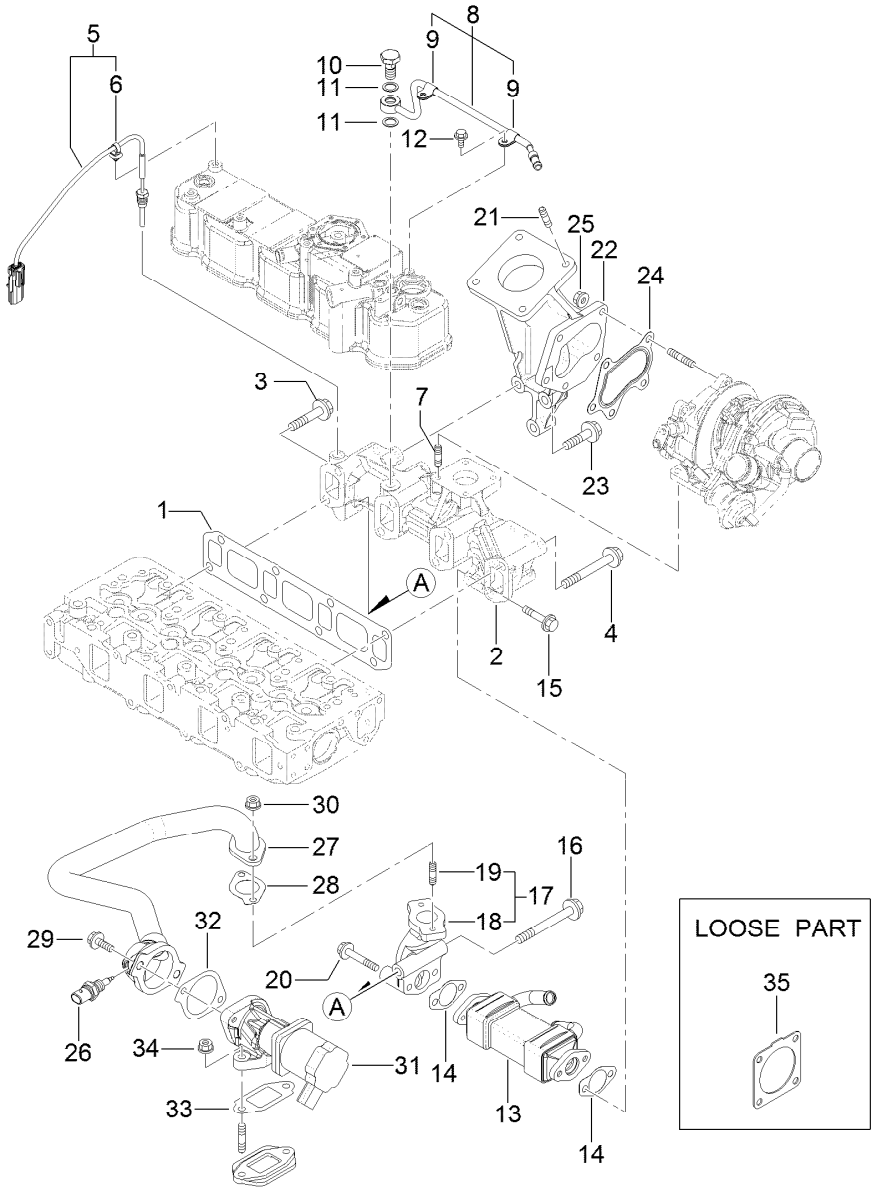

Exhaust Manifold Assembly

Ref.	Part Number	Qty.	Description
1	127-3108	1	Gasket-Manifold, Exhaust
2	127-3136	1	Manifold-Exhaust
3	127-3094	1	Bolt
4	127-3044	7	Bolt-M10
5	127-3140	1	Sensor-Temp, Exhaust
6	127-3087	1	Band-Clip
7	125-7043	4	Stud
8	127-3038	1	Exhaust Pipe ASM
9	127-3173	2	Clamp
10	127-3039	1	Bolt-Joint, Pipe
11	127-3174	2	Gasket
12	125-7206	2	Bolt
13	127-3042	1	Cooler-E G R
14	127-3043	2	Gasket-Cooler, E G R
15	127-2976	2	Bolt
16	127-3022	1	Bolt-Flange
17	127-3048	1	E G R Pipe ASM
18	127-3049	1	Pipe-Out, E G R

Ref.	Part Number	Qty.	Description
19	125-7043	2	Stud
20	125-7220	2	Bolt
21	127-2984	4	Stud
22	127-3137	1	Pipe-Exhaust
23	127-3138	3	Bolt-Flange
24	125-7071	1	Gasket
25	125-7229	5	Nut
26	127-3047	1	Sensor-Gas Temp, E G R
27	127-3109	1	E G R Pipe ASM
28	127-3016	1	Gasket
29	125-7215	2	Bolt
30	125-7229	2	Nut
31	127-3110	1	Valve-E G R
32	127-3050	1	Gasket-Intake Valve, E G R
33	127-3051	1	Gasket-Out Valve, E G R
34	125-7229	2	Nut
35	127-3019	1	Gasket

Diesel Particulate Filter Assembly

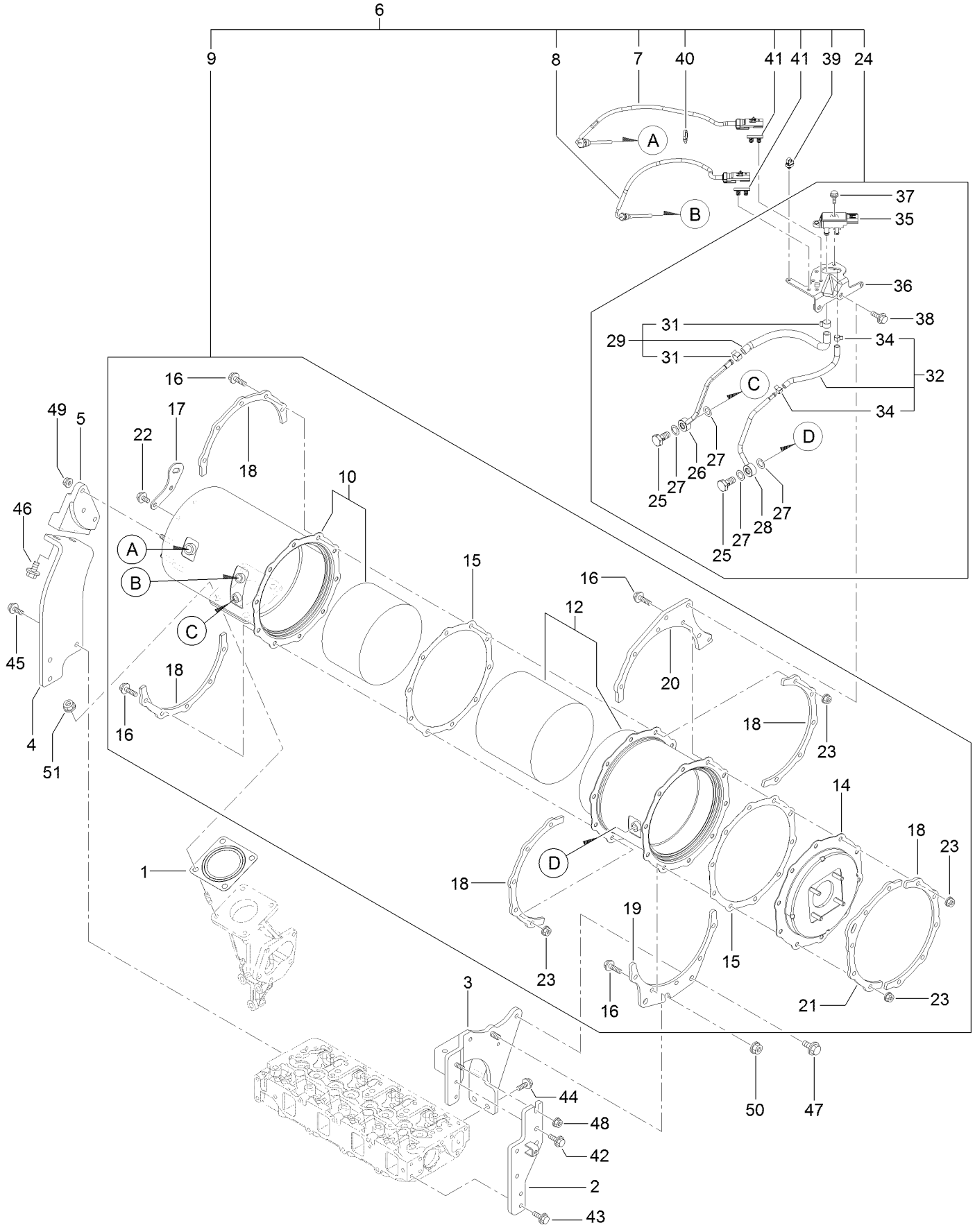

Diesel Particulate Filter Assembly (continued)

Ref.	Part Number	Qty.	Description
1	127-2987	1	Gasket-Silencer
2	127-3095	1	Stay-D P F
3	127-3148	1	Stay- D P F
4	127-3149	1	Stay-D P F
5	127-3150	1	Stay-D P F
6	127-3159	1	D P F Unit
7	127-3111	1	Sensor-Temp, Exhaust
8	127-3112	1	Sensor-Temp, Exhaust
9	127-3157	1	D P F ASM
10	127-3141	1	Case-Doc
12	127-3142	1	Case-Filter, Soot
14	127-3143	1	Flange-Outlet
15	127-3162	2	Gasket-D P F
16	127-3055	20	Bolt
17	127-3144	1	Lifter-D P F
18	127-3145	5	Stiffener-D P F, A
19	127-3146	1	Stiffener-D P F, B
20	127-3158	1	Stiffener-D P F, D
21	127-3147	1	Stiffener-D P F, C
22	125-7213	2	Bolt
23	125-7229	20	Nut
24	127-3163	1	Pressure Sensor Unit
25	127-3039	2	Bolt-Joint, Pipe
26	127-3164	1	Exhaust Pressure Pipe ASM
27	127-3056	4	Gasket-Sensor
28	127-3165	1	Exhaust Pressure Pipe ASM
29	127-3114	1	Exhaust Hose ASM
31	127-3057	2	Clip-Hose
32	127-3059	1	Exhaust Pressure Hose ASM
34	127-3058	2	Clip-Hose
35	127-3060	1	Sensor-Pressure
36	127-3061	1	Bracket-Sensor, Pressure
37	125-7208	2	Bolt
38	125-7595	2	Bolt
39	127-3087	1	Band-Clip
40	127-3124	1	Band
41	127-3088	2	Clip-Connnector
42	125-7595	2	Bolt
43	125-7595	2	Bolt
44	125-7595	2	Bolt
45	125-7595	3	Bolt
46	127-3179	2	Bolt
47	127-3179	2	Bolt
48	125-7229	1	Nut
49	125-7229	3	Nut
50	125-7230	1	Nut
51	125-7230	4	Nut

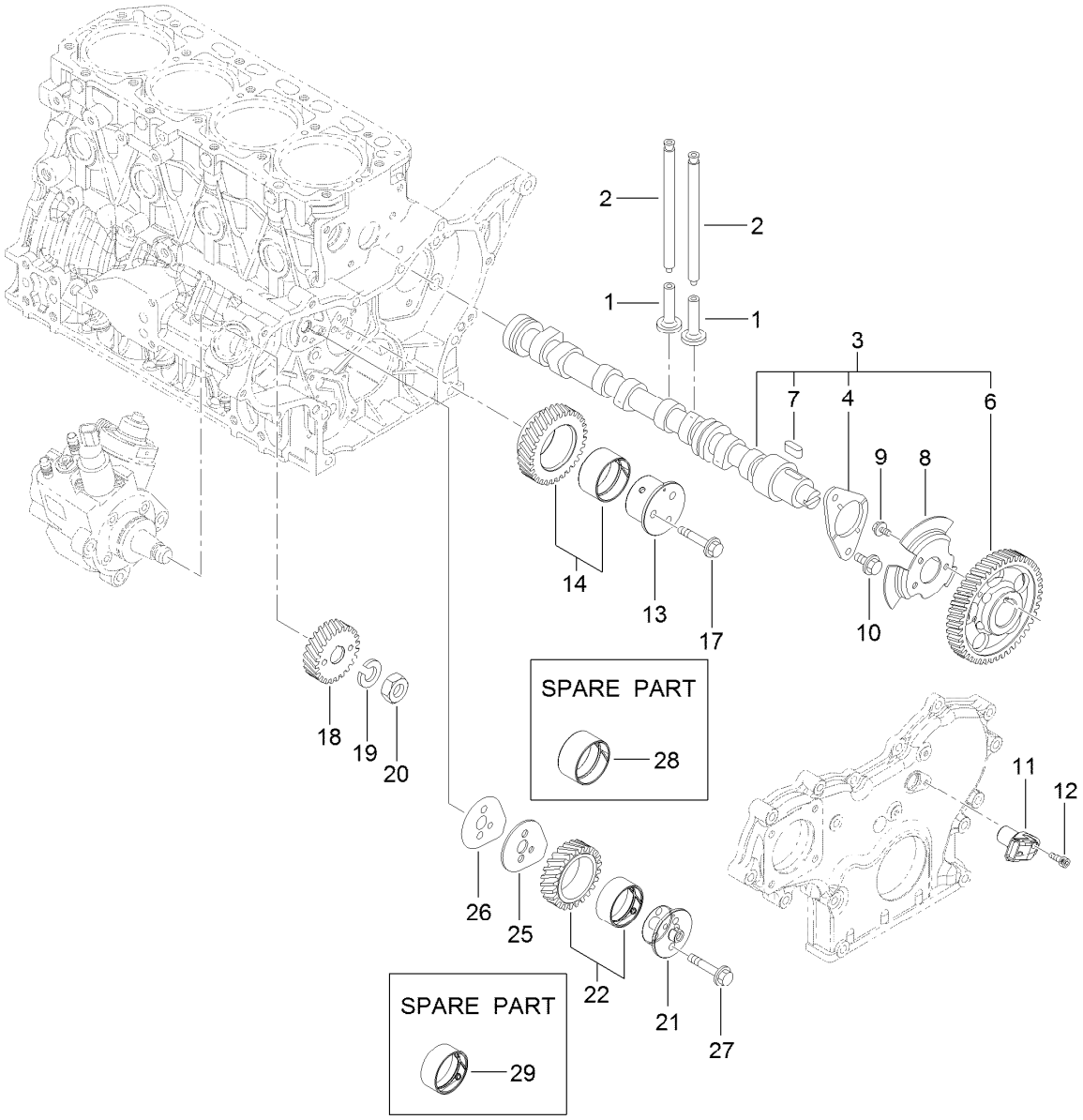

Camshaft and Driving Gear Assembly

Ref.	Part Number	Qty.	Description
1	125-7016	8	Tappet
2	125-7017	8	Rod-Push
3	127-3113	1	Camshaft ASM
4	125-7008	1	Metal-Thrust
6	127-3052	1	Gear-Camshaft
7	125-7185	1	Key
8	127-3053	1	Pulser-Camshaft
9	125-7205	3	Bolt
10	125-7213	2	Bolt
11	127-3054	1	Sensor-Rev, Gear
12	127-3184	1	Bolt
13	127-3063	1	Shaft-Idle, Gear A
14	127-3066	1	Idle Gear A ASM
17	125-7219	3	Bolt
18	127-3070	1	Gear-Pump, Supply
19	127-3167	1	Washer-Spring
20	127-3185	1	Nut-Lock
21	127-3064	1	Shaft-Idle, Gear B
22	127-3067	1	Idle Gear B ASM
25	127-3068	1	Plate-Idle, Shaft
26	127-3069	1	Gasket-Idle, Shaft B
27	125-7218	2	Bolt
28	125-6927	1	Bushing
29	127-3065	1	Bushing

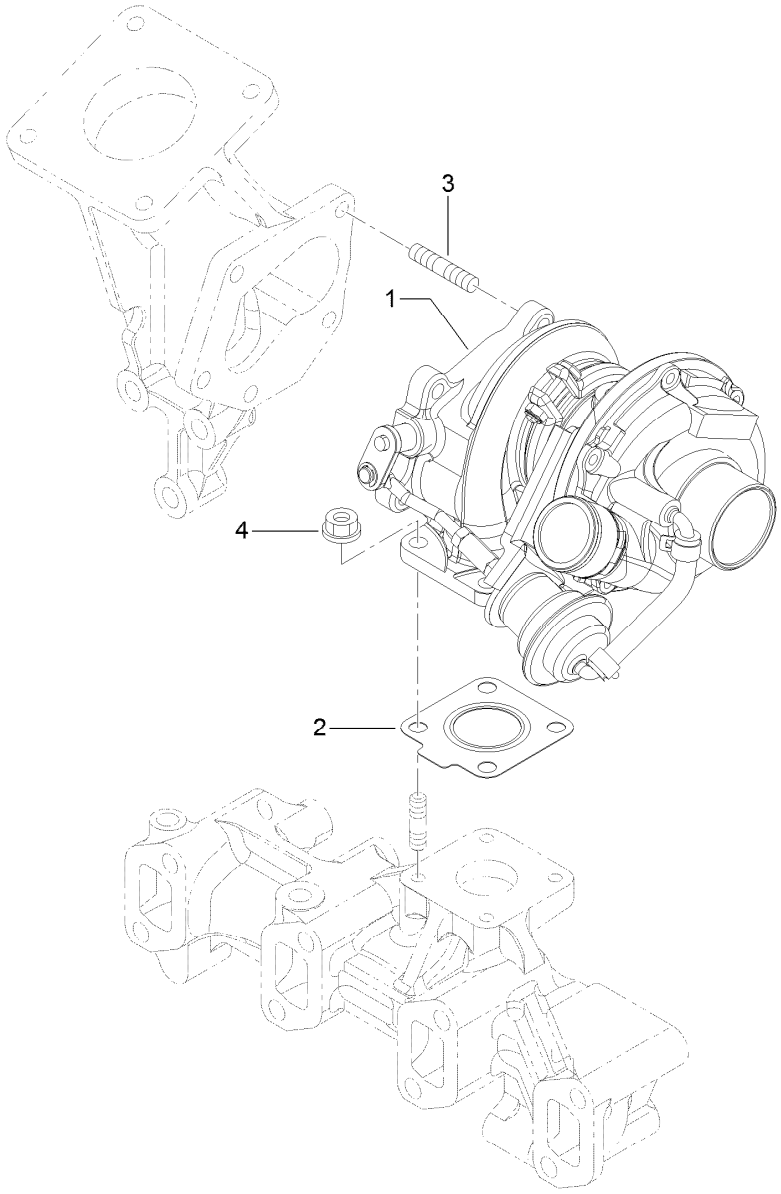

Turbine Assembly

Ref.	*Part Number*	*Qty.*	*Description*
1	127-3151	1	Turbine ASM
2	125-7070	1	Gasket
3	125-6906	5	Stud
4	125-7229	4	Nut

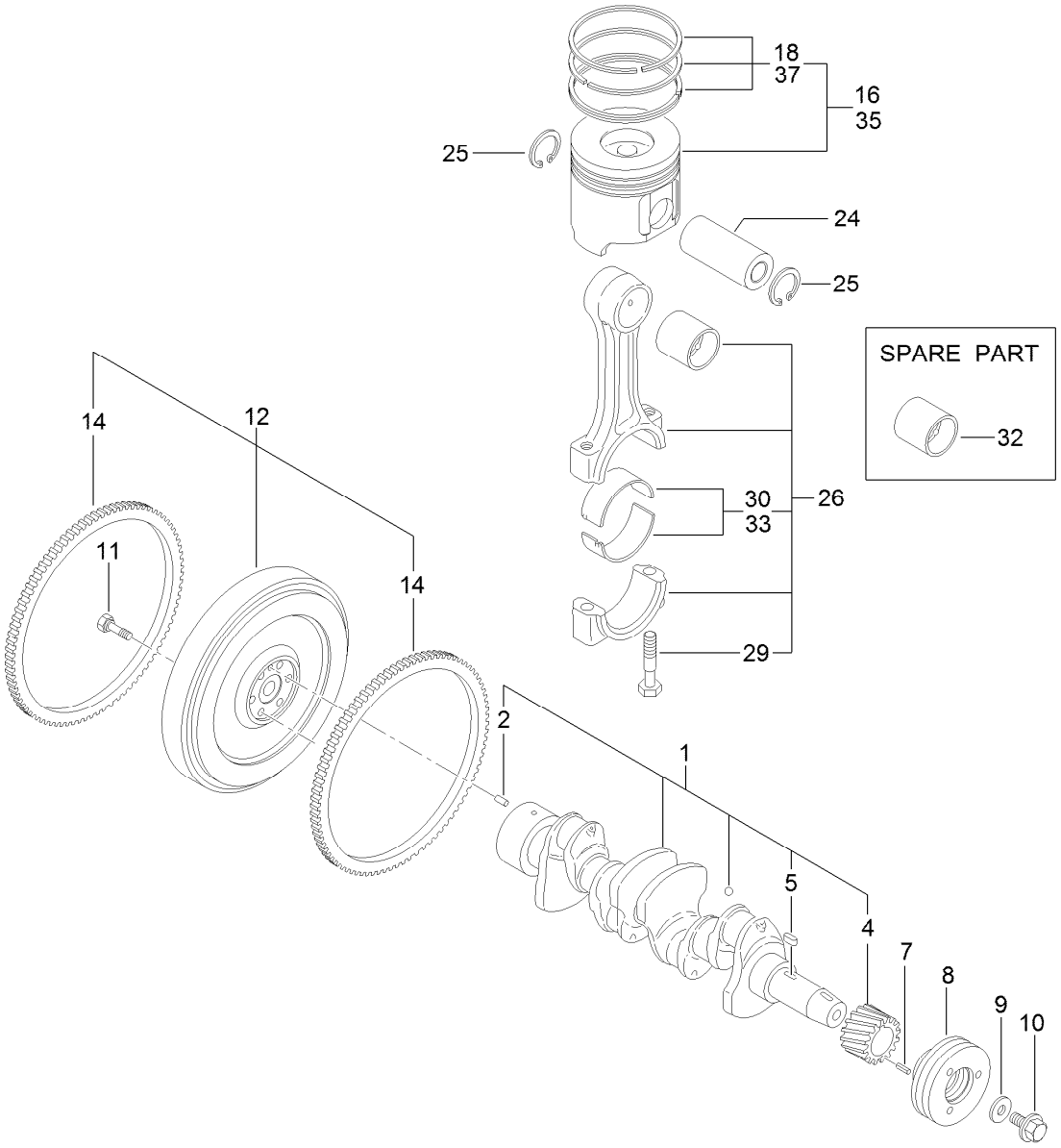

Crankshaft and Piston Assembly

Ref.	Part Number	Qty.	Description
1	125-7091	1	Crankshaft ASM
2	125-6995	1	Pin
4	125-6937	1	Gear
5	125-7185	1	Key
7	125-7182	1	Pin-Spring
8	125-6925	1	V-Pulley
9	125-7109	1	Washer
10	125-6956	1	Bolt
11	125-6951	6	Bolt
12	127-3160	1	Flywheel ASM
14	125-6943	1	Gear

Ref.	Part Number	Qty.	Description
16	127-3097	4	Piston ASM
18	127-3098	4	Piston Ring ASM
24	125-7030	4	Pin
25	125-7180	8	Ring
26	125-7242	4	Connecting Rod ASM
29	125-6955	8	Bolt
30	125-7018	4	Pin-Crank
32	125-6997	4	Pin-Piston
33	125-7019	4	Pin-Crank (.25)
35	127-3099	4	Piston ASM (0.25 O.S.)
37	127-3100	4	Piston Ring ASM (0.25 O.S.)

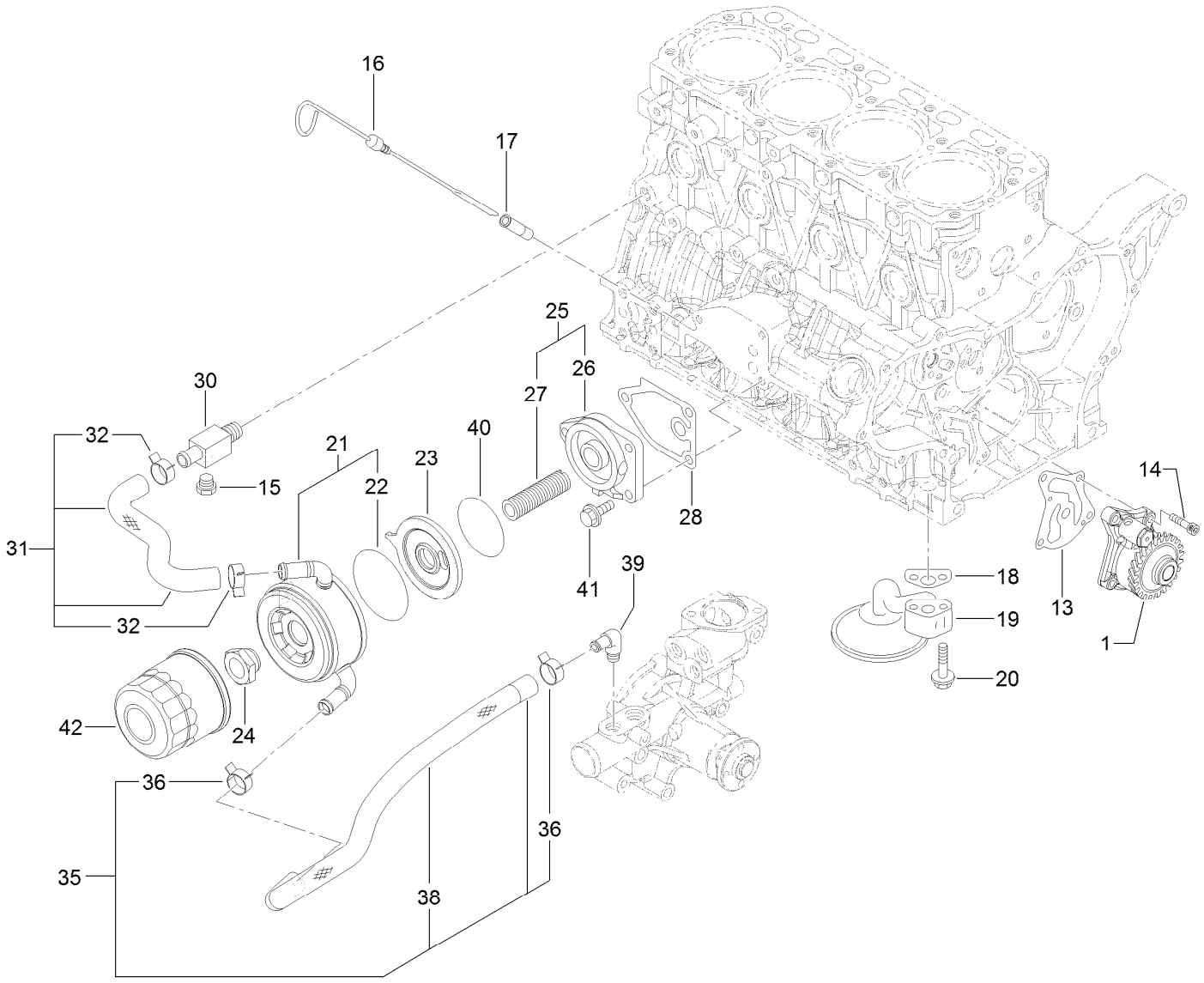

Lubrication and Oil System Assembly

Ref.	Part Number	Qty.	Description
1	127-3101	1	Oil Lube Pump ASM
13	127-3004	1	Gasket
14	125-7232	4	Bolt
15	125-7171	1	Plug-Drain
16	125-6987	1	Dipstick
17	125-6954	1	Guide-Dipstick
18	125-7022	1	Gasket
19	125-7023	1	Pipe ASM
20	125-7217	2	Bolt
21	127-3014	1	Cooler ASM
22	127-2985	1	O-Ring
23	127-3015	1	Bracket-Cooler
24	125-7041	1	Nut-Cooler, Oil
25	127-3009	1	Bracket ASM

Ref.	Part Number	Qty.	Description
26	125-6930	1	Bracket
27	127-3010	1	Stud
28	125-7024	1	Gasket
30	125-6990	1	Joint
31	127-3102	1	Pipe-Cooling, Water
32	125-7162	2	Clip
35	127-3103	1	Hose-Cooling, Water
36	125-7162	2	Clip
38	127-3007	1	Tube
39	125-7001	1	Elbow
40	127-3176	1	O-Ring
41	125-7595	3	Bolt
42	125-7025	1	Filter-Engine, Oil

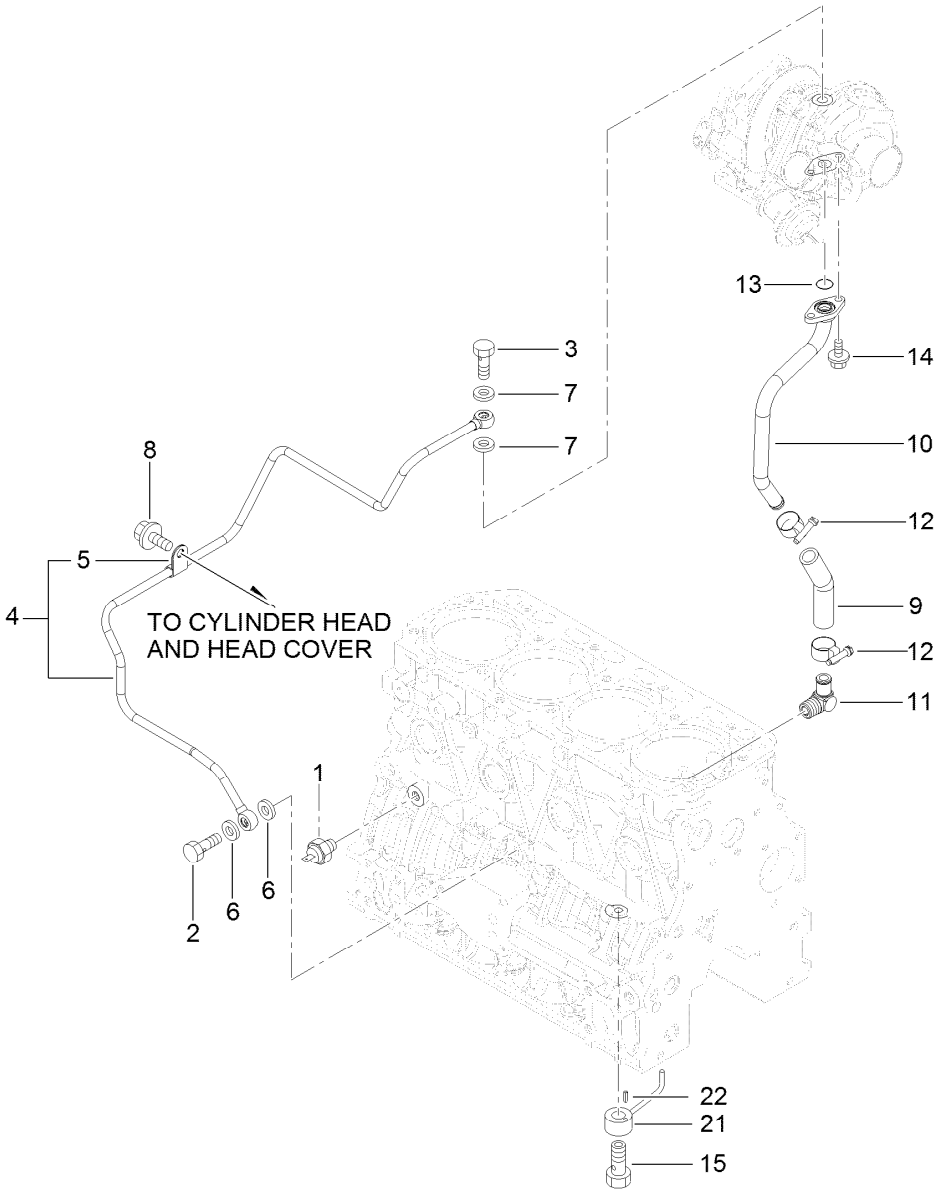

Lubrication Oil Line Assembly

Ref.	Part Number	Qty.	Description
1	125-6918	1	Switch-Oil
2	125-6975	1	Bolt-Joint, Pipe
3	125-6952	1	Bolt-Joint, Pipe
4	127-3154	1	Lube Oil Pipe ASM
5	125-6976	1	Retainer
6	125-7175	2	Washer-Seal
7	125-7193	2	Gasket
8	93-0362	1	Bolt
9	127-2992	1	Joint
10	127-3155	1	Pipe-Lube, Oil
11	127-3003	1	Elbow
12	127-3169	2	Clamp-Hose
13	125-7198	1	O-Ring
14	125-7208	2	Bolt
15	125-7105	4	Check Valve ASM
21	125-7098	4	Nozzle
22	125-7182	4	Pin-Spring

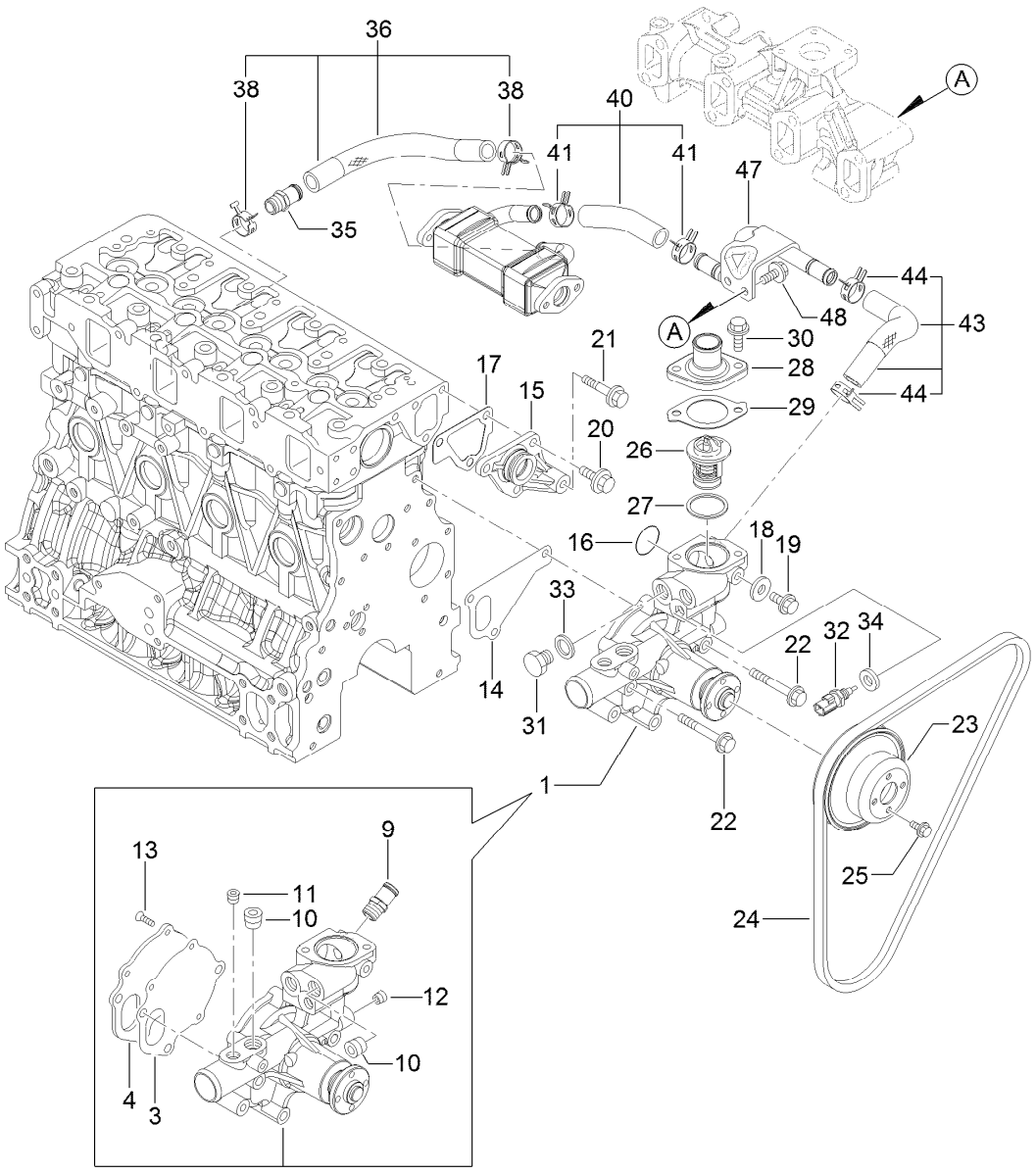

Cooling Water System Assembly

Ref.	Part Number	Qty.	Description
1	127-3071	1	Water Pump ASM
3	125-6998	1	Gasket
4	125-6999	1	Plate
9	127-3017	1	Joint
10	125-7123	2	Plug
11	127-3175	1	Plug
12	125-7195	1	Plug
13	125-7234	3	Screw
14	125-7047	1	Gasket
15	125-6986	1	Joint
16	125-7048	1	O-Ring
17	125-6978	1	Gasket
18	125-7192	1	Gasket
19	93-0362	1	Bolt
20	125-7214	3	Bolt
21	125-7219	1	Bolt
22	125-7222	3	Bolt
23	125-7039	1	V-Pulley
24	127-2998	1	V-Belt

Ref.	Part Number	Qty.	Description
25	125-7206	4	Bolt
26	125-7029	1	Thermostat
27	125-7026	1	Gasket
28	125-7034	1	Cover
29	125-7110	1	Gasket
30	125-7594	2	Bolt
31	125-6953	1	Plug
32	125-7124	1	Sensor-Thermostat, CW
33	125-6979	1	Gasket
34	125-7176	1	Washer-Seal
35	127-3017	1	Joint
36	127-3072	1	Water In Pipe ASM
38	127-3020	2	Clip-Hose
40	127-3115	1	Water Out Pipe ASM
41	127-3020	2	Clip-Hose
43	127-3116	1	Water Out Pipe ASM
44	127-3020	2	Clip-Hose
47	127-3117	1	Pipe-Out, CW
48	125-7214	2	Bolt

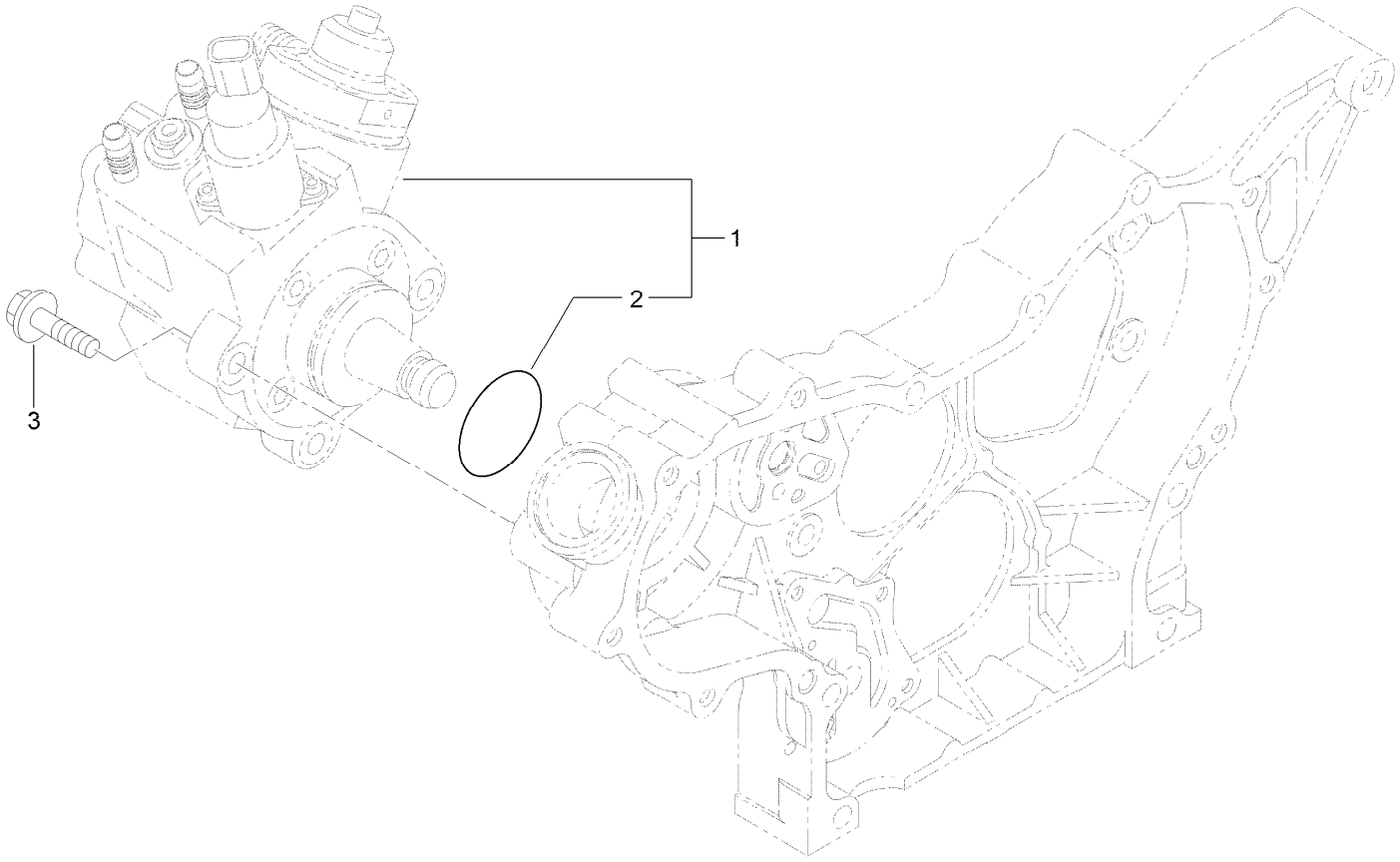

Fuel System Assembly

Ref.	*Part Number*	*Qty.*	*Description*
1	127-3073	1	Fuel Pump ASM
2	127-3074	1	O-Ring
3	125-7216	3	Bolt

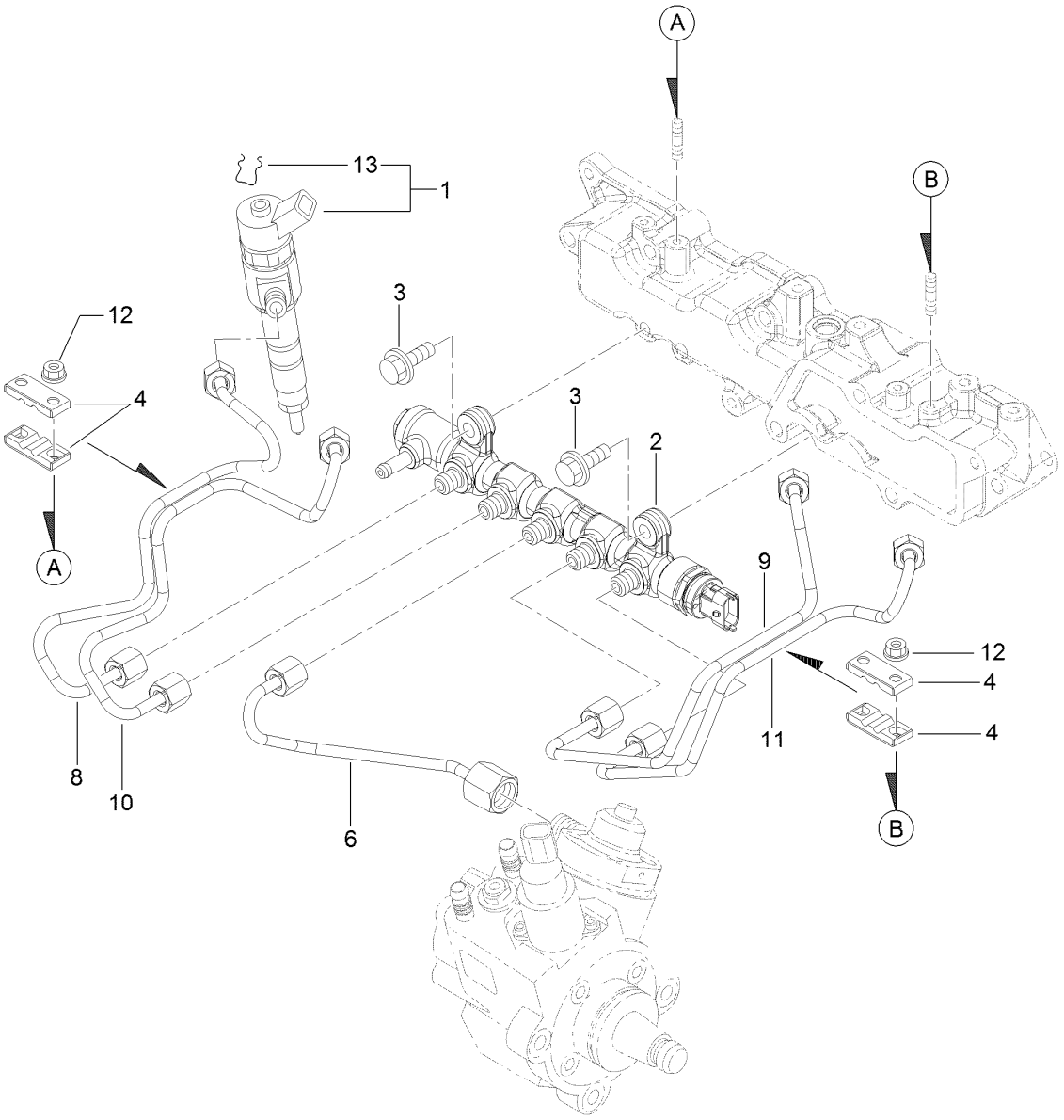

Fuel Injection Valve Assembly

Ref.	*Part Number*	*Qty.*	*Description*
1	127-3104	4	Injector ASM
2	127-3118	1	Rail ASM
3	125-7215	2	Bolt
4	127-2982	4	Retainer
6	127-3082	1	Rail In Pipe ASM
8	127-3121	1	Injection Pipe ASM
9	127-3083	1	Injection Pipe ASM
10	127-3122	1	Injection Pipe ASM
11	127-3084	1	Injection Pipe ASM
12	125-7231	4	Nut
13	130-7430	4	Ring-Retaining

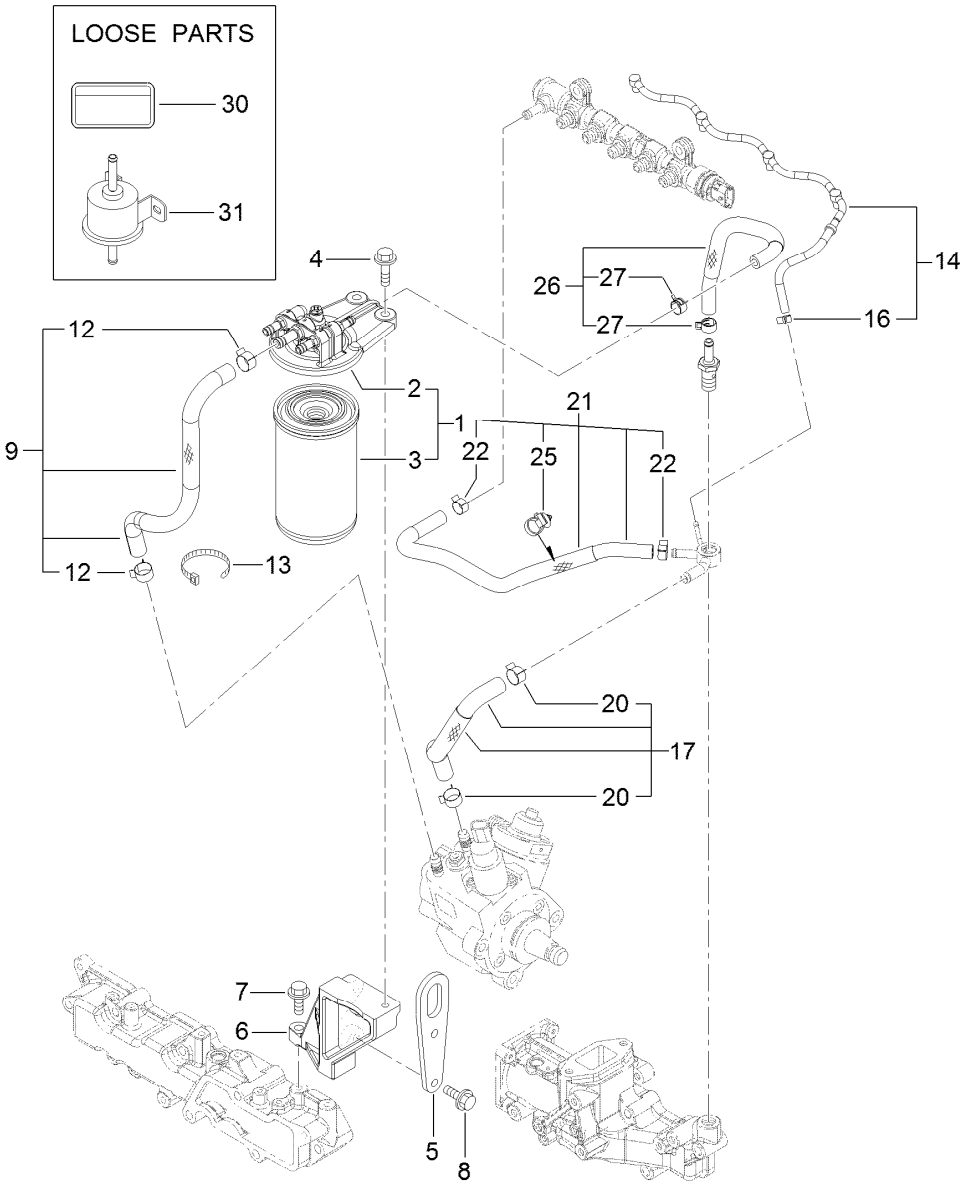

Fuel Line Assembly

Ref.	Part Number	Qty.	Description
1	127-3075	1	Fuel/Oil Filter ASM
2	127-3076	1	Fuel/Oil Filter Bracket ASM
3	125-8752	1	Filter-Fuel/Oil
4	125-7216	2	Bolt
5	127-3091	1	Lifter-Engine
6	127-3105	1	Stay-Bracket, Filter
7	125-7215	1	Bolt
8	125-7216	2	Bolt
9	127-3077	1	Fuel Pipe ASM
12	125-7191	2	Clamp-Hose
13	127-2981	1	Band

Ref.	Part Number	Qty.	Description
14	127-3120	1	Fuel Pipe ASM
16	127-3172	1	Clamp-Hose
17	127-3078	1	Fuel Pipe ASM
20	125-7191	2	Clamp-Hose
21	127-3119	1	Fuel Pipe ASM
22	127-2950	2	Clip-Hose
25	127-3087	1	Band-Clip
26	127-3079	1	Fuel Pipe ASM
27	127-2950	2	Clip-Hose
30	125-6900	1	Label-Caution, Fuel Oil
31	127-3008	1	Fuel Feed Pump ASM

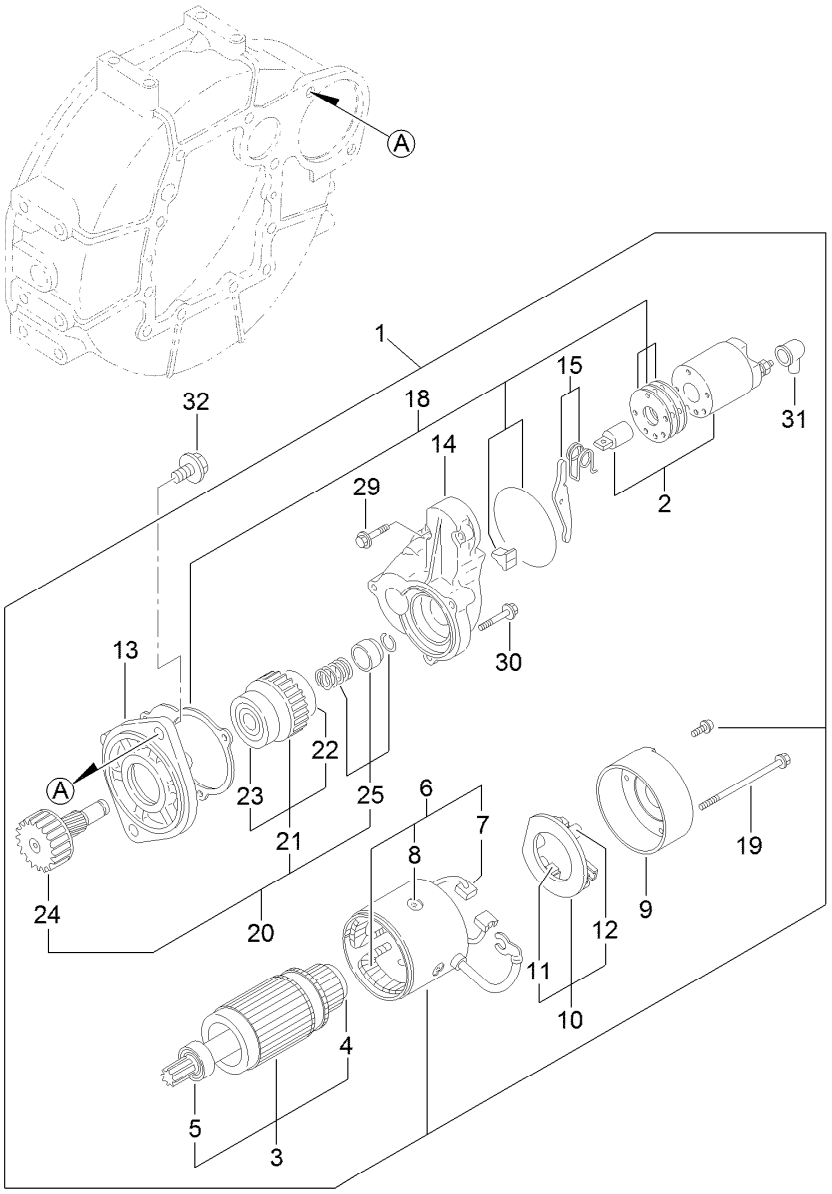

Starting Motor Assembly

Ref.	Part Number	Qty.	Description
1	125-7003	1	Starter
2	125-7004	1	Switch ASM
3	125-7112	1	Armature ASM
4	125-7252	1	Bearing-Ball
5	125-7249	1	Bearing, Ball
6	125-7113	1	Field Coil ASM
7	125-7114	2	Brush
8	125-7163	4	Screw
9	125-7115	1	Cover
10	125-7116	1	Brush Holder ASM
11	125-7114	2	Brush
12	125-7036	4	Spring
13	125-7164	1	Case-Gear
14	125-7005	1	Housing

Ref.	Part Number	Qty.	Description
15	125-7165	1	Lever Set
18	125-7037	1	Dust Cover ASM
19	125-7117	2	Bolt-Through
20	125-7166	1	Pinion ASM
21	125-7250	1	Clutch ASM
22	125-7251	1	Bearing-Ball
23	125-7253	1	Bearing-Ball
24	125-7167	1	Shaft
25	125-7168	1	Stopper Set
29	125-7210	2	Bolt
30	125-7211	3	Bolt
31	125-7169	1	Cover
32	125-7225	2	Bolt

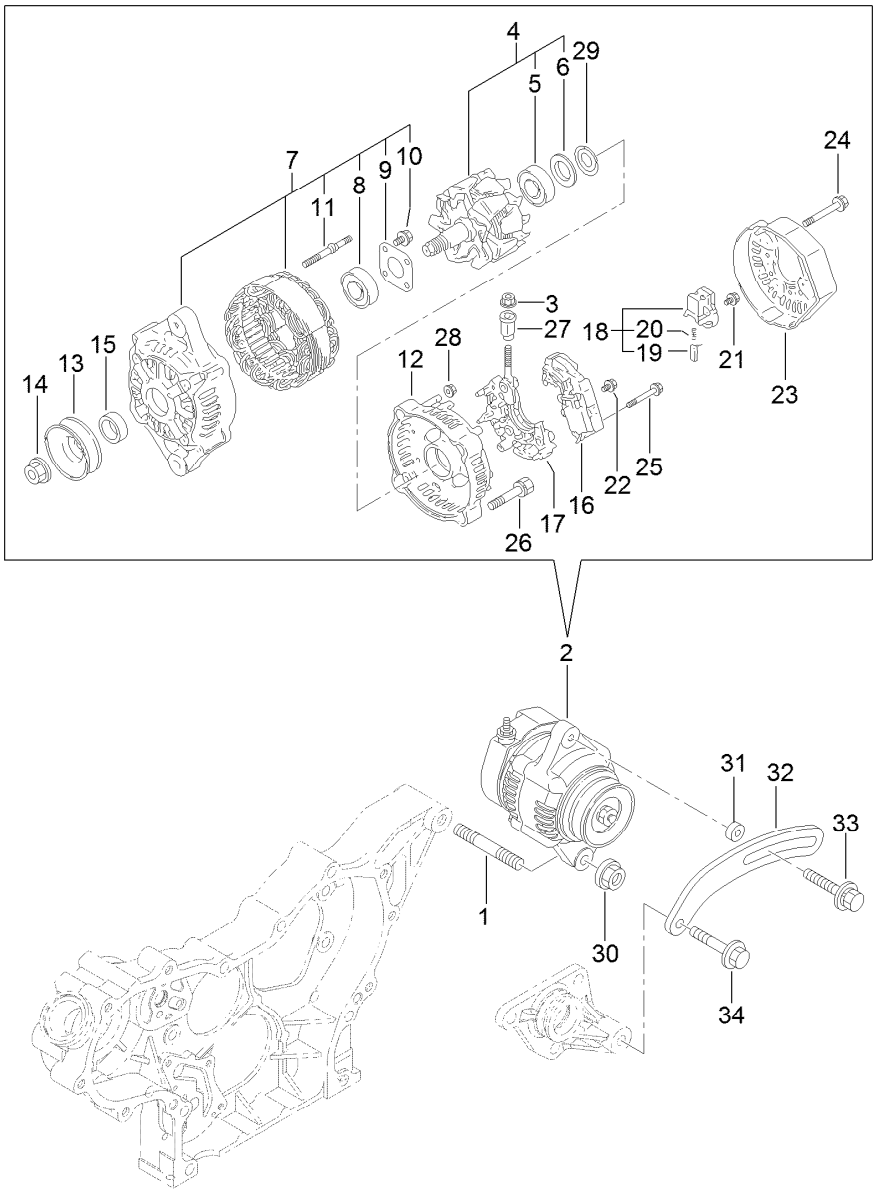

Generator Assembly

Ref.	Part Number	Qty.	Description
1	127-3011	1	Stud
2	127-3001	1	Generator
3	127-3190	1	Nut
4	127-2951	1	Rotor ASM
5	127-2983	1	Bearing-Ball
6	127-2962	1	Cover
7	127-2952	1	Frame ASM
8	127-2958	1	Bearing-Ball
9	127-2959	1	Plate-Retainer
10	127-2960	4	Screw
11	127-2961	2	Stud
12	127-2953	1	Frame ASM
13	127-2954	1	Pulley
14	127-2955	1	Nut
15	127-2957	1	Collar
16	127-3002	1	Regulator ASM
17	127-2963	1	Holder
18	127-2993	1	Holder
19	127-2956	2	Brush ASM
20	127-2964	2	Spring
21	127-2965	6	Screw
22	127-2966	1	Screw
23	127-2999	1	Cover
24	127-2967	3	Bolt
25	127-2968	2	Screw
26	127-2969	2	Bolt
27	127-2970	1	Bushing-Insulation
28	127-2971	2	Nut
29	127-2972	1	Washer
30	125-7230	1	Nut
31	125-6947	1	Spacer
32	127-2977	1	Adjuster
33	125-7134	1	Bolt
34	125-7219	1	Bolt

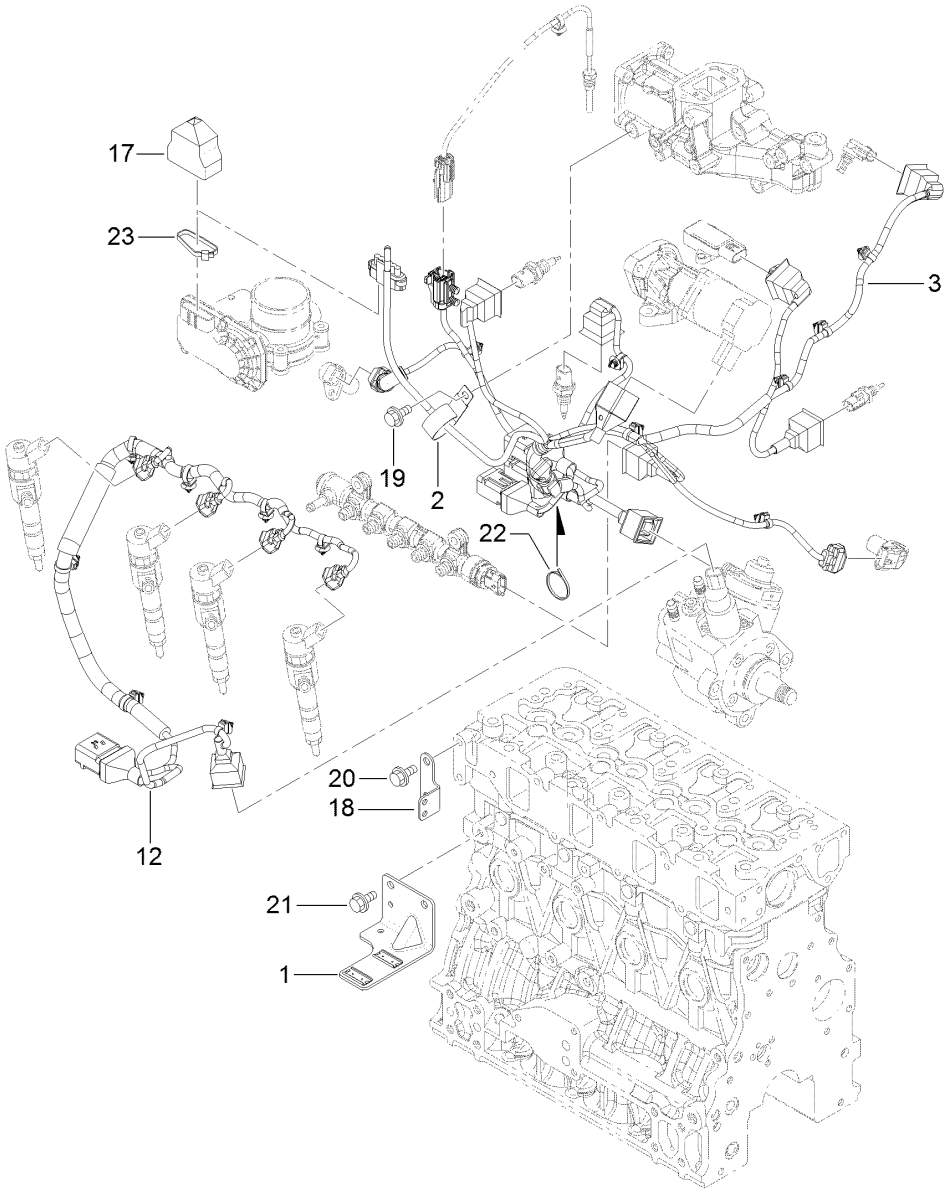

Electric Parts Assembly

Ref.	*Part Number*	*Qty.*	*Description*
1	127-3086	1	Bracket-Connector
2	127-3018	1	Clip
3	127-3156	1	Harness B-E C O, Engine
12	127-3125	1	Harness C
17	127-3089	1	Boot-Type, Cap
18	127-3090	1	Bracket-Harness
19	93-0362	1	Bolt
20	93-0362	2	Bolt
21	93-0362	2	Bolt
22	127-3187	1	Band
23	127-3188	1	Band

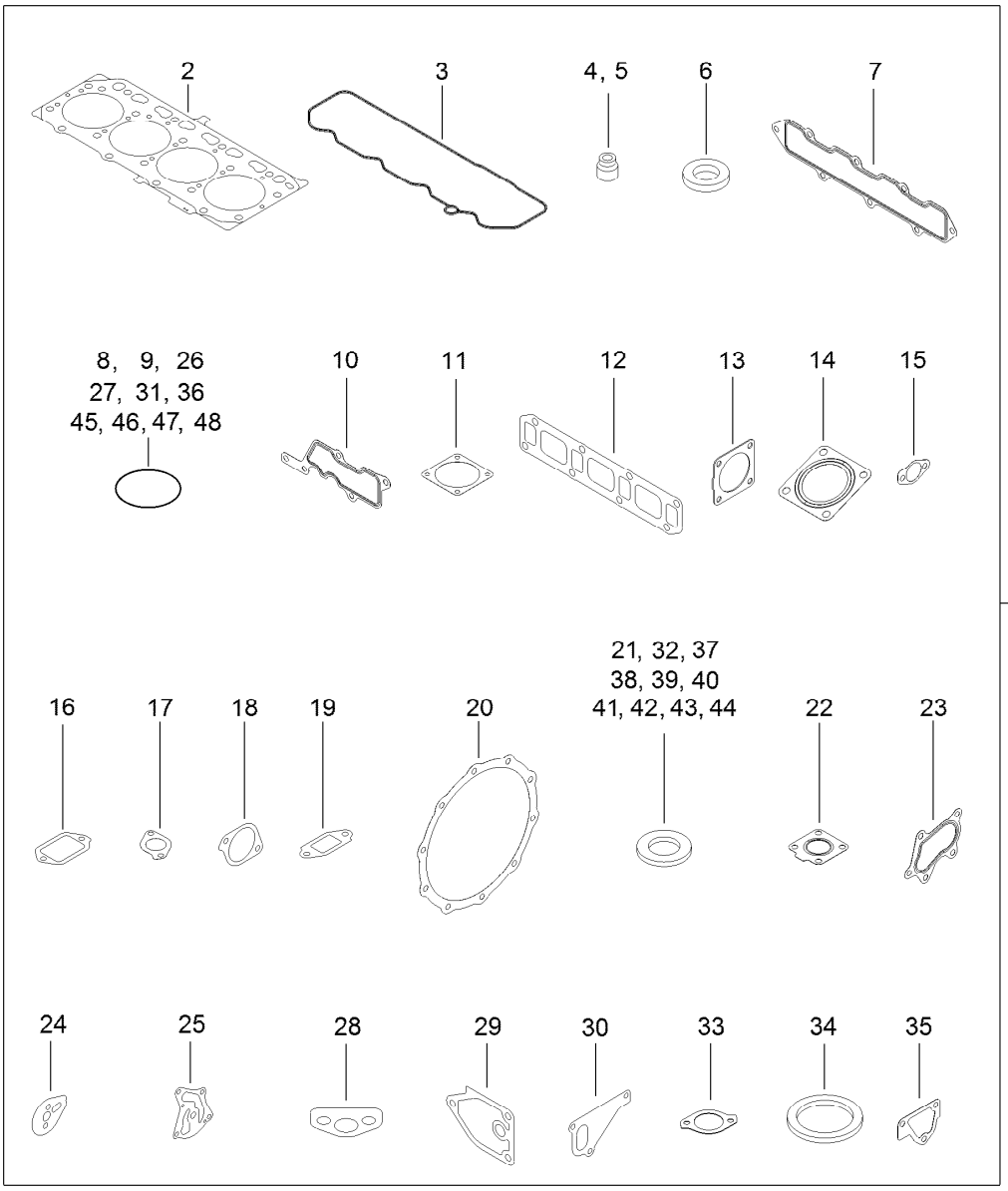

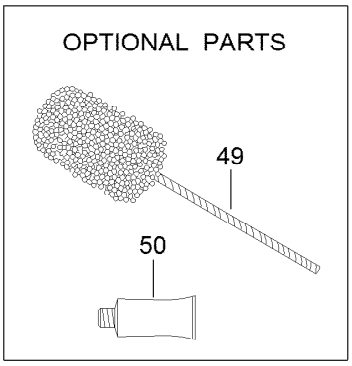

Gasket Set

Ref.	Part Number	Qty.	Description
1	127-3189	1	Gasket Kit
2	127-3126	1	Gasket-Head, Cylinder
3	127-3106	1	Gasket-Cover
4	127-2986	4	Seal-Stem, Valve
5	127-3027	4	Seal-Stem, Valve
6	127-3021	4	Gasket-Injector
7	127-3107	1	Gasket-Manifold, Intake
8	127-3032	2	O Ring-Sensor, Pressure
9	127-3033	1	O-Ring
10	127-3034	1	Gasket-Collector
11	127-3037	2	Gasket-Throttle
12	127-3108	1	Gasket-Manifold, Exhaust
13	127-3019	1	Gasket
14	127-2987	1	Gasket-Silencer
15	127-3043	2	Gasket-Cooler, E G R
16	127-3046	1	Gasket-E G R
17	127-3016	1	Gasket
18	127-3050	1	Gasket-Intake Valve, E G R
19	127-3051	1	Gasket-Out Valve, E G R
20	127-3162	2	Gasket-D P F
21	127-3056	4	Gasket-Sensor

Ref.	Part Number	Qty.	Description
22	125-7070	1	Gasket
23	125-7071	1	Gasket
24	127-3069	1	Gasket-Idle, Shaft B
25	127-3004	1	Gasket
26	125-6909	2	O-Ring
27	127-2973	1	O-Ring
28	125-7022	1	Gasket
29	125-7024	1	Gasket
30	125-7047	1	Gasket
31	125-7048	1	O-Ring
32	125-6979	1	Gasket
33	125-7110	1	Gasket
34	125-7026	1	Gasket
35	125-6978	1	Gasket
36	127-3074	1	O-Ring
37	125-7174	1	Washer-Seal
38	125-7175	2	Washer-Seal
39	125-7176	1	Washer-Seal
40	127-3166	2	Washer-Seal
41	125-7177	1	Washer-Seal
42	125-7192	1	Gasket

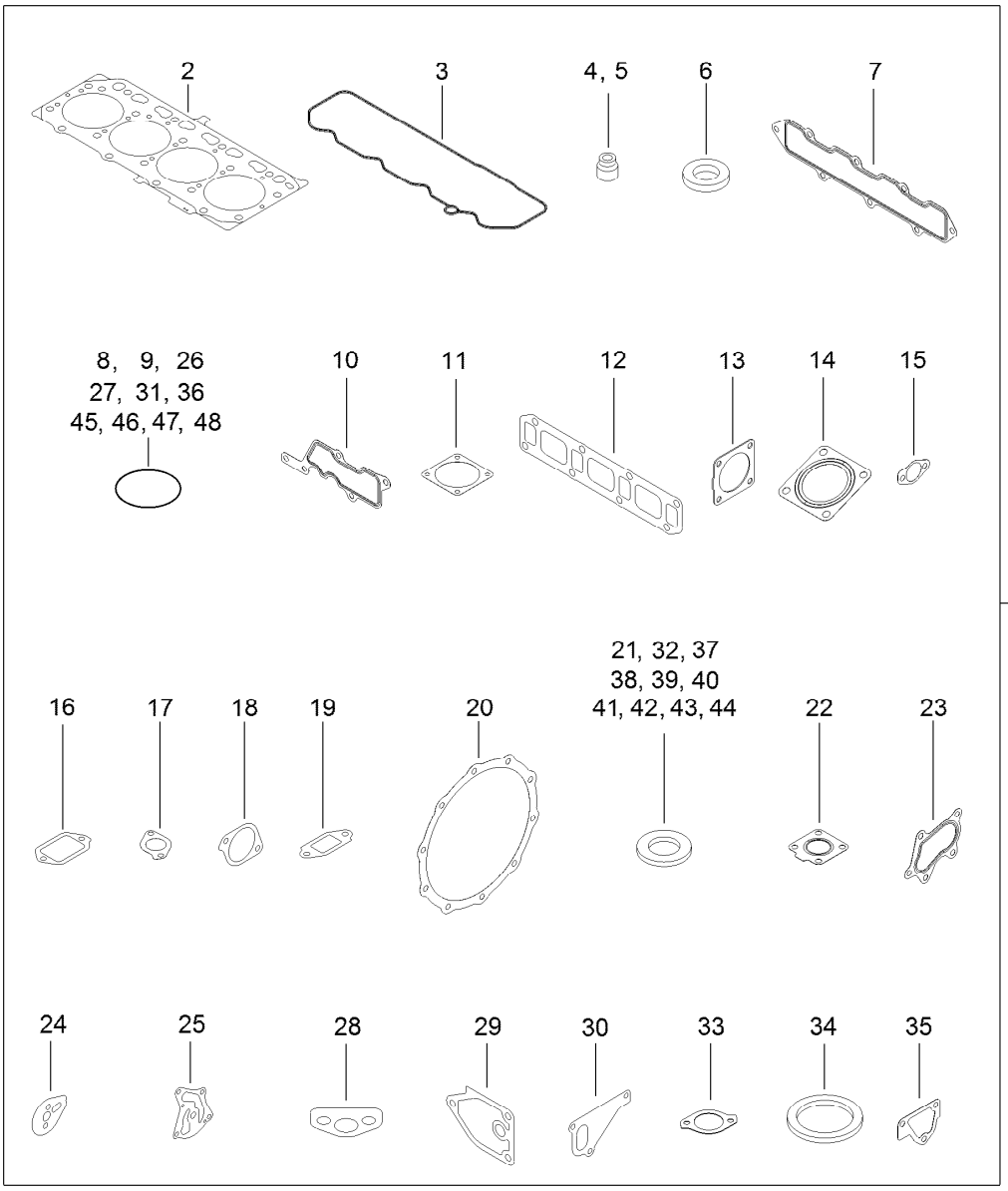

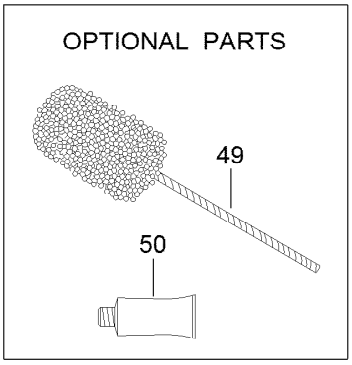

Gasket Set (continued)

Ref.	Part Number	Qty.	Description
43	125-7193	2	Gasket
44	127-3174	2	Gasket
45	93-0418	3	O-Ring
46	125-7197	1	O-Ring
47	125-7198	1	O-Ring
48	127-3176	1	O-Ring
49	127-3000	1	Hone
50	125-7248	1	Gasket-Liquid

Attachments and Accessories

For 30881 Groundsmaster 4500-D Traction Unit

Product Name	Model/Part
Blade-High Lift	104-5183
Blade-Angle Sail	105-9810-03
Blade-Atomic	107-0235-03
Premium All Season Hydraulic Fluid (55 Gallon Drum)	108-1177
Premium All Season Hydraulic Fluid (5 Gallon Pail)	108-1178
Premium All Purpose Grease (Tube)	108-1190
27in Blade Service Pack (qty 5)	108-1463
Blade-Combo	108-9026-03
Operator Fan Kit - US Sales Only, 3in ROPS Post	110-8804
Sectional Roller Assembly	117-5121
Windscreen Kit	117-9440
Extension Kit for 2-Post ROPS	119-0020
Premium Synthetic Bio-Degradable Hydraulic Fluid (5 Gallon Pail)	119-2157
Premium Synthetic Bio-Degradable Hydraulic Fluid (55 Gallon Drum)	119-2158
Universal Sunshade	30349
400 Hour MVP Kit	30408
CE Light Kit	30491
27in Rotary Cutting Unit	30834
Leaf Mulching Kit	30836
Cab Kit	30860
Flow Divider Kit	30876

Notes:



Count on it.