FORM NO. 3312-437

TORO®

MODEL NO. 16575 — 4000001 & UP

**PARTS CATALOG**

# 21″ H.P. SIDE DISCHARGE

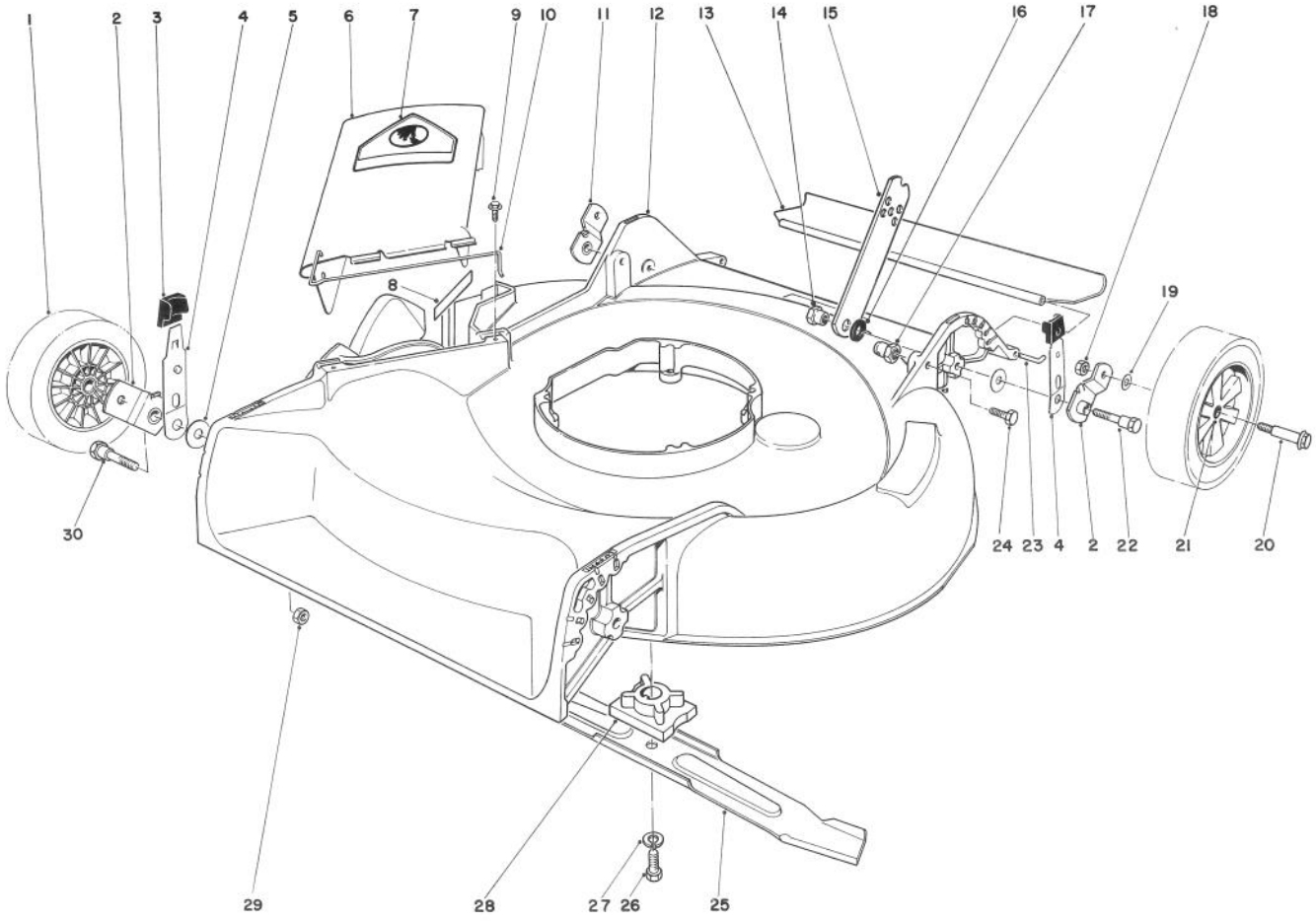


## HOUSING ASSEMBLY

| Ref. No. | Part No. | Description | No. Used |
|---|---|---|---|
| 1 | 27-6200 | Wheel & Tire Assembly (Incl. Ref. #21) | 4 |
| 2 | 20-2140 | Pivot Arm "A" | 2 |
| 3 | 25-7740 | Knob — Spring Arm | 4 |
| 4 | 25-8000 | Spring Arm | 4 |
| 5 | 5-4460 | Washer — Pivot | 4 |
| 6 | 27-7817 | Deflector Assembly (Incl. Ref. #7 & 10) | 1 |
| 7 | 39-5770 | Decal — Danger | 1 |
| 8 | 22-7350 | Decal — Danger | 1 |
| 9 | 46-6811 | Screw & Washer Assembly | 2 |
| 10 | 20-2640 | Hinge — Spring | 1 |
| 11 | 20-2130 | Pivot Arm "B" | 2 |
| 12 | 11-4589 | Housing (Incl. Ref. #8) | 1 |
| 13 | 22-4950 | Shield — Rear | 1 |
| 14 | 27-6520 | Nut — Shoulder | 2 |
| 15 | 27-7080 | Latch — Handle | 2 |

| Ref. No. | Part No. | Description | No. Used |
|---|---|---|---|
| 16 | 3-3287 | Spacer — Handle Latch | 2 |
| 17 | 12-2080 | Nut — Shoulder | 2 |
| 18 | 3296-6 | Nut — Lock | 4 |
| 19 | 40-1940 | Washer — Wheel Bolt | 4 |
| 20 | 27-6231 | Bolt — Wheel | 4 |
| 21 | 27-6250 | Bushing — Wheel | 8 |
| 22 | 28-8880 | Screw — Pivot | 2 |
| 23 | 33-3201 | Rod — Rear Shield | 1 |
| 24 | 322-6 | Screw — Cap Hex Hd. | 2 |
| 25 | 20-2720 | Blade | 1 |
| 26 | 26-0671 | Screw — Blade | 1 |
| 27 | 3253-22 | Washer — Lock | 1 |
| 28 | 49-7890 | Retainer — Blade | 1 |
| 29 | 3296-29 | Nut — Lock | 2 |
| 30 | 25-3440 | Screw — Pivot | 2 |
| * | 11-8909 | Loose Parts | 1 |

*Not Illustrated

©The Toro Company — 1984

PRICE $1.00

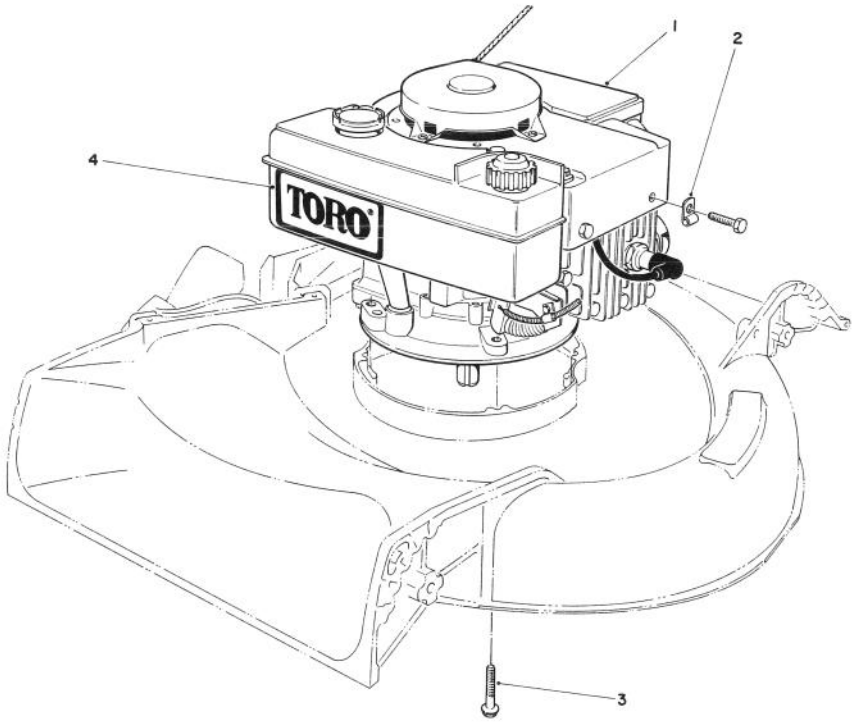


# ENGINE ASSEMBLY

| Ref. No. | Part No. | Description | No. Used |
|---|---|---|---|
| 1 | 221-764 | Engine | 1 |
| 2 | 2412-63 | Clamp — Casing | 1 |

| Ref. No. | Part No. | Description | No. Used |
|---|---|---|---|
| 3 | 11-0580 | Screw — Engine | 3 |
| 4 | 44-0510 | Decal — Toro | 1 |

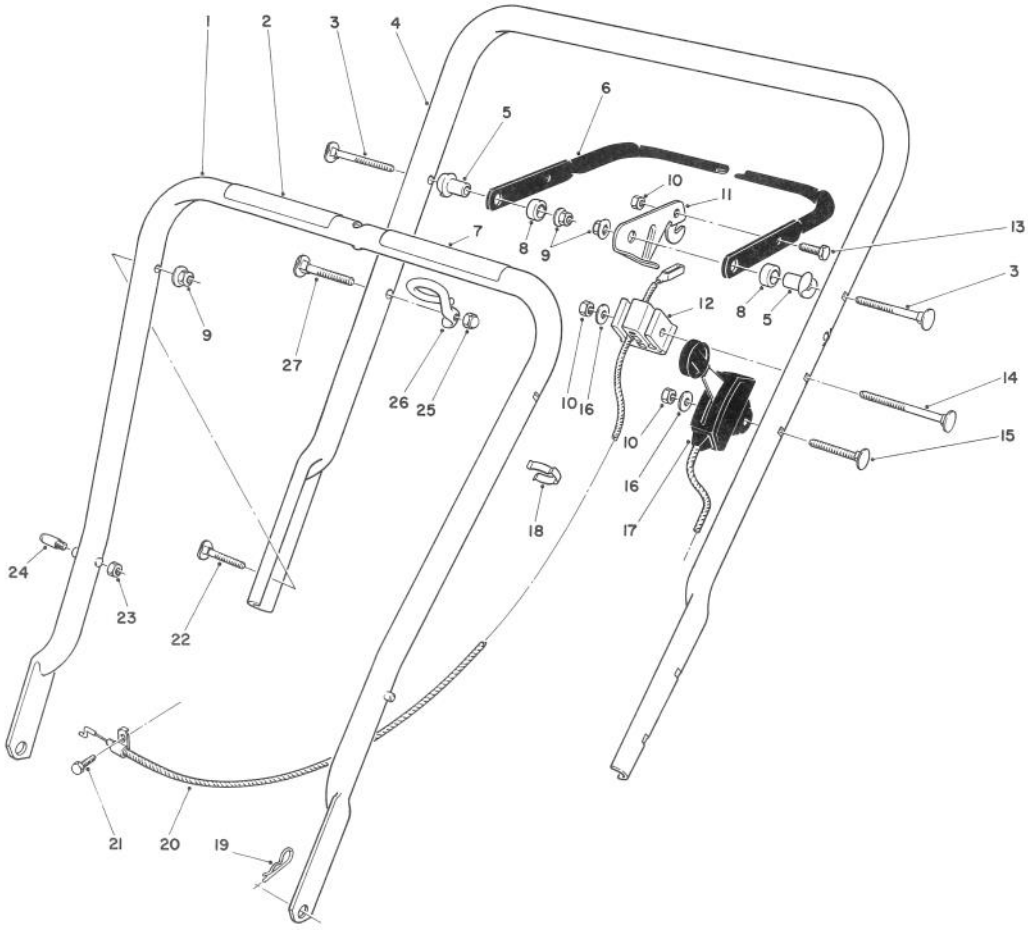


# HANDLE ASSEMBLY

| Ref. No. | Part No. | Description | No. Used |
|---|---|---|---|
| 1 | 11-8889 | Lower Handle Assembly (Incl. Ref. #2 & 7) | 1 |
| 2 | 51-1590 | Decal — Instructions | 1 |
| 3 | 17-9421 | Screw — Handle | 2 |
| 4 | 49-4231 | Handle — Upper | 1 |
| 5 | 49-1630 | Support — Spacer | 2 |
| 6 | 49-4220 | Bar — Control | 1 |
| 7 | 49-1770 | Decal — Danger | 1 |
| 8 | 256-276 | Spacer — Nylon | 2 |
| 9 | 3296-58 | Nut — Flange Lock | 4 |
| 10 | 3296-42 | Nut — Lock | 3 |
| 11 | 46-7950 | Lever — Control | 1 |
| 12 | 46-6980 | Support — Cable | 1 |
| 13 | 321-3 | Capscrew | 1 |
| 14 | 46-6434 | Screw — Handle | 1 |
| 15 | 46-6430 | Screw — Handle | 1 |

| Ref. No. | Part No. | Description | No. Used |
|---|---|---|---|
| 16 | 3256-22 | Washer — Flat | 2 |
| 17 | 46-6000 | Control — Throttle (Bend Type #1) (Sheath Lg. 30") (Wire Lg. 2-1/8") | 1 |
| 18 | 218-465 | Clip — Cable (Double) | 1 |
| 19 | 3290-255 | Pin — Cotter Hair | 2 |
| 20 | 46-8010 | Cable — Brake | 1 |
| 21 | 2210-250 | Capscrew | 1 |
| 22 | 17-9424 | Screw — Handle | 2 |
| †23 | 3296-47 | Nut — Lock | 2 |
| †24 | 49-2750 | Pin — Handle | 2 |
| 25 | 32111-7 | Nut — Acorn | 1 |
| 26 | 46-8080 | Guide — Rope | 1 |
| 27 | 46-6433 | Screw — Handle | 1 |

†Service Replacement Part

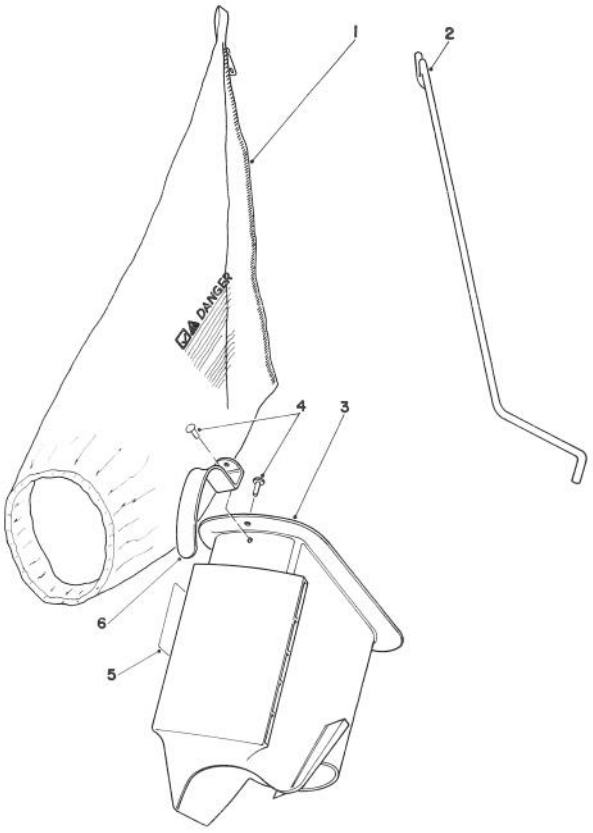


# BAGGING KIT NO. 47-6510 (OPTIONAL)

| Ref. No. | Part No. | Description | No. Used |
|---|---|---|---|
| 1 | 6-0929 | Grass Bag | 1 |
| 2 | 47-5830 | Bag Rod | 1 |
| 3 | 6-1089 | Grass Chute (Incl. Ref. #4 & 6) | 1 |

| Ref. No. | Part No. | Description | No. Used |
|---|---|---|---|
| 4 | 3295-26 | Rivet | 2 |
| 5 | 36-5230 | Decal — Bag Chute | 1 |
| 6 | 20-4650 | Handle Chute | 1 |

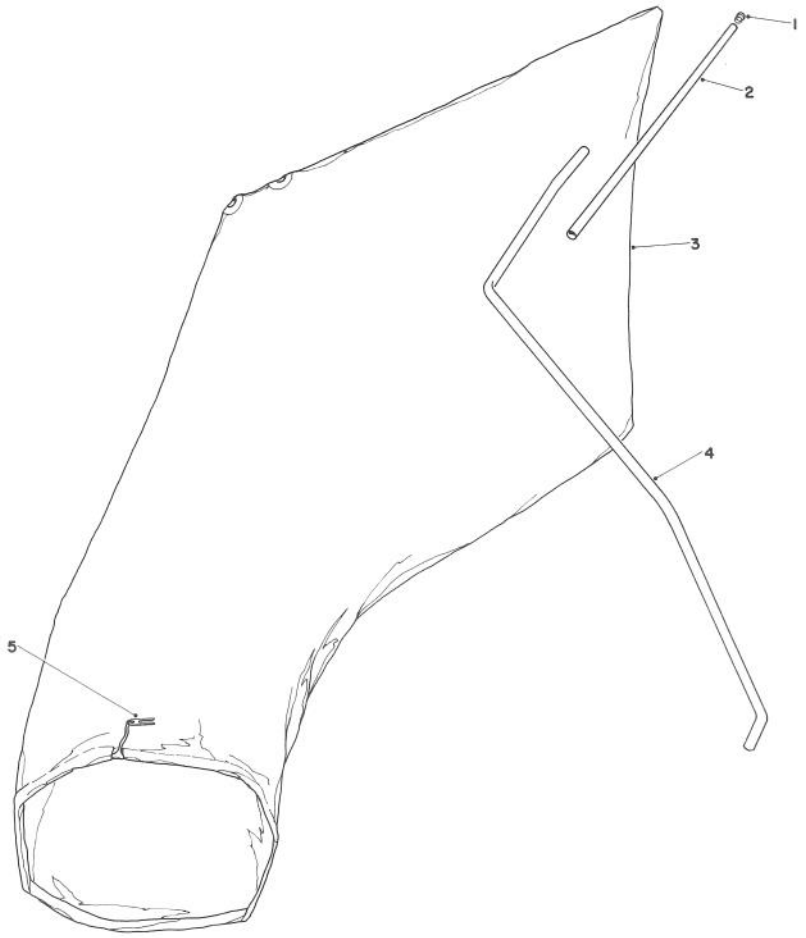


# GIANT BAGGING KIT NO. 29-9750 (OPTIONAL)

| Ref. No. | Part No. | Description | No. Used |
|---|---|---|---|
| 1 | 2410-29 | Cap | 1 |
| 2 | 29-7000 | Tube 25" | 1 |
| 3 | 8-4719 | Bag (Incl. Ref. #5) | 1 |

| Ref. No. | Part No. | Description | No. Used |
|---|---|---|---|
| 4 | 22-4820 | Hanger Rod | 1 |
| 5 | 3-2781 | Bag Cord Fasteners | 1 |

# ENGINE TECUMSEH MODEL NO. TVS90-43228D

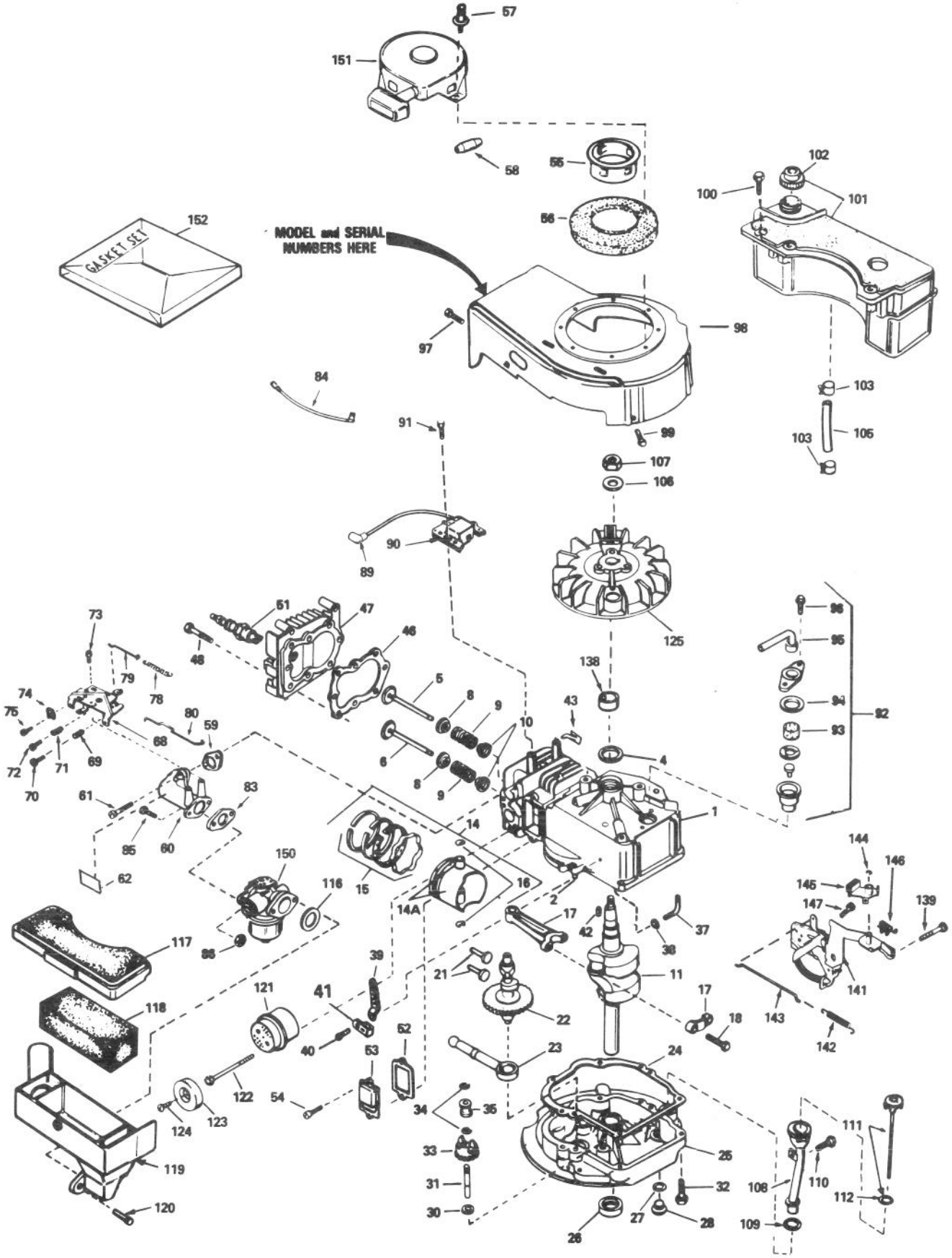

# ENGINE TECUMSEH MODEL NO. TVS90-43228D

| Ref. No. | Part No. | Description | No. Used |
|---|---|---|---|
| 1 | 34975 | Cylinder Assy. (Incl. #2 & 4) | 1 |
| 2 | 26727 | Pin — Dowel | 2 |
| 4 | 32600 | Seal — Oil | 1 |
| 5 | 29314B | Valve — Intake (Std.) (Incl. #10) | 1 |
| 5 | 29315C | Valve — Intake (1/32" Oversize) (Incl. #10) | 1 |
| 6 | 29313C | Valve — Exhaust (Std.) (Incl. #10) | 1 |
| 6 | 29315C | Valve — Exhaust (1/32" Oversize) (Incl. #10) | 1 |
| 8 | 31671 | Cap — Upper Valve Spring | 2 |
| 9 | 31672 | Spring — Valve | 2 |
| 10 | 31673 | Cap — Lower Valve Spring | 2 |
| 11 | 34440 | Crankshaft | 1 |
| 14 | 34514 | Piston — Pin & Ring Assy. (Std.) (Incl. #14A, 15 & 16) | 1 |
| 14 | 34515 | Piston — Pin & Ring Assy. (.010 Oversize) (Incl. #14A, 15 & 16) | 1 |
| 14 | 34516 | Piston — Pin & Ring Assy. (.020 Oversize) (Incl. #14A, 15 & 16) | 1 |
| 14A | 32538B | Piston & Pin Assy. (Std.) (Incl. #16) | 1 |
| 14A | 32548B | Piston & Pin Assy. (.010 Oversize) (Incl. #16) | 1 |
| 14A | 32549B | Piston & Pin Assy. (.020 Oversize) (Incl. #16) | 1 |
| 15 | 28986 | Ring Set — Piston (Std.) | 1 |
| 15 | 28987 | Ring Set — Piston (.010 Oversize) | 1 |
| 15 | 28988 | Ring Set — Piston (.020 Oversize) | 1 |
| 16 | 20381 | Ring — Piston Pin Retaining | 2 |
| 17 | 30963B | Rod Assy. — Connecting (Incl. #18) | 1 |
| 18 | 32610A | Screw — Connecting Rod | 2 |
| 21 | 27241 | Lifter — Valve | 2 |
| 22 | 33553 | Camshaft (Mechanical Compression Release) | 1 |
| 23 | 29914 | Pump Assy. — Oil | 1 |
| 24 | *26750A | Gasket — Mounting Flange | 1 |
| 25 | 34831 | Flange Assy. — Mounting (Incl. #26, 27, 28 & 31) | 1 |
| 26 | 26208 | Seal — Oil | 1 |
| 27 | *28833 | Gasket — Oil Drain Plug | 1 |
| 28 | 27244 | Plug — Oil Drain | 1 |
| 30 | 30590A | Washer — Flat | 1 |
| 31 | 30574 | Shaft — Mechanical Governor | 1 |
| 32 | 650488 | Screw — Hex Hd. | 6 |
| 33 | 30591 | Gear Assy. — Governor (Incl. #30) | 1 |

| Ref. No. | Part No. | Description | No. Used |
|---|---|---|---|
| 34 | 29193 | Ring — Retaining | 2 |
| 35 | 30588A | Spool — Governor | 1 |
| 37 | 30589 | Rod — Governor (Incl. #38) | 1 |
| 38 | 28277 | Washer — Flat | 1 |
| 39 | 31383A | Lever — Governor | 1 |
| 40 | 650548 | Screw — Hex Washer Hd. | 1 |
| 41 | 31335 | Clamp — Governor Lever | 1 |
| 42 | 611004 | Key — Flywheel (Solid State) | 1 |
| 43 | 29443 | Clip — Spring | 1 |
| 46 | *29953B | Gasket — Cylinder Head | 1 |
| 47 | 34335 | Head — Cylinder | 1 |
| 48 | 6021A | Screw — Hex Flange Hd. | 8 |
| 51 | 35078 | Plug — Spark (Autolite 458, Champion J-19LM or Equivalent | 1 |
| 52 | *27234 | Gasket — Breather | 1 |
| 53 | 32755 | Cover — Valve Spring | 1 |
| 54 | 650128 | Screw — Fil. Hd. | 2 |
| 55 | 34449 | Hub — Starter | 1 |
| 56 | 35009 | Screen — Starter | 1 |
| 57 | | Pop Rivet (Can Be Purchased Locally) | 4 |
| 58 | 34985 | Rope Stop & Staple Assy. | 1 |
| 59 | *34690 | Gasket — Intake | 1 |
| 60 | 31384A | Pipe — Intake (Incl. #59) | 1 |
| 61 | 650451 | Screw — Hex Hd. | 2 |
| 62 | 34144 | Decal — Primer | 1 |
| 68 | 33131A | Control Assy. — Remote Speed (Incl. #69-72) | 1 |
| 69 | 33802 | Spring — Compression | 1 |
| 70 | 650777 | Screw — Fil. Hd. | 1 |
| 71 | 31342 | Spring — Compression | 1 |
| 72 | 650549 | Screw — Fil. Hd. | 1 |
| 73 | 30200 | Screw — Hex Washer Hd. Self-Tap | 2 |
| 74 | 27793 | Clip — Conduit | 1 |
| 75 | 28942 | Screw — Hex Washer Hd. | 1 |
| 78 | 31361 | Spring — Governor | 1 |
| 79 | 34337 | Link — Governor Spring | 1 |
| 80 | 34336 | Link — Governor-To-Throttle | 1 |
| 83 | *26756 | Gasket — Carburetor | 1 |
| 84 | 34961 | Wire — Ground | 1 |
| 85 | 6201 | Screw — Hex Hd. | 2 |
| 86 | 29752 | Nut & Lockwasher | 2 |
| 89 | 610118 | Cover — Spark Plug | 1 |
| 90 | 34443A | Lamination & Coil Assy. (Solid State) (Incl. #89) | 1 |
| 91 | 650814 | Screw — Hex Hd. | 2 |
| 92 | 34214A | Breather Assy. (Incl. #93-96) | 1 |
| 93 | 33734 | Element — Breather | 1 |
| 94 | 33735 | Gasket — Breather | 1 |
| 95 | 33886 | Tube — Breather | 1 |

* Indicates parts included in Gasket Set, Ref. #152.

# ENGINE TECUMSEH MODEL NO. TVS90-43228D (Cont.)

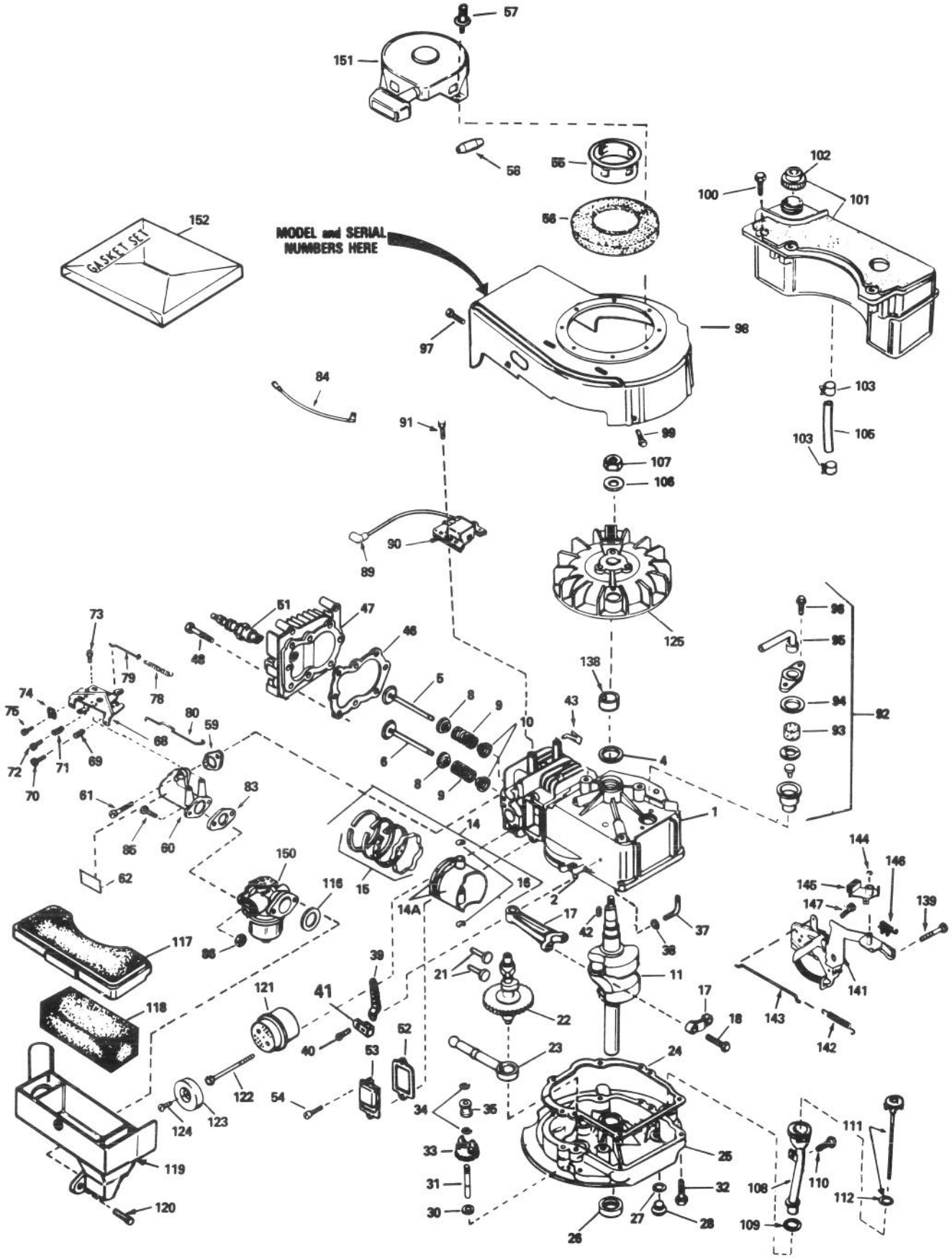

# ENGINE TECUMSEH MODEL NO. TVS90-43228D (Cont.)

| Ref. No. | Part No. | Description | No. Used |
|---|---|---|---|
| 96 | 30200 | Screw — Hex Washer Hd. Self-Tap | 2 |
| 97 | 30200 | Screw — Hex Washer Hd. Self-Tap | 2 |
| 98 | 34936 | Housing — Blower | 1 |
| 99 | 650831 | Screw — Hex Washer Hd. Powerlok Thread | 2 |
| 100 | 28763 | Screw — Hex Washer Hd. | 3 |
| 101 | 34476 | Tank Assy. — Fuel (Incl. #102) | 1 |
| 102 | 33032 | Cap — Fuel Tank | 1 |
| 103 | 26460 | Clamp — Fuel Line | 2 |
| 105 | 34682 | Line — Fuel | 1 |
| 106 | 650815 | Washer — Belleville | 1 |
| 107 | 650816 | Nut — Flywheel | 1 |
| 108 | 34264 | Tube — Oil Fill | 1 |
| 109 | 34265 | Gasket — Oil Fill Tube | 1 |
| 110 | 650562 | Screw — Hex Washer Hd. | 1 |
| 111 | 34281 | Dipstick — Oil (Incl. #112) | 1 |
| 112 | 33590 | "O" Ring | 1 |
| 116 | *34338 | Gasket — Air Cleaner | 1 |
| 117 | 34341 | Cover — Air Cleaner | 1 |
| 118 | 34340 | Element — Air Cleaner | 1 |
| 119 | 34858 | Body — Air Cleaner | 1 |
| 120 | 650806 | Screw — Hex Washer Hd. Shoulder | 2 |
| 121 | 27181B | Muffler (Incl. #122) | 1 |
| 122 | 650795 | Screw, Hex Hd. | 2 |
| 123 | 32431 | Cover — Muffler | 1 |
| 124 | 650643 | Screw — Pan Hd. Self-Tap | 1 |
| 125 | 611046 | Flywheel | 1 |
| 138 | 34080 | Spacer — Flywheel Key | 1 |
| 139 | 650839 | Screw — Hex Hd. Self-Tap | 2 |
| 141 | 35015 | Bracket Assy. | 1 |
| 142 | 34965 | Spring — Extension | 1 |
| 143 | 34966 | Link — Control | 1 |
| 144 | 32309 | Ring — Retaining | 1 |
| 145 | 34968 | Lever — Brake | 1 |
| 146 | 610973 | Terminal Assy. | 1 |
| 147 | 650837 | Screw — Hex Hd. E.T. | 1 |
| 150 | 632098 | Carburetor (Incl. #83) | 1 |
| 151 | 590420A | Starter — Rewind | 1 |
| 152 | 33238C | Gasket Set (Incl. Items Marked *) | 1 |

* Indicates parts included in Gasket Set, Ref. #152.

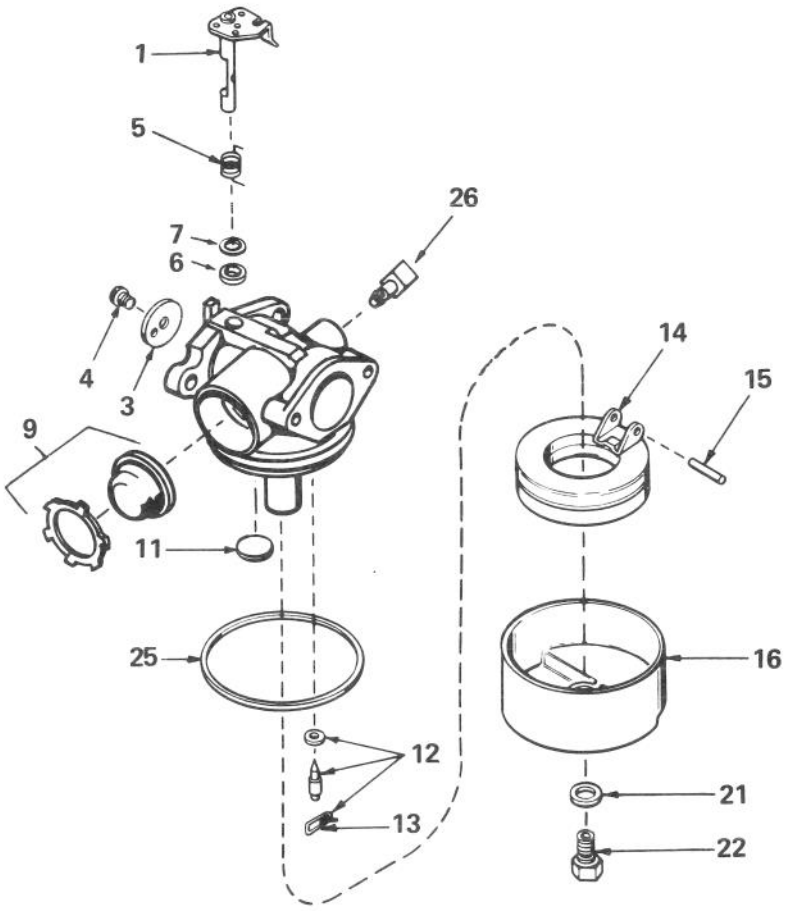


# CARBURETOR NO. 632098

| Ref. No. | Part No. | Description | No. Used |
|---|---|---|---|
| 1 | 631615 | Shaft & Lever Assy., Throttle | 1 |
| 3 | 631616 | Shutter — Throttle | 1 |
| 4 | 650506 | Screw — Throttle Shutter | 1 |
| 5 | 631767 | Spring — Throttle Return | 1 |
| 6 | 631971 | Seal — Dust | 1 |
| 7 | 631184 | Washer — Flat | 1 |
| 9 | 632047 | Primer Assembly | 1 |
| 11 | 631027 | Plug — Welch | 1 |
| 12 | 631021 | Inlet Needle — Seat & Clip Assy. (Incl. Ref. #13) | 1 |

| Ref. No. | Part No. | Description | No. Used |
|---|---|---|---|
| 13 | 631022 | Clip — Inlet Needle | 1 |
| 14 | 632019 | Float — Carburetor | 1 |
| 15 | 631024 | Shaft — Float | 1 |
| 16 | 631700 | Bowl — Float | 1 |
| 21 | 631334 | Gasket — Bowl-To-Body | 1 |
| 22 | 631937 | Nut — Float Bowl | 1 |
| 25 | 631028 | Gasket — Bowl-To-Body | 1 |
| 26 | 631807 | Fitting — Fuel Inlet | 1 |

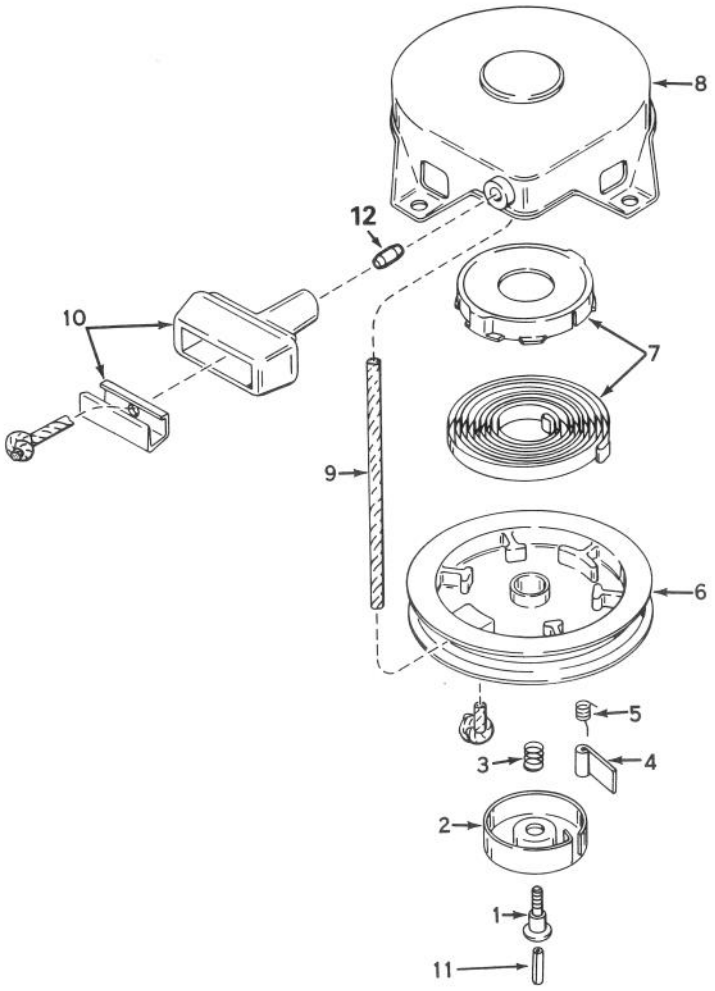


# REWIND STARTER NO. 590420A

| Ref. No. | Part No. | Description | No. Used |
|---|---|---|---|
| 1 | 590409A | Screw — Retainer | 1 |
| 2 | 590410 | Retainer — R.H. | 1 |
| 3 | 590411 | Spring — Brake | 1 |
| 4 | 590148 | Dog — Starter | 1 |
| 5 | 590412 | Spring — R.H. Dog | 1 |
| 6 | 590413A | Pulley | 1 |
| 7 | 590414 | Spring & Keeper Assy. | 1 |

| Ref. No. | Part No. | Description | No. Used |
|---|---|---|---|
| 8 | 590536 | Housing Assy. — Starter (Incl. #1) | 1 |
| 9 | 590535 | Rope — Starter | 1 |
| 10 | 590387 | Handle Assy. — Starter | 1 |
| 11 | 590459 | Pin — Centering | 1 |
| 12 | 34985 | Stop & Staple — Rope (Not used on all models) | 1 |

# PRODUCT CHANGES

In an effort to make improvements available to TORO owners as quickly as possible, minor changes are incorporated into Toro's products from time to time that do not become immediately shown in the Parts Catalog. If such a change apparently has been made in your unit, which is not reflected in your manual, see your TORO Distributor or his Authorized TORO Service Dealer for information and part numbers.

# IDENTIFICATION AND ORDERING

**MODEL AND SERIAL NUMBERS**

The Mower has two identification numbers: a model number and a serial number. The two numbers are stamped on a decal which is located on the mower housing between the rear wheels. In any correspondence concerning the mower, supply model and serial numbers to assure that correct information and replacement parts are obtained.

To order replacement parts from an Authorized TORO Service Dealer, supply the following information:

1. Model and serial numbers of the mower.
2. Part number, description, and quantity of part(s) desired.

**Note:** Do not order by reference number if a parts catalog is being used; use the PART NUMBER.

# The Toro Promise

*A ONE YEAR LIMITED WARRANTY*

*The Toro Company promises to repair your TORO Product if defective in materials or workmanship. The following time periods from the date of purchase apply:*

Residential Product ..... 1 Year
Residential Products Used Commercially ..... 45 Days

*The costs of parts and labor are included, but the customer pays the transportation costs. Just return any residential product to an Authorized TORO Service Dealer or TORO Distributor.*

Should you feel your TORO Product is defective and wish to rely on The Toro Promise, the following procedure is recommended:

1. Contact any Authorized TORO Service Dealer, TORO Master Service Dealer, or TORO Distributor (the Yellow Pages of your telephone directory is a good reference source).
2. He will either instruct you to return the product to him or recommend another Authorized TORO Service outlet which might be more convenient.
3. Bring the product along with your original sales slip, or other evidence of purchase date, to the service dealer.
4. The servicing dealer will inspect the unit, advise you whether the product is defective and, if so, make all repairs necessary to correct the defect without extra charge to you.

If for any reason you are dissatisfied with the dealer's analysis of the defect or the service performed, you may contact us.

Write:

TORO Consumer Service Department
8111 Lyndale Avenue South
Minneapolis, Minnesota 55420

The above remedy of product defects through repair by an Authorized TORO Service Dealer is the purchaser's sole remedy for any defect.

THERE IS NO OTHER EXPRESS WARRANTY. ALL IMPLIED WARRANTIES OF MERCHANTABILITY AND FITNESS FOR USE ARE LIMITED TO THE DURATION OF THE EXPRESS WARRANTY.

Some states do not allow limitations on how long an implied warranty lasts, so the above limitation may not apply to you.

This warranty applies only to parts or components which are defective and does not cover repairs necessary due to normal wear, misuse, accidents, or lack of proper maintenance. Regular, routine maintenance of the unit to keep it in proper operating condition is the responsibility of the owner.

All warranty repairs reimbursable under The Toro Promise must be performed by an Authorized TORO Service Dealer using Toro approved replacement parts.

Repairs or attemped repairs by anyone other than an Authorized TORO Service Account are not reimbursable under The Toro Promise. In addition, these unauthorized repair attempts may result in additional malfunctions, the correction of which is not covered by warranty.

THE TORO COMPANY IS NOT LIABLE FOR INDIRECT, INCIDENTAL OR CONSEQUENTIAL DAMAGES IN CONNECTION WITH THE USE OF THE PRODUCT INCLUDING ANY COST OR EXPENSE OF PROVIDING SUBSTITUTE EQUIPMENT OR SERVICE DURING PERIODS OF MALFUNCTION OR NON-USE.

Some states do not allow the exclusion or limitation of incidental or consequential damages, so the above limitation or exclusion may not apply to you.

This warranty gives you specific legal rights, and you may also have other rights which vary from state to state.

## COUNTRIES OTHER THAN THE UNITED STATES OR CANADA

Customers who have purchased TORO products exported from the United States or Canada should contact their TORO Distributor (Dealer) to obtain guarantee policies for your country, province or state. If for any reason you are dissatisfied with your Distributor's service or have difficulty obtaining guarantee information, contact the TORO importer. If all other remedies fail, you may contact us at The Toro Company.

Compliance with Radio Interference Regulations Certified.
Certifie Conforme au Reglement sur le Brouillage Radioelectrique.