FORM NO. 3312-438

TORO®

MODEL NO. 16775 — 4000001 & UP

PARTS CATALOG

21″ S.P. SIDE DISCHARGE

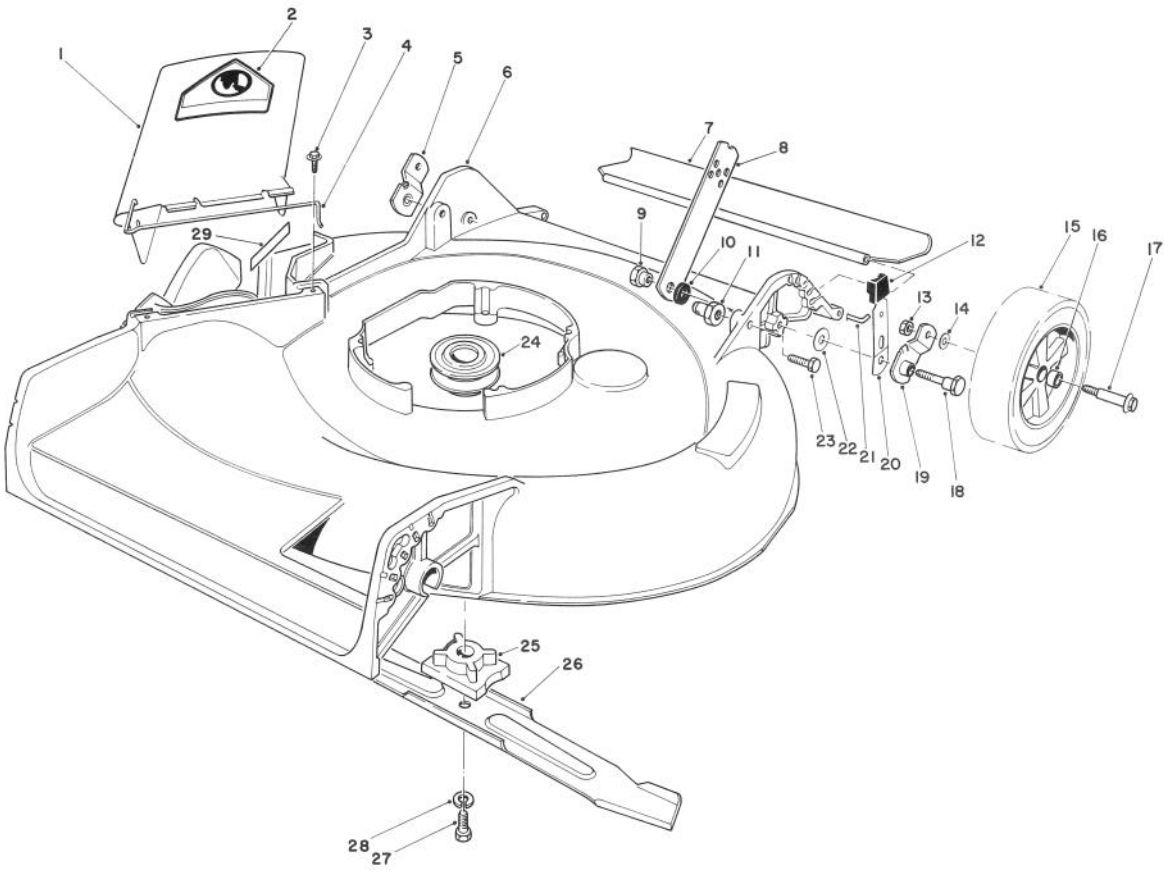

HOUSING ASSEMBLY

Ref. No.	Part No.	Description	No. Used
1	27-7817	Deflector (Incl. Ref. #2 & 4)	1
2	39-5770	Decal — Danger	1
3	46-6811	Screw & Washer Assembly	2
4	20-2640	Hinge — Spring	1
5	20-2130	Pivot Arm Assembly "B"	1
6	11-4639	Housing (Incl. Ref. #29)	1
7	22-4950	Shield — Rear	1
8	27-7080	Latch — Handle	2
9	27-6520	Nut — Shoulder	2
10	3-3287	Spacer — Handle Latch	2
11	12-2080	Nut — Shoulder	2
12	25-7740	Knob — Spring Arm	2
13	3296-6	Nut — Lock	2
14	40-1940	Washer — Wheel Bolt	2
15	27-6200	Wheel & Tire Assembly (Incl. Ref. #16)	2

Ref. No.	Part No.	Description	No. Used
16	27-6250	Bushing	4
17	27-6231	Bolt — Wheel	2
18	28-8880	Screw — Pivot	2
19	20-2140	Pivot Arm Assembly "A"	1
20	25-8000	Spring Arm	2
21	33-3201	Rod — Rear Shield	1
22	5-4460	Washer — Pivot	2
23	322-6	Screw — Cap Hex Hd.	2
24	23-0130	Pulley — Driver	1
25	49-7890	Retainer — Blade	1
26	20-2720	Blade 21"	1
27	26-0671	Screw — Blade Hex Hd.	1
28	3253-22	Washer — Lock	1
29	27-7350	Decal — Danger	1
*	11-8909	Loose Parts	1

*Not Illustrated

©The Toro Company — 1984

PRICE $1.00

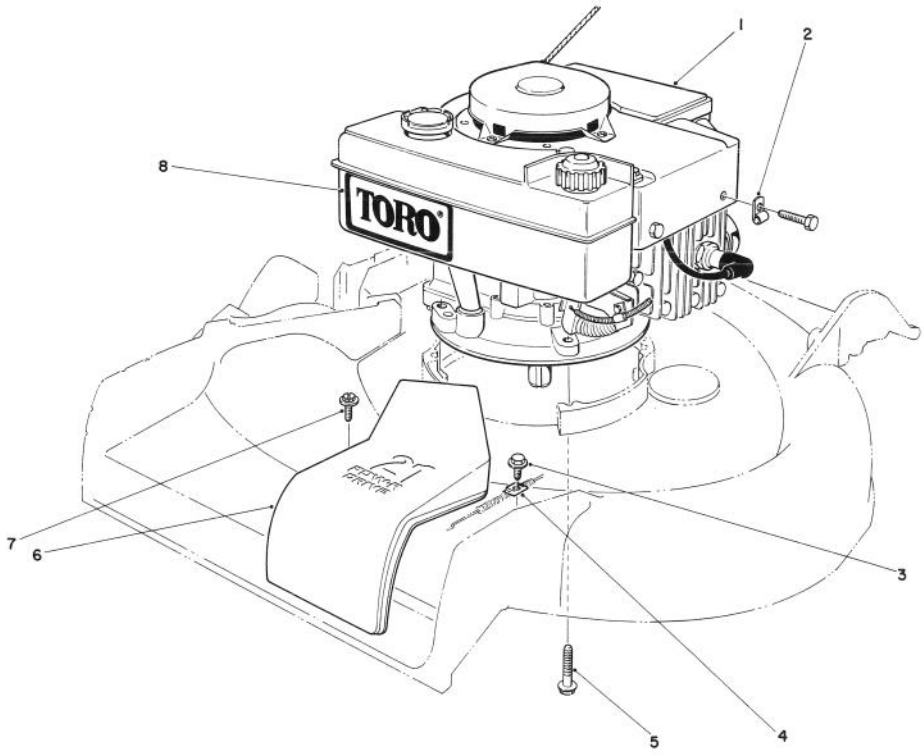

ENGINE ASSEMBLY

Ref. No.	Part No.	Description	No. Used
1	221-764	Engine	1
2	2412-63	Clamp — Casing	1
3	32144-11	Screw — Hex Flange Hd. Thread Forming	1
4	46-5610	Clamp — Cable	1

Ref. No.	Part No.	Description	No. Used
5	11-0580	Screw — Engine	3
6	46-4780	Cover — Belt	1
7	12-5450	Screw — Thread Forming	2
8	44-0510	Decal — Toro	1

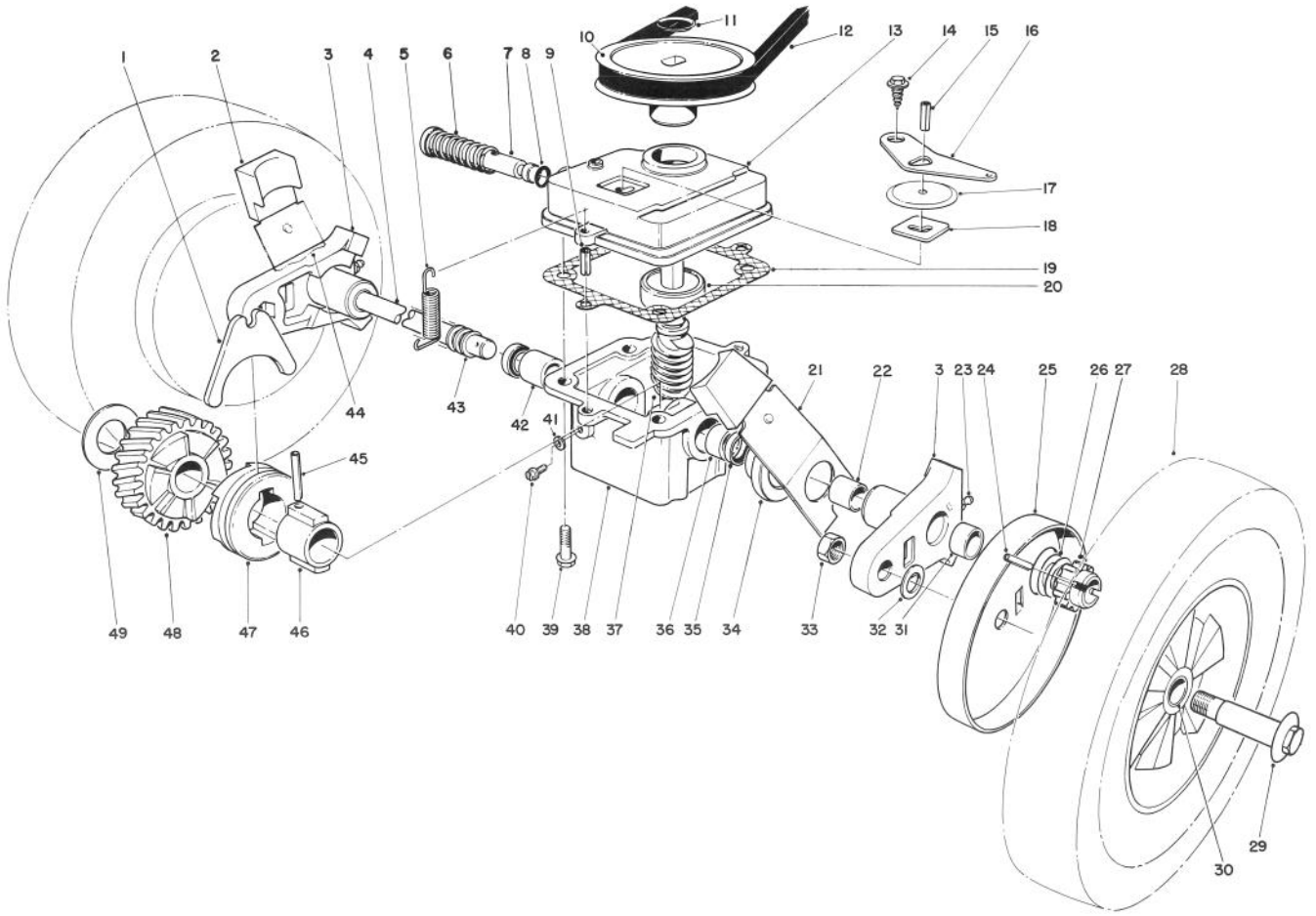

GEAR CASE ASSEMBLY

Ref. No.	Part No.	Description	No. Used
1	5-3247	Shifter Fork	1
2	25-7740	Knob Arm	2
3	38-2220	Pivot Arm (Incl. Ref. #22, 23 & 31)	2
4	37-9440	Drive Shaft	1
5	17-4490	Spring — Belt Tension	1
6	3-0731	Spring	1
7	46-8240	Shifter Rod	1
8	237-137	"O" — Ring	1
9	32121-1	Roll Pin	2
10	18-9760	Pulley	1
11	3290-346	Push On Retainer	1
12	5-4505	V-Belt	1
13	39-1100	Gear Case Cover	1
14	32140-64	Screw — Self Tapping	1
15	32121-23	Roll Pin	1
16	5-3252	Shifter Arm	1
17	3-2615	Transmission Dust Cover	1
18	3-0681	Latch Plate	1
19	36-1000	Gasket — Gear Case	1
20	47-7250	Ball Bearing	1
21	25-7930	Spring Arm Assembly L.H.	1
22	256-206	Bushing	2
23	302-56	Grease Fitting	2
24	32121-98	Pin — Coil	2
25	18-9820	Wheel Cover	2
26	46-6510	Thrust Washer	4
27	46-5930	Pinion Gear	2

Ref. No.	Part No.	Description	No. Used
28	11-1419	Wheel & Tire Assembly (Incl. Ref. #30)	2
29	27-6231	Wheel Bolt	2
30	27-6250	Bushing — Wheel	4
31	256-1	Bushing	2
32	40-1940	Washer — Wheel Bolt	2
33	3296-6	Nut	2
34	42-3520	End Cap	2
35	47-6730	Oil Seal	2
36	47-2890	Bushing	1
37	8-5679	Worm Shaft & Gear (Incl. Ref. #48)	1
38	8-0479	Gear Case (Incl. Ref. #35, 36 & 42)	1
39	11-9760	Screw	4
40	28-1550	Screw Nylon	1
41	46-9640	Gasket	1
42	47-2900	Bushing	1
43	24-7920	Cover Drive Shaft	1
44	25-7920	Spring Arm Assembly R.H.	1
45	32121-88	Coil Pin	1
46	3-0721	Sleeve	1
47	19-5660	Clutch Jaw	1
48		Helical Gear	1
49	3-0724	Thrust Washer	1
*	11-4149	Gear Case Assembly Complete	1
*	27-0490	Bearing & Shaft Tool	1
†*	36-9640	Metric Bearing Tool	1

*Not Illustrated

†Use With Part No. 27-0490, Bearing & Shaft Tool.

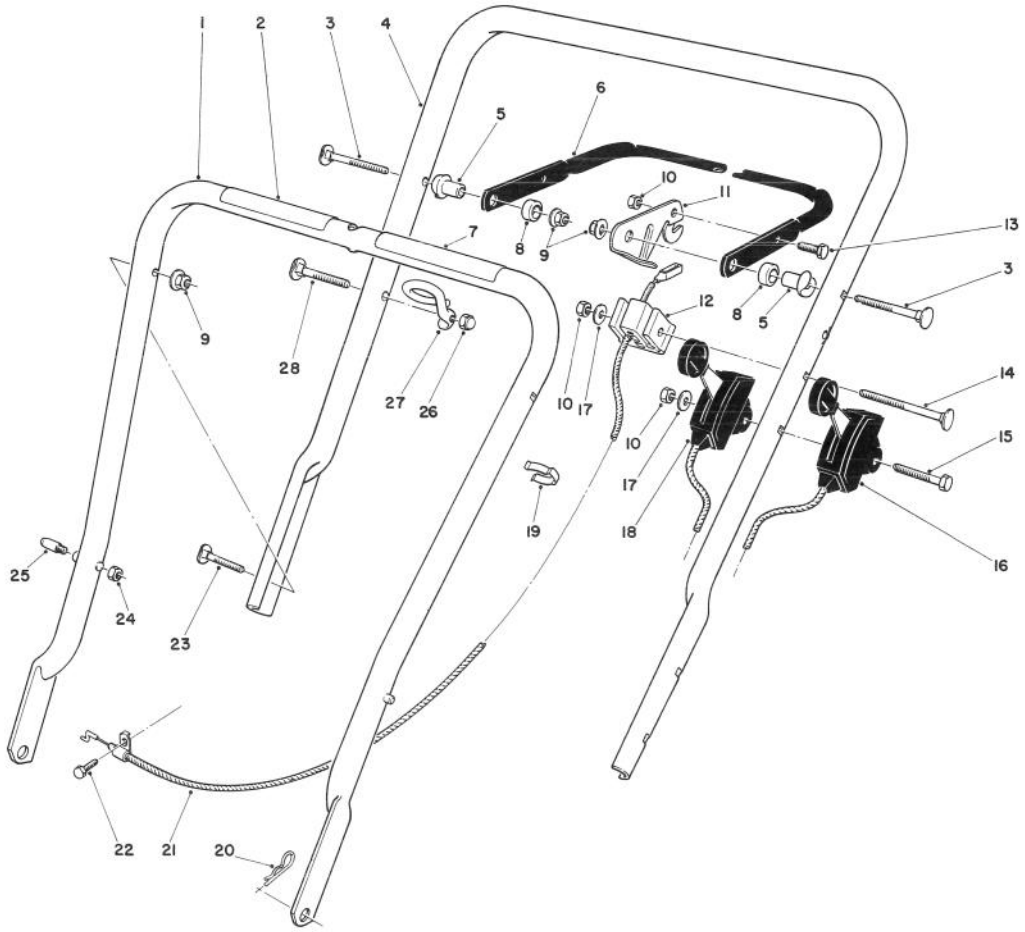

HANDLE ASSEMBLY

Ref. No.	Part No.	Description	No. Used
1	11-8889	Lower Handle Assembly (Incl. Ref. #2 & 7)	1
2	51-1590	Decal — Instructions	1
3	17-9421	Screw — Handle	2
4	49-4231	Handle — Upper	1
5	49-1630	Support — Spacer	2
6	49-4220	Bar — Control	1
7	49-1770	Decal — Danger	1
8	256-276	Spacer — Nylon	2
9	3296-58	Nut — Flange Lock	4
10	3296-42	Nut — Lock	3
11	46-7950	Lever — Control	1
12	46-6980	Support — Cable	1
13	321-3	Capscrew	1
14	46-6434	Screw — Handle	1
15	321-15	Capscrew	1
16	46-6030	Control — Traction (Bend Type #3) (Sheath Lg. 46") (Wire Lg. 1-1/4")	1

Ref. No.	Part No.	Description	No. Used
17	3256-22	Washer — Flat	2
18	46-6000	Control — Throttle (Bend Type #1) (Sheath Lg. 30") (Wire Lg. 2-1/8")	1
19	218-465	Clip — Cable (Double)	1
20	3290-255	Pin — Cotter Hair	2
21	46-8010	Cable — Brake	1
22	2210-250	Capscrew	1
23	17-9424	Screw — Handle	2
†24	3296-47	Nut — Lock	2
†25	49-2750	Pin — Handle	2
26	32111-7	Nut — Acorn	1
27	46-8080	Guide — Rope	1
28	46-6433	Screw — Handle	1

†Service Replacement Part

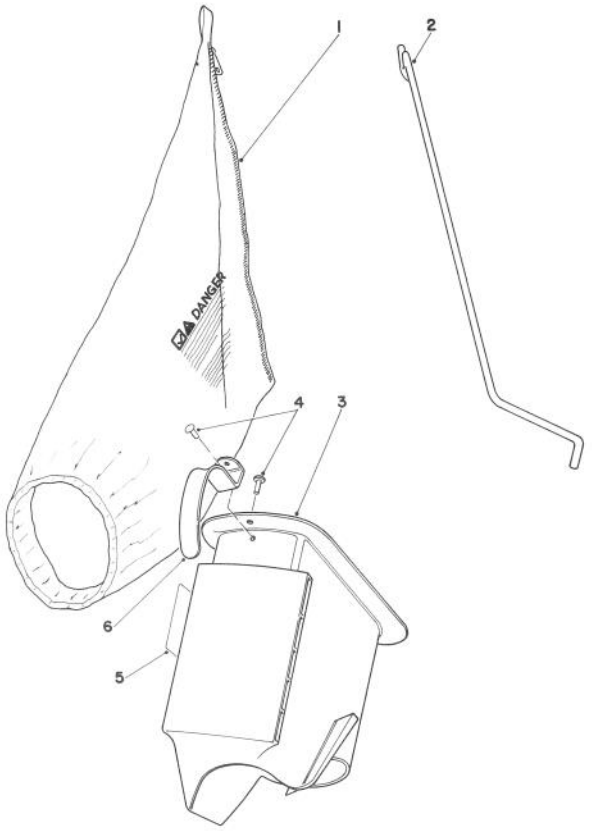

BAGGING KIT NO. 47-6510 (OPTIONAL)

Ref. No.	Part No.	Description	No. Used
1	6-0929	Grass Bag	1
2	47-5830	Bag Rod	1
3	6-1089	Grass Chute (Incl. Ref. #4 & 6)	1

Ref. No.	Part No.	Description	No. Used
4	3295-26	Rivet	2
5	36-5230	Decal — Bag Chute	1
6	20-4650	Handle Chute	1

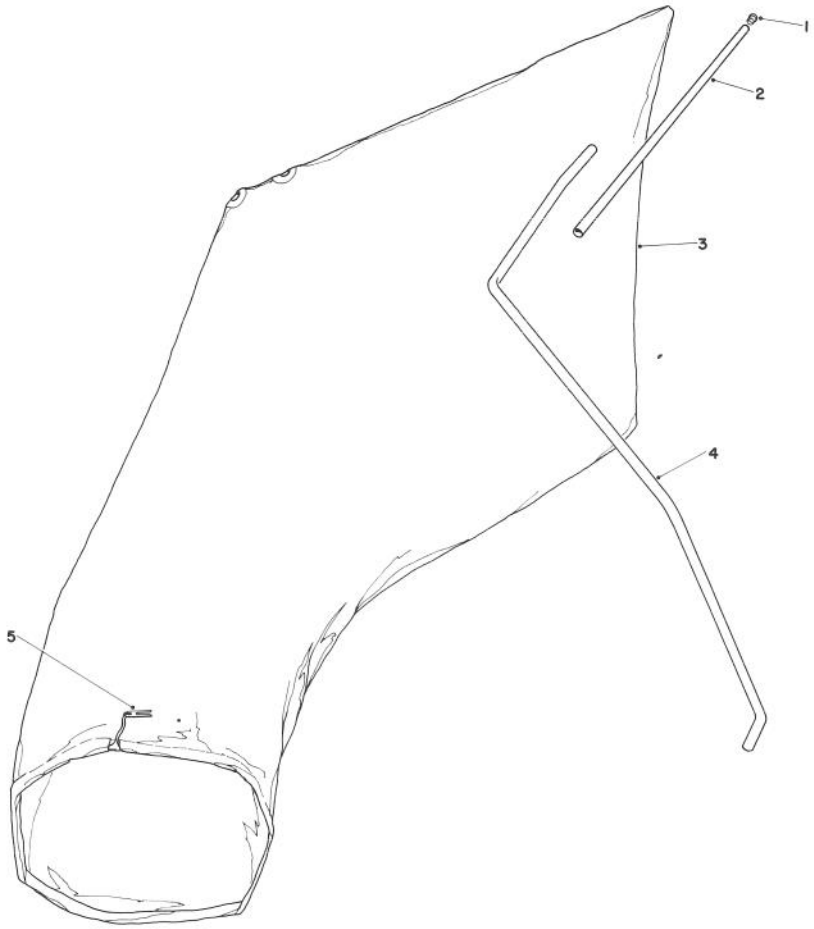

GIANT BAGGING KIT NO. 29-9750 (OPTIONAL)

Ref. No.	Part No.	Description	No. Used
1	2410-29	Cap	1
2	29-7000	Tube 25"	1
3	8-4719	Bag (Incl. Ref. #5)	1

Ref. No.	Part No.	Description	No. Used
4	22-4820	Hanger Rod	1
5	3-2781	Bag Cord Fasteners	1

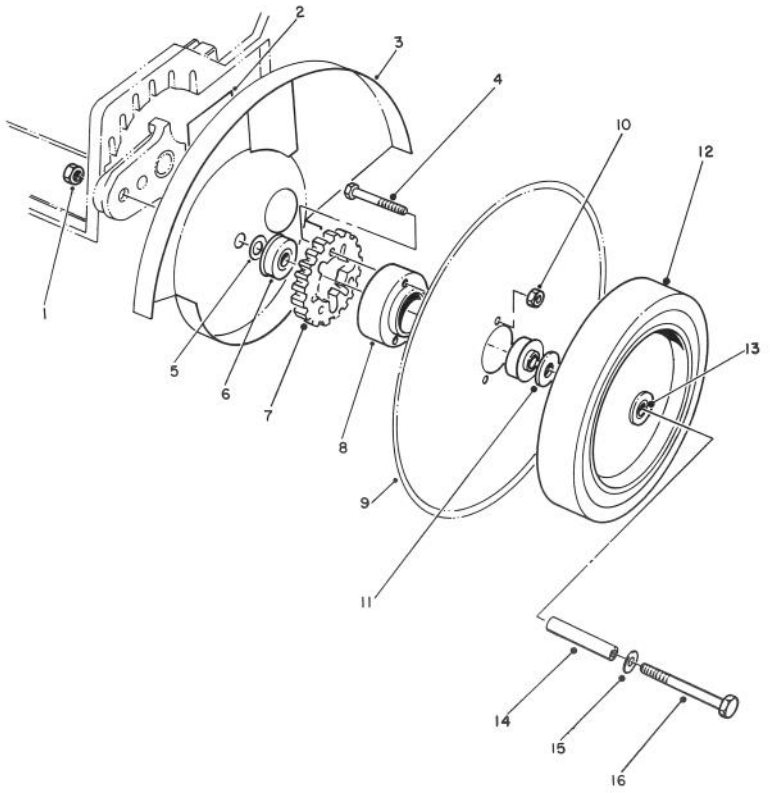

EDGER KIT NO. 59125 (OPTIONAL)

Ref. No.	Part No.	Description	No. Used
1	32146-6	Locknut	1
2	47-2210	Decal — Toro Edger	1
3	47-6150	Shield	1
4	3290-360	Hex Hd. Machine Screw	3
5	40-1940	Washer — Wheel Bolt	1
6	251-180	Bearing	2
7	49-2130	Gear — Wheel	1
8	47-6190	Spacer — Hub	1
9	47-6200	Blade — Edger 80 Tooth	1

Ref. No.	Part No.	Description	No. Used
10	32153-1	Locknut	3
11	29-8870	Spacer	1
12	34-0380	Wheel Assy. (Incl. Ref. #13)	1
13	27-6250	Bushing	1
14	47-6210	Spacer — Wheel Bolt	1
15	3256-3	Washer	1
16	3211-17	Capscrew	1
*	47-6180	Blade & Hub Assy. (Incl. Ref. #4, 6-10)	1

*Not Illustrated

ENGINE TECUMSEH MODEL NO. TVS90-43228D

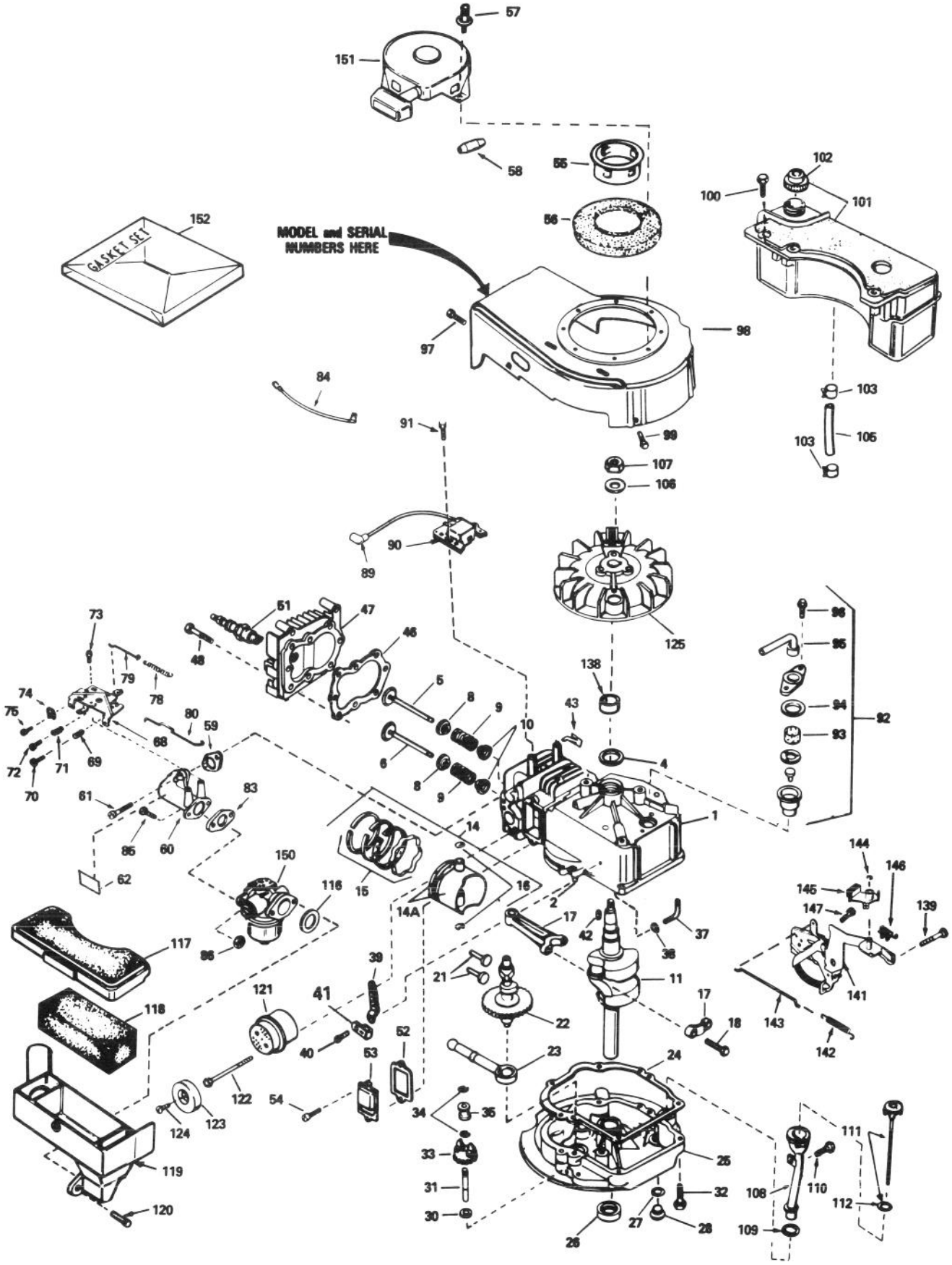

ENGINE TECUMSEH MODEL NO. TVS90-43228D

Ref. No.	Part No.	Description	No. Used
1	34975	Cylinder Assy. (Incl. #2 & 4)	1
2	26727	Pin — Dowel	2
4	32600	Seal — Oil	1
5	29314B	Valve — Intake (Std.) (Incl. #10)	1
5	29315C	Valve — Intake (1/32" Oversize) (Incl. #10)	1
6	29313C	Valve — Exhaust (Std.) (Incl. #10)	1
6	29315C	Valve — Exhaust (1/32" Oversize) (Incl. #10)	1
8	31671	Cap — Upper Valve Spring	2
9	31672	Spring — Valve	2
10	31673	Cap — Lower Valve Spring	2
11	34440	Crankshaft	1
14	34514	Piston — Pin & Ring Assy. (Std.) (Incl. #14A, 15 & 16)	1
14	34515	Piston — Pin & Ring Assy. (.010 Oversize) (Incl. #14A, 15 & 16)	1
14	34516	Piston — Pin & Ring Assy. (.020 Oversize) (Incl. #14A, 15 & 16)	1
14A	32538B	Piston & Pin Assy. (Std.) (Incl. #16)	1
14A	32548B	Piston & Pin Assy. (.010 Oversize) (Incl. #16)	1
14A	32549B	Piston & Pin Assy. (.020 Oversize) (Incl. #16)	1
15	28986	Ring Set — Piston (Std.)	1
15	28987	Ring Set — Piston (.010 Oversize)	1
15	28988	Ring Set — Piston (.020 Oversize)	1
16	20381	Ring — Piston Pin Retaining	2
17	30963B	Rod Assy. — Connecting (Incl. #18)	1
18	32610A	Screw — Connecting Rod	2
21	27241	Lifter — Valve	2
22	33553	Camshaft (Mechanical Compression Release)	1
23	29914	Pump Assy. — Oil	1
24	*26750A	Gasket — Mounting Flange	1
25	34831	Flange Assy. — Mounting (Incl. #26, 27, 28 & 31)	1
26	26208	Seal — Oil	1
27	*28833	Gasket — Oil Drain Plug	1
28	27244	Plug — Oil Drain	1
30	30590A	Washer — Flat	1
31	30574	Shaft — Mechanical Governor	1
32	650488	Screw — Hex Hd.	6
33	30591	Gear Assy. — Governor (Incl. #30)	1

Ref. No.	Part No.	Description	No. Used
34	29193	Ring — Retaining	2
35	30588A	Spool — Governor	1
37	30589	Rod — Governor (Incl. #38)	1
38	28277	Washer — Flat	1
39	31383A	Lever — Governor	1
40	650548	Screw — Hex Washer Hd.	1
41	31335	Clamp — Governor Lever	1
42	611004	Key — Flywheel (Solid State)	1
43	29443	Clip — Spring	1
46	*29953B	Gasket — Cylinder Head	1
47	34335	Head — Cylinder	1
48	6021A	Screw — Hex Flange Hd.	8
51	35078	Plug — Spark (Autolite 458, Champion J-19LM or Equivalent	1
52	*27234	Gasket — Breather	1
53	32755	Cover — Valve Spring	1
54	650128	Screw — Fil. Hd.	2
55	34449	Hub — Starter	1
56	35009	Screen — Starter	1
57		Pop Rivet (Can Be Purchased Locally)	4
58	34985	Rope Stop & Staple Assy.	1
59	*34690	Gasket — Intake	1
60	31384A	Pipe — Intake (Incl. #59)	1
61	650451	Screw — Hex Hd.	2
62	34144	Decal — Primer	1
68	33131A	Control Assy. — Remote Speed (Incl. #69-72)	1
69	33802	Spring — Compression	1
70	650777	Screw — Fil. Hd.	1
71	31342	Spring — Compression	1
72	650549	Screw — Fil. Hd.	1
73	30200	Screw — Hex Washer Hd. Self-Tap	2
74	27793	Clip — Conduit	1
75	28942	Screw — Hex Washer Hd.	1
78	31361	Spring — Governor	1
79	34337	Link — Governor Spring	1
80	34336	Link — Governor-To-Throttle	1
83	*26756	Gasket — Carburetor	1
84	34961	Wire — Ground	1
85	6201	Screw — Hex Hd.	2
86	29752	Nut & Lockwasher	2
89	610118	Cover — Spark Plug	1
90	34443A	Lamination & Coil Assy. (Solid State) (Incl. #89)	1
91	650814	Screw — Hex Hd.	2
92	34214A	Breather Assy. (Incl. #93-96)	1
93	33734	Element — Breather	1
94	33735	Gasket — Breather	1
95	33886	Tube — Breather	1

* Indicates parts included in Gasket Set, Ref. #152.

ENGINE TECUMSEH MODEL NO. TVS90-43228D (Cont.)

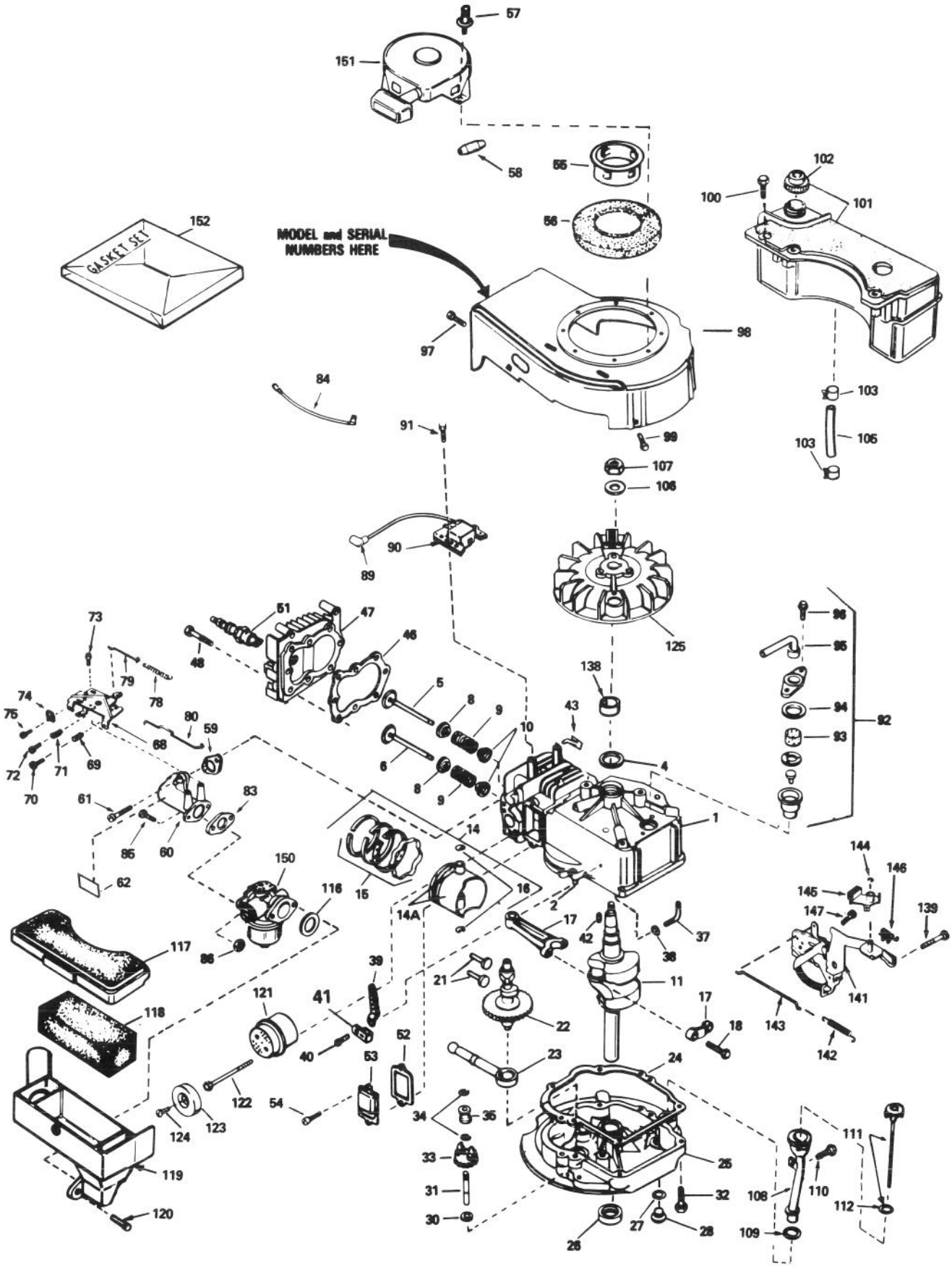

ENGINE TECUMSEH MODEL NO. TVS90-43228D (Cont.)

Ref. No.	Part No.	Description	No. Used
96	30200	Screw — Hex Washer Hd. Self-Tap	2
97	30200	Screw — Hex Washer Hd. Self-Tap	2
98	34936	Housing — Blower	1
99	650831	Screw — Hex Washer Hd. Powerlok Thread	2
100	28763	Screw — Hex Washer Hd.	3
101	34476	Tank Assy. — Fuel (Incl. #102)	1
102	33032	Cap — Fuel Tank	1
103	26460	Clamp — Fuel Line	2
105	34682	Line — Fuel	1
106	650815	Washer — Belleville	1
107	650816	Nut — Flywheel	1
108	34264	Tube — Oil Fill	1
109	34265	Gasket — Oil Fill Tube	1
110	650562	Screw — Hex Washer Hd.	1
111	34281	Dipstick — Oil (Incl. #112)	1
112	33590	"O" Ring	1
116	*34338	Gasket — Air Cleaner	1
117	34341	Cover — Air Cleaner	1
118	34340	Element — Air Cleaner	1
119	34858	Body — Air Cleaner	1
120	650806	Screw — Hex Washer Hd. Shoulder	2
121	27181B	Muffler (Incl. #122)	1
122	650795	Screw, Hex Hd.	2
123	32431	Cover — Muffler	1
124	650643	Screw — Pan Hd. Self-Tap	1
125	611046	Flywheel	1
138	34080	Spacer — Flywheel Key	1
139	650839	Screw — Hex Hd. Self-Tap	2
141	35015	Bracket Assy.	1
142	34965	Spring — Extension	1
143	34966	Link — Control	1
144	32309	Ring — Retaining	1
145	34968	Lever — Brake	1
146	610973	Terminal Assy.	1
147	650837	Screw — Hex Hd. E.T.	1
150	632098	Carburetor (Incl. #83)	1
151	590420A	Starter — Rewind	1
152	33238C	Gasket Set (Incl. Items Marked *)	1

* Indicates parts included in Gasket Set, Ref. #152.

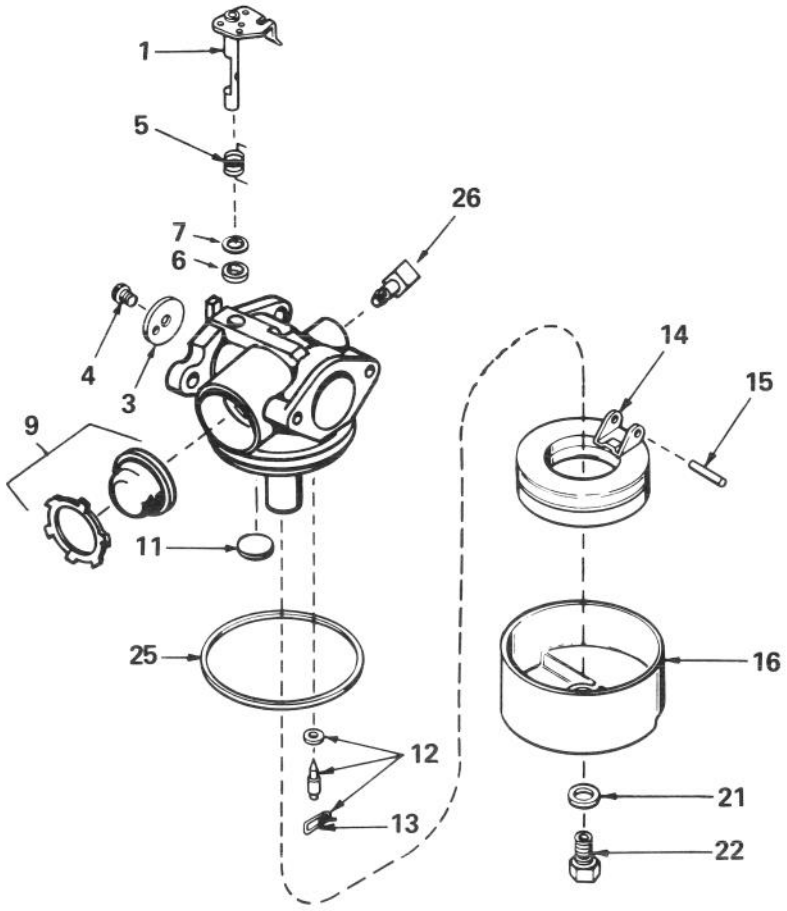

CARBURETOR NO. 632098

Ref. No.	Part No.	Description	No. Used
1	631615	Shaft & Lever Assy., Throttle	1
3	631616	Shutter — Throttle	1
4	650506	Screw — Throttle Shutter	1
5	631767	Spring — Throttle Return	1
6	631971	Seal — Dust	1
7	631184	Washer — Flat	1
9	632047	Primer Assembly	1
11	631027	Plug — Welch	1
12	631021	Inlet Needle — Seat & Clip Assy. (Incl. Ref. #13)	1

Ref. No.	Part No.	Description	No. Used
13	631022	Clip — Inlet Needle	1
14	632019	Float — Carburetor	1
15	631024	Shaft — Float	1
16	631700	Bowl — Float	1
21	631334	Gasket — Bowl-To-Body	1
22	631937	Nut — Float Bowl	1
25	631028	Gasket — Bowl-To-Body	1
26	631807	Fitting — Fuel Inlet	1

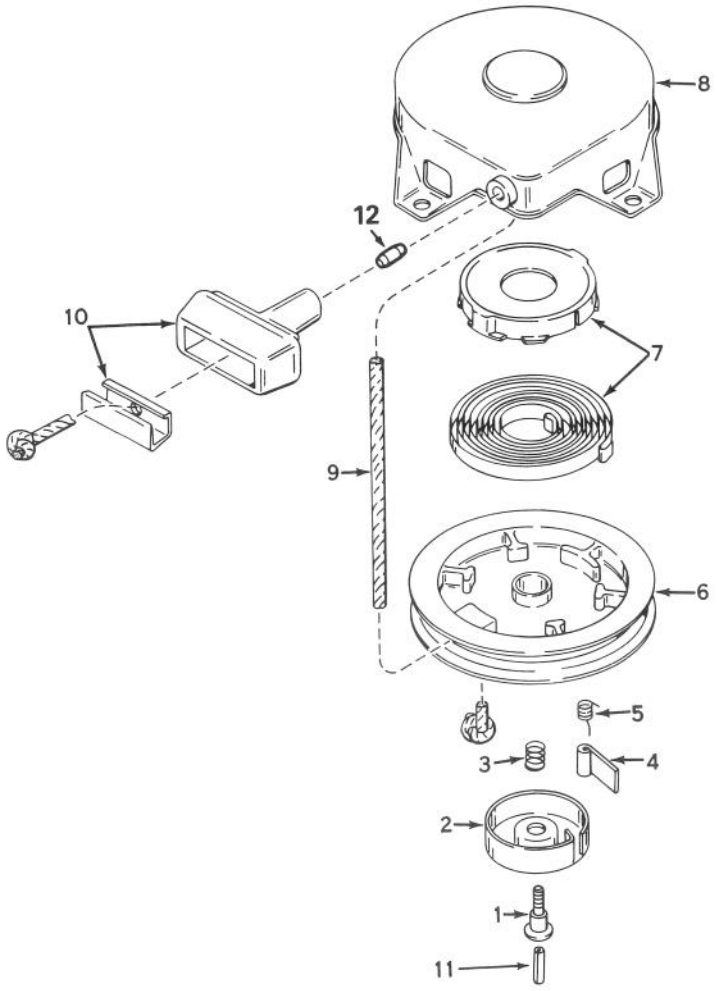

REWIND STARTER NO. 590420A

Ref. No.	Part No.	Description	No. Used
1	590409A	Screw — Retainer	1
2	590410	Retainer — R.H.	1
3	590411	Spring — Brake	1
4	590148	Dog — Starter	1
5	590412	Spring — R.H. Dog	1
6	590413A	Pulley	1
7	590414	Spring & Keeper Assy.	1

Ref. No.	Part No.	Description	No. Used
8	590536	Housing Assy. — Starter (Incl. #1)	1
9	590535	Rope — Starter	1
10	590387	Handle Assy. — Starter	1
11	590459	Pin — Centering	1
12	34985	Stop & Staple — Rope (Not used on all models)	1

PRODUCT CHANGES

In an effort to make improvements available to TORO owners as quickly as possible, minor changes are incorporated into Toro's products from time to time that do not become immediately shown in the Parts Catalog. If such a change apparently has been made in your unit, which is not reflected in your manual, see your TORO Distributor or his Authorized TORO Service Dealer for information and part numbers.

IDENTIFICATION AND ORDERING

MODEL AND SERIAL NUMBERS

The Mower has two identification numbers: a model number and a serial number. The two numbers are stamped on a decal which is located on the mower housing between the rear wheels. In any correspondence concerning the mower, supply model and serial numbers to assure that correct information and replacement parts are obtained.

To order replacement parts from an Authorized TORO Service Dealer, supply the following information:

1. Model and serial numbers of the mower.
2. Part number, description, and quantity of part(s) desired.

Note: Do not order by reference number if a parts catalog is being used; use the PART NUMBER.

The Toro Promise

A ONE YEAR LIMITED WARRANTY

The Toro Company promises to repair your TORO Product if defective in materials or workmanship. The following time periods from the date of purchase apply:

Residential Product ..... 1 Year
Residential Products Used Commercially ..... 45 Days

The costs of parts and labor are included, but the customer pays the transportation costs. Just return any residential product to an Authorized TORO Service Dealer or TORO Distributor.

Should you feel your TORO Product is defective and wish to rely on The Toro Promise, the following procedure is recommended:

1. Contact any Authorized TORO Service Dealer, TORO Master Service Dealer, or TORO Distributor (the Yellow Pages of your telephone directory is a good reference source).
2. He will either instruct you to return the product to him or recommend another Authorized TORO Service outlet which might be more convenient.
3. Bring the product along with your original sales slip, or other evidence of purchase date, to the service dealer.
4. The servicing dealer will inspect the unit, advise you whether the product is defective and, if so, make all repairs necessary to correct the defect without extra charge to you.

If for any reason you are dissatisfied with the dealer's analysis of the defect or the service performed, you may contact us.

Write:

TORO Consumer Service Department
8111 Lyndale Avenue South
Minneapolis, Minnesota 55420

The above remedy of product defects through repair by an Authorized TORO Service Dealer is the purchaser's sole remedy for any defect.

THERE IS NO OTHER EXPRESS WARRANTY. ALL IMPLIED WARRANTIES OF MERCHANTABILITY AND FITNESS FOR USE ARE LIMITED TO THE DURATION OF THE EXPRESS WARRANTY.

Some states do not allow limitations on how long an implied warranty lasts, so the above limitation may not apply to you.

This warranty applies only to parts or components which are defective and does not cover repairs necessary due to normal wear, misuse, accidents, or lack of proper maintenance. Regular, routine maintenance of the unit to keep it in proper operating condition is the responsibility of the owner.

All warranty repairs reimbursable under The Toro Promise must be performed by an Authorized TORO Service Dealer using Toro approved replacement parts.

Repairs or attemped repairs by anyone other than an Authorized TORO Service Account are not reimbursable under The Toro Promise. In addition, these unauthorized repair attempts may result in additional malfunctions, the correction of which is not covered by warranty.

THE TORO COMPANY IS NOT LIABLE FOR INDIRECT, INCIDENTAL OR CONSEQUENTIAL DAMAGES IN CONNECTION WITH THE USE OF THE PRODUCT INCLUDING ANY COST OR EXPENSE OF PROVIDING SUBSTITUTE EQUIPMENT OR SERVICE DURING PERIODS OF MALFUNCTION OR NON-USE.

Some states do not allow the exclusion or limitation of incidental or consequential damages, so the above limitation or exclusion may not apply to you.

This warranty gives you specific legal rights, and you may also have other rights which vary from state to state.

COUNTRIES OTHER THAN THE UNITED STATES OR CANADA

Customers who have purchased TORO products exported from the United States or Canada should contact their TORO Distributor (Dealer) to obtain guarantee policies for your country, province or state. If for any reason you are dissatisfied with your Distributor's service or have difficulty obtaining guarantee information, contact the TORO importer. If all other remedies fail, you may contact us at The Toro Company.

Compliance with Radio Interference Regulations Certified.
Certifie Conforme au Reglement sur le Brouillage Radioelectrique.

MAINTENANCE RECORD

Date	Hours Used	Oil Change	Air Cleaner Service	Lubrication	Winter Storage	Spring Service	Spark Plug Gap

MAINTENANCE RECORD

Date	Hours Used	Oil Change	Air Cleaner Service	Lubrication	Winter Storage	Spring Service	Spark Plug Gap